DocuSign Envelope ID: BCB8FF2A-083E-48A1-8BCC-2D048B980E67

SIGN PUNCHING, STRINGER AND SUPPORT LOCATION DETAILS - ROUTE MARKER SIGNS

D-754-63

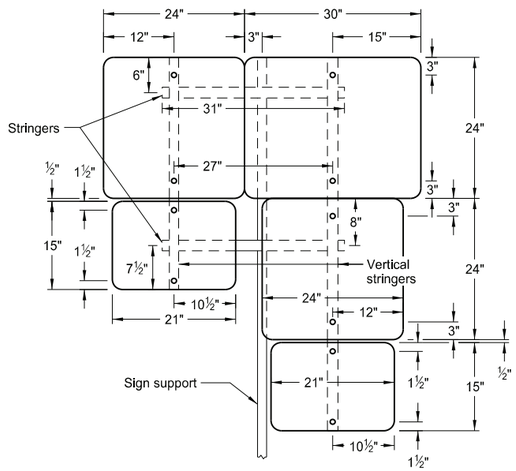

1 Post

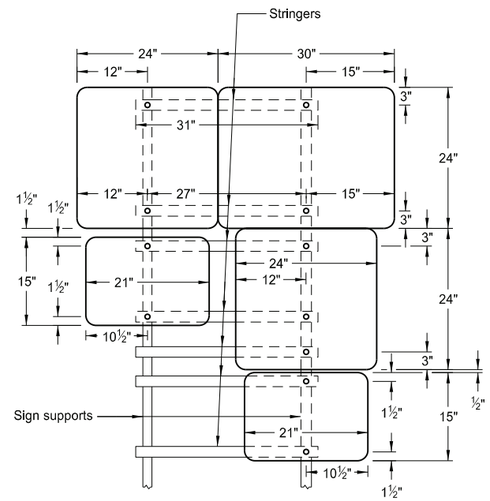

2 Posts

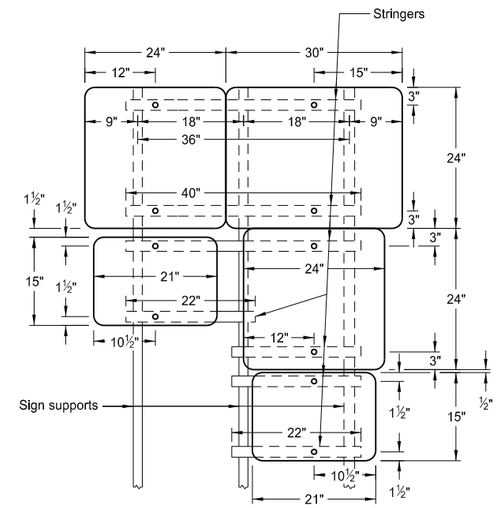

3 Posts

ASSEMBLY NO. 411

Notes:

1. Use 0.100 inch minimum thickness sign backing material.
2. Use 1½"x1½" perforated square tube stringer.
3. Punch holes round for ⅜" bolt.

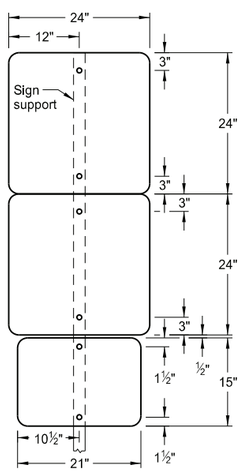

1 Post

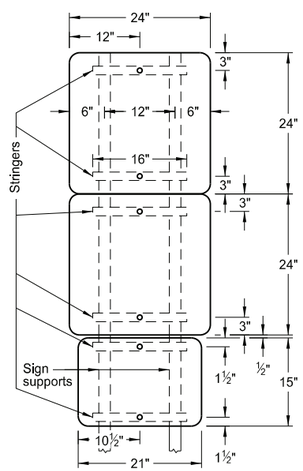

2 Posts

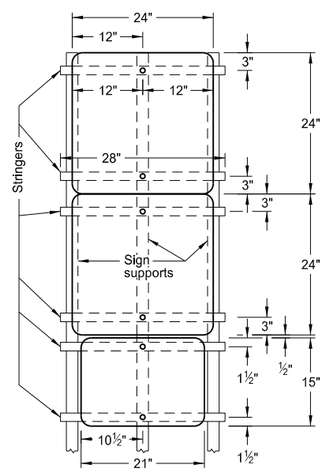

3 Posts

ASSEMBLY NO. 412

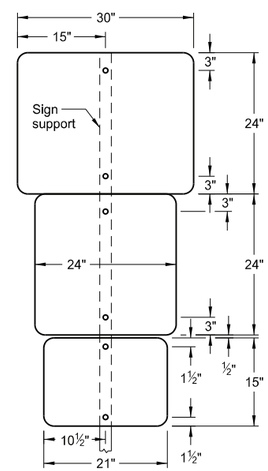

1 Post

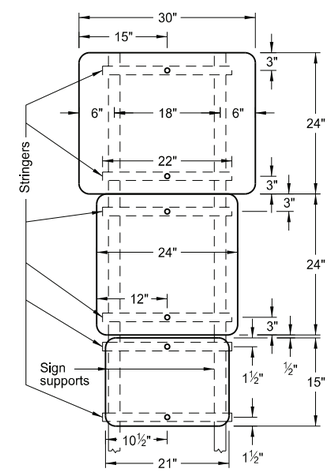

2 Posts

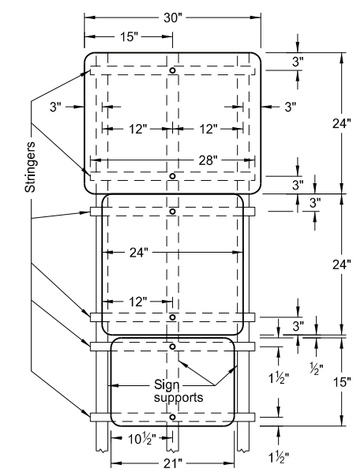

3 Posts

ASSEMBLY NO. 413

NORTH DAKOTA DEPARTMENT OF TRANSPORTATION	
8-22-12	
REVISIONS	
DATE	CHANGE
8-30-18	Updated notes to active voice.
9-04-19	New Design Engineer PE Stamp.
8-07-24	Electronic Stamp/Signature.

KIRK J. HOFF
REGISTERED
PROFESSIONAL
PE-4683
ENGINEER
NORTH DAKOTA

08/07/24