LANE CLOSURES ON URBAN STREETS LAYOUTS

D-704-25

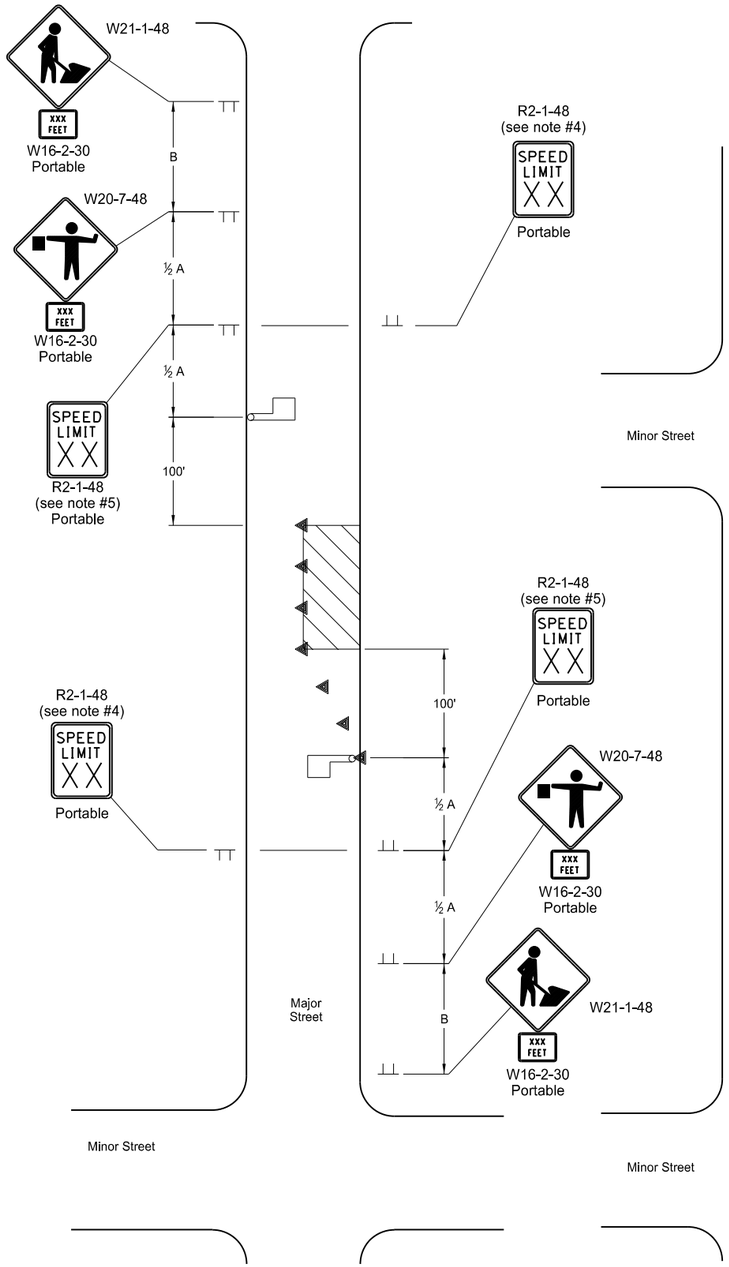

TYPE V
LANE CLOSURE ON URBAN STREET

When portion of roadway is closed to traffic only during daylight hours (mid block location).

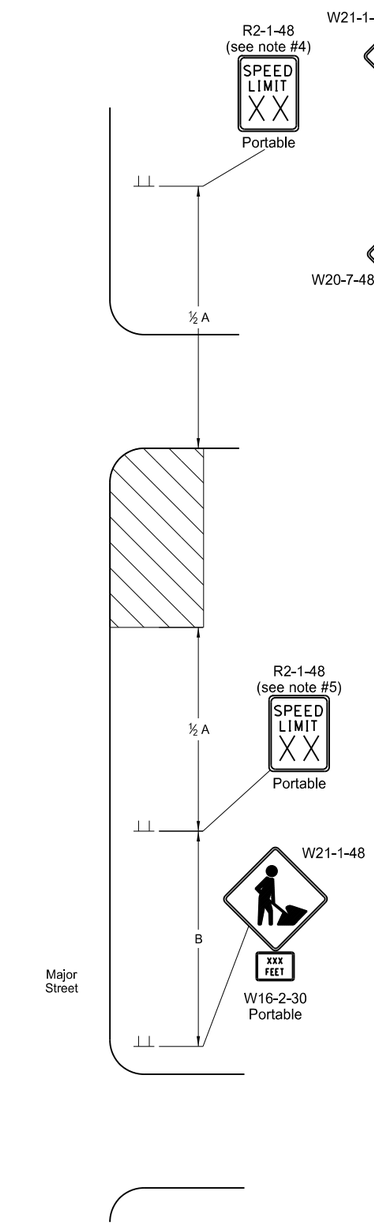

TYPE W
WORK BEYOND CURB ON URBAN STREET

When work area is outside of driving lane and no closure is necessary

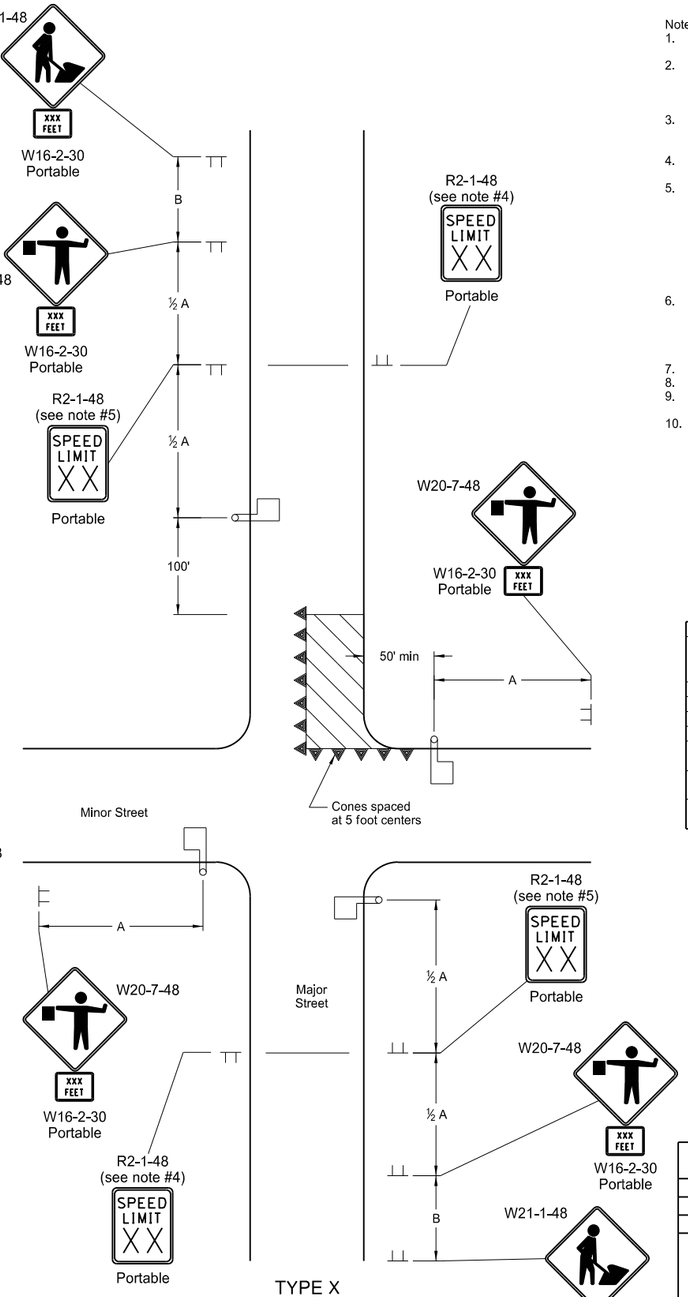

TYPE X
LANE CLOSURE NEAR INTERSECTION ON URBAN STREET

When portion of roadway is closed to traffic only during daylight hours (end block location).

Notes

1. For Type V: The contractor will be allowed to work only on one side of the roadway at a time so as not to block off any more than one lane of traffic.
2. When parking is present, the signs shall be placed so they are entirely visible above the parked vehicles or placed at the edge of the parking area so they are visible to oncoming traffic. These signs may be skid mounted when placed on the roadway surface.
3. Delineator cones used for tapering traffic shall be placed at 3 equal spaces. Delineator cones for tangents shall be spaced at dimension "S". "S" = the numerical value of speed limit.
4. The speed limit shall be re-established. The exact speed limit shall be determined in the field, dependent on location and conditions.
5. The reduced speed limit shall be determined dependent on the in place speed limit before construction. The speed limit reduction should not exceed 10 mph below the existing speed limit, unless the design speed of the work zone feature has been reduced below the 10 mph. In this case, the speed limit reduction shall not exceed 30 MPH. Where speed limits are to be reduced more than 30 MPH, a second speed limit sign shall be installed with the desired speed reduction but shall not exceed 30 MPH. The second speed limit sign shall be placed at ½ B.
6. When warning signs are used in urban areas and the signs are not portable, flags shall be installed. The flags shall be 24 inches square, mounted perpendicular to the edges of the diamond sign, and at such a distance above the edge so that when the flag is limp it will not touch the sign. Rural areas will not require flags.
7. Existing speed limit signs within a reduced speed zone shall be covered.
8. Where necessary, safe speed to be determined by the Engineer.
9. The contractor has the option of using portable sign supports in lieu of post mounted signs in accordance with the NDDOT Standard Specifications.
10. Urban projects do not need the G20-55-96 and R2-1a-24 signs.

ADVANCE WARNING SIGN SPACING

Road Type	Distance Between Signs Min. (ft)		
	A	B	C
Urban - Low Speed (30 mph or less)	150	150	150
Urban - Low Speed (over 30 to 40 mph)	280	280	280
Urban - High Speed (over 40 mph to 50 mph)	360	360	360
Rural - High Speed (over 50 mph to 65 mph)	720	720	720
Urban Expressway and Freeway (55 mph to 60 mph)	850	1350	2200
Rural Expressway and Freeway (70 mph to 75 mph)	1000	1500	2640
Interstate/4-Lane Divided (Maintenance and Surveying)	750	1000	1500

KEY

Sign	Work area
Cones	Flagger

NORTH DAKOTA
DEPARTMENT OF TRANSPORTATION

9-27-13

REVISIONS

DATE	CHANGE

This document was originally issued and sealed by Roger Weigel Registration Number PE- 2930, on 09/27/13 and the original document is stored at the North Dakota Department of Transportation