PIPE SUPPORT AND SIGN MOUNTING DETAILS

D-754-7

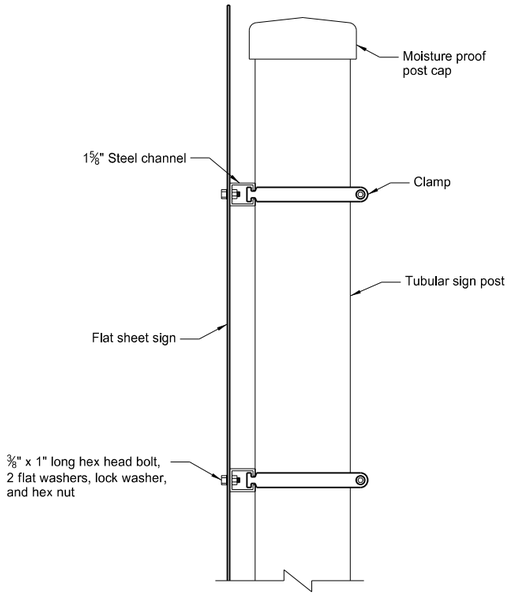

Side View

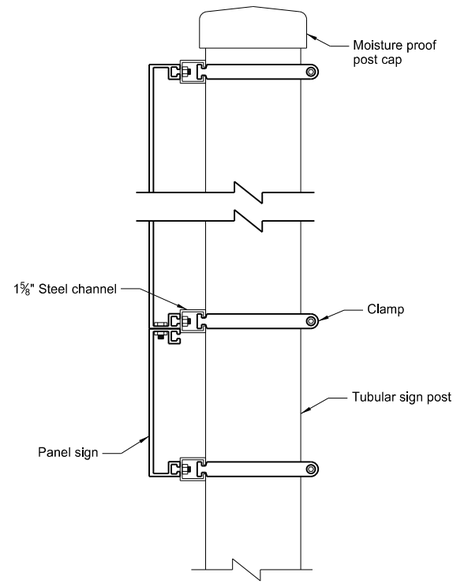

Side View

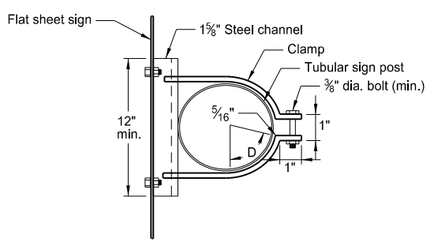

Top View

Flat Sheet Sign Clamp Mounting Details

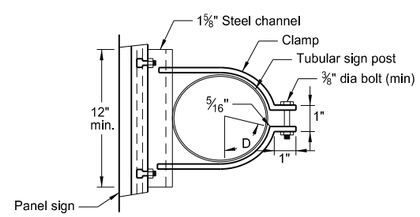

Top View

Panel Sign Clamp Mounting Details

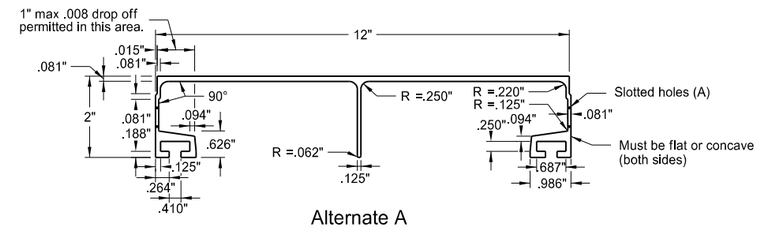

Alternate A
12" Extruded Panel

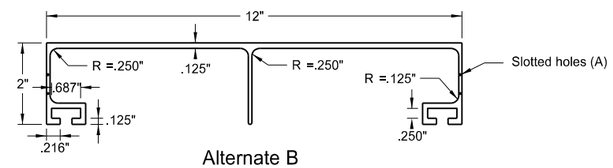

Alternate B
12" Extruded Panel

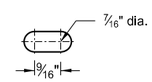

Slotted Hole Detail

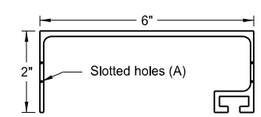

6" Extruded Panel

Aluminum Panel Details

(A) Punch slotted holes in aluminum panels at 1'-0" on center, space from end as listed below:

12" even length panels	4'-0" etc.
9" odd + 6" length panels	5'-6" etc.
6" odd length panels	5'-0" etc.
3" even + 6" length panels	4'-6" etc.

Wall thickness = .078" unless specified otherwise.
All inside and outside corners = .031" radius unless specified otherwise.

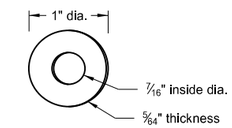

Flat Washer Detail

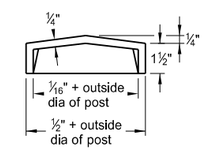

Side View

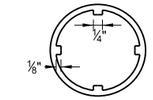

Top View

Post Cap Detail

Furnish post caps for all steel or aluminum posts or weld a ⅛" plate all around.

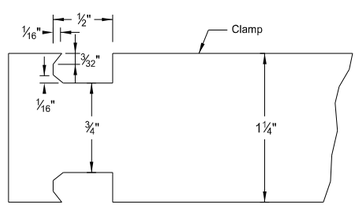

Clamp Detail

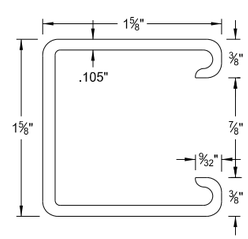

Steel Channel Detail

Post Size dia	Clamp Gauge min
3½" to 5"	11
6" to 12"	10

Post Size dia (in)	D (in)
3½	3
4	3 3/16
5	5⅛
6	7 7/16
8	13 1/16
10	20¾
12	29⅝

NORTH DAKOTA
DEPARTMENT OF TRANSPORTATION

2-21-14

REVISIONS

DATE	CHANGE
8-30-18	Updated to active voice, defined bolt & washers for fastenlng sign.
8-29-19	New Design Engineer PE Stamp.

This document was originally issued and sealed by Kirk J Hoff, Registration Number PE-4683, on 8/29/19 and the original document is stored at the North Dakota Department of Transportation