Appendix III-14 A
Page 1

Figure 1 Standard Barrier (Code G)

Figure 2 Example of a Parallel Embankment Slope Design

Figure 3 Breakaway Support Stub Height Measurement

Figure 4 Wind and Impact Loads

Figure 5 Impact Performance

Figure 6 Median Cross Slope Design

Figure 7 Encroachments Per Mile Per Year

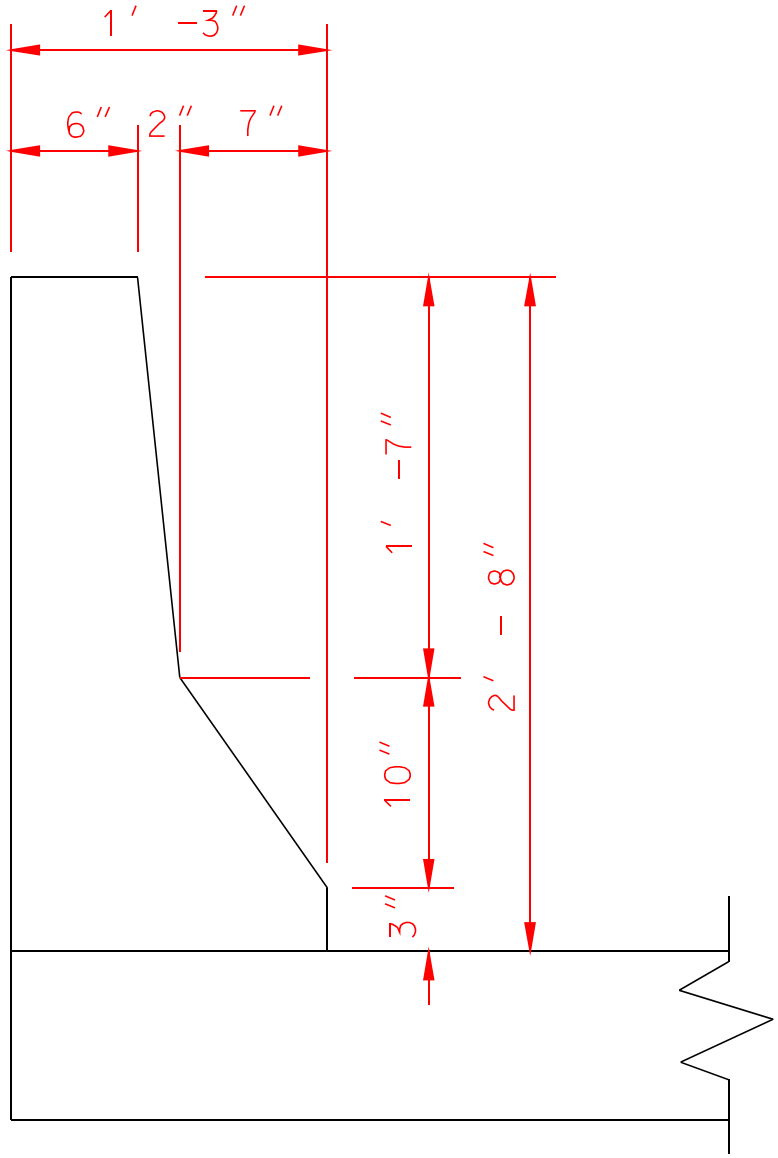

STANDARD BARRIER (CODE G)

FIGURE 1

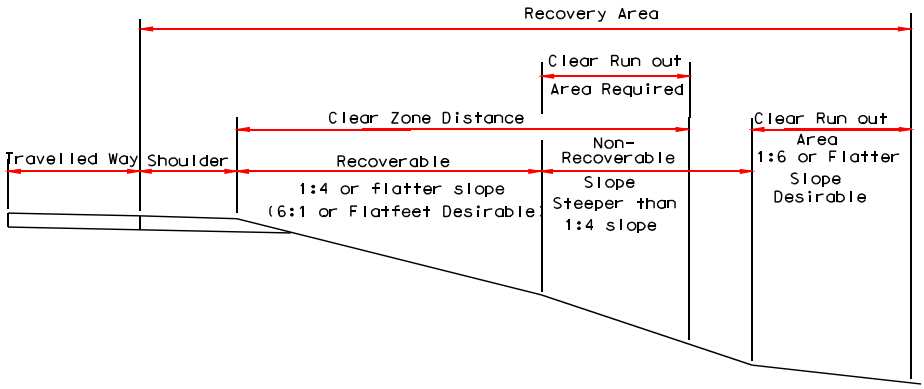

Figure 2. Example of a Parallel Embankment Slope Design.
This figure illustrates a recoverable slope followed by a non-recoverable slope. Since the clear zone distance extends onto a non-recoverable slope, the portion of the clear zone distance on such a slope should be provided provided beyond the non- recoverable slope if practical. This run out area would than be included in the total recovery area. The clear run out area may be reduced in width based on existing conditions or site investigations. Such a viable slope typical section is often used as a compromise between roadside safety and economics. By providing a reactively flat recovery area immediately adjacent to the roadway, most errant motorists can recover before reaching the steeper slope beyond. The slope break may be liberally rounded so an encroaching vehicle does not become airborne. It is suggested that the steep slope be made as smooth as practical and rounded at the bottom.

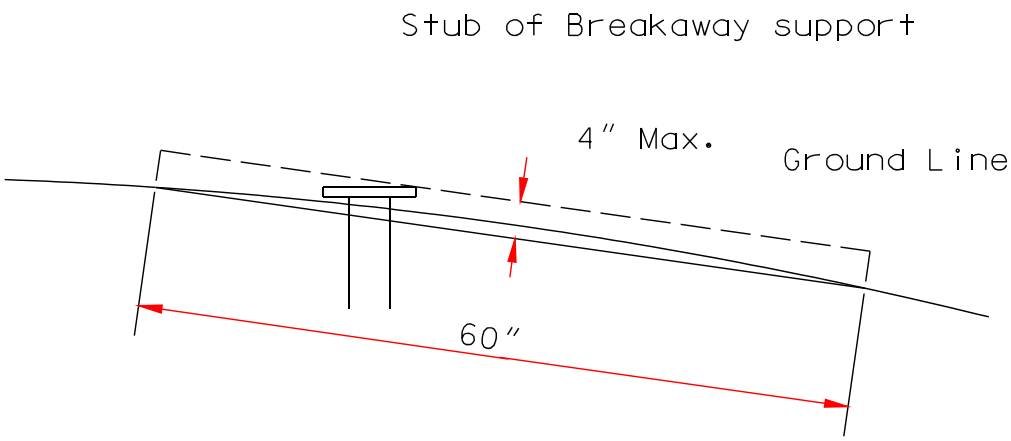

Figure 3. Breakaway Support Stub Height Measurement

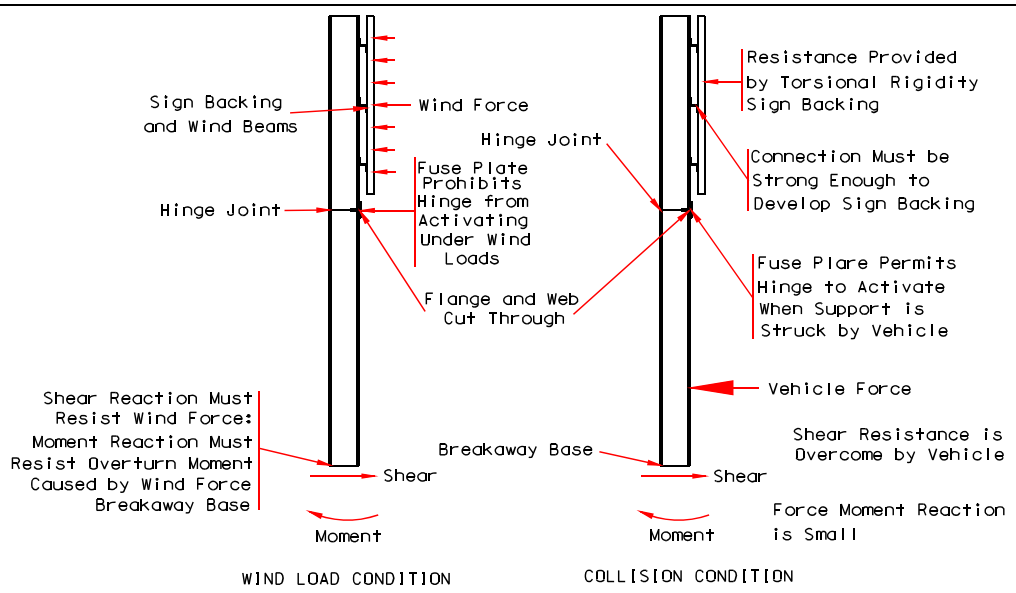

Figure 4 Wind and Impact Loads

Figure 5 Impact Performance

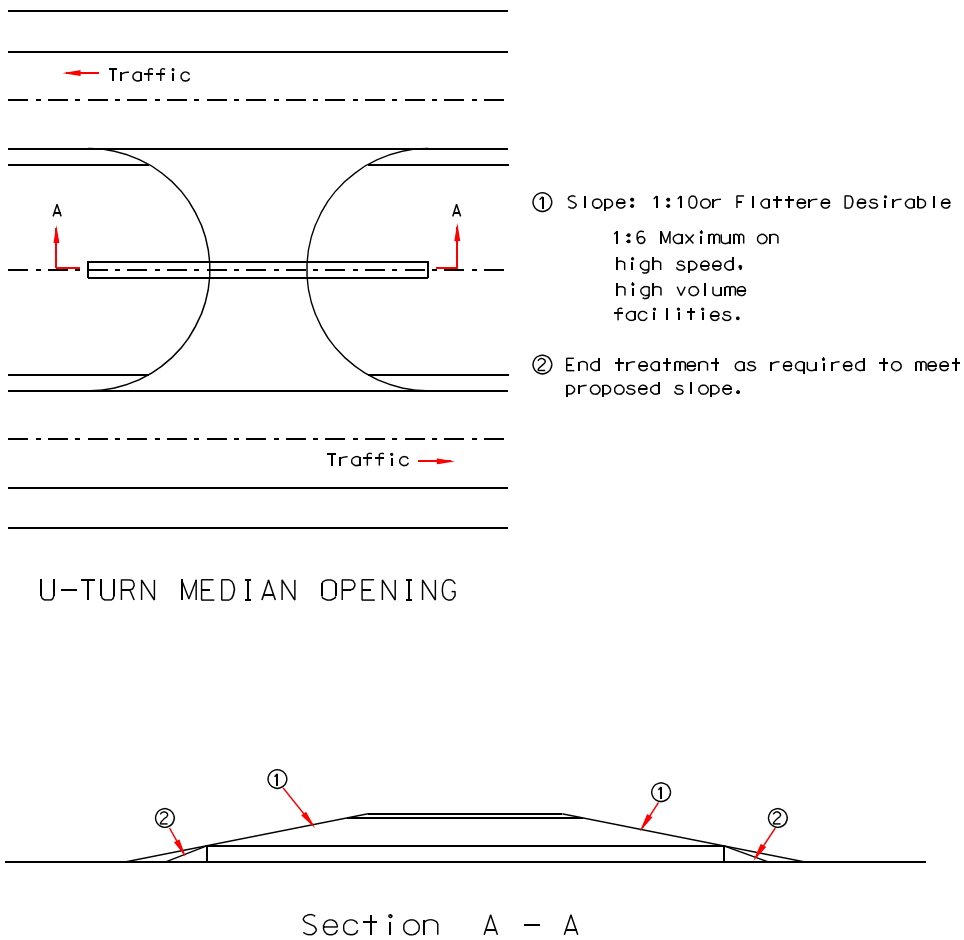

Figure 6 Median Cross Slope Design. Use od the flattest posible median cross slope on high speed highways, parricularly within the appropriate clear zone, can provide an improved roadside. Safety treatment of culverts as discussed in embankment (cross slope) may further enhance the improvement.

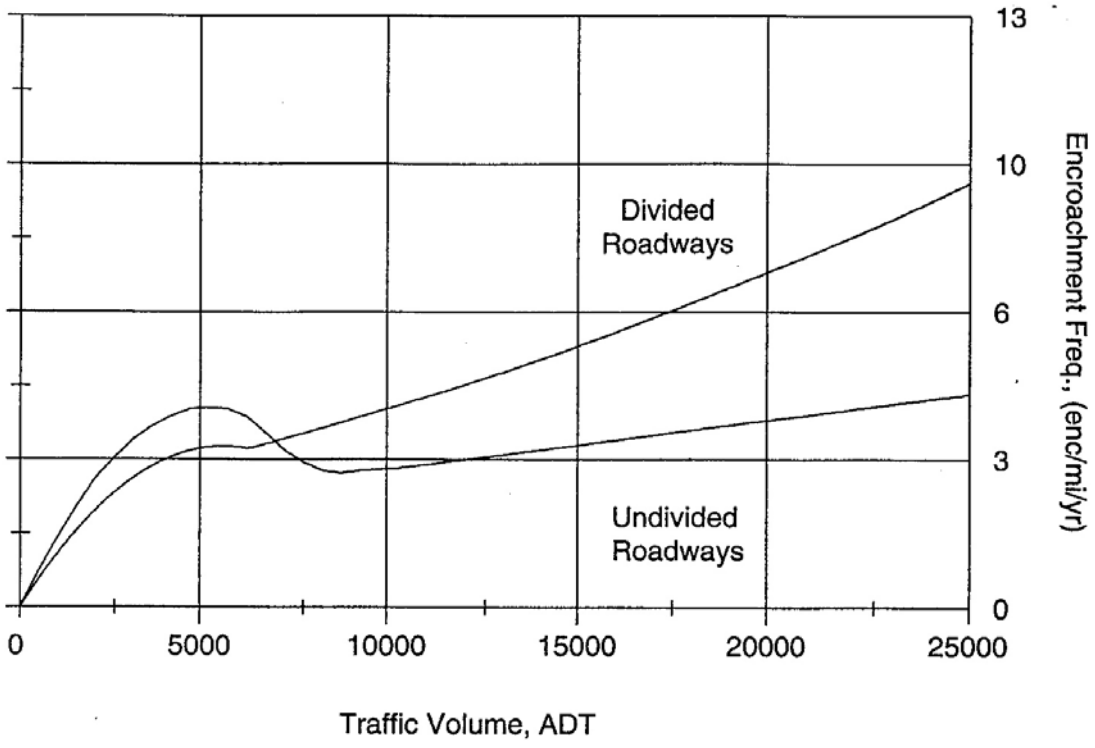
13
10
6
3
0
Encroachment Freq., (enc/mi/yr)
Divided
Roadways
Undivided
Roadways
0
5000
10000
15000
20000
25000
Traffic Volume, ADT

Figure 7