V–02.01 General

1. Primary guidelines for hydraulic modeling of structures are those set forth in this manual, in the Code of Federal Regulations (23 CFR 650), and in Article 89-14 of North Dakota Administrative Code.

2. A hydraulic review is required for structural rehabilitation projects if there is significant scour, unstable channels, or a history of flow-related problems.

3. A hydraulic report shall be prepared for all new structures.

4. Three alternatives will typically be required for hydraulic analysis and cost comparison purposes when new box culverts are modeled. For new bridges, two to three alternatives will typically be considered. In some cases, due to channel or roadway geometry, only one alternative may be appropriate. In such cases, analysis of impractical alternatives is not necessary, and only one alternative may be considered. The Bridge Division should be contacted when site/hydraulic conditions limit the possible alternatives to less than three.

5. The 2, 10, 25, 50, 100, 200 and 500-year discharges shall be determined and published in every "Hydraulic Analysis and Structure Selection Report." Hydraulic analyses shall compare modeled upstream water surface elevations for the proposed structure with those of the existing structure at the design frequency discharge, and at the 100- and 500-year discharges.

6. Water surface profiles for existing and proposed conditions shall be included in all hydraulic reports for new bridges or box culverts on new alignments, and for all structures (either bridges or box culverts) which replace existing bridges.

7. For box culverts, and bridges having lengths less than 500 feet, the channel survey and hydraulic model should extend from approximately 1000 feet downstream to approximately 1000 feet upstream from the crossing. Cross sections shall be obtained at approximately 1000 feet upstream, approx. 500 feet upstream, approx. 500 feet downstream, and approx. 1000 feet downstream from the structure. Cross sections shall be obtained at both the upstream and downstream openings at the structure. Additional cross sections shall be obtained as necessary to allow for adequate comparison of water surface profiles, particularly on the upstream side of the structure, and additional cross sections should be obtained as necessary to allow for accurate determination of ineffective flow areas due to expansion and contraction. Cross sections should also be obtained at locations where flow changes occur (confluences, branches, etc.) and where changes in channel width will affect flow conditions, such as at constricted sections.

   A channel profile following the thalweg of the channel for the entire length of the studied reach shall be obtained.

At major river crossings where bridges are approximately 500 feet in length or longer, and/or where a broad flood plain affects expansion and contraction through the crossing, more extensive survey will be required. Additional guidance on selection of cross section locations can be found in the US Army Corps of Engineers (USACE) HEC-RAS Hydraulic Reference Manual.

Cross sections should be taken at right angles to flow in both the channel and floodplain. Where channel flow is not parallel with the floodplain flow, the survey line should be pivoted to extend across the respective sections at right angles. An example aerial image with survey cross sections is provided below to illustrate this practice.

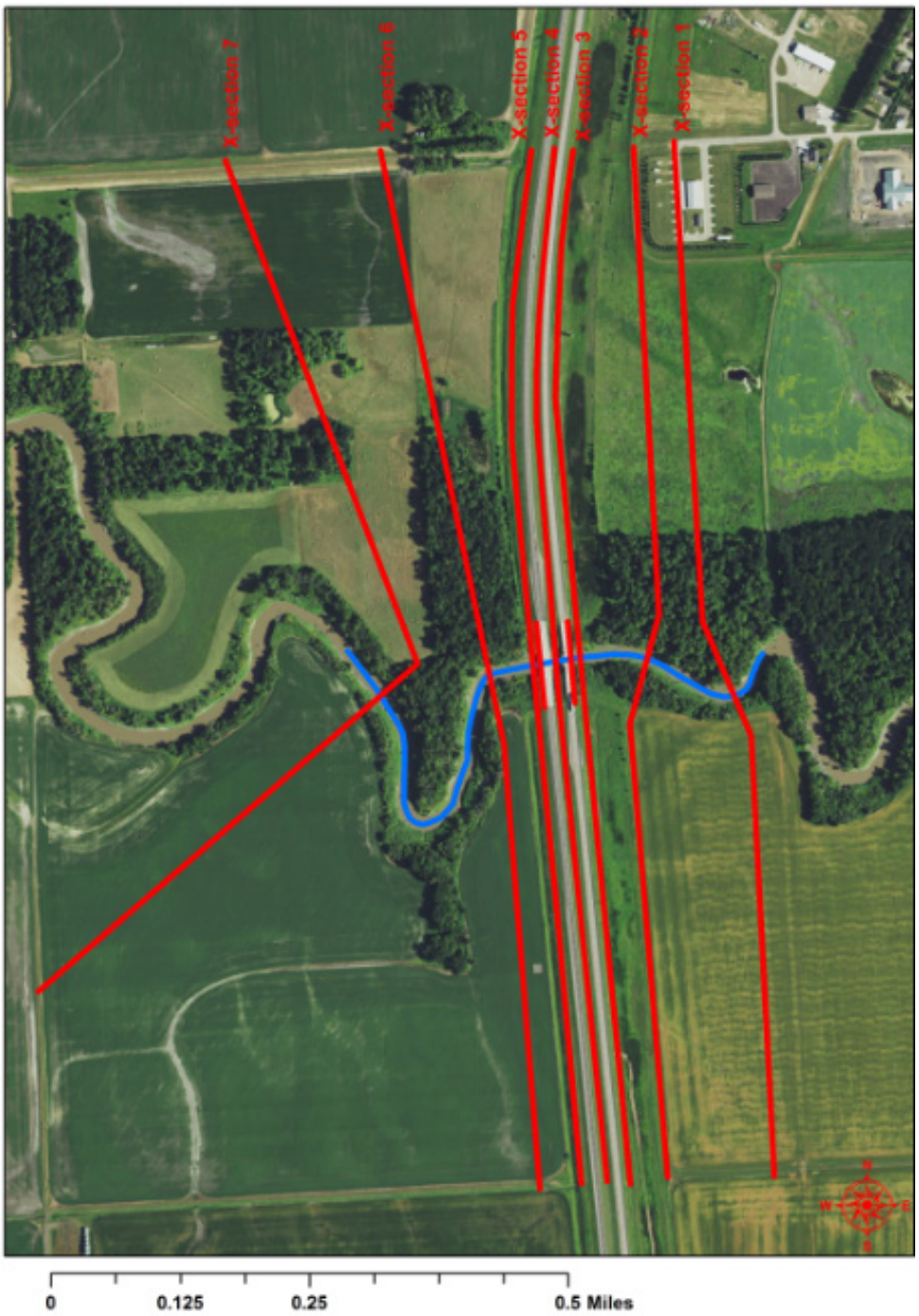

8. Modeling for replacement of box culverts or large diameter pipe culverts or structural plate pipes with new box culverts shall generally be performed using FHWA's HY-8 software. At some flood sensitive locations, the use of the US Army Corps of Engineers HEC-RAS software may be appropriate for modeling these crossings. The USACE HEC-RAS software will be required for modeling the replacement of bridges (with either bridges or box culverts), or for new box culvert or bridge crossing locations on new alignments.

9. Box culverts may be hydraulically modeled and designed up to a maximum size of a quad 16' x 16' reinforced concrete box culvert. If a larger opening than this is required, then only bridge alternatives shall be considered. Cost comparisons shall be performed to determine the most cost-effective structure. A bridge may be more cost effective than a large box culvert.

10. If a structure is in a flood hazard area, this should be documented in the Hydraulic Analysis and Structure Report, and the new structure should not increase the 100-year stage by more than the amount allowed by FEMA regulations. For structures not located within FEMA floodplains, a statement shall be provided in the hydrology section of the report noting that the structure is not within a FEMA floodplain.

V–02.02 Structure Hydraulic Reports

Generally, a hydraulic report shall be prepared for all locations where the design discharge for culverts (which is the 25-year discharge for state highways) is greater than 500 cfs, and a structure will be considered rather than the installation of pipe culverts.

V–02.02.1 Design Frequency

Design frequency (recurrence interval) shall comply with the requirements of Article 89-14 of North Dakota Administrative Code.

V–02.02.2 Contributing Drainage Area

Research of existing plans, files, special studies, etc. shall be performed to determine the drainage area and discharge values used in the previous design. These materials shall also be used if any hydraulic concerns relative to the site have been documented.

United States Geological Survey (USGS) Quad Maps or other available topographic maps or data shall be used to delineate the drainage area. The use of aerial imagery may be helpful in delineating drainage areas, particularly in regions where there is little topographic relief.

Some lakes or sloughs may be considered to be non-contributing areas if it is evident that they cannot be expected to rise enough to overflow. Care shall be used in excluding non-contributing areas.

For larger drainage areas, the contributing drainage area may be published with USGS gauge

data, and when available, these areas and associated gauged discharges will be used in determining the design discharge to be used for the hydraulic analysis of a structure. Discharges should be determined from gauge data in accordance with USGS Bulletin 17B, "Guidelines for Determining Flood Flow Frequency."

V–02.02.3 Design Discharge

Discharges that have been determined in special flood studies or from stream gages shall be used for hydraulic modeling of structures. If this information is not available, the design discharge shall be calculated. Calculation of design discharge, and use of gage data shall be in accordance with US Geological Survey Water Resources Investigation Report 92-4020 entitled "Techniques for Estimating Peak-Flow Frequency Relations for North Dakota Streams."

V–02.02.4 Waterway Opening Requirements

There are two main factors used in determining the size of the waterway needed. These are design velocity and headwater limitations. See the discussion of these factors in the paragraphs below. Other factors which may affect waterway opening may include estimated scour, economics or special site conditions.

V–02.03 Design Velocity of Flow

The size and configuration of bridges and structures without a floor are typically selected by consideration of acceptable velocities and allowable backwater fitting local site conditions. Bridge openings that generate increases in the natural channel velocity may significantly increase the scour potential and should be avoided unless the scour analysis verifies an acceptable design.

A maximum design velocity of 5 ft./sec. through bridges is typically considered an acceptable maximum velocity for streams and rivers on flat slopes with natural velocities less than 5 ft./sec.. Bridges spanning streams with natural velocities greater than 5 ft./sec. often require a design that supports a velocity through the bridge that better aligns with the natural stream velocity. For box culverts and other structures with a floor, velocities up to 10 ft./sec. are generally found to be acceptable. Higher or lower values may be used if it is deemed appropriate for a particular site.

V–02.04 Allowable Box Culvert Headwater

The design headwater elevation for box culverts shall be established in accordance with the requirements prescribed by Article 89-14 of North Dakota Administrative Code. Additionally, the Department generally avoids overtopping of the highway during the 100-year discharge, and this should be a goal of the hydraulic design as much as practicable.

V–02.05 Berms

Bridge openings shall typically be modeled with berm widths of 7 feet, measured from the back face of the abutment to the top of the channel slope. Also, the minimum clearance between the berm and the girders should be 2 feet. See Figure 1 below:

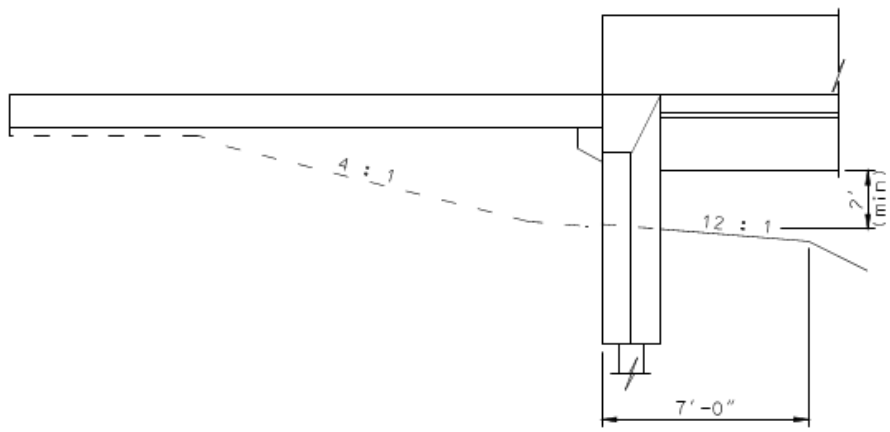

Figure 1

V–02.06 Bridge Freeboard

All new bridge alternatives shall be developed such that 1 foot of freeboard, measured from the water surface to the bottom of the lowest girder, is provided at the design discharge. Additionally, at the 100-year discharge, some minimal freeboard should be provided. Deviations from these criteria may be allowed with the approval of the NDDOT Bridge Engineer.

V–02.07 Box Culvert and Bridge Scour and Riprap

1. Scour analysis is not required for box culverts. The use of rock riprap for minimum distances of 10 feet upstream and 20 downstream from the box culvert ends is generally considered to be adequate protection for box culverts sized in accordance with the criteria previously presented in this section. If it is recognized during the modeling of the box culvert that additional riprap may be necessary, the possible need for additional protection should be addressed in the report, and the TS&L party should discuss the need for added riprap. Grade II riprap will be sufficient for installation at most box culverts which have been sized within the guidelines provided in this section.

2. For bridges, scour analyses for the 100-year and 200-year (super flood) discharges shall be performed in accordance with Hydraulic Engineering Circular No. 18 (HEC 18), and the results, and recommended scour countermeasures should be addressed in the report. Structures must be stable for the super-flood scour conditions. Before a hydraulic report for a bridge is completed, all acceptable structure alternatives should be evaluated by the

hydraulic modeler, bridge design personnel, and the deep foundation designer. A statement relative to these parties' concurrence that the modeled alternatives will be stable for the 200-year scour event shall be provided in the discussion on scour in the hydraulic report.

The 200-year discharge for scour analysis can be determined from gauge data and the methodology provided in USGS Bulletin 17B where bridges are sited adjacent to a USGS stream gauge. For bridges which are not near a stream gauge, USGS Regression Equations are used to determine the 2, 5, 10, 25, 50 and 100-year discharges. At these locations, the 200-year scour design check flood discharge shall be interpolated from the plot of the discharge curve, using the "200 Year Discharge (Interpolated Estimate for Structures" excel spreadsheet which is on the Reference and Forms page of the Design Manual on the web at: http://www.dot.nd.gov/manuals/design/designmanual/reference-forms.htm

Riprap for new bridge abutments shall extend from the abutment wall down the abutment end slope and beyond the toe of the end slope for a distance equal to 2 times the 100-year depth of flow at the toe of the end slope ($2 * Y_{100}$). The distance beyond the toe of the end slope may be limited to 25 feet. Abutment riprap on the side slopes shall extend from the abutment down to the toe of the slope on each side at a minimum, and shall extend upstream and downstream from the ends of the abutment wings for a distance of at least to 2 times the 100-year depth of flow ($2 * Y_{100}$).

Riprap for new bridge piers shall be placed on each side of the piers to cover the entire estimated scour envelope resulting from the 100-year discharge. Riprap shall be extended upstream and downstream from the pier ends for a distance equivalent to the width of the riprap placed along the sides of the piers. For piers with minimal scour envelopes, riprap shall extend, at a minimum, from the pier face on each side for a distance equal to 2 times the pier width and shall extend upstream and downstream from the pier ends for a minimum distance of 2 times the pier width. Scour envelope width at the channel bottom can be determined from the scour envelopes produced using the HEC-RAS software.

Riprap shall be installed on geosynthetic material type RR and shall have a thickness of 24". Grade II riprap will be sufficient for installation at most bridges which have been sized within the guidelines provided in this section.

Minimum riprap limits are illustrated in Figure 2. For bridges with shorter spans, the abutment and pier riprap may overlap, or only small gaps would be left between the riprap areas, in which case, installation of riprap continuously across the channel may be preferred.

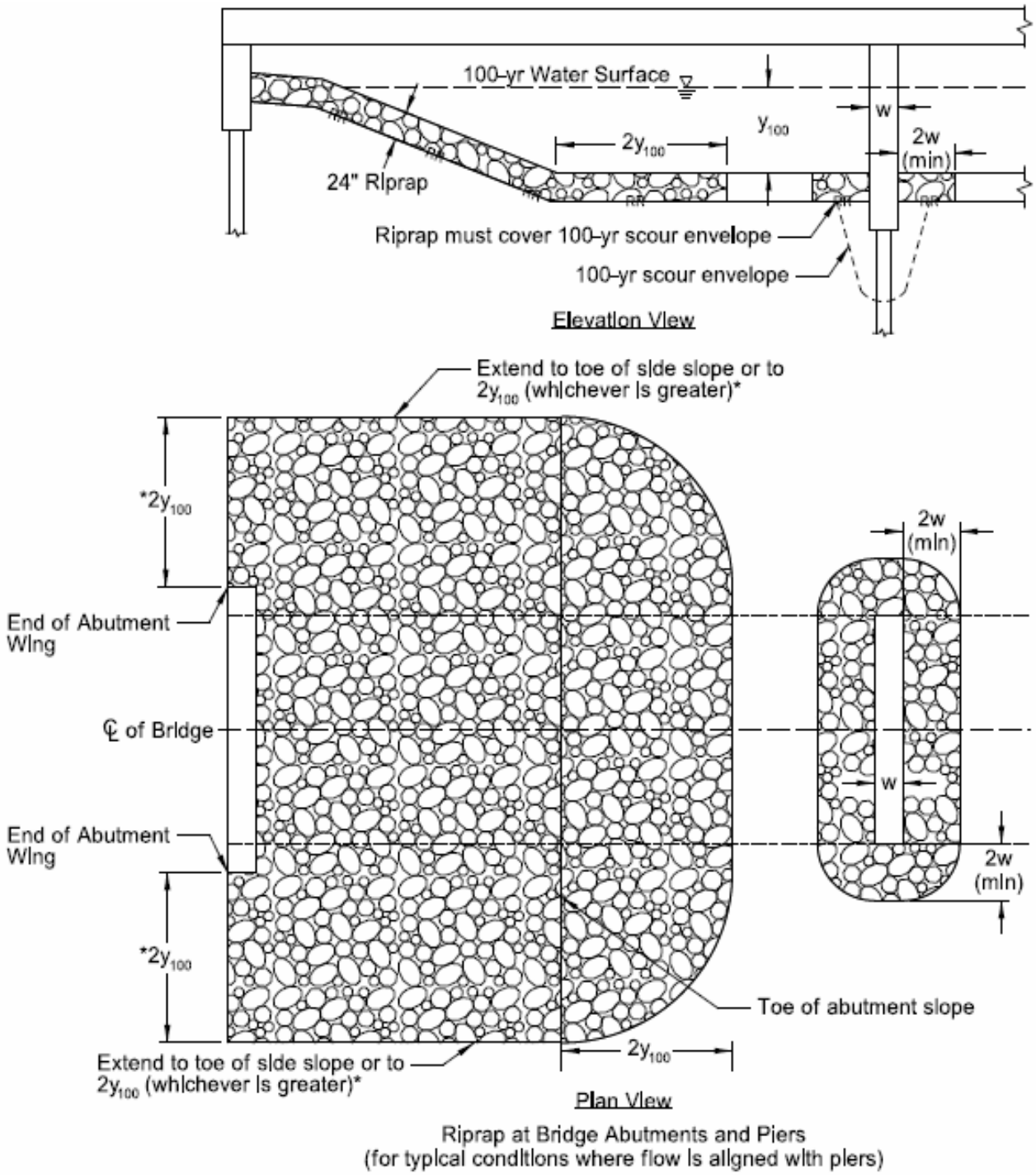

Riprap at Bridge Abutments and Piers
(for typical conditions where flow is aligned with piers)

Figure 2

V–02.08 Bridge Deck Drainage

The need for, and spacing of bridge deck drains shall be determined in accordance with Section V-02.06.26 and FHWA's HEC 21 publication. Drain openings shall be either 6" by 6" square or 6" diameter openings. Deck drain calculations are not included in the hydraulic report, but calculations need to be submitted with other design calculations for a bridge.

V–02.08 Type, Size and Location Inspection (TS&L)

When the Hydraulic Report has been completed, a TS&L inspection will be held at the project site to discuss the structural recommendations. Items which should be discussed are as follows:

1. Structure selection
2. Temporary bypass / detour need and location
3. The need for riprap / scour countermeasures
4. Disposal of the existing structure
5. Utilities
6. Right–of–Way
7. Environmental concerns that may not have been addressed in the environmental documentation.

V–02.09 Reference Documents

V–02.09.1 Hydraulic Design Series (HDS) - FHWA

1. HDS 1 Hydraulics of Bridge Waterways
2. HDS 2 Highway Hydrology
3. HDS 4 Introduction to Highway Hydraulics
4. HDS 5 Hydraulic Design of Highway Culverts
5. HDS 7 Hydraulic Design of Safe Bridges

V–02.09.2 Hydraulic Engineering Circulars (HEC) - FHWA

1. HEC 9 Debris–Control Structures
2. HEC 11 Design of Riprap Revetment
3. HEC 14 Hydraulic Design of Energy Dissipaters for Culverts and Channels
4. HEC 15 Design of Roadside Channels with Flexible Linings
5. HEC 18 Evaluating Scour at Bridges
6. HEC 20 Stream Stability at Highway Structures
7. HEC 21 Design of Bridge Deck Drainage
8. HEC 22 Urban Drainage Design Manual
9. HEC 23 Bridge Scour and Stream Instability Countermeasures

V–02.09.3 Software

1. HY- 8 FHWA Hydraulic Design of Highway Culverts
2. HEC-HMS USACE Hydrologic Modeling System
3. HEC-RAS USACE Hydrologic Engineering Center River Analysis System
4. FHWA Hydraulic Toolbox

V–02.09.4 Other Reports and Manuals

1. Highway Drainage Guidelines–AASHTO
2. WRI 92-4020 Techniques for Estimating Peak–Flow Frequency Relations for North Dakota Streams
3. WRI 96-4178 Analysis of the Peak–Flow Gaging Network in North Dakota
4. HIRE-Highways in the River Environment
5. HEC-RAS–Applications Guide
6. HEC-RAS–Hydraulic Reference Manual
7. HEC-HMS–User's Manual