NORTH DAKOTA
DEPARTMENT OF TRANSPORTATION

Alternate Pipe Materials
Implementation Plan

Prepared by

Office of Project Development

November 2008

NORTH DAKOTA DEPARTMENT OF TRANSPORTATION
BISMARCK, NORTH DAKOTA

OFFICE OF PROJECT DEVELOPMENT
Ron Henke, PE

A. **Purpose and Need:** The purpose of this document is to modify the Design policies and procedures to coincide with the "Alternate Pipe Materials" policy implemented in September of 2008 for the February 2009 bid opening. This Decision Document will provide guidance on analysis, design, plan sheet layout, bid items and what is included in those bid items.

B. **Hydraulic Analysis – Centerline & Approach pipe:** Pipes have to be analyzed for hydraulics. This is because of the difference in Manning's "n" value for pipes with a smooth interior and those with a rough or corrugated interior. When designing standard centerline culverts and approach culverts it may be necessary to eliminate certain types of pipes because of physical constraints (ex matching existing inverts). Also, in some cases, a larger size conduit may be required when using pipes with "n" values higher than 0.013.

   This will be documented and records will be kept in order to ensure valid engineering reasoning for any material limitations.

C. **Hydraulic Analysis – Storm Drains:** Storm drains present a different set of situations, when rough and smooth pipes are allowed two entire systems need to be designed as the higher "n" value associated with rough interior conduits can increase both the size and slope of the drain, thus requiring two complete designs and the bidding of alternates. The reason two designs would be required is that increased slopes force deeper drainage structures such as manholes and inlets. This could also lead to the installation of lift stations, where they would not otherwise be necessary.

   There is also concern that sediment and debris can build up in rough wall pipe, causing a difficult maintenance issue in the confined space of a storm sewer system.

   For these reasons Storm Drain pipe shall be limited to smooth interior pipe with a maximum Manning's "n" value of 0.013. This enables the use of Reinforced Concrete Pipe, and Plastic, as well as Spiral-Rib Metal Pipe which has a much smoother interior than traditional Corrugated Metal Pipe.

D. **Bid Items:** Three individual bid items are proposed, one for each major location of pipe:

   1. **Pipe Conduit __ IN:** This would encompass the typical transverse centerline culvert
   2. **Pipe Conduit __ IN – Storm Drain:** This would encompass urban drainage and would be limited to those pipes with a Manning's "n" value of 0.013 or lower. This would also allow us to continue to specify gasket RCP.
   3. **Pipe Conduit __ IN – Approach:** This would encompass all approach pipe designations.

   The use of these three items gives us numerous advantages. The first is bid history. Since different requirements are used in different locations more accurate cost estimates will be available for each location. Another advantage is specifications. Because of the different requirements, separate bid items allow us to more easily write specifications and notes for the appropriate item.

   Occasionally a larger size CMP will be required where a smaller RCP, or other smooth walled pipe, would provide the same hydraulic function (for example a 30" CMP vs a 24" RCP). When this occurs it is proposed to use the smaller pipe size as the controlling bid item. For example the bid item would be "Pipe Conduit 24 IN" and the Pipe Table in the plans would show the required diameter for all types of materials allowed at that location.

This helps to simplify things from a bidding standpoint. An alternate bid would be required if two either/or pay items were used for a single culvert installation.

E. **Backfill Details:** Slight changes are proposed for the shallow and deep backfill drawings. Labels were modified for consistency and the note regarding R1 Fabric was removed as it is covered in the Standard Specifications.

Additionally, modifications to two existing details have been made. The first is the detail for pipes installed on Existing Ground. This was modified to include the additional cover aggregate for metal pipe and made minor changes to the notes to include new compaction requirements.

The second detail is the low speed roadway detail. This detail is being modified for consistency regarding trenching, backfilling and compaction.

These drawings are proposed as Standard Drawings. The existing details are included in Appendix A and the proposed Standards are in Appendix B. The proposed Standards have been marked to show changes from the existing Details.

F. **Items included in bid price:** The shallow pipe detail included a quantity of common excavation at the top of the trench. This quantity included the 20:1 tapers. This Plan proposes that the common excavation bid item be removed and that the entire area be considered trench excavation.

G. Decisions

Do you concur with the Alternate Pipe Materials Implementation Plan as proposed?

__X__ Yes

_____ No

Do you concur with Item C, limiting pipes used in Storm Drain applications to those with a maximum "n" value of 0.013?

__X__ Yes

_____ No

Do you concur with item D, the proposed bid items and the method of paying for conduits that may differ in size (based on material)?

_____ Yes **

_____ No

Do you concur with the changes to the Details proposed in Item E, and making those Details into Standard Drawings?

__X__ Yes

_____ No

Do you concur with the elimination of the Common Excavation pay item for shallow pipes, proposed in Item F?

_____ Yes **

_____ No

Amendments/Comments for Alternate Pipe Materials Implementation Plan:

** Agree with what is proposed but adjustments should be made if problems arise.

Ron Henke, P.E. Director, Office of Project Development

11/24/08
Date

Appendix A
Existing Backfill Details

STATE	PROJECT NO.	SECTION NO.	SHEET NO.
ND			

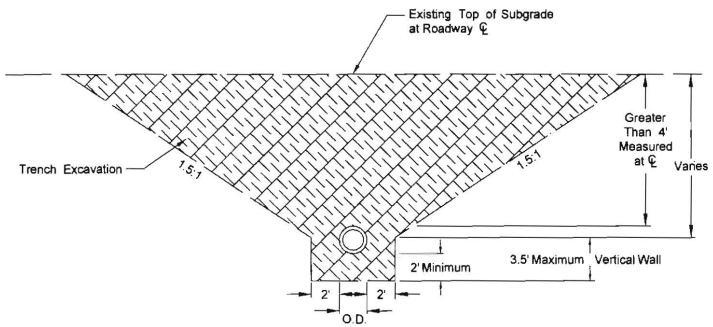

Removal Detail

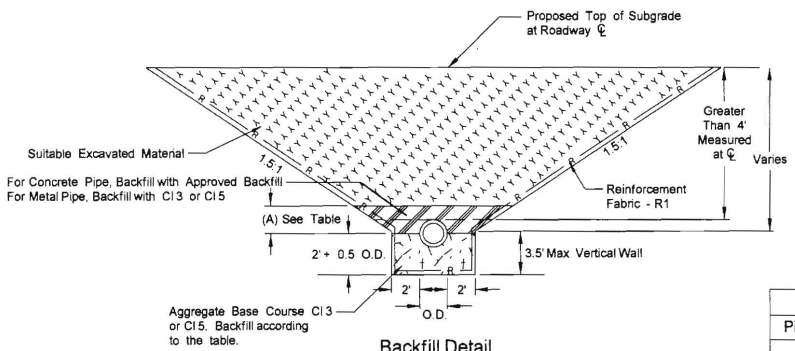

Backfill Detail

Backfill Requirements	
Pipe Materials	Dimension (A)
Concrete	0.5 O.D.
Metal	0.5 O.D. + 1'

Included in Pipe Pay Item
1) Pipe
2) Trench excavation
3) Disposal of unsuitable excavated material and placement of suitable excavated material on inslope
4) Backfill of suitable excavated material
5) Aggregate Base Course Cl 3 or Cl 5
6) Approved Backfill

Pay Items
1) Pipe
2) All Reinforcement Fabric - Type R1
3) Surfacing Removal

NOTES:

1. The reinforcement fabric shall be rolled out parallel to the centerline of the road and shall be placed as shown in the details. The fabric shall be placed so that it is taut and the fabric shall be pinned on the 1.5:1 transition using 6" minimum pins. The pins shall be placed at a 15' spacing along all edges and at all corners prior to placing fill on the fabric. The reinforcement fabric shall be measured by the actual surface area covered to the nearest square yard. No allowance will be made for overlaps.

2. This detail corresponds to new/replaced mainline and paved intersection roadways (including ramps). It does not include pipes in approaches.

3. Compaction requirements for all materials associated with the trench installation shall meet 90% of AASHTO T-180. Maximum thickness of any one lift shall not exceed 6 inches.

4. Approved Backfill shall meet the requirements of AASHTO M 145 for A-1, A-2, and A-3 soils.

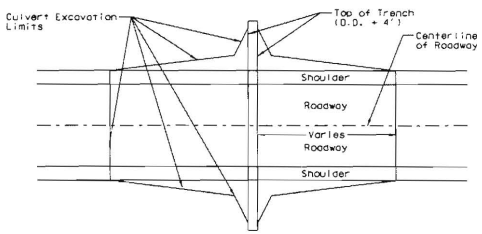

PLAN VIEW OF CULVERT (NOT TO SCALE)

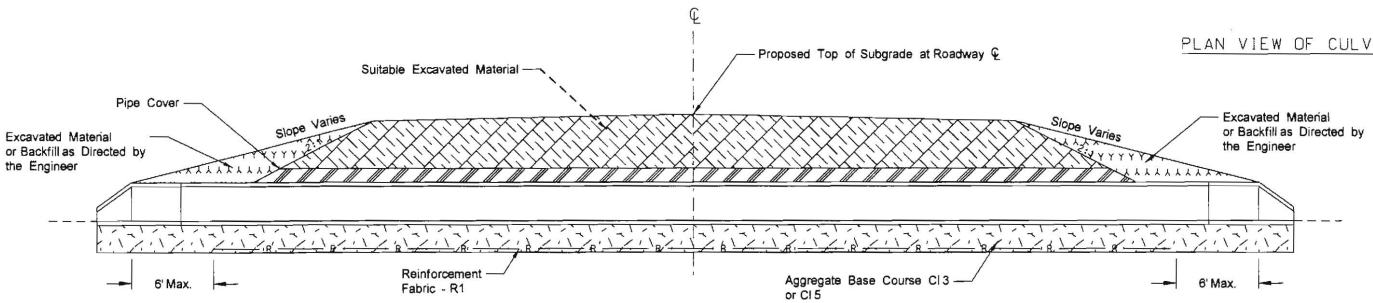

Cross Section View - Proposed Section

Transverse Centerline Pipe Backfill Detail for Pipes Greater than 4 feet Below the Proposed Base

STATE	PROJECT NO.	SECTION NO.	SHEET NO.
ND			

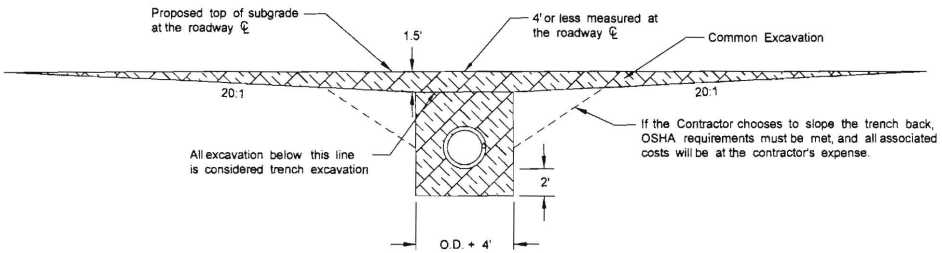

Removal Detail

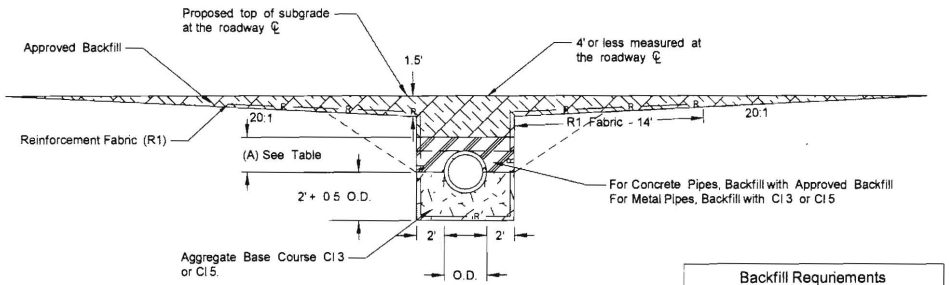

Backfill Detail

Backfill Requriements	
Pipe Materials	Dimension (A)
Concrete	0.5 O.D.
Metal	0.5 O.D. + 1'

Included in Pipe Pay Item
1) Pipe
2) Trench excavation
3) Disposal of unsuitable excavated material and placement of suitable excavated material on inslope.
4) Aggregate Base Course Cl 3 or Cl 5
5) Approved Backfill

Pay Items
1) Pipe
2) All Reinforcement Fabric - Type R1
3) Surfacing Removal
4) Common Excavation

NOTES:

1. The reinforcement fabric shall be rolled out parallel to the centerline of the road and shall be placed as shown in the details. The fabric shall be placed so that it is taut and the fabric shall be pinned on the 20:1 transition using 6" minimum pins. The pins shall be placed at a 15' spacing along all edges and at all corners prior to placing fill on the fabric. The reinforcement fabric shall be measured by the actual surface area covered to the nearest square yard. No allowance will be made for overlaps.

2. This detail corresponds to new/replaced mainline and paved intersection roadway pipes only (including ramps). It does not include pipes in approaches.

3. Compaction requirements for all materials associated with the trench installation shall meet 90% of AASHTO T-180. Maximum thickness of any one lift shall not exceed 6 inches.

4. Approved Backfill shall meet the requirements of AASHTO M 145 for A-1, A-2, and A-3 soils.

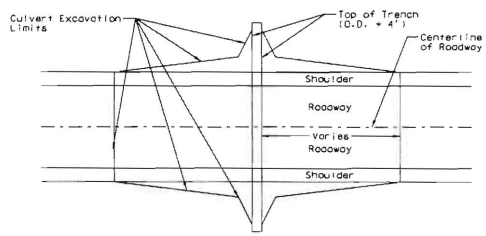

PLAN VIEW OF CULVERT (NOT TO SCALE)

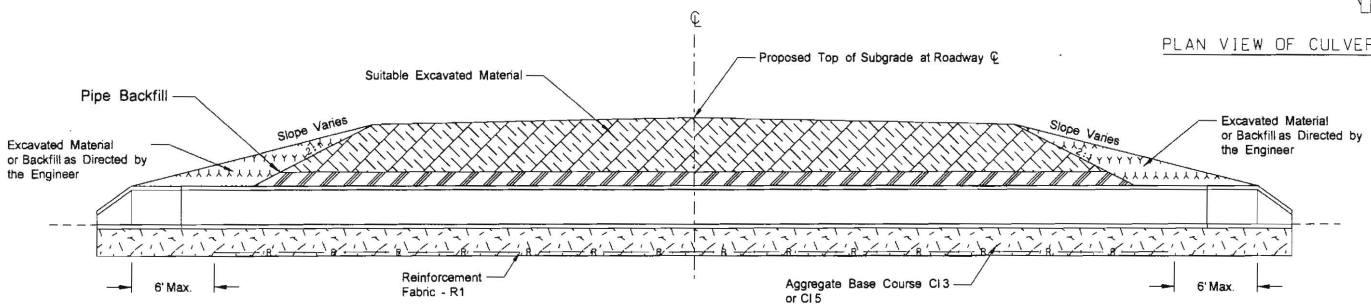

Cross Section View - Proposed Section

Transverse Centerline Pipe Backfill Detail for Pipes 4' and Less Below the Proposed Base

STATE	PROJECT NO.	SECTION NO.	SHEET NO.
ND	project number	20	page

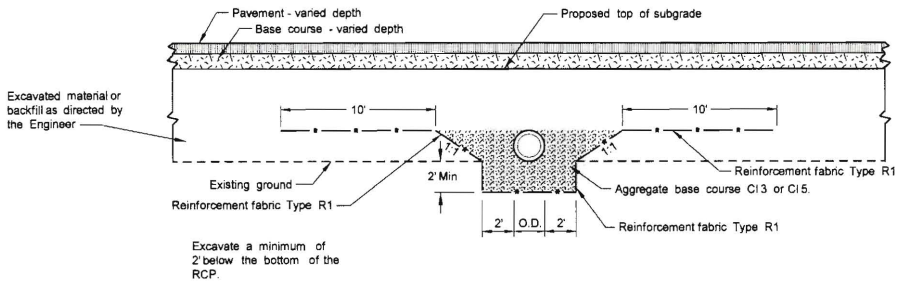

Backfill Detail

Included in Pipe Pay Item

1) Pipe
2) Trench excavation
3) Disposal of unsuitable excavated material and placement of suitable excavated material on inslope.

Pay Items

1) Pipe
2) Aggregate Base Course CI 3 or CI 5
3) All Reinforcement Fabric - Type R1
4) Surfacing removal if Required

NOTES:

1. The reinforcement fabric shall be rolled out parallel to the roadway centerline. The fabric shall be placed so that it is taut, and shall be pinned on the 1:1 transition using 6" minimum length pins. The pins shall be placed at a 15' spacing along all edges and at all corners prior to placing fill on the fabric. The reinforcement fabric shall be measured by the actual surface area covered, to the nearest square yard. No allowance will be made for overlaps.

2. The aggregate base course CI3 or CI 5 backfill shall be compacted in layers not to exceed 6 inches using a hand-held vibratory plate compactor or a hand-held mechanical tamper to the top of the pipe and within a distance of 2 feet on either side of the pipe.

3. These details apply to new/extended centerline pipes only. They do not apply to pipes in approaches.

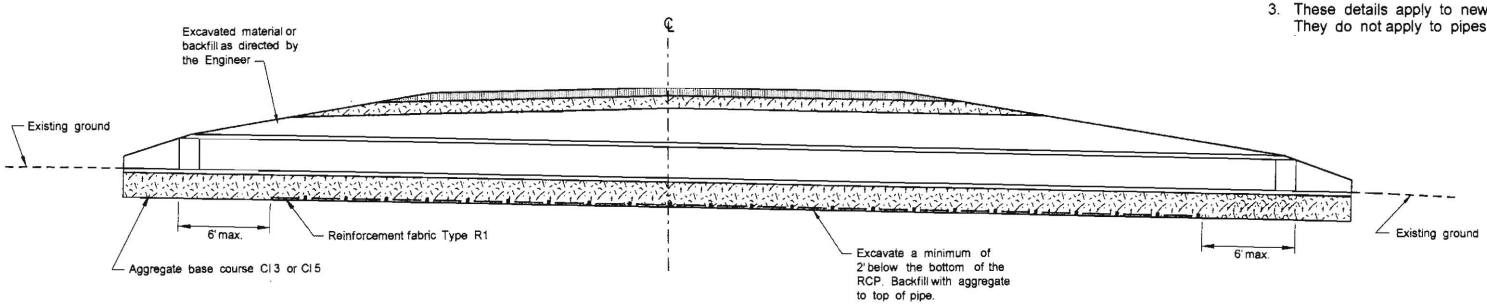

Cross Section View - Proposed Section

Transverse Centerline Pipe Backfill Details
For New Pipe Laid on Existing Ground
In Embankment Areas

STATE	PROJECT NO.	SECTION NO.	SHEET NO.
ND	project number	sec	page

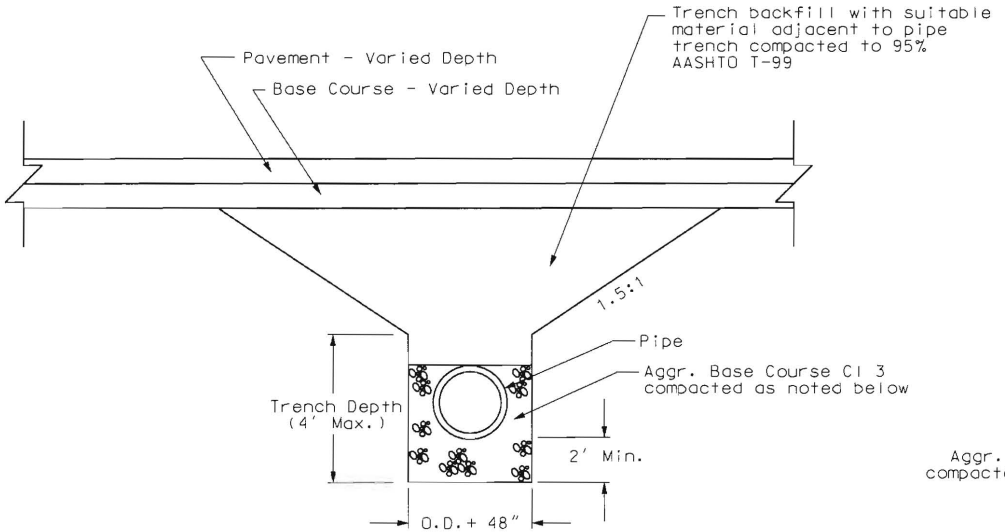

BEDDING AND BACKFILL FOR PIPE UNDER ROADWAY

SECTION A-A

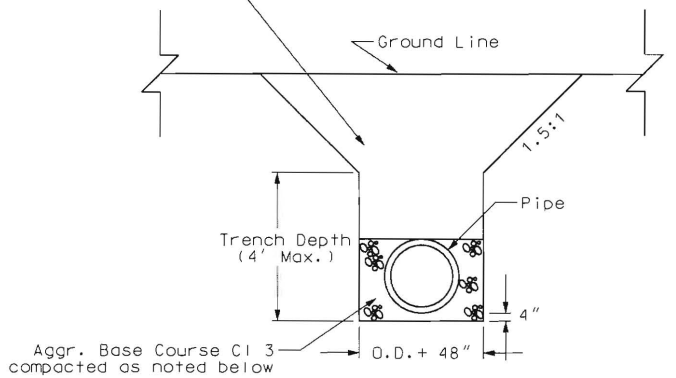

BEDDING AND BACKFILL FOR PIPE NOT UNDER ROADWAY

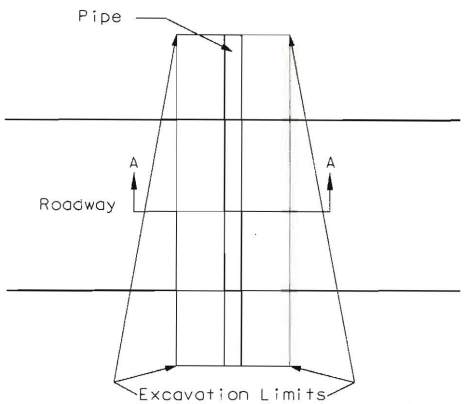

Included in Pipe Pay Item
1) Pipe
2) Trench excavation
3) Disposal of unsuitable excavated material and placement of suitable excavated material on inslope.
4) Backfill of suitable excavated material

Pay Items
1) Pipe
2) Aggregate Base Course Cl 3
3) Surfacing removal

NOTE:

The aggregate base course Cl 3 backfill shall be compacted in layers not to exceed 6 inches using a hand-held vibratory plate compactor or a hand-held mechanical tamper to the top of the pipe and within a distance of 2 feet on either side of the pipe.

Pipe Backfill Detail
For Storm Drain Pipe
Under Roadways of
40 mph or less

SDPIPEBKFILL

Appendix B
Proposed Backfill Standard Drawings

TRANSVERSE CENTERLINE PIPE BACKFILL FOR PIPES MORE THAN 4 FEET BELOW THE PROPOSED BASE

D-714-25

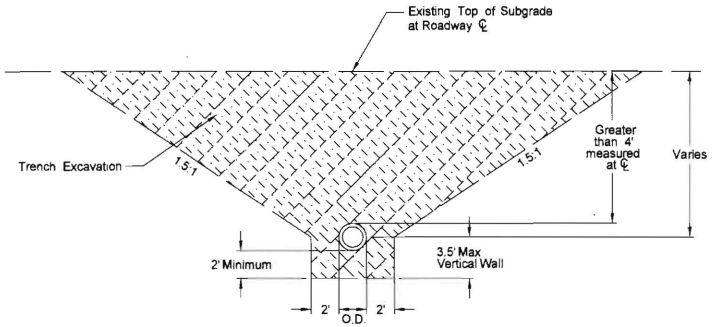

Removal Detail

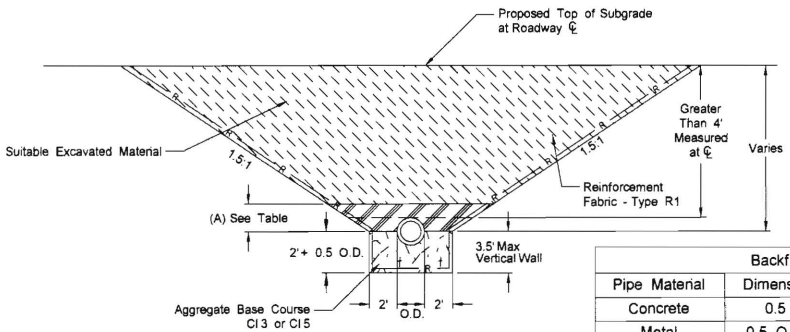

Backfill Detail

A third column was added to this table. This info was in a label pointing to the drawing.
Also added a reference to the note that defines Approved Backfill.

Backfill Requirements		
Pipe Material	Dimension (A)	Backfill
Concrete	0.5 O.D.	Approved Backfill (Note 2)
Metal	0.5 O.D. + 1'	Cl 3 or Cl 5

Included in Pipe Pay Item

1) Pipe
2) Trench excavation
3) Disposal of unsuitable excavated material and placement of suitable excavated material on inslope
4) Backfill of suitable excavated material
5) Aggregate Base Course Cl 3 or Cl 5

Pay Items

1) Pipe
2) Reinforcement Fabric - Type R1
3) Surfacing Removal

NOTES:

1. This drawing corresponds to new/replaced mainline and paved intersection roadways (including ramps). It does not include pipes in approaches.
2. Approved backfill shall meet the requirements of AASHTO M 145 for A-1, A-2 or A-3 soils.
3. Compaction requirements for all materials associated with the trench installation shall meet 90% of AASHTO T-180. Maximum thickness of any one lift shall not exceed 6 inches.

Note 1 (fabric installation) was removed as this is covered in section 709 of the Std Specs.

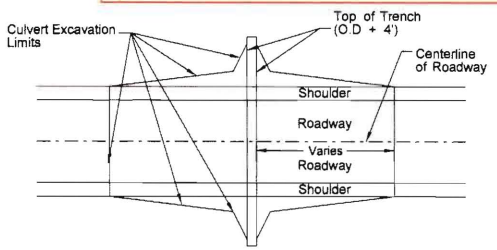

Plan View of Culvert (Not to Scale)

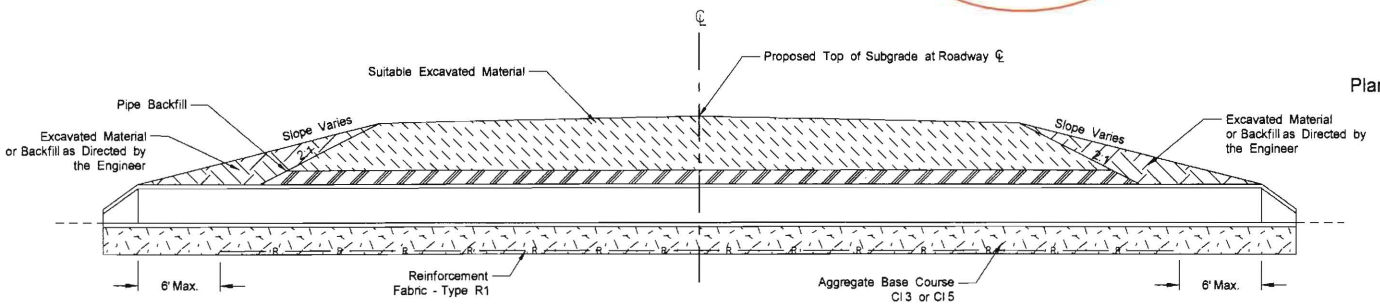

Cross Section View - Proposed Section

NORTH DAKOTA DEPARTMENT OF TRANSPORTATION	
10-31-08	
REVISIONS	
DATE	CHANGE

This document was originally issued and sealed by pe_name, Registration Number PE- pe_# on mm/dd/yy and the original document is stored at the North Dakota Department of Transportation

TRANSVERSE CENTERLINE PIPE BACKFILL FOR PIPES 4 FEET OR LESS BELOW THE PROPOSED BASE

D-714-26

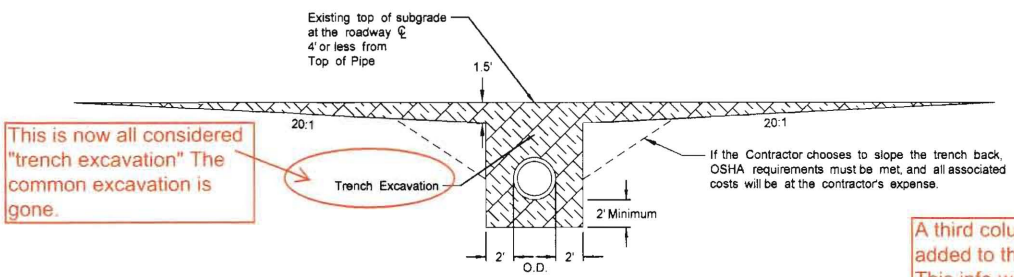

This is now all considered "trench excavation" The common excavation is gone.

Removal Detail

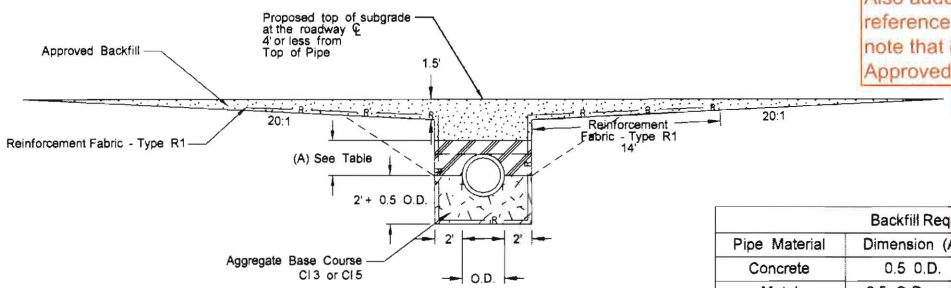

Backfill Detail

A third column was added to this table. This info was in a label pointing to the drawing.
Also added a reference to the note that defines Approved Backfill.

Backfill Requirements		
Pipe Material	Dimension (A)	Backfill
Concrete	0.5 O.D.	Approved Backfill (Note 2)
Metal	0.5 O.D. + 1'	Cl 3 or Cl 5

Changed from "Suitable Excavated Material"

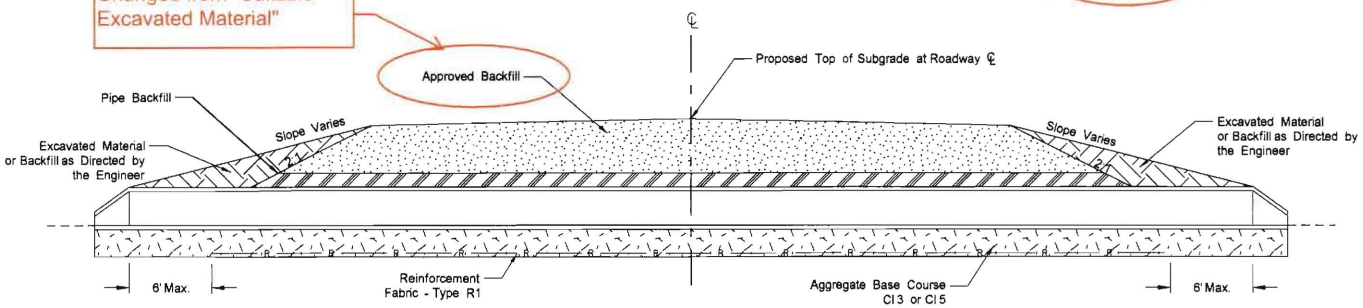

Cross Section View - Proposed Section

Included in Pipe Pay Item
1) Pipe
2) Trench excavation
3) Disposal of unsuitable excavated material and placement of suitable excavated material on Inslope.
4) Aggregate Base Course Cl 3 or Cl 5
5) Approved Backfill

Pay Items
1) Pipe
2) Reinforcement Fabric - Type R1
3) Surfacing Removal

NOTES:

1. This drawing corresponds to new/replaced mainline and paved intersection roadway pipes only (including ramps). It does not include pipes in approaches.
2. Approved Backfill shall meet the requirements of AASHTO M 145 for A-1, A-2, and A-3 soils.
3. Compaction requirements for all materials associated with the trench installation shall meet 90% of AASHTO T-180. Maximum thickness of any one lift shall not exceed 6 inches.

Note 1 (fabric installation) was removed as this is covered in section 709 of the Std Specs.

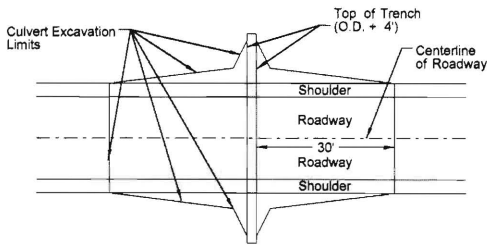

Plan View of Culvert (Not to Scale)

NORTH DAKOTA DEPARTMENT OF TRANSPORTATION	
10-31-08	
REVISIONS	
DATE	CHANGE

This document was originally issued and sealed by pe_name, Registration Number PE- pe_# on mm/dd/yy and the original document is stored at the North Dakota Department of Transportation

D-714-27

PIPE BACKFILL FOR STORM DRAIN UNDER ROADWAYS OF 40 MPH OR LESS AND PIPE NOT UNDER ROADWAY

This detail was changed for consistency with other drawings. Surfacing was removed, the tapers were made optional, the backfill around the pipe was modified to reflect new practices.

Label changed. Previous label conflicted with new compaction requirements.

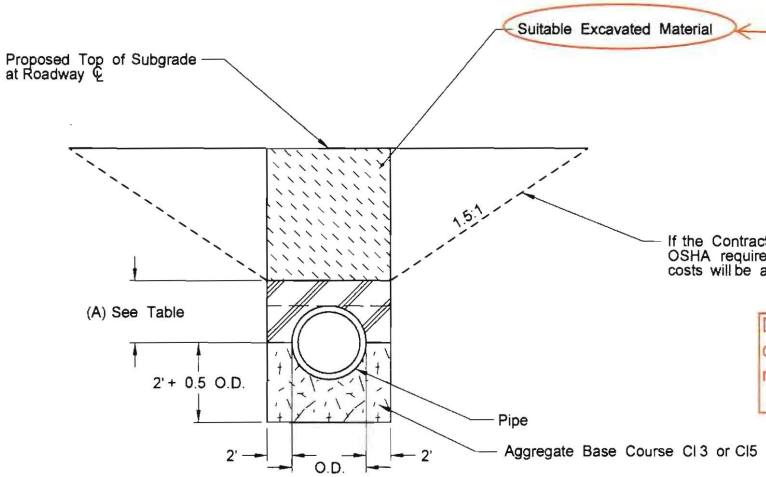

BEDDING AND BACKFILL FOR STORM DRAIN UNDER ROADWAY

Detail adjusted to show change in backfill requirements

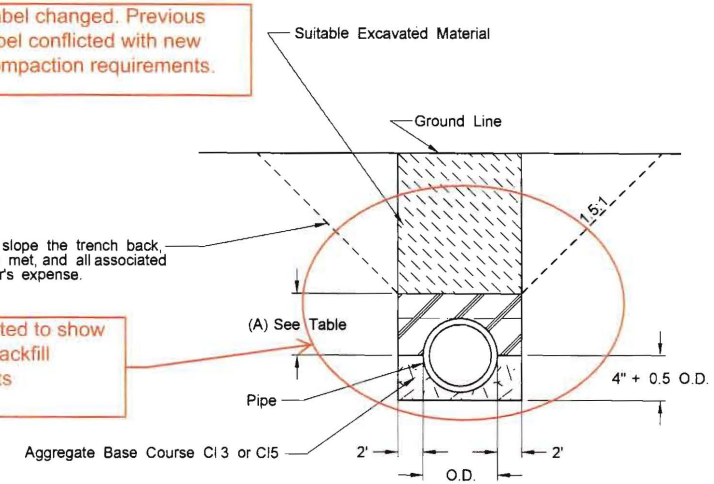

BEDDING AND BACKFILL FOR STORM DRAIN NOT UNDER ROADWAY

The plan view of the pipe installation was removed from this area. It only showed transverse installations under the roadway, which is only 1 of 3 situations covered on this drawing. It also didn't provide any info that isn't available elsewhere on the drawing.

Included in Pipe Pay Item

1) Pipe
2) Trench excavation
3) Disposal of unsuitable excavated material and placement of suitable excavated material.
4) ~~Backfill of suitable excavated material~~
5) Aggregate Base Course Cl3 or Cl5

Moved from "Pay Items" list

Table added

Backfill Requirements		
Pipe Material	Dimension (A)	Backfill
Concrete	0.5 O.D.	Approved Backfill (Note 2)
Metal	0.5 O.D. + 1'	Cl 3 or Cl 5
PVC/HDPE	0.5 O.D. + 1'	Cl 3 or Cl 5

Pay Items

1) Pipe
2) Surfacing removal

NOTES:

1. This drawing corresponds to Storm Drain Pipe only. It does not include pipes in approaches.
2. Approved backfill shall meet the requirements of AASHTO M 145 for A-1, A-2, and A-3 soils.
3. Compaction requirements for all materials associated with the trench installation shall meet 90% of AASHTO T-180. Maximum thickness of any one lift shall not exceed 6 inches.

Old note removed and new notes added.

NORTH DAKOTA DEPARTMENT OF TRANSPORTATION	
10-31-08	
REVISIONS	
DATE	CHANGE

This document was originally issued and sealed by pe_name, Registration Number PE- pe_# on mm/dd/yy and the original document is stored at the North Dakota Department of Transportation

TRANSVERSE CENTERLINE FILL FOR NEW PIPE LAID ON EXISTING GROUND IN EMBANKEMENT AREAS

D-714-28

Changed to "Embankment Material" to avoid confusion with material placed on inslopes

Surfacing removed for consistency

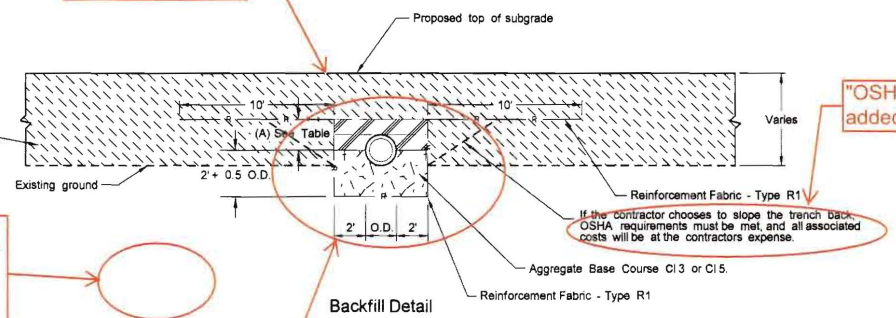

Backfill Detail

"OSHA" note added

Included in Pipe Pay Item

1) Pipe
2) Trench excavation
3) Disposal of unsuitable excavated material and placement of suitable excavated material on inslope.
4) Aggregate Base Course Cl 3 or Cl 5

Moved from "Pay Items" list

Pay Items

1) Pipe
2) Reinforcement Fabric - Type R1
3) Surfacing removal if required

"Excavate a minimum of 2' below the bottom of the pipe." note was removed. This doesn't appear on other drawings and dimension in detail shows depth of fill.

Modified for consistency with other drawings

NOTES:

1. This drawing corresponds to new/extended mainline and paved intersection roadway pipes only (including ramps). It does not include pipes in approaches.
2. Approved backfill shall meet the requirements of AASHTO M 145 for A-1, A-2 or A-3 soils.
3. Compaction requirements for all materials associated with the trench installation shall meet 90% of AASHTO T-180. Maximum thickness of any one lift shall not exceed 6 inches.

Old notes removed and new notes added

Backfill Requirements		
Pipe Material	Dimension (A)	Backfill
Concrete	0.5 O.D.	Approved Backfill (Note 2)
Metal	0.5 O.D. + 1'	Cl 3 or Cl 5

Table added

Modified for updates to backfill layers in detail above

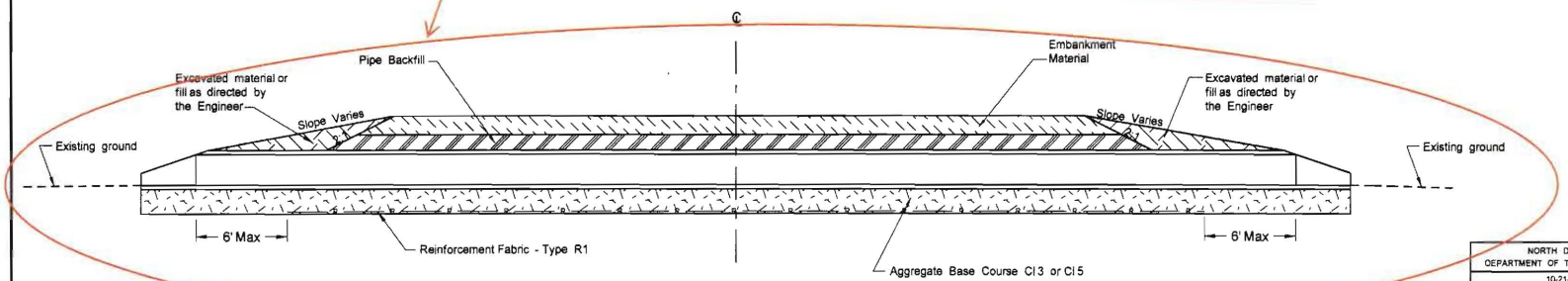

Cross Section View - Proposed Section

NORTH DAKOTA DEPARTMENT OF TRANSPORTATION	
10-21-08	
REVISIONS	
DATE	CHANGE

This document was originally issued and sealed by pe_name, Registration Number PE- pe_# on mm/dd/yy and the original document is stored at the North Dakota Department of Transportation

Appendix C
Example Pipe List

Begin Station / Location	Begin Offset	End Station / Location	End Offset	Length	Pipe Conduit Pay Size	Pipe Conduit Approach Pay Size	Pipe Conduit Storm Drain Pay Size	Allowable Material	Required Diameter	Minimum Thickness	R1 Fabric (Pay Item)	(A) End Sections		(A) Backfill Cl 3 or Cl 5	Applicable Backfill Detail
												Begin	End		
				LF			In		In	ga.	SY	EA	EA	CY	
3A		3		40			18	Reinforced Concrete Pipe - Class III	18					22	D-714-27
								Zinc Coated Steel (2-2/3" x 1" Ribs)	18	0.168				41	
								Aluminum Coated Steel (Type 2)	18	0.138				41	
								Polymeric Coated Steel (over zinc or aluminum coated steel)	18	0.064				41	
1296+30	44' Lt	1296+30	46' Rt	90	24			Reinforced Concrete Pipe - Class III	24		298	Y	Y	50	D-714-26
								Zinc Coated Steel (2-2/3" x 1" Ribs)	30	0.168				92	
								Zinc Coated Steel (3/4" x 3/4" @ 7-1/2" Ribs)	24	0.168				85	
								Aluminum Coated Steel (Type 2)	30	0.138				92	
								Aluminum Alloy	30	0.060				92	
								Polymeric Coated Steel (over zinc or aluminum coated steel)	24	0.064				85	
1304+25	48' Lt	1304+25	49' Rt	97	30			Reinforced Concrete Pipe - Class III	30		340	Y	Y	54	D-714-25
								Zinc Coated Steel (2-2/3" x 1" Ribs)	30	0.064				45	
								Aluminum Coated Steel (Type 2)	30	0.064				54	
								Polymeric Coated Steel (over zinc or aluminum coated steel)	30	0.064				45	
1345+60	67' Rt	1346+04	67' Rt	44		18		Reinforced Concrete Pipe - Class III	18			Y	Y	24	N/A
								Zinc Coated Steel (2-2/3" x 1" Ribs)	18	0.064				37	
								Aluminum Coated Steel (Type 2)	18	0.064				37	
								Polymeric Coated Steel (over zinc or aluminum coated steel)	18	0.064				37	

(A) Not paid for separately, to be included in the price bid for Pipe Conduit.