TRANSVERSE CONSTRUCTION JOINT

D-550-5

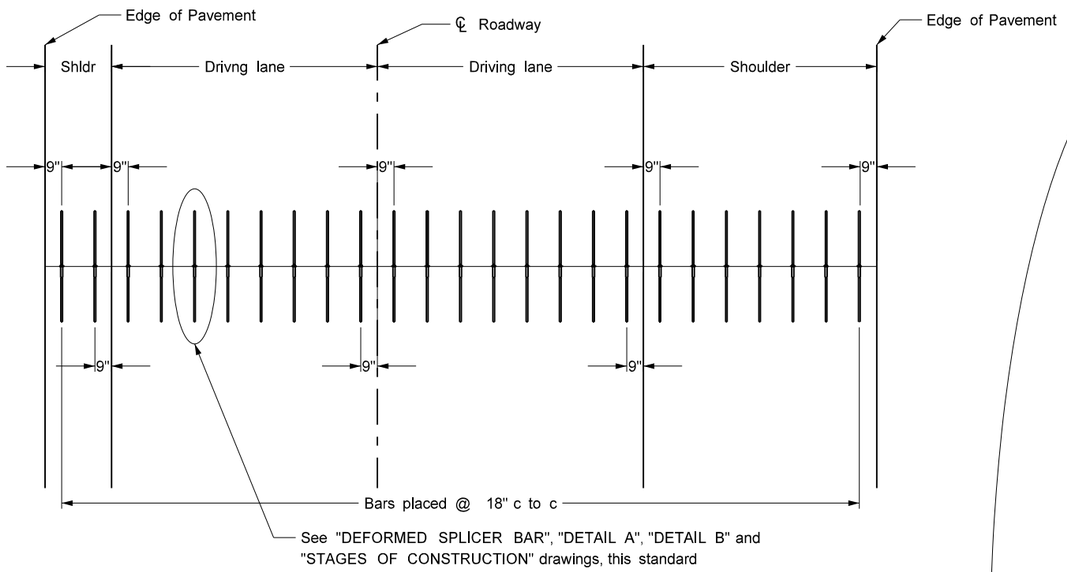

PLAN VIEW

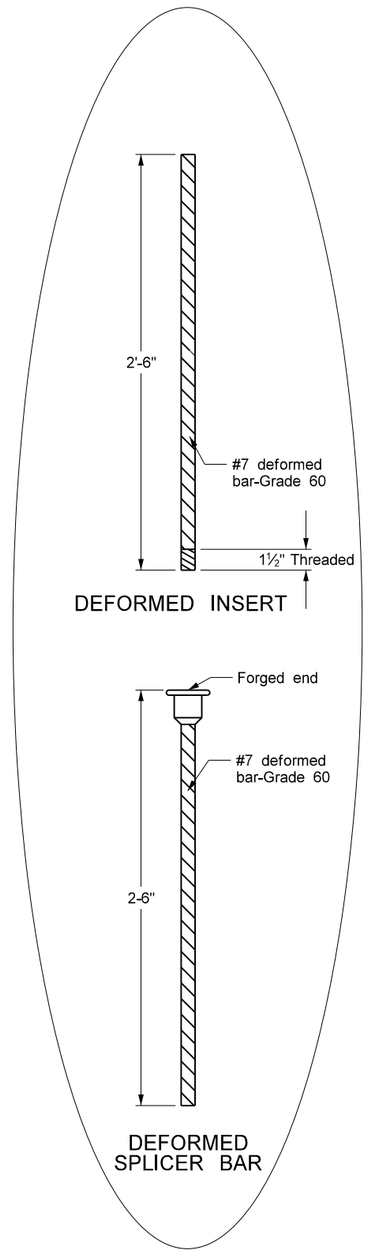

DEFORMED INSERT

DEFORMED SPLICER BAR

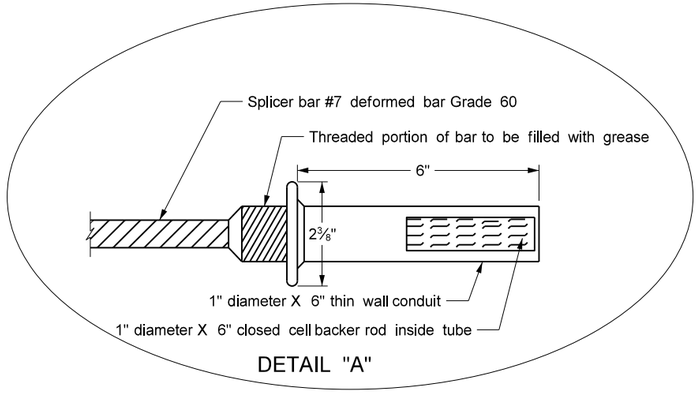

DETAIL "A"

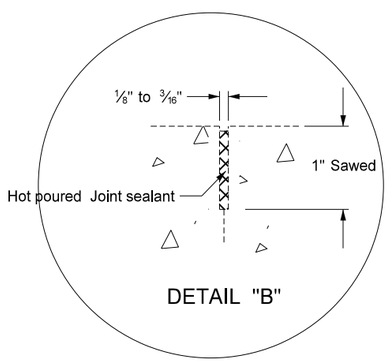

DETAIL "B"

STAGES OF CONSTRUCTION

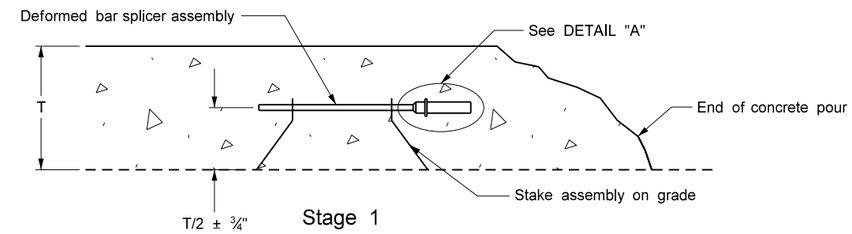

Stage 1

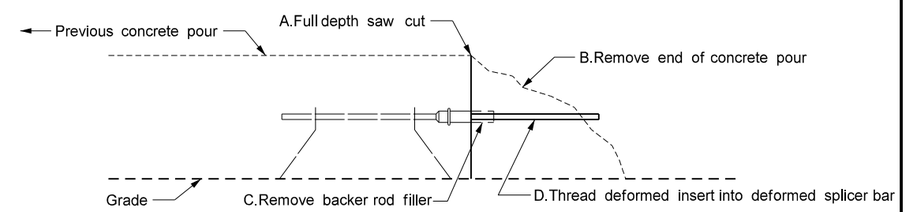

Stage 2

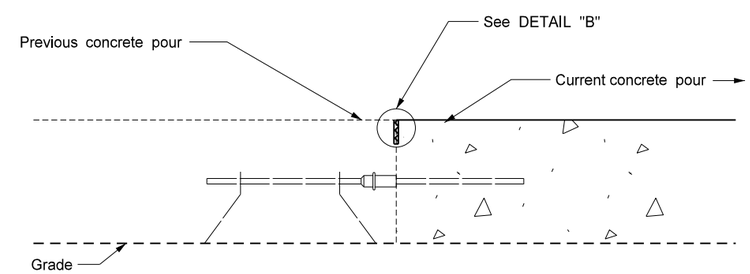

Stage 3

Notes

1. Saw and seal all construction joints.
2. Include all costs for transverse construction joints in the price bid for PCC pavement.
3. Do not saturate the subgrade during the sawing operation.

NORTH DAKOTA DEPARTMENT OF TRANSPORTATION	
9-15-2010	
REVISIONS	
DATE	CHANGE
3-16-16	Revised Joint Details and notes

This document was originally issued and sealed by Roger Weigel, Registration Number PE- 2930 , on 3/16/2016 and the original document is stored at the North Dakota Department of Transportation