D-772-3

TRAFFIC SIGNAL STANDARDS
(MAST ARM TYPE)

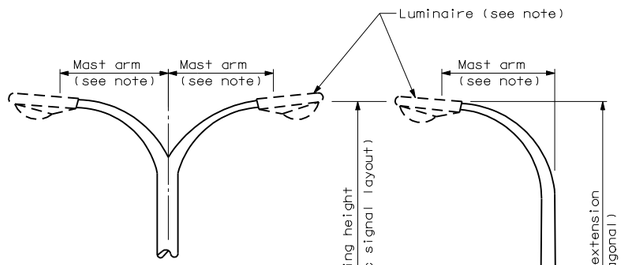

TWIN MAST ARM

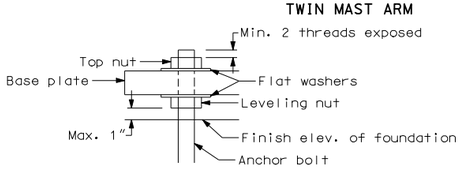

ANCHOR BOLT DETAIL

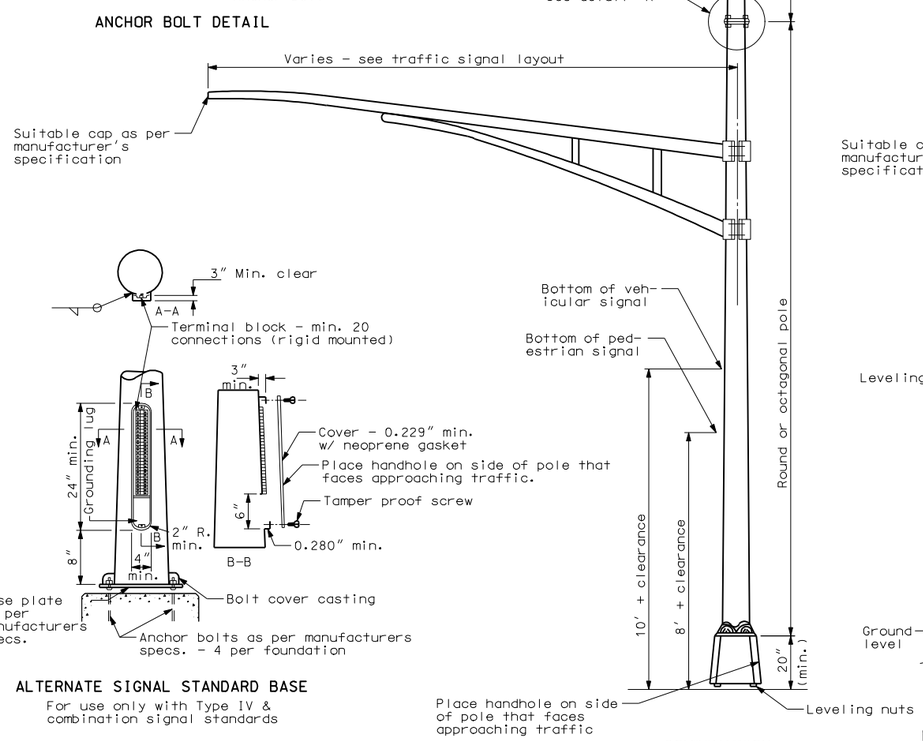

ALTERNATE SIGNAL STANDARD BASE

For use only with Type IV & combination signal standards

COMBINATION SIGNAL AND LIGHT STANDARD

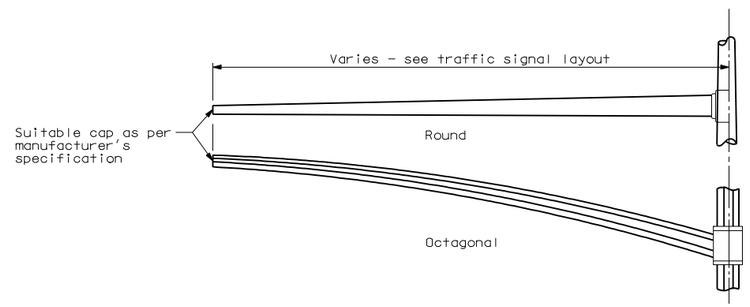

MONOTUBE TYPE MAST ARMS

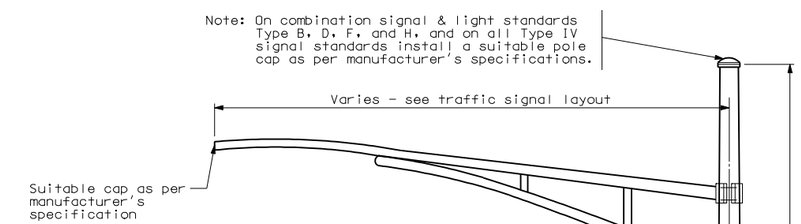

TRUSS TYPE MAST ARM

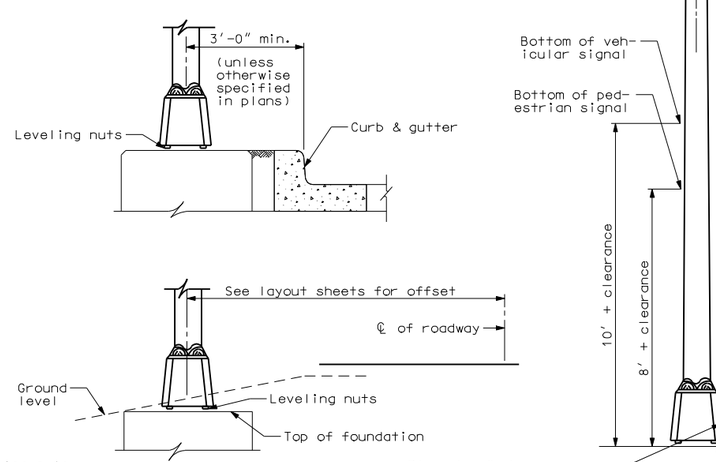

SIGNAL STANDARD MIN. CLEARANCE DETAIL

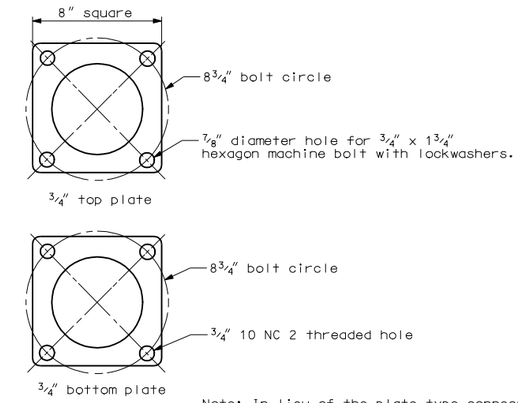

DETAIL "A"

Note: In lieu of the plate type connection a telescoping clamp type extension may be used.

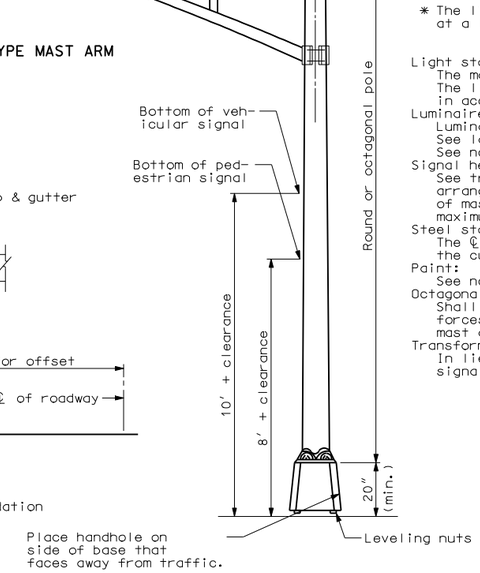

TYPE IV SIGNAL STANDARD

Notes: COMBINATION SIGNAL AND LIGHT STANDARD:

Signal Standard Type	Luminaire Mounting Height	Install Light Standard Extension and Luminaire	Luminaire Mast Arm
A	30 ft.	yes	single
B	30 ft.	*	single
C	40 ft.	yes	single
D	40 ft.	*	single
E	30 ft.	yes	twin
F	30 ft.	*	twin
G	40 ft.	yes	twin
H	40 ft.	*	twin
I	50 ft.	yes	single
J	50 ft.	yes	twin

* The light standard extension for these signal standards shall be installed at a later date under a separate contract.

Light standard extension:
The mast arm shall be 6 ft., unless otherwise noted on the plans. The light standard extension shall be galvanized. Galvanizing shall be in accordance with ASTM A 123.

Luminaire:
Luminaires shall be internal ballast - constant wattage 120 x 240 voltage. See layout sheets for type of luminaire, wattage, and I.E.S. distribution. See note sheet for operating voltage.

Signal head:
See traffic signal layout for correct mounting position, number, size, and arrangement of lenses. Clearance from the ℄ of the roadway to the bottom of mast arm mounted signal heads shall be 17 ft. minimum and 19 ft. maximum.

Steel standard:
The ℄ of the signal standard shall be a minimum of 3 ft. from the face of the curb unless shown otherwise on the layout sheets.

Paint:
See note sheet for required color of paint.

Octagonal poles:
Shall have a means that will not allow the mast arm to be rotated by wind forces other than friction. This means shall be so fabricated so that the mast arm is rotatable. This feature shall be approved by the Engineer.

Transformer base:
In lieu of the transformer base the contractor may use the alternate signal standard base.

NORTH DAKOTA DEPARTMENT OF TRANSPORTATION

10-1-86

REVISIONS

DATE	CHANGE
12-01-88	Min clearance
01-21-94	Add 50 ft.
06-16-94	Leveling nuts
10-12-94	Handhole location
05-28-96	Mast arm cap
06-28-99	Sig head mt ht.
12-01-04	PE Stamp added

This document was originally issued and sealed by MARK S GAYDOS, Registration Number PE-4518, on 12/01/04 and the original document is stored at the North Dakota Department of Transportation