D-770-9

HIGH MAST LIGHTING

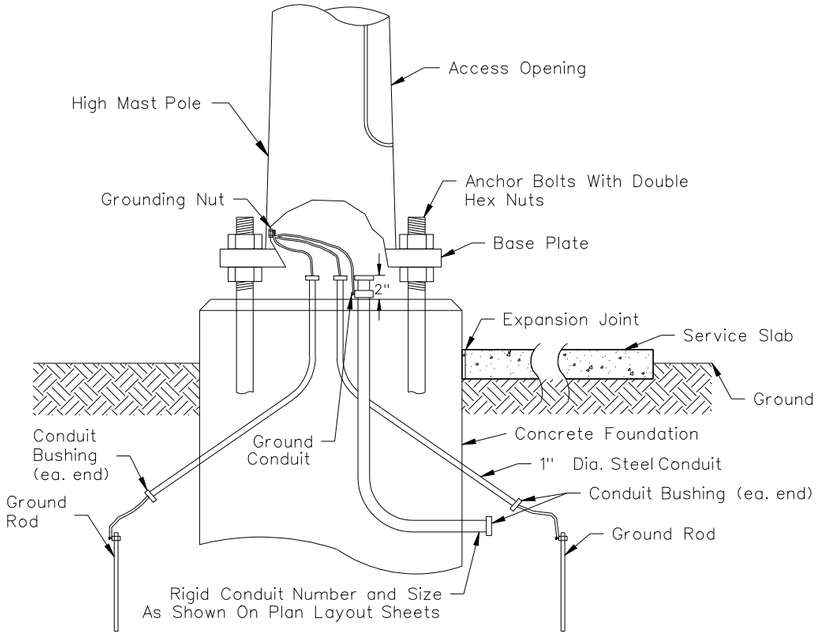

CONDUIT AND GROUNDING DETAIL AT BASE

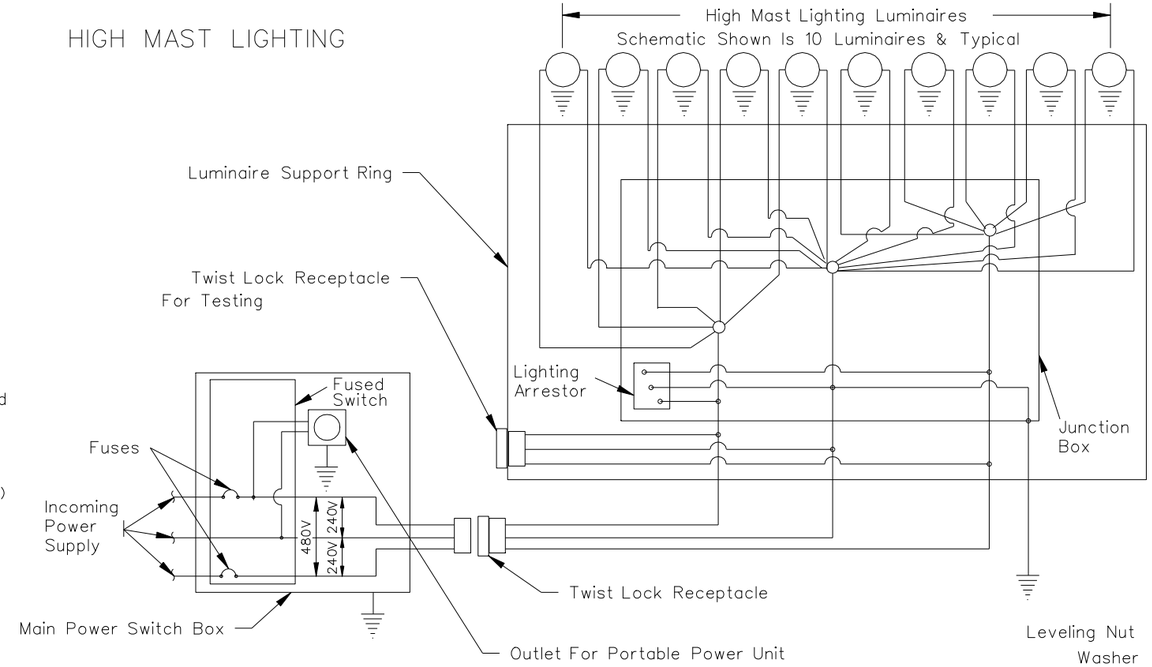

WIRING DIAGRAM

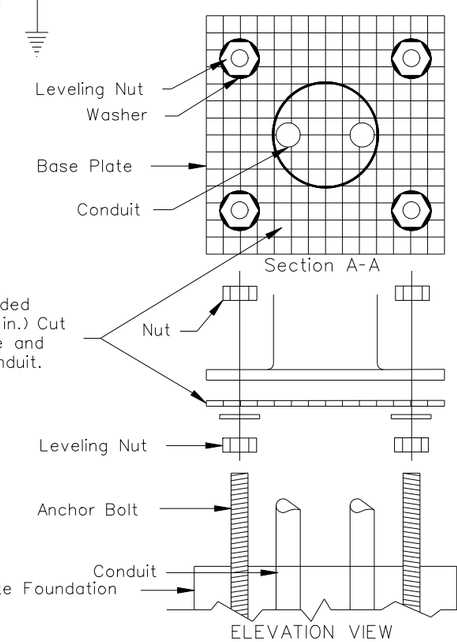

ELEVATION VIEW
RODENT SCREEN

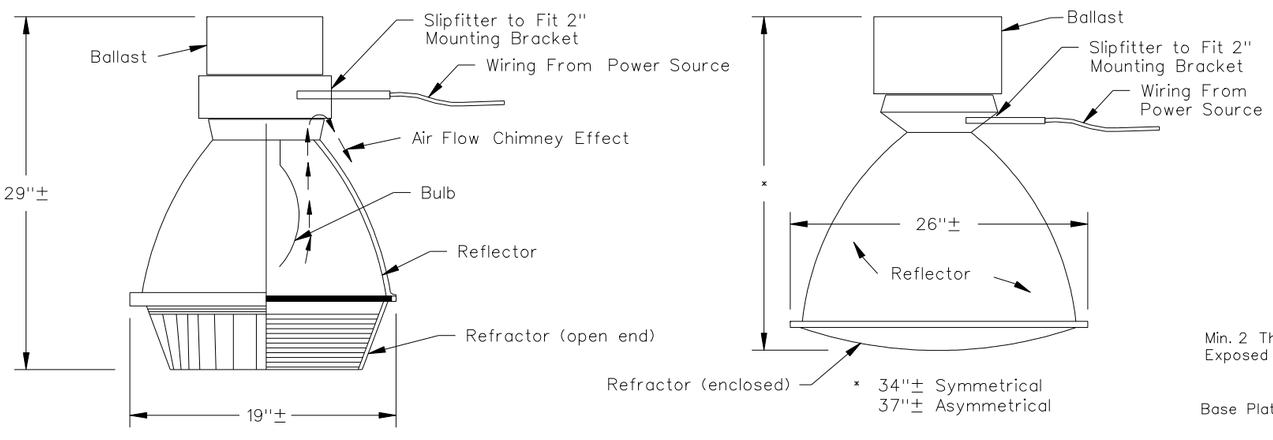

TYPICAL LUMINAIRE DETAILS
(1000 WATT)

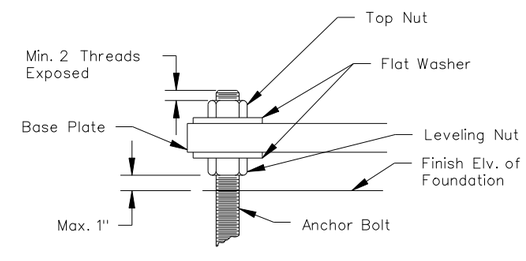

ANCHOR BOLT DETAIL

NORTH DAKOTA DEPARTMENT OF TRANSPORTATION	
07-15-94	
REVISIONS	
DATE	CHANGE
05-28-96	Rodent Screen
07-02-03	Layout revisions
12-01-04	PE Stamp added

This document was originally issued and sealed by MARK S GAYDOS, Registration Number PE-4518, on 12/01/04 and the original document is stored at the North Dakota Department of Transportation