TYPICAL GRADING AT OBSTRUCTION

WITH
FLARED W-BEAM GUARDRAIL
60 MPH DESIGN SPEED

D-764-20

Note:

The design traffic volumes (ADT) shall be as shown on title sheet under traffic forecast.

Where normal inslope is 4:1, the added fill shall be 4:1.

Where normal inslope is 6:1, the added fill shall be 6:1.

Note A: This area may have to be placed at flatter than 10:1 to provide the proper guardrail height.

W-BEAM GUARDRAIL DIMENSION TABLE

FOR FLARED GUARDRAIL SECTION

DESIGN TRAFFIC VOLUME	GUARDRAIL OFFSET DISTANCE	APPROACH SIDE: TAPERED GUARDRAIL DIMENSIONS A	B	END TERMINAL DIMENSIONS NON-FLARED C	D	END TERMINAL DIMENSIONS FLARED C1	D1	OPPOSITE SIDE: TAPERED GUARDRAIL DIMENSIONS A	B	END TERMINAL DIMENSIONS NON-FLARED C	D	END TERMINAL DIMENSIONS FLARED C1	D1
	FT	FT	FT	FT	FT	FT	FT	FT	FT	FT	FT	FT	FT
UNDER 250 ADT	10	62.4	2.4	49.9	6.2			25.0	0.0	50.0	0.0	49.8	4.0
	9	62.4	2.4	49.9	6.2			25.0	0.0	50.0	0.0	49.8	4.0
	8	74.9	3.4	49.9	7.2			25.0	0.0	50.0	0.0	49.8	4.0
	7	74.9	3.4	49.9	7.2			25.0	0.0	50.0	0.0	49.8	4.0
	6	86.4	4.3	49.9	8.2			25.0	0.0	50.0	0.0	49.8	4.0
	5	86.4	4.3	49.9	8.2			25.0	0.0	50.0	0.0	49.8	4.0
	4	99.8	5.3	49.9	9.1			25.0	0.0	50.0	0.0	49.8	4.0
	3	99.8	5.3	49.9	9.1			25.0	0.0	50.0	0.0	49.8	4.0
	2	112.3	6.2	49.9	10.1			25.0	0.0	50.0	0.0	49.8	4.0
	1	124.7	7.2	49.9	11.0			25.0	0.0	50.0	0.0	49.8	4.0
	0	124.7	7.2	49.9	11.0			25.0	0.0	50.0	0.0	49.8	4.0
250 to 800 ADT	10	74.9	3.4	49.9	7.2			25.0	0.0	50.0	0.0	49.8	4.0
	9	86.4	4.3	49.9	8.2			25.0	0.0	50.0	0.0	49.8	4.0
	8	86.4	4.3	49.9	8.2			25.0	0.0	50.0	0.0	49.8	4.0
	7	99.8	5.3	49.9	9.1			25.0	0.0	50.0	0.0	49.8	4.0
	6	99.8	5.3	49.9	9.1			25.0	0.0	50.0	0.0	49.8	4.0
	5	112.3	6.2	49.9	10.1			37.5	0.5	49.9	4.3		
	4	112.3	6.2	49.9	10.1			37.5	0.5	49.9	4.3		
	3	124.7	7.2	49.9	11.0			50.0	1.1	49.9	5.3		
	2	124.7	7.2	49.9	11.0			50.0	1.1	49.9	5.3		
	1	137.2	8.2	49.9	12.0			62.4	2.4	49.9	6.2		
	0	137.2	8.2	49.9	12.0			62.4	2.4	49.9	6.2		
800 to 2000 ADT	10	86.4	4.3	49.9	8.2			25.0	0.0	50.0	0.0	49.8	4.0
	9	99.8	5.3	49.9	9.1			25.0	0.0	50.0	0.0	49.8	4.0
	8	99.8	5.3	49.9	9.1			25.0	0.0	50.0	0.0	49.8	4.0
	7	112.3	6.2	49.9	10.1			25.0	0.0	50.0	0.0	49.8	4.0
	6	112.3	6.2	49.9	10.1			25.0	0.0	50.0	0.0	49.8	4.0
	5	124.7	7.2	49.9	11.0			37.5	0.5	49.9	4.3		
	4	124.7	7.2	49.9	11.0			50.0	1.1	49.9	5.3		
	3	137.2	8.2	49.9	12.0			62.4	2.4	49.9	6.2		
	2	137.2	8.2	49.9	12.0			62.4	2.4	49.9	6.2		
	1	149.7	9.1	49.9	12.9			74.9	3.4	49.9	7.2		
	0	149.7	9.1	49.9	12.9			74.9	3.4	49.9	7.2		
2000 to 6000 ADT	10	112.3	6.2	49.9	10.1			25.0	0.0	50.0	0.0	49.8	4.0
	9	112.3	6.2	49.9	10.1			25.0	0.0	50.0	0.0	49.8	4.0
	8	124.7	7.2	49.9	11.0			37.5	0.5	49.9	4.3		
	7	124.7	7.2	49.9	11.0			50.0	1.1	49.9	5.3		
	6	137.2	8.2	49.9	12.0			62.4	2.4	49.9	6.2		
	5	137.2	8.2	49.9	12.0			62.4	2.4	49.9	6.2		
	4	149.7	9.1	49.9	12.9			74.9	3.4	49.9	7.2		
	3	149.7	9.1	49.9	12.9			74.9	3.4	49.9	7.2		
	2	162.1	10.1	49.9	13.9			86.4	4.3	49.9	8.1		
	1	162.1	10.1	49.9	13.9			86.4	4.3	49.9	8.1		
	0	174.6	11.0	49.9	14.9			99.8	5.3	49.9	9.1		
OVER 6000 ADT	10	124.7	7.2	49.9	11.0			50.0	1.1	49.9	5.3		
	9	137.2	8.2	49.9	12.0			62.4	2.4	49.9	6.2		
	8	137.2	8.2	49.9	12.0			62.4	2.4	49.9	6.2		
	7	149.7	9.1	49.9	12.9			74.9	3.4	49.9	7.2		
	6	149.7	9.1	49.9	12.9			74.9	3.4	49.9	7.2		
	5	162.1	10.1	49.9	13.9			86.4	4.3	49.9	8.1		
	4	162.1	10.1	49.9	13.9			86.4	4.3	49.9	8.1		
	3	174.6	11.0	49.9	14.9			99.8	5.3	49.9	9.1		
	2	174.6	11.0	49.9	14.9			99.8	5.3	49.9	9.1		
	1	187.1	12.0	49.9	15.8			112.3	6.2	49.9	10.1		
	0	187.1	12.0	49.9	15.8			112.3	6.2	49.9	10.1		

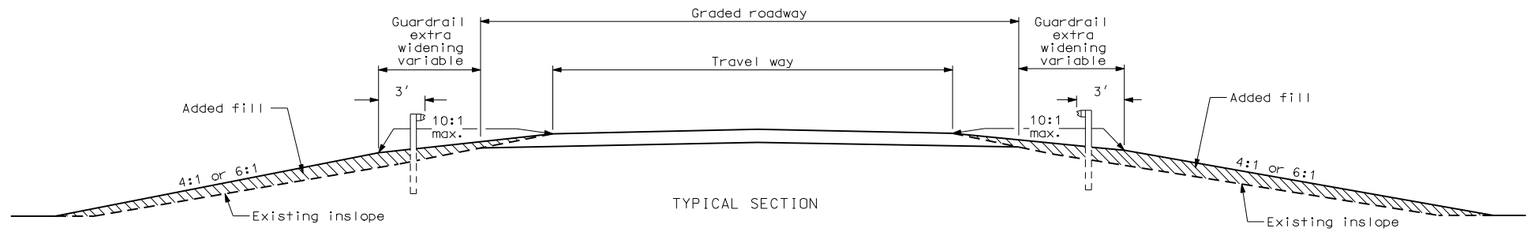

TYPICAL SECTION

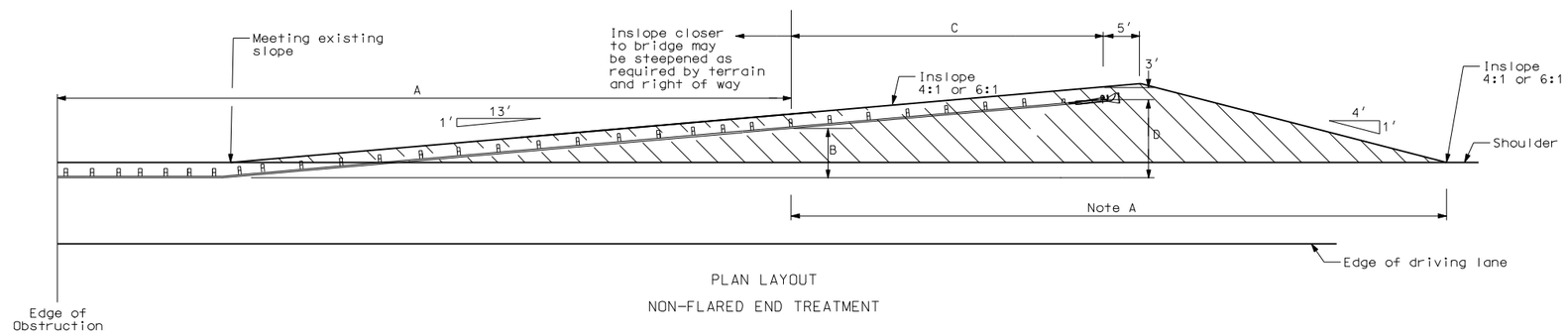

PLAN LAYOUT

NON-FLARED END TREATMENT

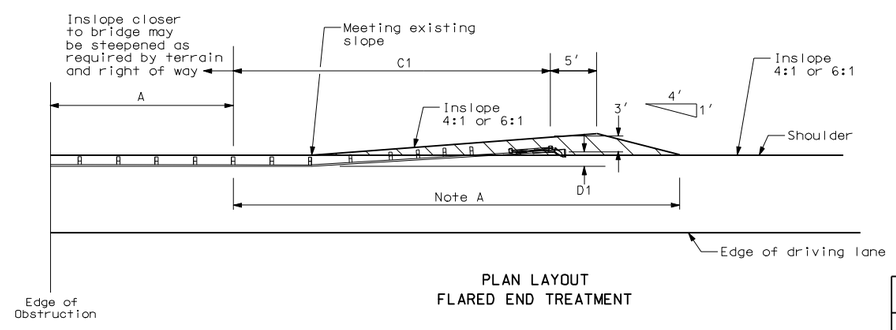

PLAN LAYOUT
FLARED END TREATMENT

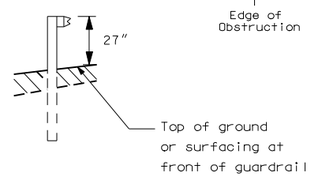

GUARDRAIL HEIGHT

NORTH DAKOTA DEPARTMENT OF TRANSPORTATION	
09-01-98	
REVISIONS	
DATE	CHANGE
10-29-98	Offset dimensions
12-21-00	Revised flared end treatment
12-17-03	Revised flare rate detail
12-01-04	PE Stamp added

This document was originally issued and sealed by MARK S GAYDOS, Registration Number PE-4518, on 12/01/04 and the original document is stored at the North Dakota Department of Transportation