D-764-18

TYPICAL GRADING AT OBSTRUCTION

WITH
FLARED W-BEAM GUARDRAIL
40 MPH DESIGN SPEED

Note:

The design traffic volumes (ADT) shall be as shown on title sheet under traffic forecast.

Where normal inslope is 4:1, the added fill shall be 4:1.

Where normal inslope is 6:1, the added fill shall be 6:1.

Note A: This area may have to be placed at flatter than 10:1 to provide the proper guardrail height.

W-BEAM GUARDRAIL DIMENSION TABLE

FOR FLARED GUARDRAIL SECTION

DESIGN TRAFFIC VOLUME	GUARDRAIL OFFSET DISTANCE	APPROACH SIDE: TAPERED GUARDRAIL DIMENSIONS		APPROACH SIDE: END TERMINAL DIMENSIONS NON-FLARED		APPROACH SIDE: END TERMINAL DIMENSIONS FLARED		OPPOSITE SIDE: TAPERED GUARDRAIL DIMENSIONS		OPPOSITE SIDE: END TERMINAL DIMENSIONS NON-FLARED		OPPOSITE SIDE: END TERMINAL DIMENSIONS FLARED	
		A	B	C	D	C1	D1	A	B	C	D	C1	D1
	FT	FT	FT	FT	FT	FT	FT	FT	FT	FT	FT	FT	FT
UNDER 250 ADT	10	25.0	0.0	50.0	0.0	49.8	4.0	25.0	0.0	50.0	0.0	49.8	4.0
	9	25.0	0.0	50.0	0.0	49.8	4.0	25.0	0.0	50.0	0.0	49.8	4.0
	8	25.0	0.0	50.0	0.0	49.8	4.0	25.0	0.0	50.0	0.0	49.8	4.0
	7	25.0	0.0	50.0	0.0	49.8	4.0	25.0	0.0	50.0	0.0	49.8	4.0
	6	25.0	0.0	50.0	0.0	49.8	4.0	25.0	0.0	50.0	0.0	49.8	4.0
	5	25.0	0.0	50.0	0.0	49.8	4.0	25.0	0.0	50.0	0.0	49.8	4.0
	4	25.0	0.0	50.0	0.0	49.8	4.0	25.0	0.0	50.0	0.0	49.8	4.0
	3	25.0	0.0	50.0	0.0	49.8	4.0	25.0	0.0	50.0	0.0	49.8	4.0
	2	25.0	0.0	50.0	0.0	49.8	4.0	25.0	0.0	50.0	0.0	49.8	4.0
	1	25.0	0.0	50.0	0.0	49.8	4.0	25.0	0.0	50.0	0.0	49.8	4.0
	0	25.0	0.0	50.0	0.0	49.8	4.0	25.0	0.0	50.0	0.0	49.8	4.0
250 to 800 ADT	10	25.0	0.0	50.0	0.0	49.8	4.0	25.0	0.0	50.0	0.0	49.8	4.0
	9	25.0	0.0	50.0	0.0	49.8	4.0	25.0	0.0	50.0	0.0	49.8	4.0
	8	25.0	0.0	50.0	0.0	49.8	4.0	25.0	0.0	50.0	0.0	49.8	4.0
	7	25.0	0.0	50.0	0.0	49.8	4.0	25.0	0.0	50.0	0.0	49.8	4.0
	6	25.0	0.0	50.0	0.0	49.8	4.0	25.0	0.0	50.0	0.0	49.8	4.0
	5	25.0	0.0	50.0	0.0	49.8	4.0	25.0	0.0	50.0	0.0	49.8	4.0
	4	25.0	0.0	50.0	0.0	49.8	4.0	25.0	0.0	50.0	0.0	49.8	4.0
	3	25.0	0.0	50.0	0.0	49.8	4.0	25.0	0.0	50.0	0.0	49.8	4.0
	2	25.0	0.0	50.0	0.0	49.8	4.0	25.0	0.0	50.0	0.0	49.8	4.0
	1	25.0	0.0	50.0	0.0	49.8	4.0	25.0	0.0	50.0	0.0	49.8	4.0
	0	25.0	0.0	50.0	0.0	49.8	4.0	25.0	0.0	50.0	0.0	49.8	4.0
800 to 2000 ADT	10	25.0	0.0	50.0	0.0	49.8	4.0	25.0	0.0	50.0	0.0	49.8	4.0
	9	25.0	0.0	50.0	0.0	49.8	4.0	25.0	0.0	50.0	0.0	49.8	4.0
	8	25.0	0.0	50.0	0.0	49.8	4.0	25.0	0.0	50.0	0.0	49.8	4.0
	7	25.0	0.0	50.0	0.0	49.8	4.0	25.0	0.0	50.0	0.0	49.8	4.0
	6	25.0	0.0	50.0	0.0	49.8	4.0	25.0	0.0	50.0	0.0	49.8	4.0
	5	37.5	0.7	49.7	6.2			25.0	0.0	50.0	0.0	49.8	4.0
	4	37.5	0.7	49.7	6.2			25.0	0.0	50.0	0.0	49.8	4.0
	3	49.9	2.5	49.7	8.0			25.0	0.0	50.0	0.0	49.8	4.0
	2	49.9	2.5	49.7	8.0			25.0	0.0	50.0	0.0	49.8	4.0
	1	62.2	4.2	49.7	9.8			25.0	0.0	50.0	0.0	49.8	4.0
	0	62.2	4.2	49.7	9.8			25.0	0.0	50.0	0.0	49.8	4.0
2000 to 6000 ADT	10	25.0	0.0	50.0	0.0	49.8	4.0	25.0	0.0	50.0	0.0	49.8	4.0
	9	25.0	0.0	50.0	0.0	49.8	4.0	25.0	0.0	50.0	0.0	49.8	4.0
	8	25.0	0.0	50.0	0.0	49.8	4.0	25.0	0.0	50.0	0.0	49.8	4.0
	7	25.0	0.0	50.0	0.0	49.8	4.0	25.0	0.0	50.0	0.0	49.8	4.0
	6	37.5	0.7	49.7	6.2			25.0	0.0	50.0	0.0	49.8	4.0
	5	37.5	0.7	49.7	6.2			25.0	0.0	50.0	0.0	49.8	4.0
	4	49.9	2.5	49.7	8.0			25.0	0.0	50.0	0.0	49.8	4.0
	3	49.9	2.5	49.7	8.0			25.0	0.0	50.0	0.0	49.8	4.0
	2	62.2	4.2	49.7	9.8			25.0	0.0	50.0	0.0	49.8	4.0
	1	62.2	4.2	49.7	9.8			25.0	0.0	50.0	0.0	49.8	4.0
	0	74.6	6.0	49.8	11.5			25.0	0.0	50.0	0.0	49.8	4.0
OVER 6000 ADT	10	25.0	0.0	50.0	0.0	49.8	4.0	25.0	0.0	50.0	0.0	49.8	4.0
	9	25.0	0.0	50.0	0.0	49.8	4.0	25.0	0.0	50.0	0.0	49.8	4.0
	8	37.5	0.7	49.7	6.2			25.0	0.0	50.0	0.0	49.8	4.0
	7	37.5	0.7	49.7	6.2			25.0	0.0	50.0	0.0	49.8	4.0
	6	49.9	2.5	49.7	8.0			25.0	0.0	50.0	0.0	49.8	4.0
	5	49.9	2.5	49.7	8.0			25.0	0.0	50.0	0.0	49.8	4.0
	4	62.2	4.2	49.7	9.8			25.0	0.0	50.0	0.0	49.8	4.0
	3	62.2	4.2	49.7	9.8			25.0	0.0	50.0	0.0	49.8	4.0
	2	74.6	6.0	49.8	11.5			25.0	0.0	50.0	0.0	49.8	4.0
	1	74.6	6.0	49.8	11.5			25.0	0.0	50.0	0.0	49.8	4.0
	0	74.6	6.0	49.8	11.5			25.0	0.0	50.0	0.0	49.8	4.0

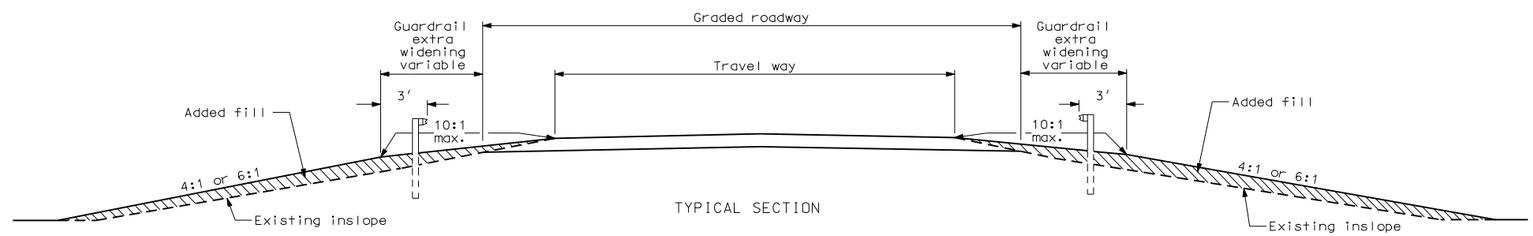

TYPICAL SECTION

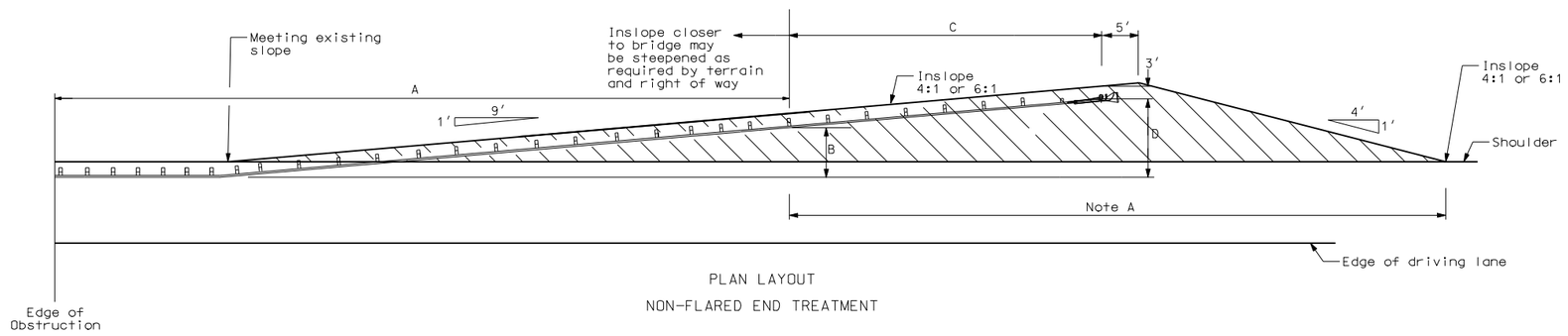

PLAN LAYOUT

NON-FLARED END TREATMENT

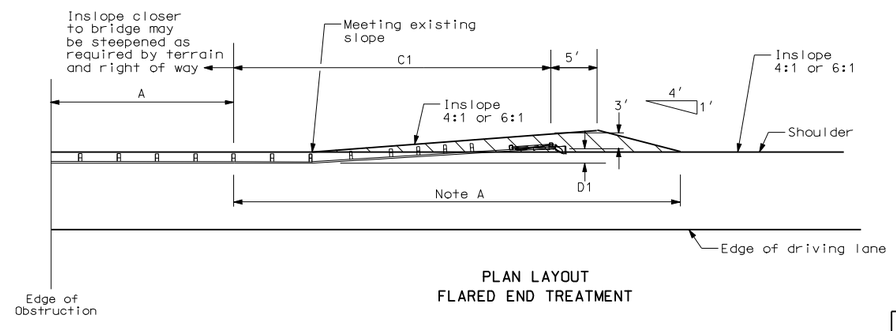

PLAN LAYOUT
FLARED END TREATMENT

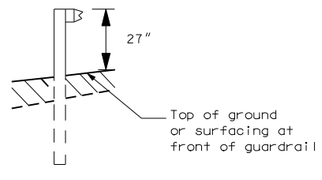

GUARDRAIL HEIGHT

NORTH DAKOTA DEPARTMENT OF TRANSPORTATION	
09-01-98	
REVISIONS	
DATE	CHANGE
10-29-98	Offset dimensions
12-21-00	Revised flared end treatment
12-17-03	Revised flare rate detail
12-01-04	PE Stamp added

This document was originally issued and sealed by MARK S GAYDOS, Registration Number PE-4518, on 12/01/04 and the original document is stored at the North Dakota Department of Transportation