W-BEAM GUARDRAIL WITH APPROACHES NEAR BRIDGE FOR LOW VOLUME LOW SPEED ROADWAYS

D-764-3B

NOTES:

1. No washers are used on the 5/8" guardrail bolts connecting the rail to the Controlled Release Terminal (CRT) posts.
2. The rail is not bolted to the CRT post at the center of the nose as shown.
3. The curved guardrail section shall be shop bent.
4. The Special Anchor has not been tested as a crashworthy end treatment for approaching traffic on the intersecting roadway. Therefore it's use shall be limited to driveways or service roadways paralleling drainage facilities.
5. Low Volume is defined as 750 ADT or less. Low Speed is defined as design speeds of 55 mph or less.

RADIUS	NO. OF CRT POSTS	REQUIRED AREA FREE OF FIXED OBJECTS	
		L	W
8' - 6"	4	25'	15'
17' - 0"	6	30'	15'
25' - 6"	8	40'	20'
35' - 0"	10	50'	20'

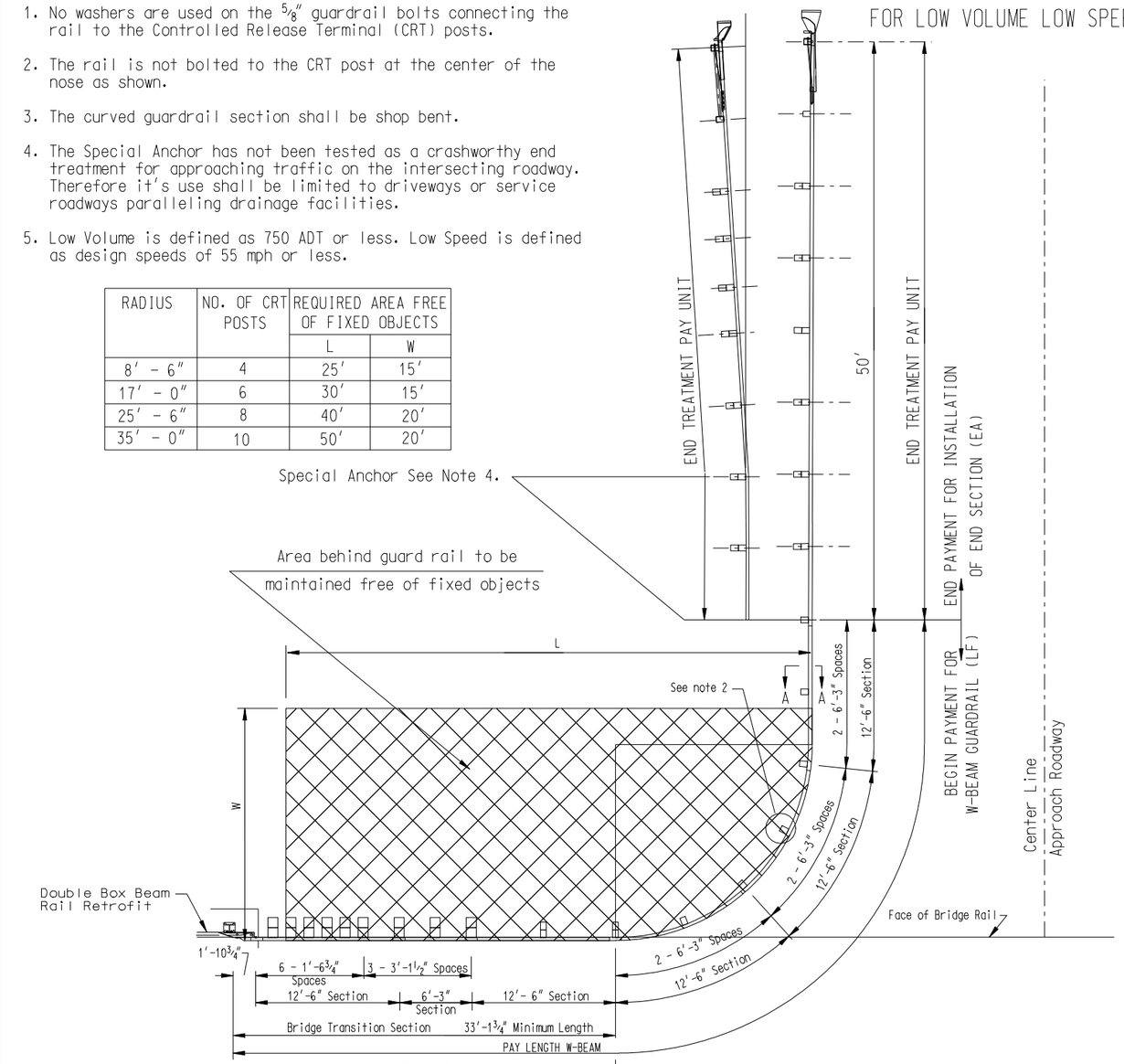

MAIN HIGHWAY

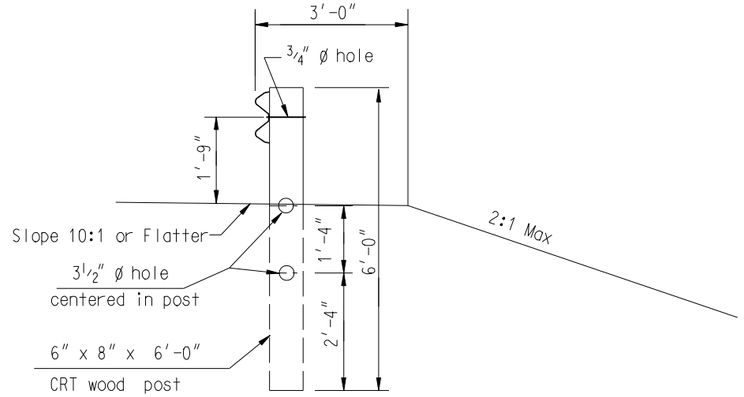

SECTION A-A

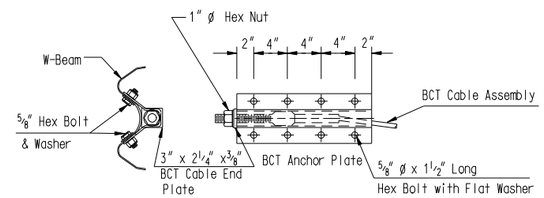

SECTION B-B

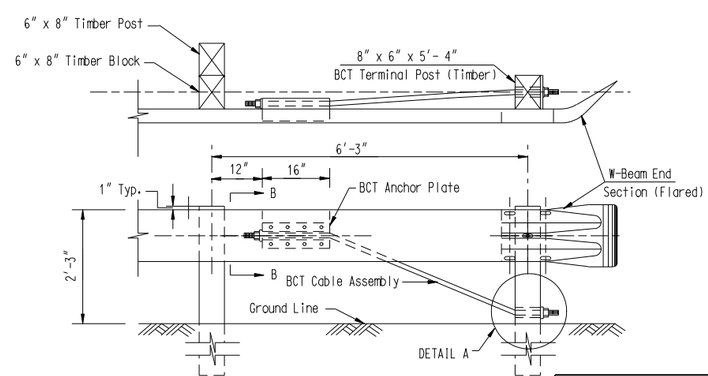

SPECIAL ANCHOR

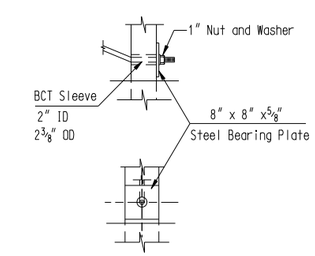

DETAIL A

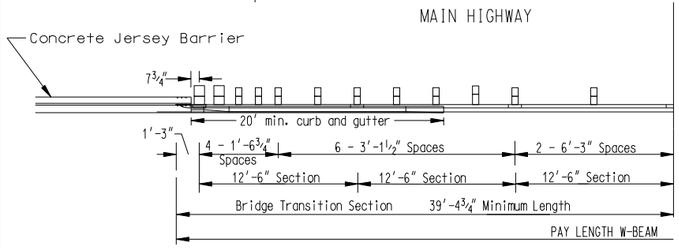

MAIN HIGHWAY

NORTH DAKOTA DEPARTMENT OF TRANSPORTATION	
02-10-00	
REVISIONS	
DATE	CHANGE
04-09-04	General revisions
12-01-04	PE Stamp added

This document was originally issued and sealed by MARK S GAYDOS, Registration Number PE-4518, on 12/01/04 and the original document is stored at the North Dakota Department of Transportation