MODIFIED ECCENTRIC LOADER TERMINAL

D-764-2

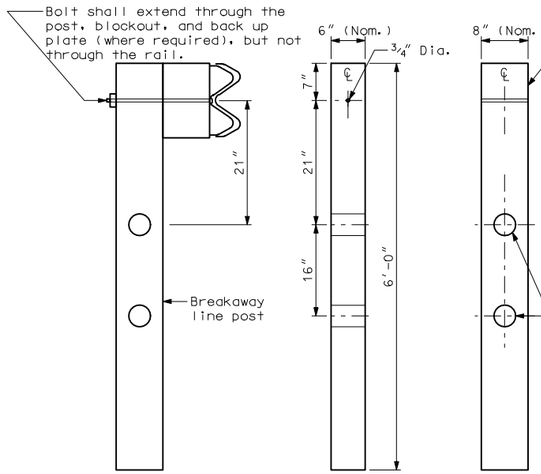

SECTION A-A

BREAKAWAY LINE POST

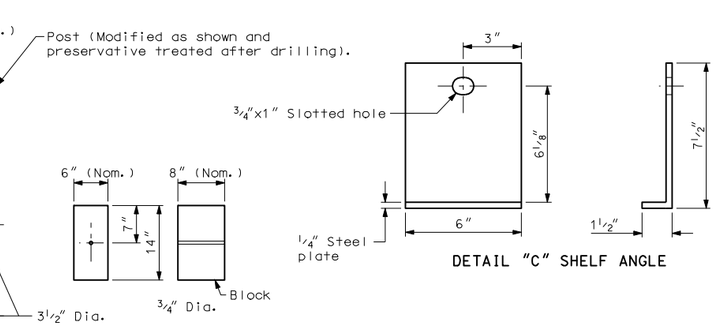

WOOD BLOCK

DETAIL "C" SHELF ANGLE

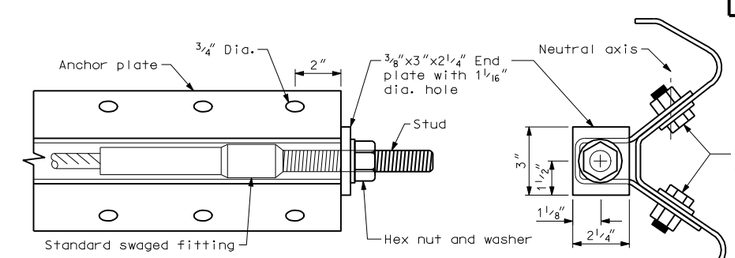

ANCHOR PLATE ASSEMBLY DETAILS

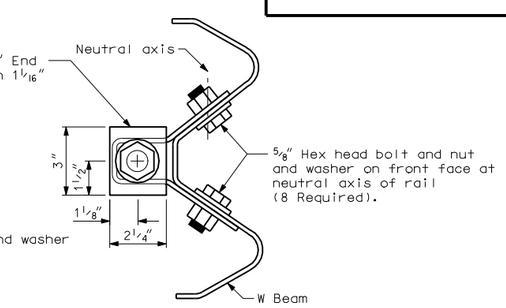

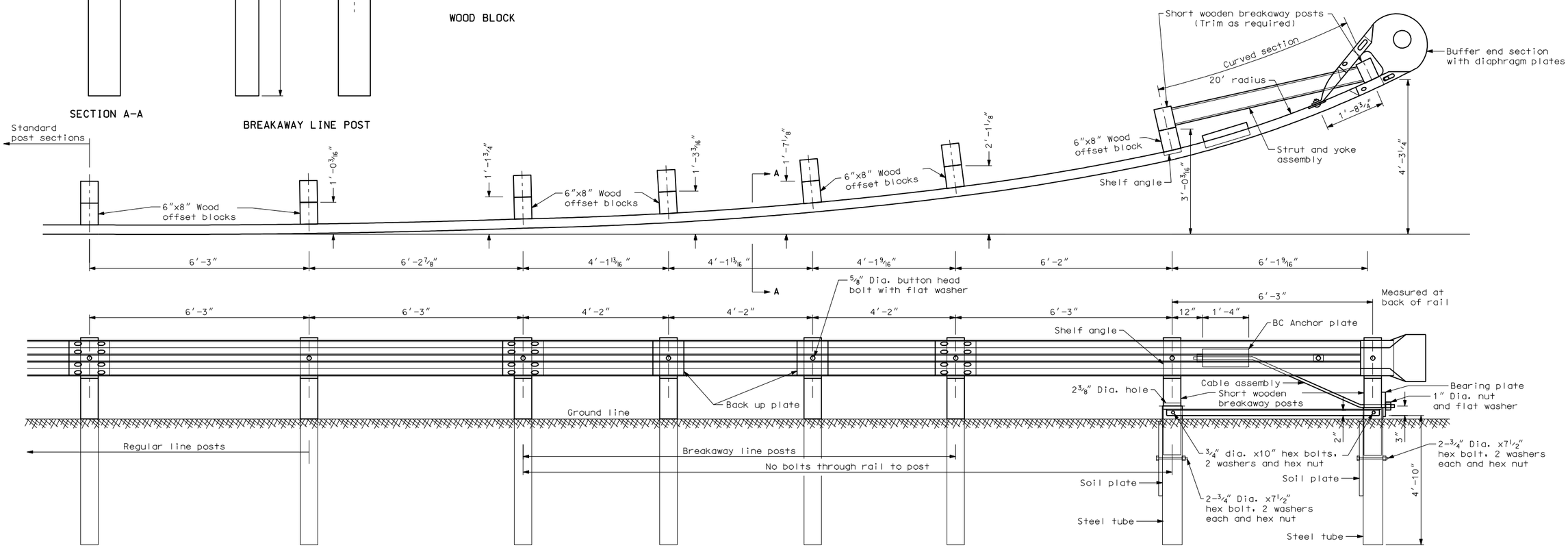

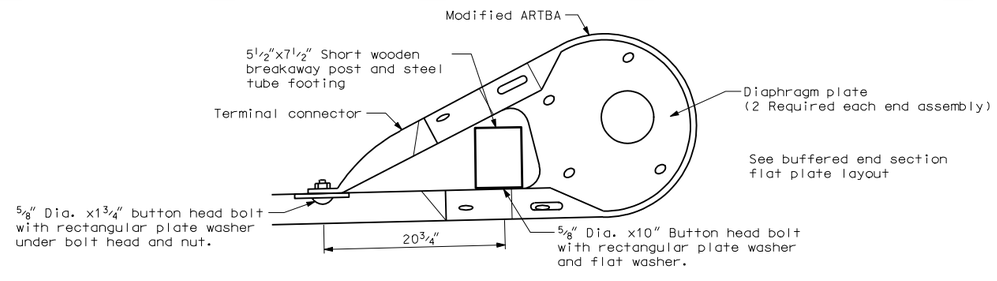

BUFFERED END ASSEMBLY

NOTE:

Steel tube anchor and short wood post assembly:
The contractor shall install the steel tube and soil plate anchor by driving the anchor into the soil. The short wooden post shall be pushed into the steel tube anchor by hand and shall not be driven. It may be necessary to round the square edges of the wood post so they fit the rounding of the 8"x6" steel tube. The inside of the steel tube anchor shall be greased before installation of the wooden post to facilitate installation and removal.

NORTH DAKOTA DEPARTMENT OF TRANSPORTATION	
09-01-98	
REVISIONS	
DATE	CHANGE
12-01-04	PE Stamp added

This document was originally issued and sealed by MARK S GAYDOS, Registration Number PE-4518, on 12/01/04 and the original document is stored at the North Dakota Department of Transportation