D-754-39

SIGN PUNCHING, STRINGER AND SUPPORT LOCATION DETAILS
REGULATORY, WARNING, AND GUIDE SIGNS

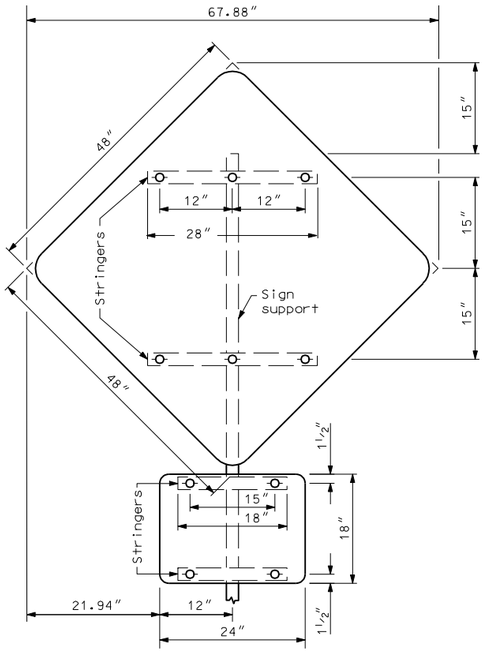

1 Post

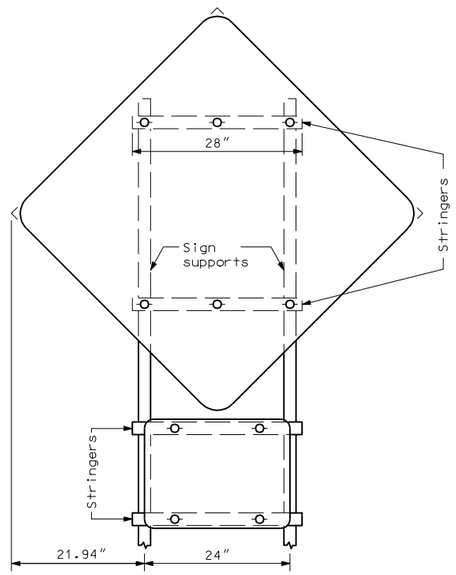

2 Posts

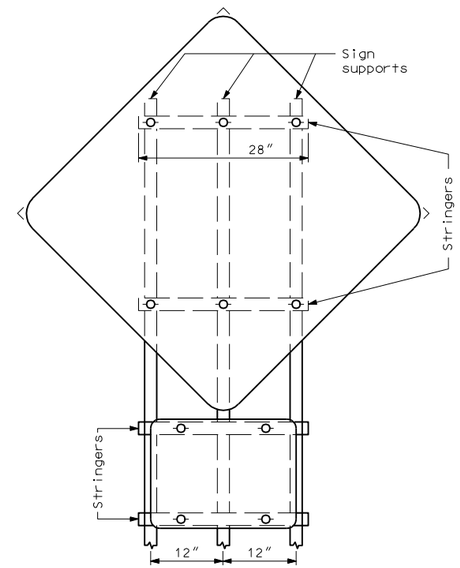

3 Posts

ASSEMBLY NO. 58

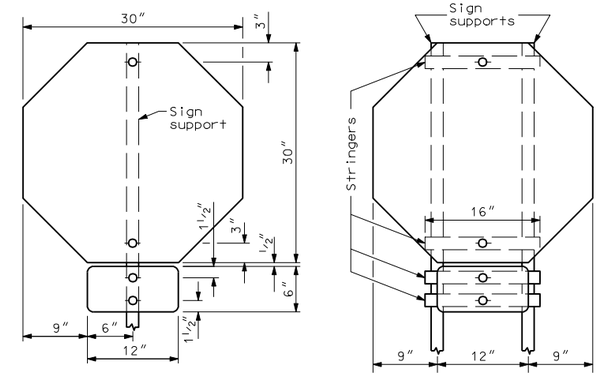

1 Post

2 Posts

ASSEMBLY NO. 59

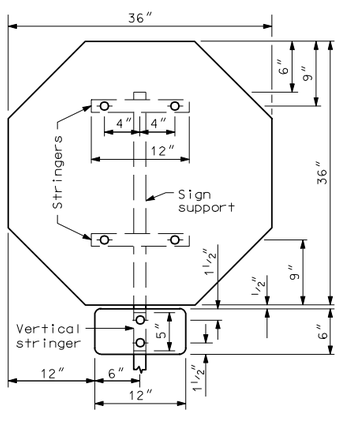

1 Post

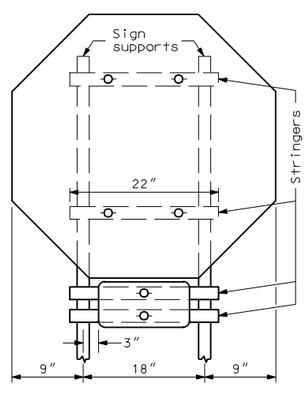

2 Posts

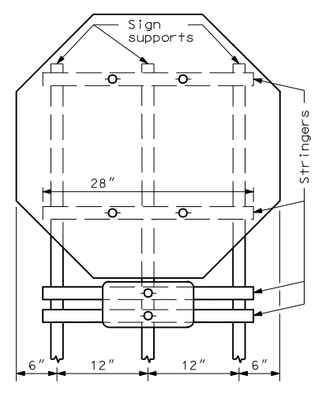

3 Posts

ASSEMBLY NO. 60

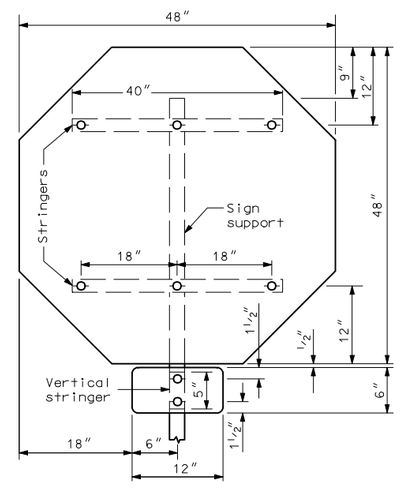

1 Post

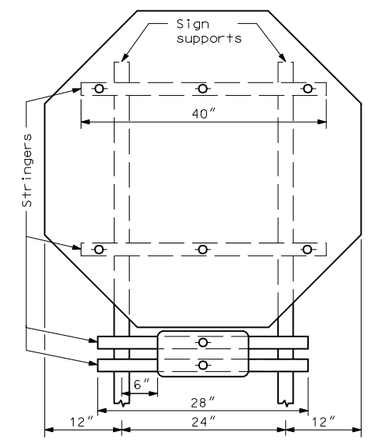

2 Posts

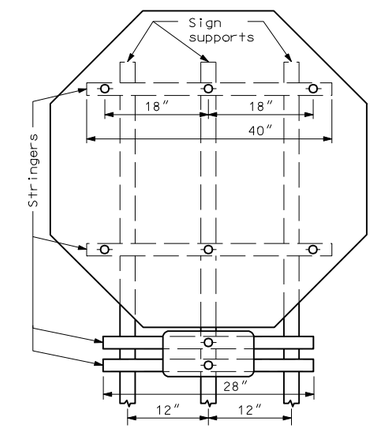

3 Posts

ASSEMBLY NO. 61

NOTES:

1. See standard D-754-24 for mounting details.
2. The minimum sign backing material thickness shall be 0.100 inch.
3. Perforated square tube stringer shall be 1½″ x 1½″.
4. All holes shall be punched round for ⅜″ bolt.

NORTH DAKOTA DEPARTMENT OF TRANSPORTATION	
10-1-86	
REVISIONS	
DATE	CHANGE
05-01-92	General revisions
05-21-01	Layout revision
10-13-04	Note revisions
12-01-04	PE Stamp added

This document was originally issued and sealed by MARK S GAYDOS, Registration Number PE-4518, on 12/01/04 and the original document is stored at the North Dakota Department of Transportation