D-754-26

SIGN PUNCHING, STRINGER AND SUPPORT LOCATION DETAILS
REGULATORY, WARNING, AND GUIDE SIGNS

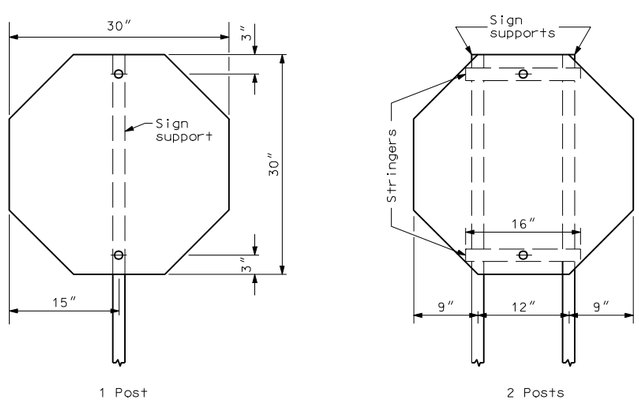

ASSEMBLY NO. 1

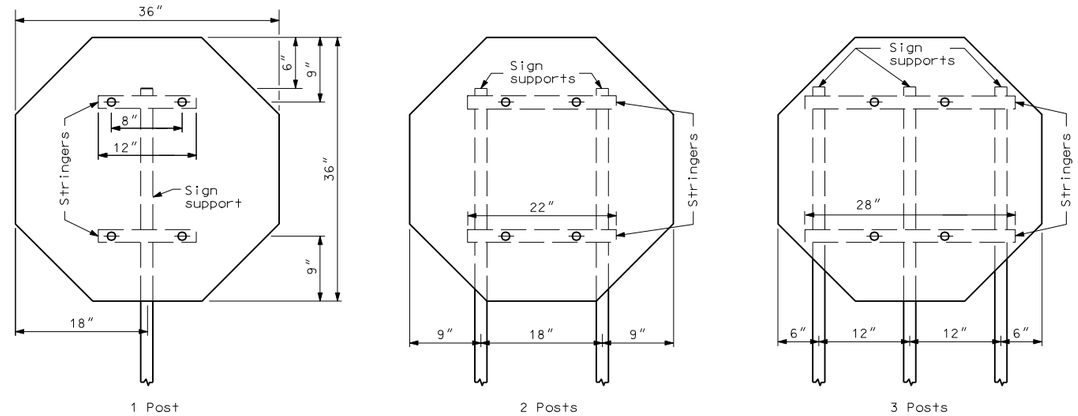

ASSEMBLY NO. 2

NOTES:

1. See standard D-754-24 for mounting details.
2. The minimum sign backing material thickness shall be 0.100 inch.
3. Perforated square tube stringer shall be $1\frac{1}{2}''$ x $1\frac{1}{2}''$.
4. All holes shall be punched round for $\frac{3}{8}''$ bolt.

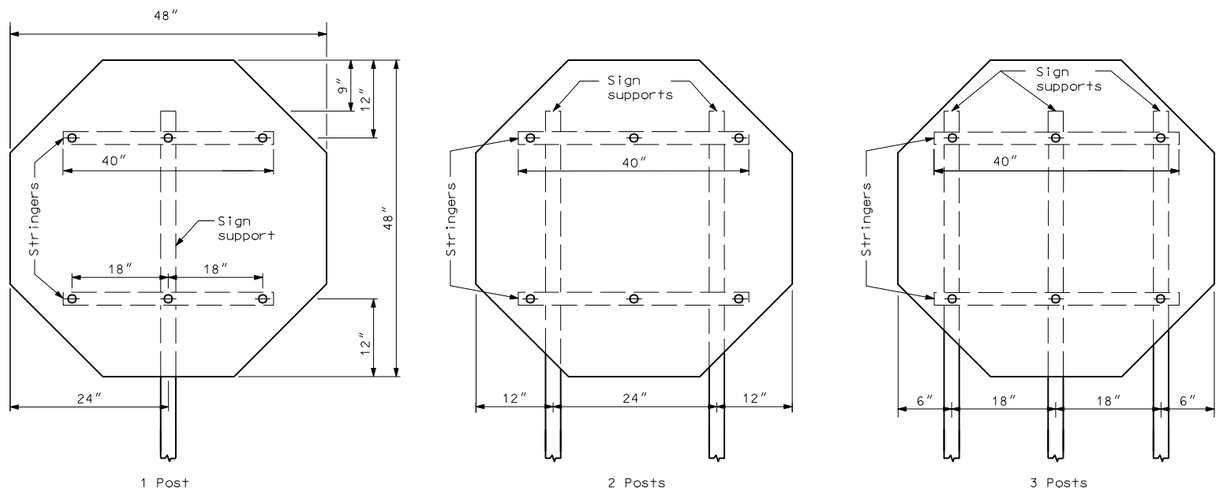

ASSEMBLY NO. 3

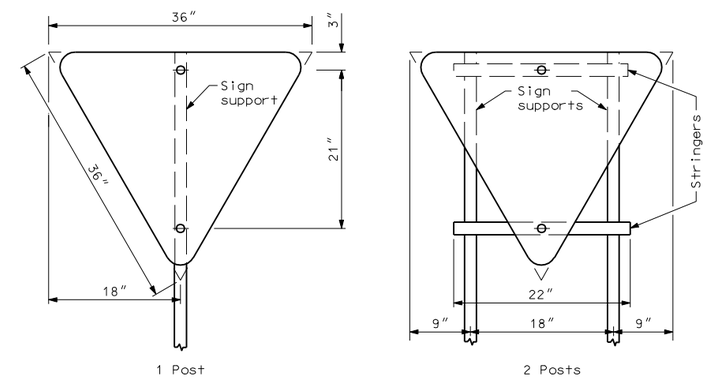

ASSEMBLY NO. 4

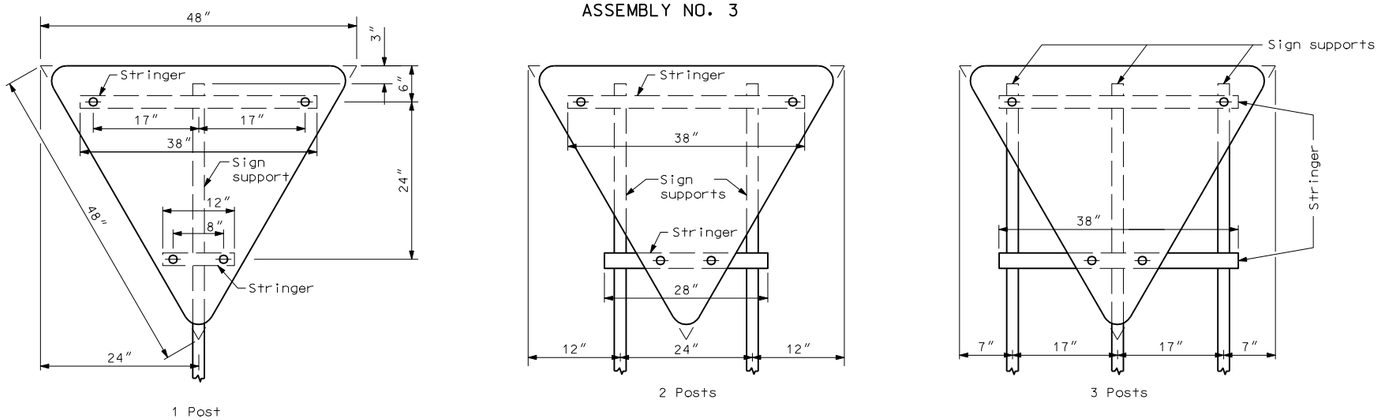

ASSEMBLY NO. 5

NORTH DAKOTA DEPARTMENT OF TRANSPORTATION	
10-1-86	
REVISIONS	
DATE	CHANGE
05-01-92	General revisions
03-21-01	Layout revision
04-02-01	Note revision
10-13-04	Note revisions
12-01-04	PE Stamp added

This document was originally issued and sealed by MARK S GAYDOS, Registration Number PE-4518, on 12/01/04 and the original document is stored at the North Dakota Department of Transportation