SANITARY MANHOLE

D-722-4

Casting frame and cover
Neenah Foundry Co. R-1726A,
Municipal Casting Inc. 304 & 304A
or approved equal.

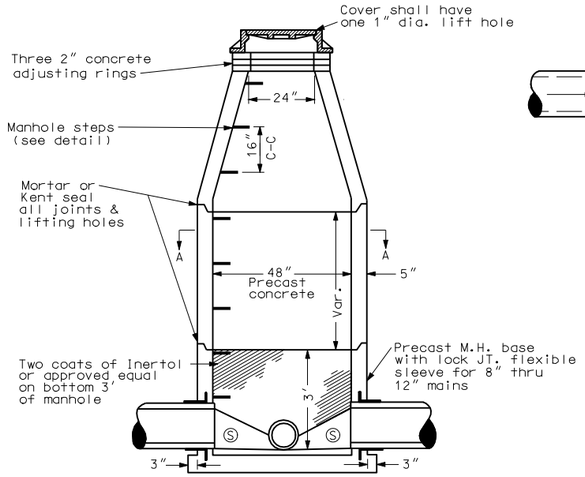

SANITARY MANHOLE
FOR 8", 10" & 12" MAINS

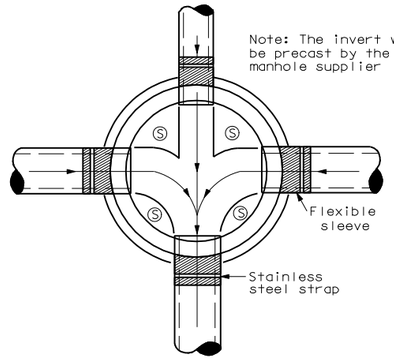

SECTION A -A

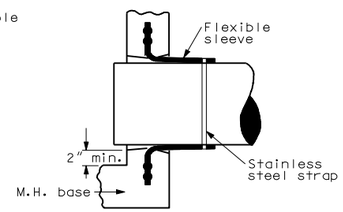

DETAIL OF MANHOLE SLEEVE

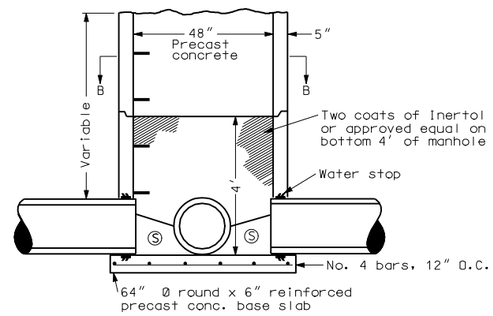

SANITARY MANHOLE
FOR 15" MAINS & LARGER

Ⓢ Shelf

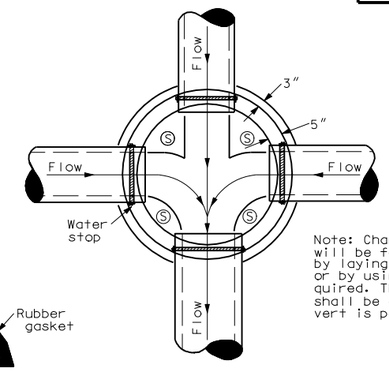

Note: Channels in M.H. bottoms will be formed with sewer pipe by laying pipe straight through or by using bend or tees as required. The top half of the pipe shall be cut out after the invert is poured with concrete.

Section B - B

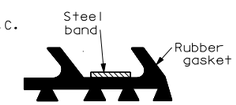

M.H. WATER STOP

Note: Approved manufacturers of water stop are Certain-teed, Fernco, & Armco.

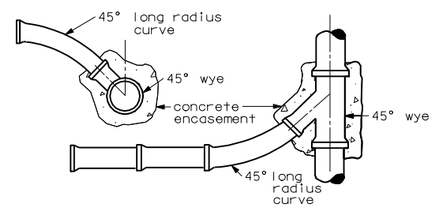

LATERAL CONNECTIONS
SANITARY SEWER

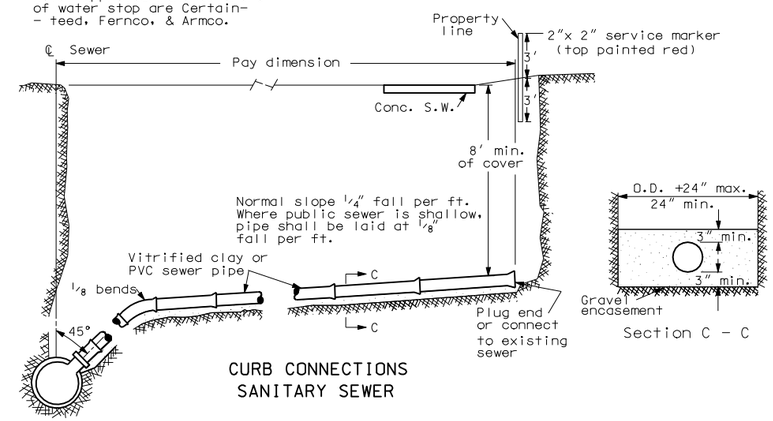

Section C - C

CURB CONNECTIONS
SANITARY SEWER

Note: Top of M.H. shall be a 4' cone with std. casting frame & cover

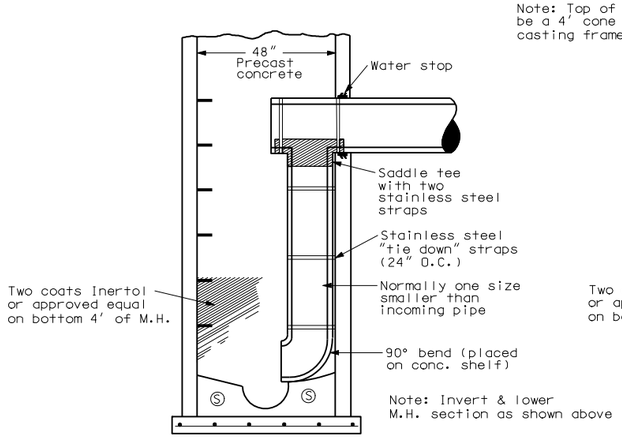

INTERIOR DROP CONNECTION
SANITARY MANHOLE

Note: The interior drop connection as shown, will only be used with the expressed consent of the engineer.

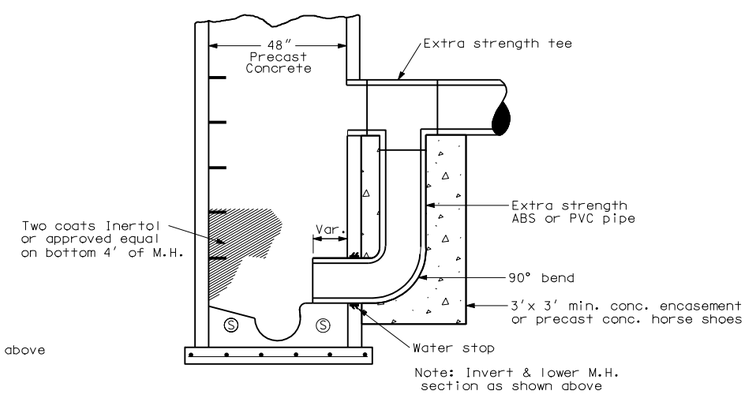

EXTERIOR DROP CONNECTION
SANITARY MANHOLE

The drop connection shall be used for a sewer entering a M.H. at an elev. 24" or more above the manhole invert.

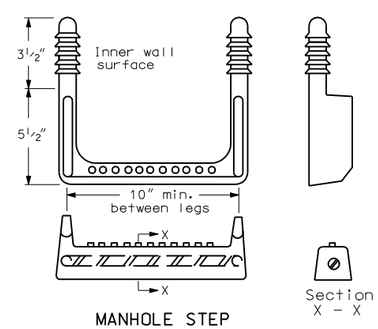

MANHOLE STEP

Step shall be completely encased in a corrosion resistant rubber, which will resist deterioration from hydrogen sulphide or other chemicals and gases encountered in M.H. application. Also step shall have a vertical resistance of 400 lbs. & pullout resistance of 1000 lbs. such as, the wedg-lok step by Delta Pipe Products or approved equal.

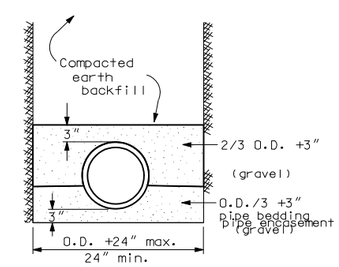

TRENCH BACKFILL

NORTH DAKOTA DEPARTMENT OF TRANSPORTATION	
10-1-86	
REVISIONS	
DATE	CHANGE
03-07-01	Layout revision
12-01-04	PE Stamp added

This document was originally issued and sealed by MARK S GAYDOS, Registration Number PE-4518, on 12/01/04 and the original document is stored at the North Dakota Department of Transportation