SLOTTED SECTION FOR REINFORCED CONCRETE PIPE

D-714-15

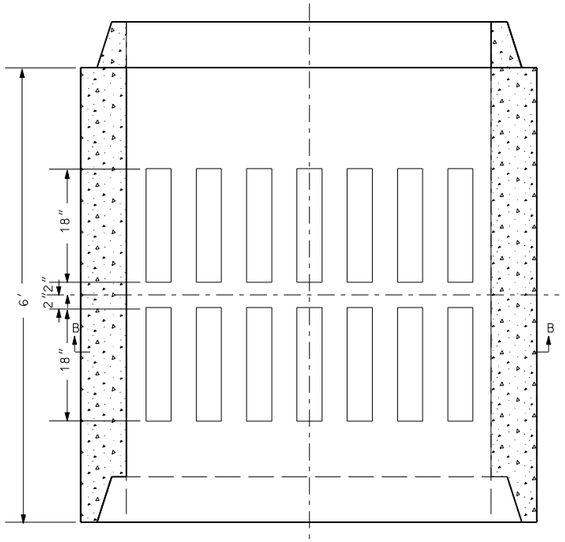

7 Slot section

PLAN VIEW

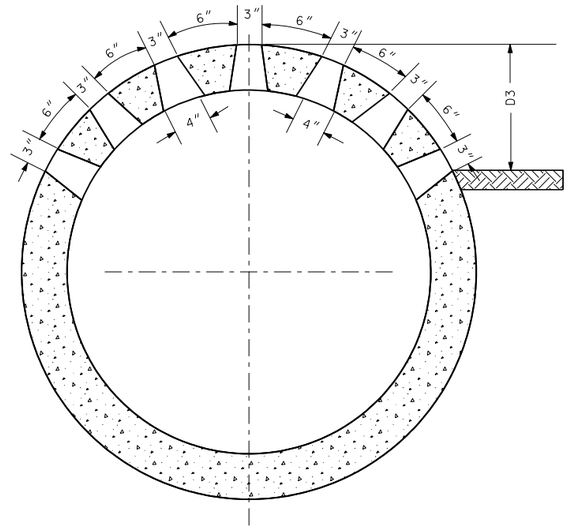

7 Slot section

SECTION B-B

		3 Slot	5 Slot	7 Slot
T	DIA.	D1	D2	D3
2"	12"	6"		
2 1/4	15	5.1		
2 1/2	18	4.5		
2 3/4	21	3.9	11.9"	
3	24	3.5	11.0	
3 1/4	27	3.2	10.2	
3 1/2	30	2.9	9.4	
4	36	2.5	8.1	16.0"
4 1/2	42	2.1	7.1	14.3
5	48	1.9	6.3	12.9
6	60	1.5	5.2	10.7
7	72	1.3	4.4	9.1
7 1/2	78	1.2	4.1	8.5
8	84	1.1	3.8	7.9

Slotted pipe which projects more than 8" above the ditch bottom is a fixed hazard, therefore we will limit the projection to a maximum of 8". Not a separate pay item. Included in the length of RCP shown on the plan and profile sheets and paid for as RCP size and class shown on plan and profile sheets.

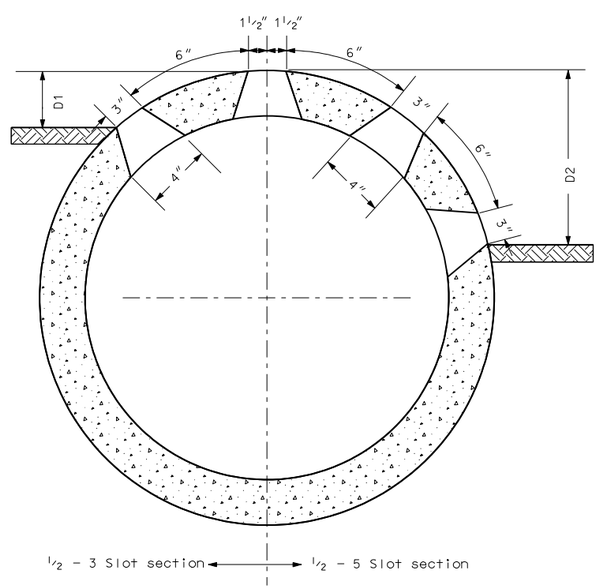

SECTION A-A

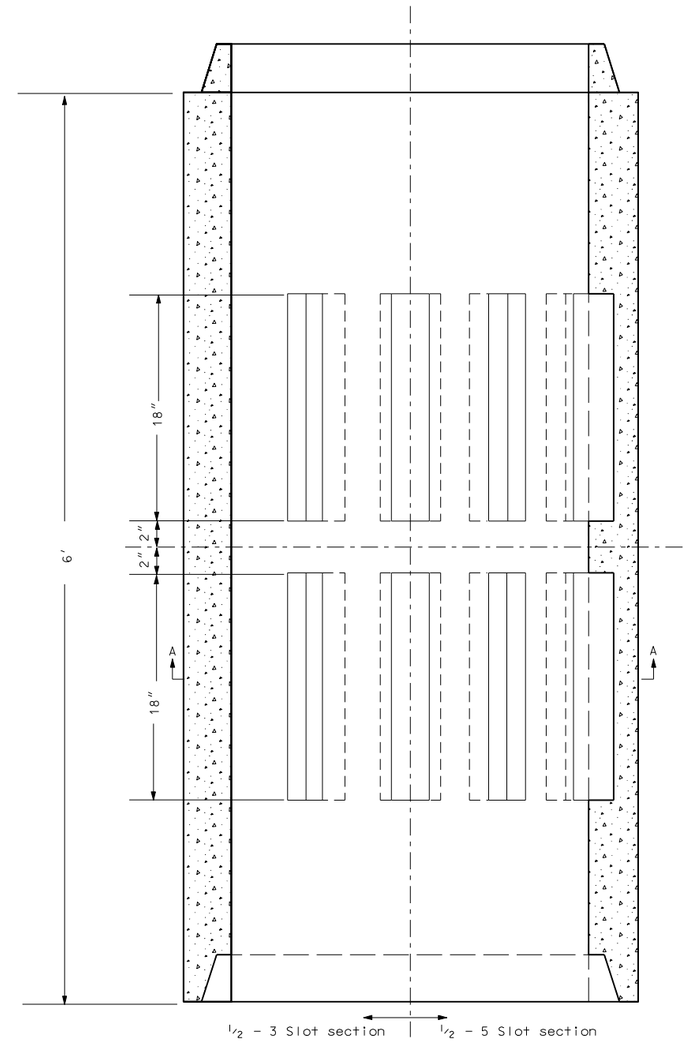

PLAN VIEW

NORTH DAKOTA DEPARTMENT OF TRANSPORTATION	
12-01-88	
REVISIONS	
DATE	CHANGE
12-01-04	PE Stamp added

This document was originally issued and sealed by MARK S GAYDOS, Registration Number PE-4518, on 12/01/04 and the original document is stored at the North Dakota Department of Transportation