5′ X 7′ STD. SECTIONAL CONCRETE STOCK PASS

D-714-10

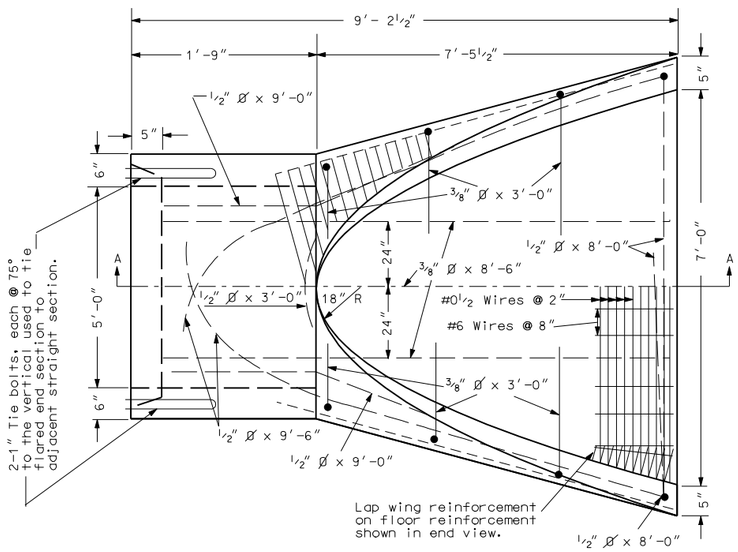

HALF SECTION

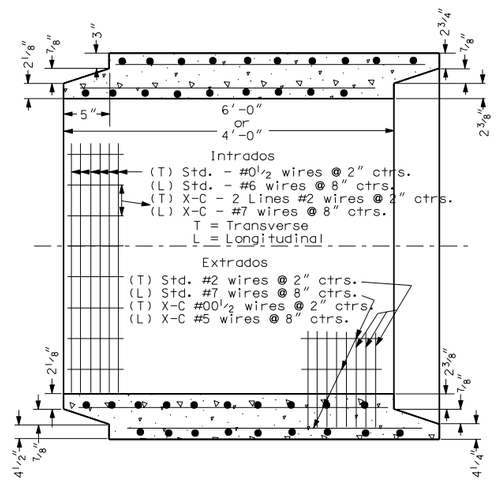

LONGITUDINAL SECTION ON C

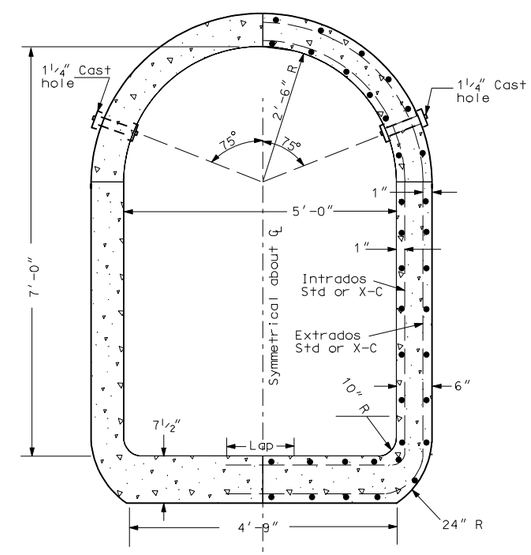

TRANSVERSE SECTION

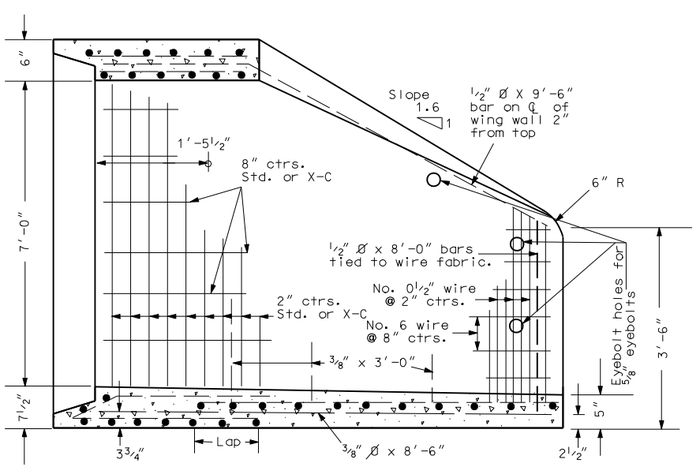

SECTION A-A

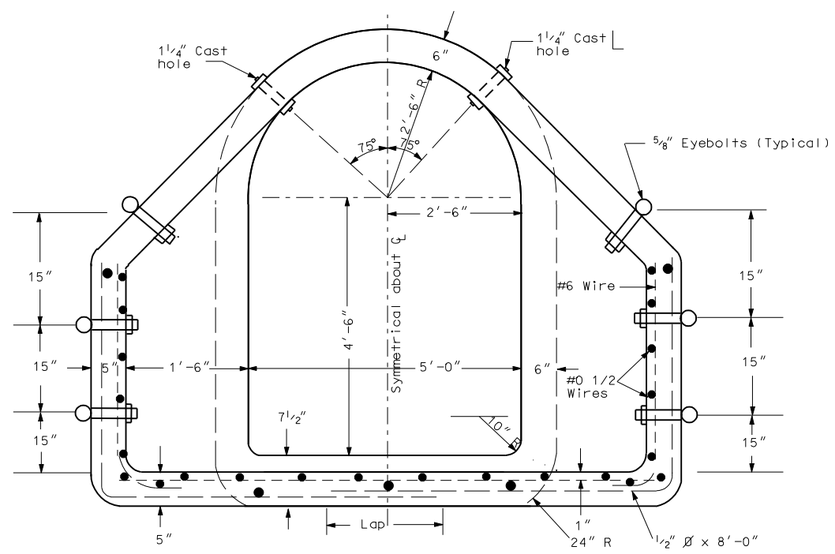

END VIEW

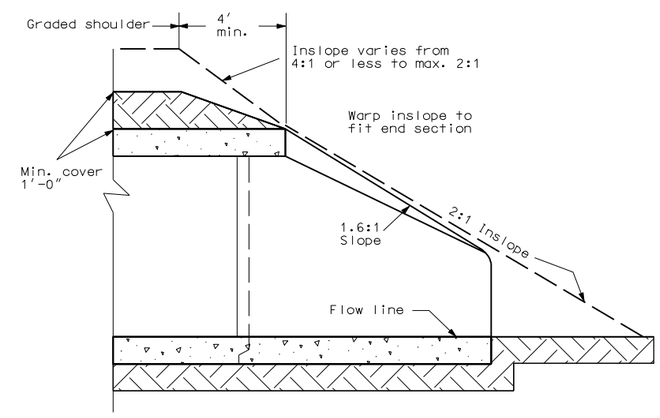

ESTIMATED WEIGHT:

Wt. of 6′ barrel section = 11,520 lbs.

Wt. at end section = 13,100 lbs.

Area of waterway = 32 sq. ft.

NOTE:

1. Cost of furnishing and installing eyebolts shall be included in the unit price bid for fencing. Eyebolts shall be galvanized according to AASHTO Designation M-30.
2. All sections shall be tied with ties on inside and nuts on outside.
3. CONSTRUCTION NOTES: If splices are not electrically welded, the reinforcement shall be lapped 40 diameters. If splices are electrically welded, the members at either a welded splice or intersection shall develop a tensile strength across the weld, not less than the minimum required strength of the fabric.

X-C = Extra Strength

Equivalent Class	Concrete Strength	Steel Area Sq. In. per Lin. Ft.		Embankment Installation Maximum Fill	
		Ai	Ao	Normal* Backfill	Imperfect Trench
Std	3500	0.41	0.32	16′	31′
X-C	4500	0.65	0.47	24′	44′

* 0.0 Projection Ratio

NORTH DAKOTA DEPARTMENT OF TRANSPORTATION	
10-1-86	
REVISIONS	
DATE	CHANGE
10-10-89	Eyebolt holes
06-11-97	Added note 2
12-01-04	PE Stamp added

This document was originally issued and sealed by MARK S GAYDOS, Registration Number PE-4518, on 12/01/04 and the original document is stored at the North Dakota Department of Transportation