# 39″ x 36″ SPREAD SUSPENDED PRESTRESSED BOX GIRDER (COMPOSITE SLAB)

D-604-4

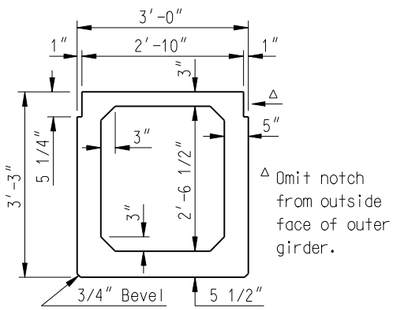


(SHOWING TYPICAL DIMENSIONS)

A–A

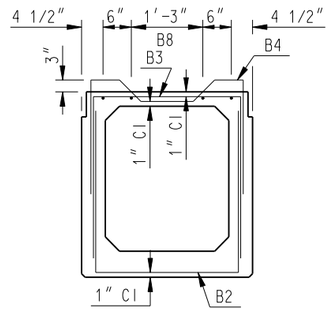


(SHOWING REINFORCING)

A–A

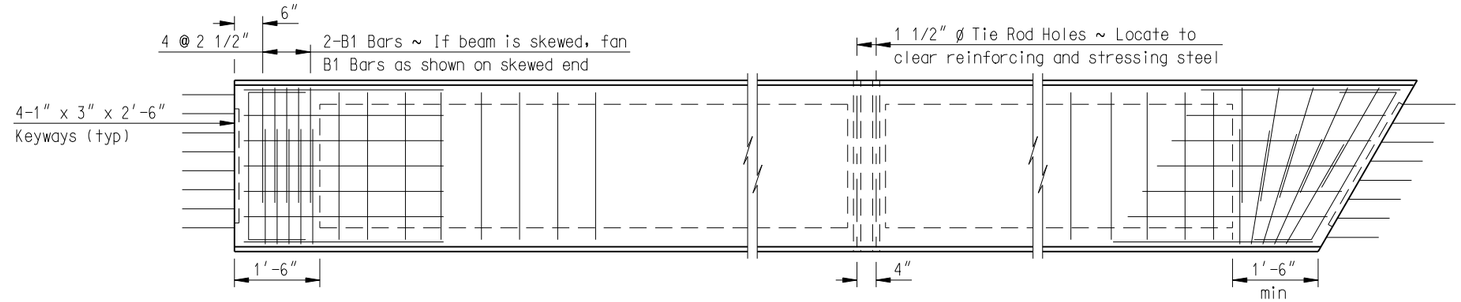


(PART SHOWING SQUARED END)

PLAN

(PART SHOWING SKEWED END)

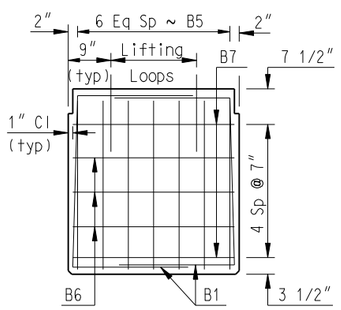


B–B

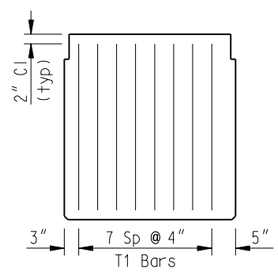


END VIEW

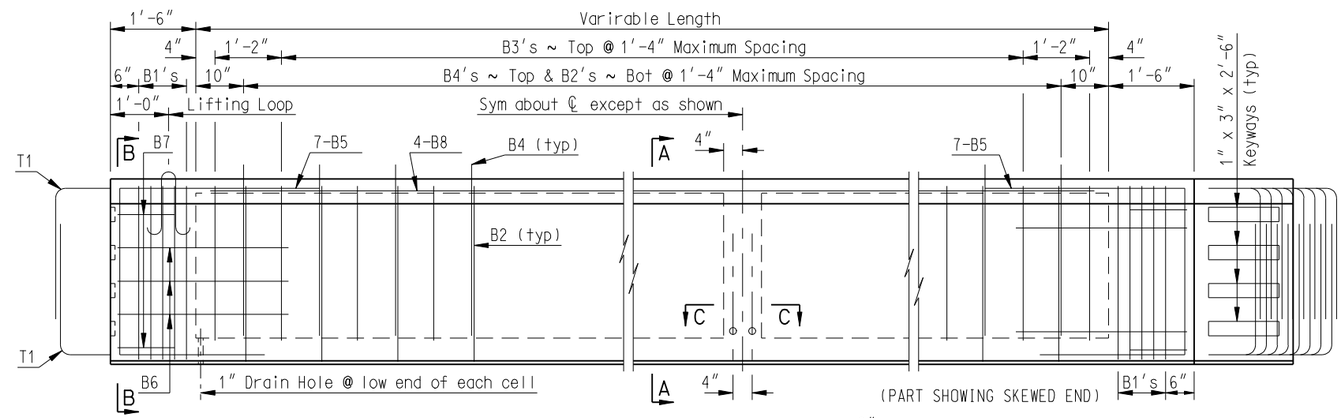


(PART SHOWING SQUARED END)

ELEVATION

(PART SHOWING SKEWED END)

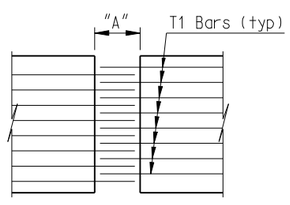


GIRDER END PLAN AT PIER

* Welded Wire Fabric with minimum circumferential steel area of 0.15 sq in per ft may be substituted for B2′s and B3′s.

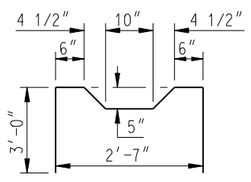


B4

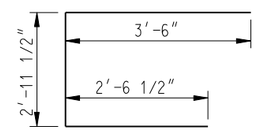


B5

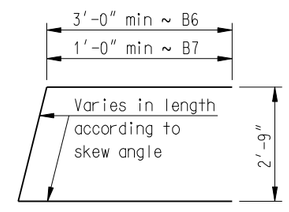


B6 & B7

(OUTER GIRDERS ONLY)

DIAPHRAGM BAR INSERT

C–C

| BAR LIST | | | | |
|---|---|---|---|---|
| MARK | SIZE | LENGTH | SHAPE | |
| B1 | 4 | 7′-1″ | BENT | |
| B2 | 4 | 8′-3″ | BENT | * |
| B3 | 4 | 7′-10″ | BENT | * |
| B4 | 4 | 9′-0″ | BENT | |
| B5 | 5 | 9′-0″ | BENT | |
| B6 | 4 | VARIABLE | STR. | |
| B7 | 4 | VARIABLE | STR. | |
| B8 | 4 | VARIABLE | STR. | |
| | | | | |
| T1 | 4 | VARIABLE | STR. | ** |

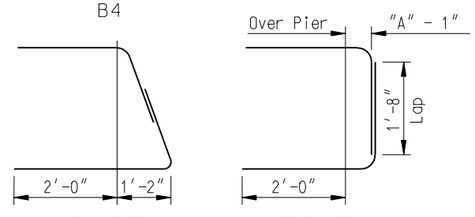


(AT ABUTMENTS)

(AT PIERS)

** FIELD BEND AS SHOWN (GRADE 40)

T1

BENT BAR DETAILS

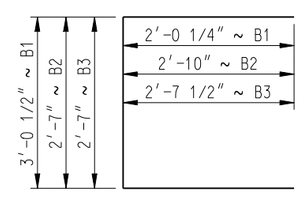


B1, B2 & B3

## NOTES:

At least 14 days prior to the forming and casting of any girders, the CFntractor shall submit shop drawings to the Construction Office of the North Dakota Department of Transportation for approval. The final prestress force shall be calculated using calculated losses as specified in the AASHTO Standard Specifications for Highway Bridges. Strand pattern arrangements shall assure compressive and tensile stresses are within the limits as specified in the AASHTO Standard Specifications for Highway Bridges. Minor changes to the shape of the girder and to the reinforcing steel may be made to accomodate the forms of various contractors and construction methods and shall be shown on the shop drawings.

The girders shall be cast in all-steel forms. The reinforcing steel shall be grade 60.

C.G. = 17.65″ from bottom: Area = 618.5 sq in:
Moment of Inertia = 113,799 in$^4$

| NORTH DAKOTA DEPARTMENT OF TRANSPORTATION | |
|---|---|
| MAR 95 | |
| REVISIONS | |
| DATE | CHANGE |
| 18 NOV 03 | Standard format & Increase B5 bar size to 5 |
| 01 DEC 04 | PE stamp added |

This document was originally issued and sealed by TERRENCE R UDLAND, Registration Number PE-2674, on 12/01/04 and the original document is stored at the North Dakota Department of Transportation



Weight of girder in tons = (0.3222)(Length of girder in ft) + (0.2691)(# of Diaphragms) + (1.2106)(1 + Tangent of skew angle)