DESIGN GUIDELINES

for

PREVENTIVE MAINTENANCE
MINOR REHABILITATION
STRUCTURAL IMPROVEMENT
MAJOR REHABILITATION
and
NEW/RECONSTRUCTION PROJECTS

Prepared by

NORTH DAKOTA DEPARTMENT OF TRANSPORTATION
608 EAST BOULEVARD AVENUE
BISMARCK, NORTH DAKOTA 58505-0700

DIRECTOR
Francis G. Ziegler, P.E.

MARCH 2007

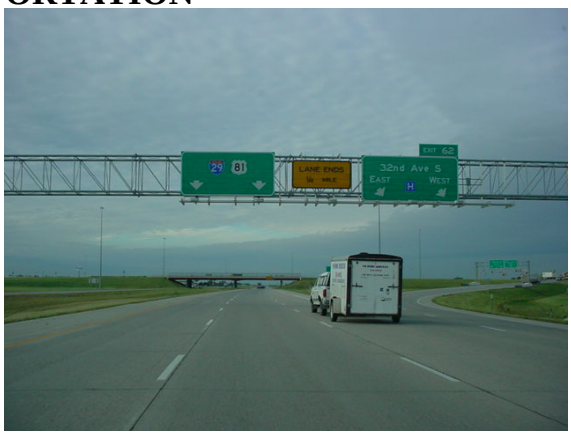

NDDOT
North Dakota
Department of Transportation

NORTH DAKOTA DEPARTMENT OF TRANSPORTATION

DESIGN GUIDELINES

FOR

PREVENTIVE MAINTENANCE, MINOR REHABILITATION, STRUCTURAL IMPROVEMENT, MAJOR REHABILITATION AND NEW/RECONSTRUCTION PROJECTS

CERTIFICATION

I hereby certify that these guidelines were prepared by me or under my direct supervision and that I am a duly registered professional engineer under the laws of the State of North Dakota

This document
was originally issued and
sealed by Grant Levi,
Registration Number P.E. 3110
on 3/12/07 and the original
document is stored at the
North Dakota Department
of Transportation.

\s_____ 3/12/07_____

Grant Levi, P.E. Deputy Director for Engineering
North Dakota Department of Transportation

Date

NORTH DAKOTA DEPARTMENT OF TRANSPORTATION

DESIGN GUIDELINES

FOR

PREVENTIVE MAINTENANCE, MINOR REHABILITATION, STRUCTURAL IMPROVEMENT, MAJOR REHABILITATION AND NEW/RECONSTRUCTION PROJECTS

Approved by:

\s_____	3/12/07_____
Grant Levi, P.E. Deputy Director for Engineering North Dakota Department of Transportation	Date
\s_____	3/12/07_____
Francis G. Ziegler, P.E. Director North Dakota Department of Transportation	Date
\s_____	3/19/07_____
Ronny J. Hartl, Assistant Division Administrator Federal Highway Administration	Date
\s_____	3/19/07_____
Allen R. Radliff, Division Administrator Federal Highway Administration	Date

This is a living document. Minor changes will be made if agreement can be made between the North Dakota Department of Transportation, Deputy Director for Engineering and Federal Highway Administration, Assistant Division Director.

Table of Contents

NDDOT DESIGN GUIDELINES **1**

GENERAL 1

GEOMETRIC DESIGN GUIDELINES **2**

DESIGN GUIDELINES FOR PREVENTIVE MAINTENANCE PROJECTS 2
DESIGN GUIDELINES FOR MINOR REHABILITATION PROJECTS 3
DESIGN GUIDELINES FOR STRUCTURAL IMPROVEMENT PROJECTS 4
DESIGN GUIDELINES FOR MAJOR REHABILITATION PROJECTS 5

EXAMPLES OF MAJOR REHABILITATION TREATMENTS ARE: MINE AND BLEND AND HBP, FULL DEPTH RECLAMATION, MAJOR CONCRETE PAVEMENT REPAIR (GREATER THAN 10% OF THE SURFACE AREA PER MILE), ETC. **5**

DESIGN GUIDELINES FOR NEW/RECONSTRUCTION PROJECTS 6
MINIMUM ROADWAY WIDTH ON FOUR LANE HIGHWAYS 7
MINIMUM ROADWAY WIDTH ON TWO LANE TWO WAY HIGHWAYS 8

STATEWIDE SAFETY PROGRAM **9**

ANALYSIS STRATEGIES 9
1. Critical Rate Analysis *9*
2. High Crash Analysis *10*
3. Project level Analysis *11*
COUNTER MEASURES 11
IMPLEMENTATION MEASURES 11

APPENDIX

Appendix A – Counter Measures
Appendix B – Department Shoulder Standards

NDDOT DESIGN GUIDELINES

General

1. The intent of the roadway width guidelines is **not** to reduce the roadway width to the minimum width shown in the guidelines, but rather to maintain the width as close as possible to the existing width.

2. If a District Corridor is on the NHS system the roadway will be designed to meet the minimum design guidelines for a State Corridor.

3. Design features that do not meet the minimum design guidelines, but are incorporated into a project will require a design exception.

4. Safe pavement sloughs will be maintained as described in the Departments shoulder standards in appendix B. If there is no shoulder the slough should have a minimum slough of 3:1.

5. The traffic volumes shown are general guidelines. A 10 % tolerance in the volumes may be allowed without requiring the designer to move to the next level of standard or the need for a design exception.

GEOMETRIC DESIGN GUIDELINES

Design Guidelines for Preventive Maintenance Projects

Traffic Data	Use current ADT
Roadway Width	Use appropriate width to meet NDDOT guidelines.
Superelevations	Use existing.
Design Speed	Use posted speed limit.
Driving Lane Cross Slope	Use Existing.
Horizontal Curvature	Use existing.
Vertical Curvature	Use existing.
Clear Zone	Use existing.
Inslope	Use existing
Roadway Shoulder/Slough Cross Slope	Use Department Shoulder Standards. (See appendix B)
Safety	Safety issues will be identified and addressed as part of the Statewide Safety Program. Safety features will remain as they exist unless a need is identified.

The purpose of the Preventive Maintenance program is to protect the pavement structure, slow the rate of pavement deterioration and/or correct pavement surface deficiencies. Surface treatments used for preventive maintenance are targeted at pavement surface defects primarily caused by the environment and by the daily wear and tear of traffic. Structural deficiencies caused by traffic loading are not corrected by using these treatments.

Preventive Maintenance treatments may be applied as frequently as supported by a cost effectiveness determination. Improvements for ADA requirements will be considered and be addressed in the environmental document. Most preventive maintenance projects will be conducted on the top of the existing roadway and will have no impact to wetlands or cultural resources. Miscellaneous features such as mailboxes, signing, delineators and others will not be required to be upgraded as part of these projects unless identified by the Statewide Safety Program. Signage not in compliance with the MUTCD will be updated if engineering judgment indicates that:

- One compliant device in the midst of a series of adjacent non-compliant devices could potentially be confusing to road user.
- The anticipated schedule for replacement of the whole series of non-compliant devices will result in achieving timely compliance with the MUTCD.

All railroad crossings will have adequate warning/protective devices in place or be otherwise addressed in the State Railroad Crossing Improvement Program.

Examples of Preventive Maintenance treatments are: Crack Pouring/Sealing, Route and Seal, Seal Coats, Micro-Surfacing, Asphalt Overlay 2” Maximum (no allowance for rut filling), Repair of depressed cracks, Minor Concrete Pavement Repair (less than 10% of the pavement surface area per mile), Dowel Bar Retrofit, Diamond Grinding, Pavement Marking, Painting Structures, etc.

Design Guidelines for Minor Rehabilitation Projects

Traffic Data	Use current ADT
Roadway Width	Use appropriate width to meet NDDOT guidelines.
Superelevations	Use existing.
Design Speed	Use posted speed limit
Driving Lane Cross Slope	Use Existing.
Horizontal Curvature	Use existing.
Vertical Curvature	Use existing.
Clear Zone	Use existing.
Inslope	If the proposed inslope is less than 3:1 consider cost effective treatment. In fill sections where the inslope breaks to less than 3:1 outside the clear zone a 4:1 inslope should be used in the clear zone.
Roadway Shoulder/Slough Cross Slope	Use Department Shoulder Guidelines. (See appendix B)
Safety	Safety issues will be identified and addressed as part of the Statewide Safety Program. Safety features will remain as they exist unless a need is identified. Safety hardware that does not meet NCHRP 230 standards or better will be upgraded to meet NCHRP 350 standards.

Minor Rehabilitation is a planned strategy to extend the useful life of a highway by restoring the pavement structure without necessarily improving existing geometrics. The minor rehabilitation of roadways will use repair techniques designed to repair pavement distress areas primarily caused by the environment and by the daily wear and tear of traffic. A minor rehabilitation strategy will restore the load carrying capacity to its original condition. During the scoping process the department will determine if the inslope criteria is being met. The appropriate NEPA process will be followed to address any environmental impacts. Improvements for ADA requirements will be considered and be addressed in the environmental document. Miscellaneous features such as mailboxes, signing, delineators and others will not be required to be upgraded as part of these projects unless identified by the Statewide Safety Program. Signage not in compliance with the MUTCD will be updated if engineering judgment indicates that:

- One compliant device in the midst of a series of adjacent non-compliant devices could potentially be confusing to road user.
- The anticipated schedule for replacement of the whole series of non-compliant devices will result in achieving timely compliance with the MUTCD.

All railroad crossings will have adequate warning/protective devices in place or be otherwise addressed in the State Railroad Crossing Improvement Program.

Examples of Minor Rehabilitation treatments are: Asphalt Overlay 2”-3”, Distress Area Repairs and Asphalt Overlay, Mill & Overlay, Cold In-Place Recycling (CIR), minor sliver grading to correct inslope, Bridge Approach Repair, Bridge Rail Repair, Deck Overlay, Guardrail, etc.

Design Guidelines for Structural Improvements Projects

Traffic Data	Use 20 year projected
Roadway Width	Use appropriate width to meet NDDOT guidelines.
Superelevations	Attempt to correct to NDDOT guidelines. Request design exception if not cost effective.
Design Speed	Use posted speed limit
Driving Lane Cross Slope	HBP Over Asphalt Roadways: 2.1% HBP Over Non Interstate Concrete Roadways: 1.5-2.5 % HBP Over Interstate Concrete Roadways: 1.5-2.5 %
Horizontal Curvature	Use existing, sign when less than posted speed.
Vertical Curvature	Use existing.
Clear Zone	20 foot clear zone.
Inslope	If the proposed inslope is less than 3:1 consider cost effective treatment. In fill sections where the inslope breaks to less than 3:1 outside the clear zone a 4:1 inslope should be used in the clear zone.
Roadway Slough	Use Department Guidelines for sloughs.
Roadway Shoulder Cross Slope	HBP Over Asphalt Roadways: 8.0 % Max. HBP Over Non Interstate Concrete Roadways: 8.0 % Max HBP Over Interstate Concrete Roadways: 6.0% Max
Safety	Safety issues will by identified and addressed as part of the Statewide Safety Program. Safety features will remain as they exist unless a need is identified. Safety hardware that does not meet NCHRP 230 standards or better will be upgraded to meet NCHRP 350 standards. Replace mailbox supports where necessary.

Structural improvement is a planned strategy to extend the useful life of a highway by restoring the pavement structure without necessarily improving existing geometrics. A structural improvement is a white topping project or an HBP overlay in excess of 3” and is designed based on an engineering analysis. A structural improvement will increase the load carrying capacity to meet the HPCS guidelines. The appropriate NEPA process will be followed to address any environmental impacts. Improvements for ADA requirements will be considered and be addressed in the environmental document. All regulatory and warning signs and pavement markings will be verified to comply with current MUTCD standards or brought up to MUTCD standards if necessary, and all railroad crossings will have adequate warning/protective devices in place or be otherwise addressed in the State Railroad Crossing Improvement Program.

Design Guidelines for Major Rehabilitation Projects

Traffic Data	Use 20 year projected
Roadway Width	Use appropriate width to meet NDDOT guidelines.
Superelevations	Correct to NDDOT guidelines.
Design Speed	Use posted speed limit.
Cross Slope	Driving lanes 1.5 – 2.5%, Shoulder 6% max.
Horizontal Curvature	Use existing, sign when less than posted speed. On State and Interregional Corridors with ADT >750, if existing horizontal curvature is designed for less than 15 mph less than the posted speed make cost effective improvement or sign accordingly.
Vertical Curvature	**Interregional System:** ADT < 2000 maintain existing. ADT > 2000 use stopping sight distance for crest curve design and comfort curve design for sag curves. Decision sight distance should be considered in areas where complex driver decisions are required such as intersections with major collectors or higher, interchanges, lane drops or additions, etc. Passing areas should be provided at reasonable intervals based on terrain and traffic volumes. A rule of thumb would be a passing area every 3 to 5 miles when the ADT <2000 and every 3 miles when the ADT >2000. **State Corridors, District Corridors & Collectors:** ADT < 2000, existing vertical curves should meet a design speed of no less than 20 mph below the overall project design speed. ADT > 2000 use stopping sight distance for crest curve design and comfort curve design for sag curves. Passing areas should be provided at reasonable intervals based on terrain and traffic volumes. A rule of thumb would be a passing area every 3 to 5 miles when the ADT <2000 and every 3 miles when the ADT >2000.
Clear Zone	Upgrade safety work to 20' clear zone except when ADT >2000 use AASHTO roadside design clear zone.
Inslope	4:1 minimum, on Interregional system > 2000 ADT a 6:1 inslope is desirable where grading or roadway widening is required.
Pavement Slough	Use NDDOT shoulder treatment methods.
Safety	A 90-1 survey will be completed and areas needing safety improvements will be addressed. Upgrade safety hardware to meet NCHRP 350 standards.

Major Rehabilitation is a planned strategy in which major work is performed to bring a highway up to an acceptable condition to extend the service life and provide operational improvements (i.e. adding turn lanes). Improvements for ADA requirements will be addressed in the environmental document.

Major rehabilitation projects may include reclaiming the existing surface material and base along with the placement of additional surface material and/or other work necessary to return an existing roadway, including shoulders, bridges, the roadside, and appurtenances to a condition of structural or functional adequacy. On these projects the roadway elevation may change, shoulders may be added, and foreslope corrections may be made. The roadway will be resurfaced and safety improvements will be completed as required. A crash analysis will be completed and cost effective enhancements will be addressed. All regulatory and warning signs and pavement markings will be verified to comply with current MUTCD standards or brought up to MUTCD standards if necessary, and all railroad crossings will have adequate warning/protective devices in place or be otherwise addressed in the State Railroad Crossing Improvement Program.

Examples of Major Rehabilitation treatments are: Mine and Blend and HBP, Full depth Reclamation, Major Concrete Pavement Repair (greater than 10% of the surface area per mile), etc.

Design Guidelines for New/Reconstruction Projects

Traffic Data	Use 20 year projected
Roadway Width	Use AASHTO Standards.
Superelevations	Use AASHTO Standards.
Design Speed	Use posted speed limit.
Cross Slope	Driving lanes 1.5 – 2.5%, Shoulder 6% max.
Horizontal Curvature	Use AASHTO Standards.
Vertical Curvature	**Interregional System:** Use stopping sight distance for crest curve design and comfort curve design for sag curves. Decision sight distance should be considered in areas where complex driver decisions are required such as intersections with major collectors or higher, interchanges, lane drops or additions, etc. Passing areas should be provided at reasonable intervals based on terrain and traffic volumes. A rule of thumb would be a passing area every 3 to 5 miles when the ADT <2000 and every 3 miles when the ADT >2000. **State Corridors, District Corridors & Collectors:** Use stopping sight distance for crest curve design and comfort curve design for sag curves. Passing areas should be provided at reasonable intervals based on terrain and traffic volumes. A rule of thumb would be a passing area every 3 to 5 miles when the ADT <2000 and every 3 miles when the ADT >2000.
Clear Zone	Use AASHTO roadside design clear zone.
Inslope	Use 4:1 except Interregional system > 2000 ADT and Interstate use 6:1
Pavement Slough	Use AASHTO Standards.
Safety	Safety hardware to meet NCHRP 350 standards.

Is defined as a planned strategy in which a new road is constructed. This work may include work items such as relocating an existing route on new alignment, or completely removing the old pavement structure and restoring the roadbed and surfacing, or major widening on an existing roadway to increase traffic capacity (excludes realigning horizontal curves).

On New/Reconstruction projects a crash analysis will be completed and cost effective enhancements will be addressed. All safety hardware will meet NCHRP 350 standards. ADA requirements will be addressed. All regulatory and warning signs and pavement markings will be verified to comply with current MUTCD standards or brought up to MUTCD standards if necessary, and all railroad crossings will have adequate warning/protective devices in place or be otherwise addressed in the State Railroad Crossing Improvement Program.

Minimum Roadway Width on Four Lane Highways

Interstate 4 - Lane	<400	400-750	750-1500	1500-2000	>2000
New / Reconstruction	AASHTO STDS	AASHTO STDS	AASHTO STDS	AASHTO STDS	AASHTO STDS
Major Rehabilitation	AASHTO STDS	AASHTO STDS	AASHTO STDS	AASHTO STDS	AASHTO STDS
Structural Improvement	Maintain Existing	Maintain Existing	Maintain Existing	Maintain Existing	Maintain Existing
Minor Rehabilitation	Maintain Existing	Maintain Existing	Maintain Existing	Maintain Existing	Maintain Existing
PM	Maintain Existing	Maintain Existing	Maintain Existing	Maintain Existing	Maintain Existing

Interregional 4 - Lane	<400	400-750	750-1500	1500-2000	>2000
New / Reconstruction	AASHTO STDS	AASHTO STDS	AASHTO STDS	AASHTO STDS	AASHTO STDS
Major Rehabilitation	36	36	36	36	36
Structural Improvement	32	32	32	32	32
Minor Rehabilitation	32	32	32	32	32
PM	31	31	31	31	31

Minimum Roadway Width on Two Lane Two Way Highways

Interregional 2 - Lane	<400	400-750	750-1500	1500-2000	>2000
New / Reconstruction	32	36	36	36	40
Major Rehabilitation	30	30	36	36	36
Structural Improvement	26	26	28	30	32
Minor Rehabilitation	26	26	28	30	32
PM	26	26	28	28	30

State Corridor	<400	400-750	750-1500	1500-2000	>2000
New / Reconstruction	32	36	36	36	40
Major Rehabilitation	*28	*28	*32	36	36
Structural Improvement	24	24	28	28	32
Minor Rehabilitation	24	24	26	28	32
PM	24	24	26	26	28

District Corridor	<400	400-750	750-1500	1500-2000	>2000
New / Reconstruction	32	36	36	36	40
Major Rehabilitation	*26	*28	*30	32	36
Structural Improvement	22	24	26	26	28
Minor Rehabilitation	22	24	26	26	28
PM	22	24	24	26	26

District Collector	<400	400-750	750-1500	1500-2000	>2000
New / Reconstruction	32	36	36	36	40
Major Rehabilitation	*26	*26	*28	30	30
Structural Improvement	22	22	24	26	26
Minor Rehabilitation	22	22	24	26	26
PM	22	22	24	26	26

- The intent of these guidelines is not to reduce the roadway width to the minimum guidelines, but rather to maintain the width as close as possible to the existing width. Roadway widths shown are the minimum recommended widths, actual allowable widths should be determined on a case by case basis using the Resurfacing Safety Resource Allocation Program (RSRAP) provided in NCHRP Report 486. If the width of the existing roadway is less than the stated guidelines, the width of the existing roadway may remain if it is determined to be safe by RSRAP and a design exception is approved.
- District Corridor routes on the National Highway System (NHS) will be designed to State Corridor Guidelines
- Numbers in the shaded areas are ADT. Roadway widths are in feet.

* Minimum roadway widths for “Major Rehabilitation” strategies will be the same as “Minor Rehabilitation” strategies, unless widening is required. If widening is required to meet “Minor Rehabilitation” strategies minimum widths, widening will be sufficient to meet “Major Rehabilitation” strategies minimum widths.

STATEWIDE SAFETY PROGRAM

ANALYSIS STRATEGIES

The Statewide Safety program will consist of four different types of analysis. Safety projects will be based on corridor improvements. A corridor is defined as the intersection of State Highway to State Highway as shown in the figure below.

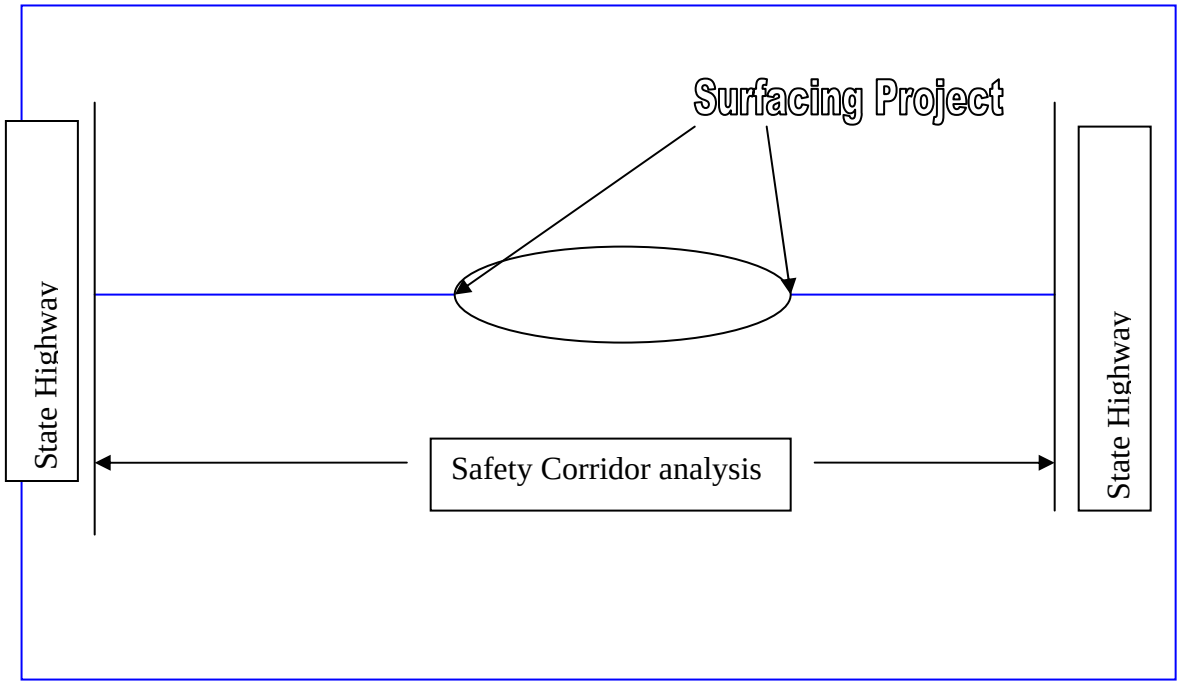

1. Critical Rate Analysis

The NDDOT will review the entire state highway system on a yearly basis in an effort to identify the sections of roadway corridor that exhibit the highest crash rates. Those corridors of highways that exhibit a crash rate higher than the critical rate for their particular Highway Performance Classification System (HPCS) will be reviewed in greater detail to determine if there are cost effective measures that can be made or if engineering judgment determines that improvements should be made.

The Concept of "Critical Crash Rate" suggests that any sample or category of intersections or roadway corridors can be divided into three basic parts:

- Locations with a crash rate below the average will be eliminated from further review.
- Locations with a crash rate above the average, but below the critical rate are locations where there is a very high probability (90-95%) that the higher than average crash rate is due to the random nature of crashes.
- Locations with a crash rate above the critical rate will be reviewed because there is a high probability (90-95%) that conditions at the site are contributing to the higher crash rate.

Critical crash rate is calculated: $R_c = R_a + K(R_a/m)^{1/2} - 0.5/m$
(Critical crash rate is based on MnDOT Methodologies)

R_c = Critical Crash Rate for:
Intersections: crashes per MEV
Corridors: crashes per MVM

R_a = HPCS Average Crash Rate by intersection or HPCS type.

M = Vehicle Exposure During Study Period for:
Intersections: ADT ($365/10^6$)
Corridors: ADT ($365/10^6$) length

K = Constant based on Level of Confidence

Level of Confidence	0.995	0.950	0.900
K	2.576	1.645	1.282

Sample Graph

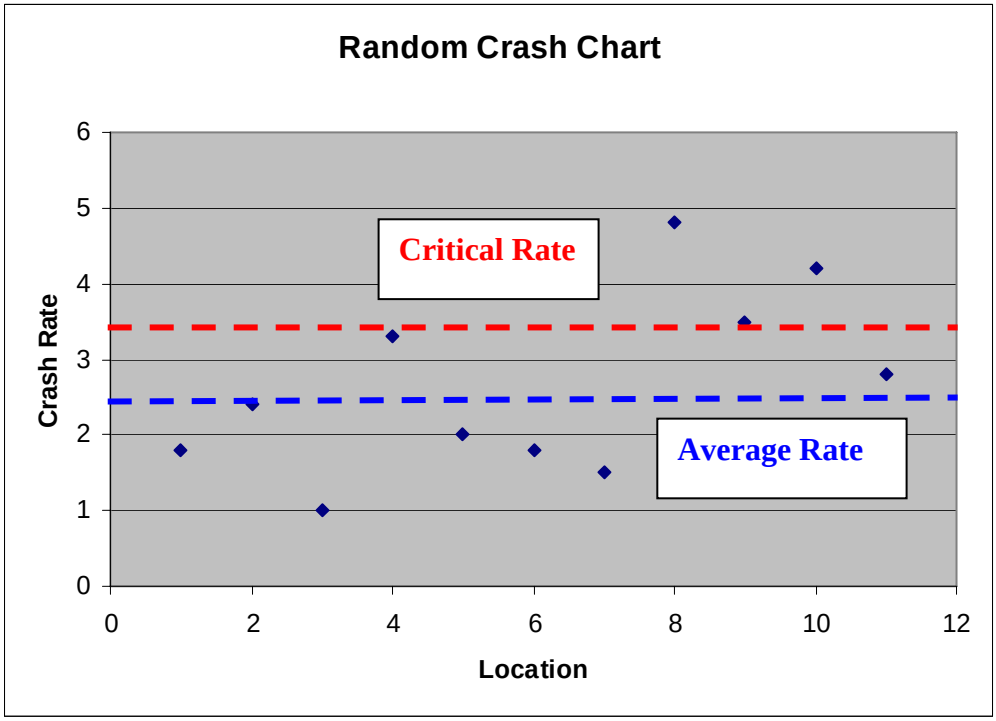

2. High Crash Analysis

The High Crash Analysis will be done on a yearly basis for the entire state highway system. Those intersections or sections of roadway that are identified in this report will be reviewed in greater detail to determine if there are cost effective measures that can be made or if engineering judgment determines that improvements should be made

3. Project level Analysis

On Structural Improvement, major rehabilitation and new construction projects, each project will be reviewed to determine if there are cost effective measures that can be made or if engineering judgment determines that improvements should be made.

4. Strategic Highway Safety Plan (SHSP)

On Structural Improvement, major rehabilitation and new construction projects, each project will be reviewed to determine if there are cost effective measures that can be made that are related to the emphasis areas identified in the SHSP.

COUNTER MEASURES

Appendix A provides examples of how identified “Areas of Concerns” and “Alternative Safety Measures” can be developed. The Alternative Safety Measures would be those measures that would be evaluated for cost effective improvements.

IMPLEMENTATION MEASURES

Cost effective measures will be implemented one of two ways.

1. If the improvement is an improvement that should be made throughout the corridor, a safety project will be scheduled and included in the STIP. The goal would be to make the necessary improvements within three years of the highway improvement project or when safety funds are available.

2. If the improvement is specific to a feature that is contained within the limits of the project. The cost effective measure will be included with that project.

   Example: If the superelevation on a curve is identified as a hazard, a cost effective measure as identified in Appendix A will be used to correct the hazard during construction of the project.

Appendix A

Counter Measures

Appendix A

COUNTER MEASURES

Accident Type	Possible Cause	Possible Study	Possible Safety Enhancement
Run-Off-Road	Slippery pavement/ ponded water	Check skid resistance Check for adequate drainage Perform spot speed study	Reduce speed limit if justified by spot speed study Provide “SLIPPERY WHEN WET” signs Provide adequate drainage Groove existing pavement Overlay existing pavement
	Roadway design inadequate for traffic conditions	Check roadside shoulders and road maintenance Check superelevations Perform ball-bank study	Install/improve traffic barriers Close curb lane Flatten slopes/ditches Relocate islands Improve alignment/grade Provide proper superelevations Provide escape ramp Widen lanes/shoulders
	Poor delineation	Review pavement markings Review signs and placement	Install roadside delineators Install advance warning signs Improve/install pavement markings
	Poor visibility	Check roadway illumination	Increase sign size Improve roadway lighting
	Improper channelization	Review channelization	Improve channelization
Collision at driveways	Left-turning vehicles	Perform turning counts	Install median divider Install two-way left-turn lanes
	Improperly located driveway	Review driveway placement	Regulate minimum spacing of driveways Regulate minimum corner clearance Move driveway to side street Install curbing to define driveway location Consolidate adjacent driveways
	Right-turning vehicles	Perform turning counts Review Parking Check driveway and lane width Check curb radii	Restrict parking near driveways Increase the width of the driveway Increase curb radii Provide right-turn lanes Widen through lanes
	Large volume of through traffic	Perform volume count for thru traffic	Move driveway to side street Construct a local service road

Accident Type	Possible Cause	Possible Study	Possible Safety Enhancement
			Reroute through traffic
	Large volume of driveway traffic	Perform volume count for driveway traffic Perform gap study	Signalize driveway Provide acceleration and deceleration lanes Channelize driveway
	Restricted sight distance	Field observation for sight obstructions Review parking Check roadway illumination Perform spot speed study	Restrict parking near driveways Reduce speed limit if justified by spot speed study Install/improve street lighting Remove sight obstruction
Sideswipe or head-on	Inadequate road design and/or maintenance	Review lane width Check alignment Perform no passing study Check road surface for proper maintenance	Perform necessary road surface repairs Sign and mark unsafe passing areas Provide roadside delineators Improve alignment/grade Provide wider lanes Provide passing lanes
	Inadequate shoulders	Review road shoulders	Improve shoulders
	Excessive vehicle speed	Perform spot speed study	Reduce speed limit if justified by spot speed study Install median devices
	Inadequate pavement markings	Review pavement markings	Install/improve centerlines, lane lines, and edgelines Install reflectorized markers Install centerline rumble strips
	Inadequate channelization	Review channelization	Install/improve channelization Install acceleration and deceleration lanes Provide turning bays
	Inadequate signing	Review signing and placement	Provide advance direction and warning signs Add illuminated name signs
Pedestrian/ bicycle	Limited sight distance	Check sight distance	Remove sight obstruction Install/improve pedestrian crossing signs and markings Reroute pedestrian paths
	Inadequate protection	Check existing protection	Add pedestrian refuge islands
	Inadequate signal/signs	Review signal/signs	Install/upgrade signals/signs
	Inadequate signal phasing	Review signal phasing	Change timing of pedestrian phase

Accident Type	Possible Cause	Possible Study	Possible Safety Enhancement
			Add pedestrian “Walk” phase
	Inadequate pavement markings	Review pavement markings	Supplement markings with signing Upgrade pavement markings
	Inadequate lighting	Check roadway illumination	Improve lighting
	Driver has inadequate warning of frequent mid-block crossing	Review existing parking Perform spot speed study	Prohibit parking Install warning signs Reduce speed limit if justified by spot speed study Install pedestrian barriers
	Lack of crossing opportunity	Perform gap study	Install traffic/pedestrian signals Install pedestrian crosswalk and signs
	Excessive vehicle speed	Perform spot speed study	Reduce speed limits Install proper warning signs
	Pedestrians/bicycles on roadways	Review existence of sidewalks	Eliminate roadside obstructions Install curb ramps with detectable warning panels Install sidewalks Install bike lanes/paths
	Long distance to nearest crosswalk	Check distance and travel time to nearest crosswalk	Install pedestrian crosswalk Install pedestrian actuated signals
	Sidewalk too close to traveled way	Review existing sidewalks	Move sidewalk laterally away from roadway
	School crossing area	Check pedestrian crossing time and available gaps Check school’s safe route to and from school program Check school’s student awareness program	Establish save route and awareness program Use school crossing guards Install crosswalks and traffic signal
Bridges	Alignment	Check alignment	Install advance warning sings Improve delineation/markings Realign bridge/roadway
	Narrow roadway	Review lane width Review signing	Improve delineation/markings Install signing/signals Widen structure

Accident Type	Possible Cause	Possible Study	Possible Safety Enhancement
	Visibility	Field observation for site obstruction	Improve delineation/markings Install advance warning sings Remove obstruction
	Vertical clearance	Check clearance	Improve delineation/markings Install advance warning sings Provide height restrictor/warning device Rebuild structure/adjust roadway grade
	Slippery surface (wet/icy)	Check skid resistance Check for adequate drainage	Provide special signing Provide adequate drainage Improve skid resistance Resurface deck
	Rough surface		Rehabilitate joints Resurface deck Regrade approaches
	Inadequate barrier system	Field observation and checks against established barrier standards	Improve delineation/markings Remove hazardous curb Upgrade bridge rail Upgrade bridge approach rail connections Upgrade approach rail/terminals
Collisions at railroad crossings	Restricted sight distance	Review sight distance	Install advance warning signs Remove sight obstructions Install train actuated signals Install gates Reduce grades
	Poor visibility	Check roadway illumination Review signing	Increase size of signs Improve roadway lighting
	Inadequate pavement marking	Review pavement markings	Install advance markings to supplement signs Install stop bars Install/improve pavement markings
	Rough crossing surface	Check crossing surface	Improve crossing surface
	Sharp crossing angle	Check crossing angle	Rebuild crossing with proper angle
	Improper pre-emption timing of traffic signals, railroad signals, or gates	Review traffic signal timing Review railroad signal and gate timing	Retime traffic signals Retime railroad signals and gates

Accident Type	Possible Cause	Possible Study	Possible Safety Enhancement
Nighttime	Poor visibility or lighting	Check roadway illumination	Install/improve warning sings Install/improve delineation/markings Install/improve street lighting
	Poor sign quality	Review signing	Upgrade signing Provide illuminated reflectorized signs
	Inadequate channelization of delineation	Review channelization/delination	Install pavement markings Improve channelization/delination
Wet pavement	Slippery pavement	Check skid resistance Check for adequate drainage Perform spot speed study	Provide “SLIPPERY WHEN WET” signs Reduce speed limit if justified by spot speed study Provide adequate drainage Groove existing pavement Overlay existing pavement
	Inadequate pavement marking	Review pavement markings	Install raised/reflectorized pavement markings
Rear-end collisions at unsignalized intersections	Pedestrian crossing	Review pedestrian signing and crosswalk marking	Install/improve signing or marking for pedestrian crosswalks Relocate crosswalk
	Driver not aware of intersection	Review signing	Install/improve warning signs
	Slippery surface	Check skid resistance Check for adequate drainage Perform spot speed study	Provide “SLIPPERY WHEN WET” signs Reduce speed limit if justified by spot speed study Groove existing pavement Overlay existing pavement
	Large number of turning vehicles	Perform turning counts Perform volume count for thru traffic	Prohibit turns Increase curb radii Create left-of-right-turn lanes
Collisions with parked cars or cars being parked	Inadequate road design	Check lane width Review parking angle	Change from angle to parallel parking Prohibit parking Widen lanes/shoulders
	Large parking turnover	Perform paring turnover study	Prohibit parking Change from angle to parallel parking Create one-way streets

Accident Type	Possible Cause	Possible Study	Possible Safety Enhancement
			Create off-street parking
	Improper pavement markings	Review pavement markings	Correct pavement markings
	Illegal parking	Law observance study	Enforcement
Overturn	Roadside features	Determine sideslope Investigate recovery zone	Provide traversable culvert end treatments Extend culverts Install/improve traffic barriers Flatten slopes and ditches Relocate drainage facilities
	Inadequate shoulder	Determine shoulder dimensions and composition Check for shoulder drop offs	Upgrade shoulder surface Remove curbing obstruction Widen lane/shoulder
	Pavement feature	Check for potholes Check for water ponding	Eliminate edge drop off Improve superelevation/crown
Fixed object	Obstruction in or too close to roadway	Field observation to locate obstruction	Delineation/reflectorize safety hardware Remove/relocate obstacles Install breakaway features to light poles, signposts, etc. Protect objects with guardrail Install crash cushions
	Inadequate lighting	Check illumination	Improve roadway lighting
	Inadequate pavement marking	Review pavement markings	Install reflectorized pavement lines/raised markers
	Inadequate signs, delineators and guardrail	Review signs, delineators and guardrails	Install reflectorized paint, and/or reflectors on the fixed object Add special signing Upgrade barrier system
	Inadequate road design	Check roadside shoulders and maintenance Check superelevation Perform ball-bank study	Install Warning signs/delineators Improve alignment/grade Provide proper superelevation Provide wider lanes
	Slippery surface	Check skid resistance Check for adequate drainage	Reduce speed limit if justified by spot speed study Provide adequate drainage

Accident Type	Possible Cause	Possible Study	Possible Safety Enhancement
Right-angle collisions at unsignalized intersections	Restricted sight distance	Filed observations for sight obstructions Check roadway illumination Perform spot speed study	Install warning signs Install stop signs Install yield signs Restrict parking near corners Reduce speed limit if justified by spot speed study Remove sign obstructions Install signals Install/improve street lighting Channelize intersection
	Large total intersection volume	Volume count on all approaches	Install signals
	High approach speed	Perform spot speed study	Reduce speed limit if justified by spot speed study Install rumble strips
Right-angle collisions at signalized intersections	Poor visibility of signals	Review existing signals and placement Field observation for sight obstructions Perform spot speed study	Install advanced warning devices Install visors Install back plats Reduce speed limit if justified by spot speed study Remove sight obstructions Add additional signal heads Install 12-inch signal lenses Improve location of signal heads Install overhead signals
	Inadequate signal timing	Volume count on all approaches Review signal timing	Adjust amber phase Provide all-red clearance phases Add multi-dial controller Install signal actuation Retime signals Provide progression through a set of signalized intersections

Appendix B

Department Shoulder/Slough Guidelines

3/9/07

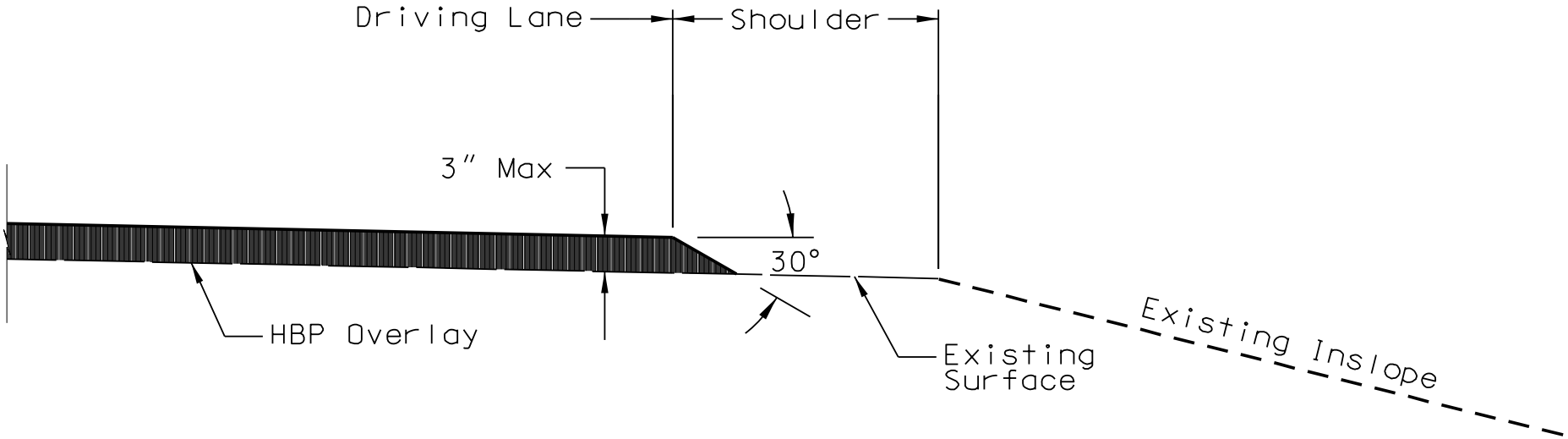

SLOUGH TREATMENT
METHOD A
With Paved Shoulder
Safety Edge - 30° to 35°
(Pub. No. FHWA-SA-05-0031)
Non-Interstate

3/9/07

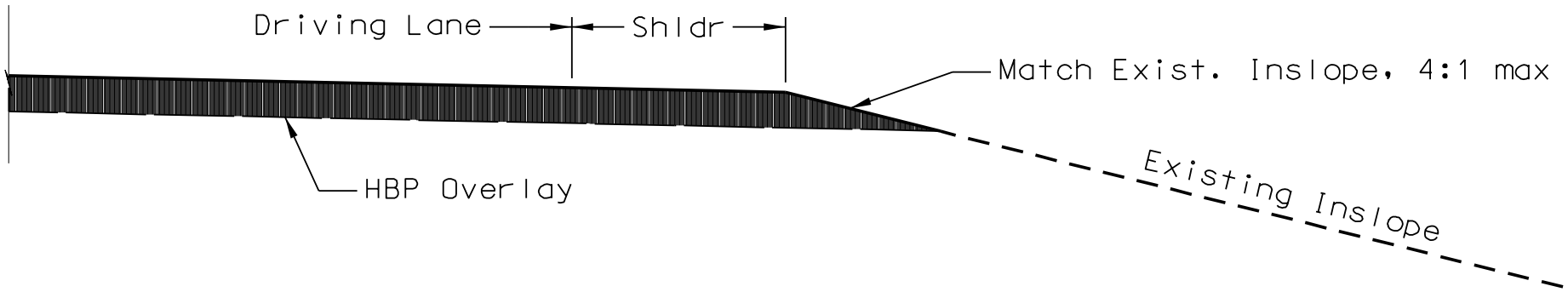

* This is the only Slough Treatment that will be applied to Interstate Overlays

SLOUGH TREATMENT
METHOD B
With Paved Shoulder
Match Existing Inslope, 4:1 max
Non-Interstate & Interstate*

3/9/07

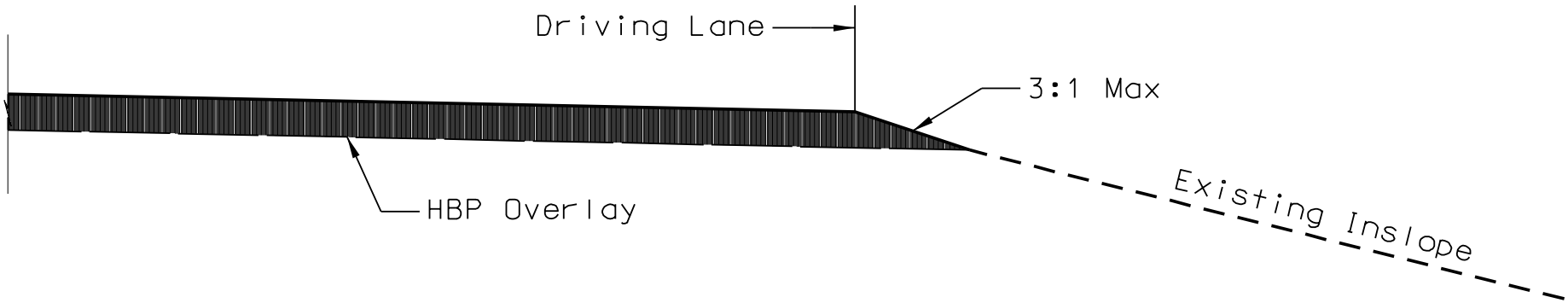

SLOUGH TREATMENT
METHOD C
No Paved Shoulder
Non-Interstate

3/9/07

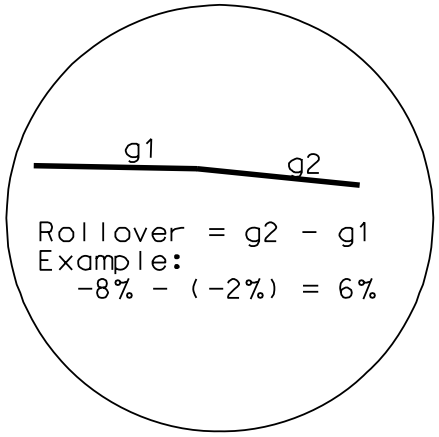

Inset A

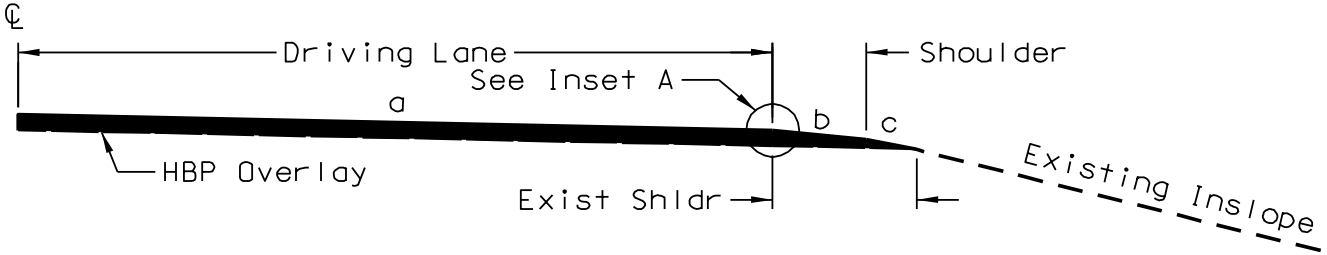

1. a = Driving lane cross-slope

2. b = PM, Mir, SI: Non-Interstate: 8% max, with 6% max rollover
   Mar: 6% max, with 5% max rollover
   Interstate: 6% max, with 5% max rollover

3. If final shoulder < 2',
   then use driving lane cross-slope

4. c = Non-Interstate: Match Exist Inslope, 3:1 max
   Interstate: 4:1 max

SHOULDER TREATMENT
METHOD 1
PM, MiR, SI, MaR
Non-Interstate & Interstate

3/9/07

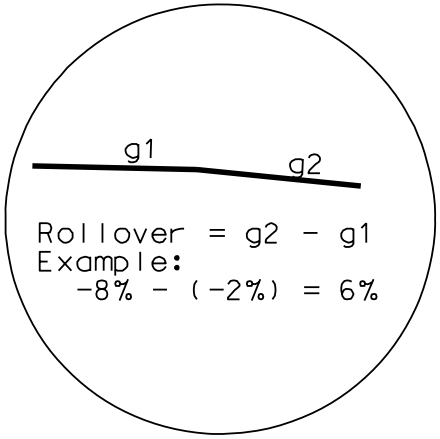

Inset A

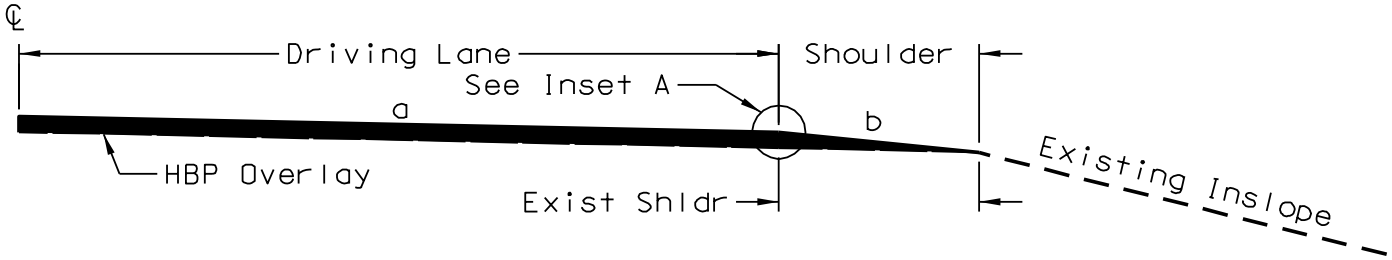

1. a = Driving lane cross-slope

2. b = Non-Interstate: 8% max, with 6% max rollover
   Interstate: 6% max, with 5% max rollover

SHOULDER TREATMENT
METHOD 2a
PM, MiR, SI
Non-Interstate & Interstate

3/9/07

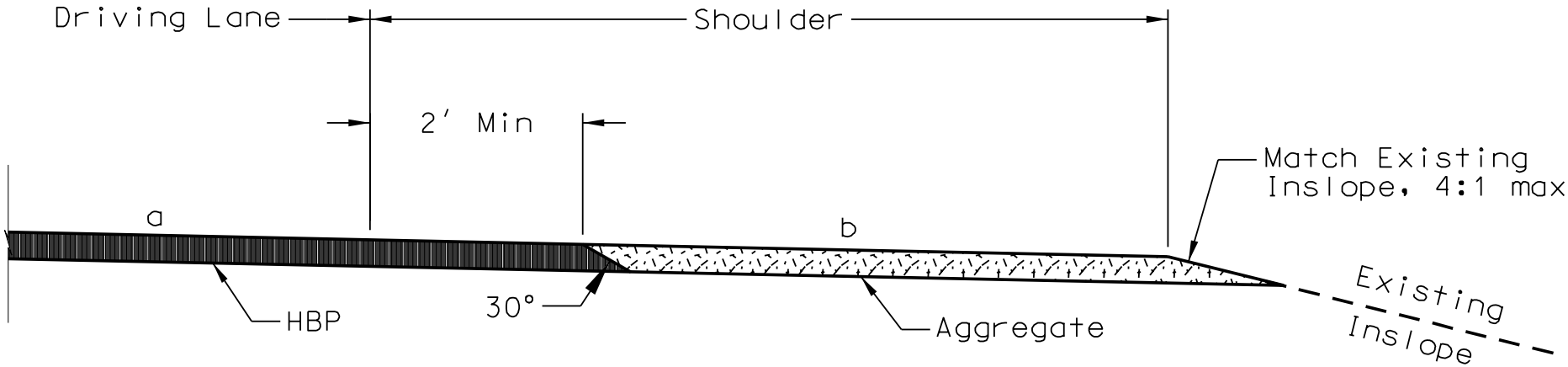

1. a = Driving lane cross-slope
2. b = PM, Mir, SI: Non-Interstate: 8% max, with 6% max rollover
   Mar: 6% max, with 5% max rollover

SHOULDER TREATMENT
METHOD 2b
SI, MaR
Aggregate Shoulders
Non-Interstate

3/9/07

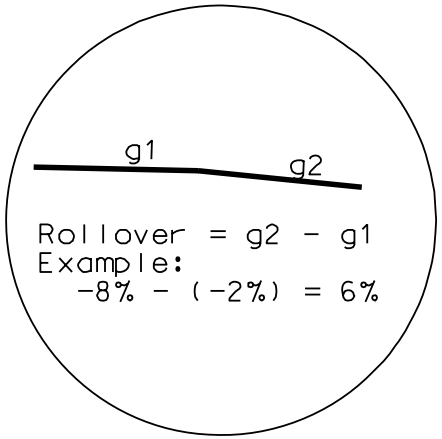

Inset A

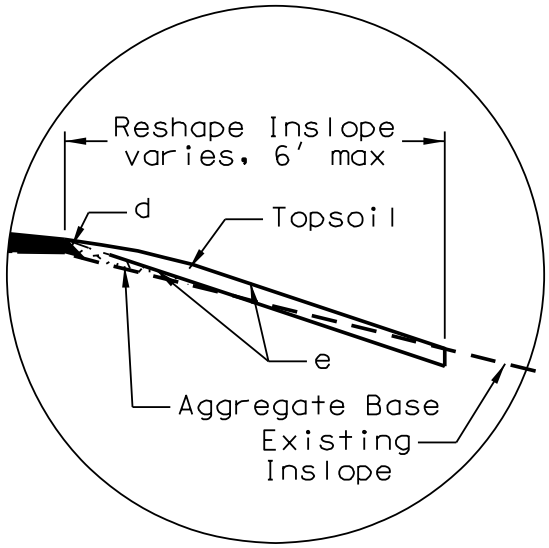

Option A

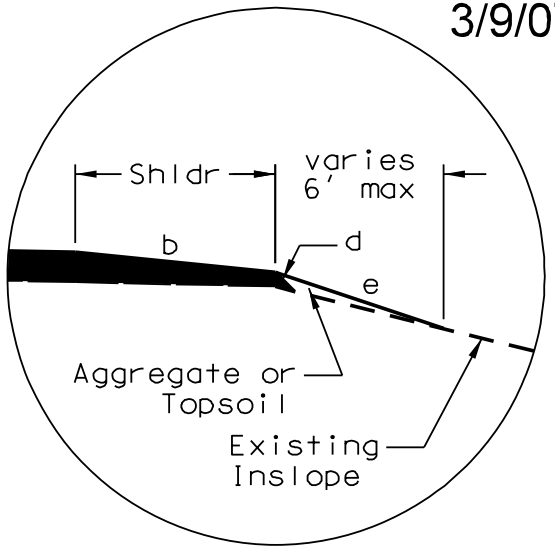

Option B

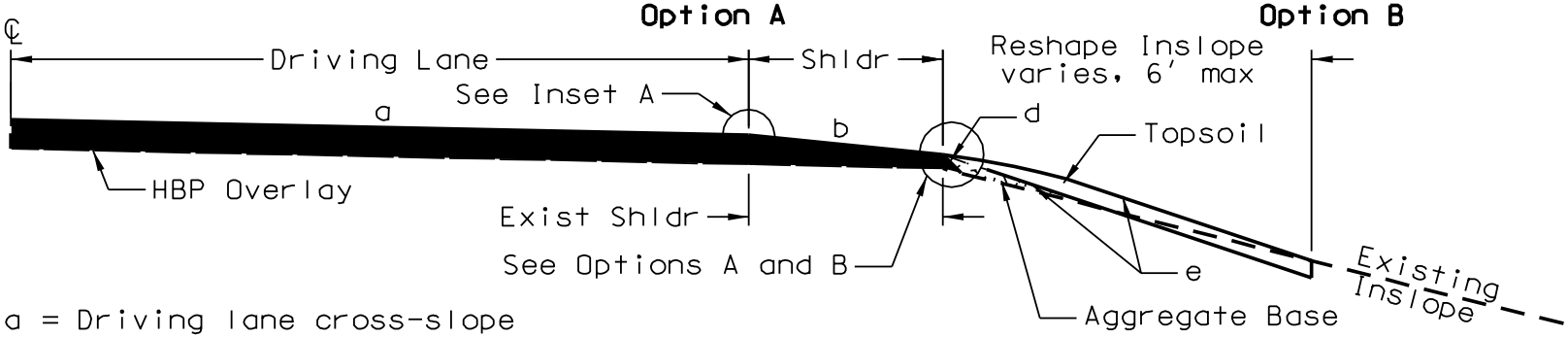

1. a = Driving lane cross-slope
2. b = Non-Interstate: 8% max, with 6% max rollover
   Interstate: 6% max, with 5% max rollover
3. If final shoulder < 2',
   then use driving lane cross-slope
4. d = 45°
5. e = Non-Interstate: 3:1 max
   Interstate: 4:1 max

SHOULDER TREATMENT
METHOD 3
PM, MiR, SI
Non-Interstate & Interstate
Original Overlay
Existing shoulder is flush

3/9/07

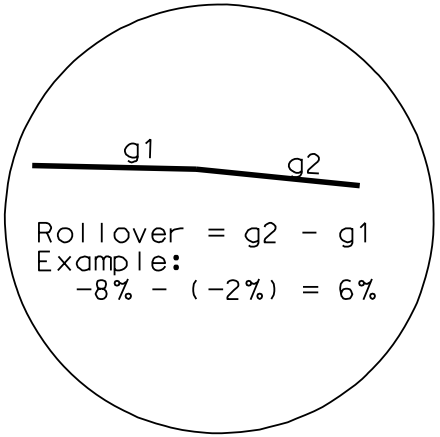

Inset A

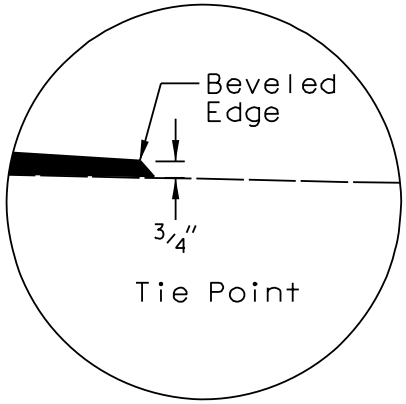

Inset B

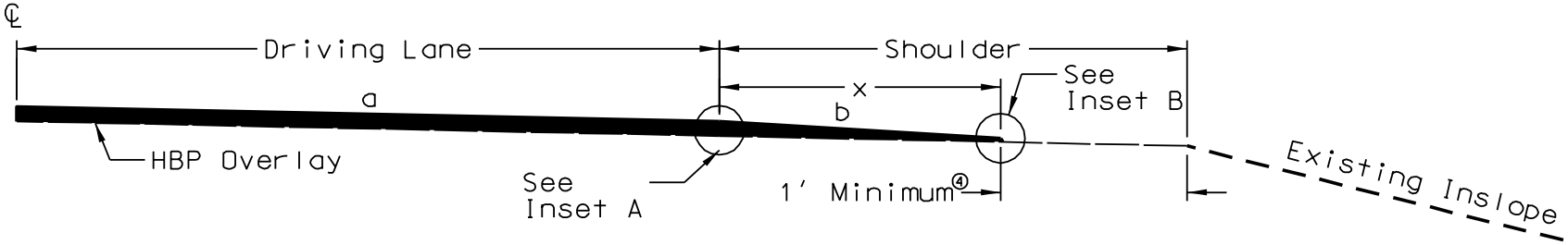

1. a = Driving lane cross-slope

2. b = Proposed shoulder cross-slope

3. $x = x(ft) = \dfrac{\text{overlay thickness (ft)} - (3/4'' \times 1'/12'')}{\text{"b" ('/') - slope of existing shoulder ('/')}}$

4. If the distance from the edge of the overlay to the pavement is less than 1' then consider a different Shoulder Treatment.

SHOULDER TREATMENT
METHOD 4
PM, MiR
Non-Interstate & Interstate

3/9/07

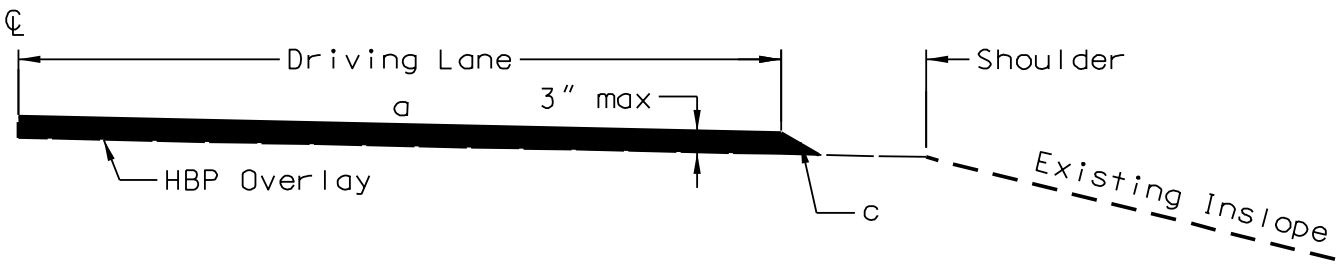

1. a = Driving lane cross-slope
2. c = 30° Safety Edge max, slough treatment

SHOULDER TREATMENT
METHOD 5
PM, MiR, SI
Non-Interstate

3/9/07

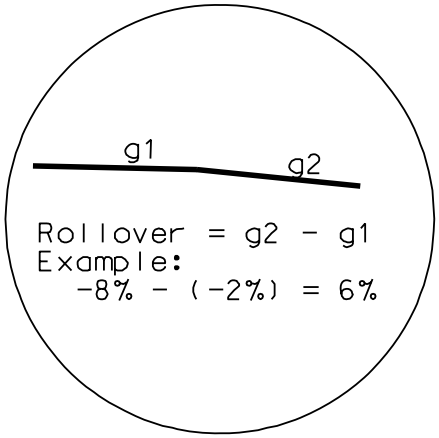

Inset A

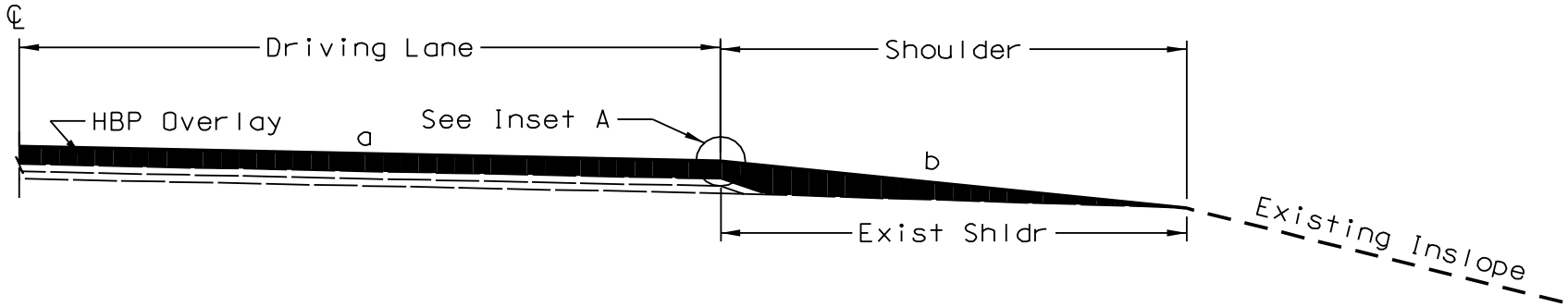

1. a = Driving lane cross-slope

2. b = PM, MiR, SI: 8% max, with 6% max rollover
   MaR: 6% max. with 5% max rollover

SHOULDER TREATMENT
METHOD 6a
PM, MiR, SI, MaR
Non-Interstate

3/9/07

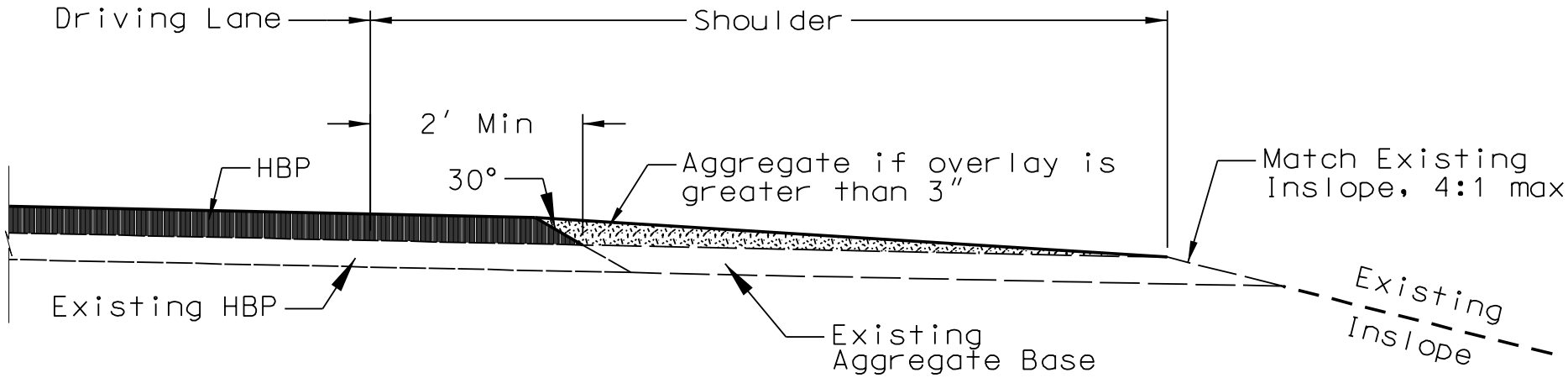

1. a = Driving lane cross-slope

SHOULDER TREATMENT
METHOD 6b
PM, MiR, SI, MaR
Aggregate Shoulders
Non-Interstate

3/9/07

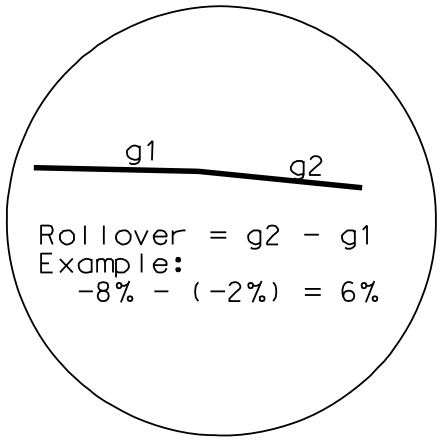

Inset A

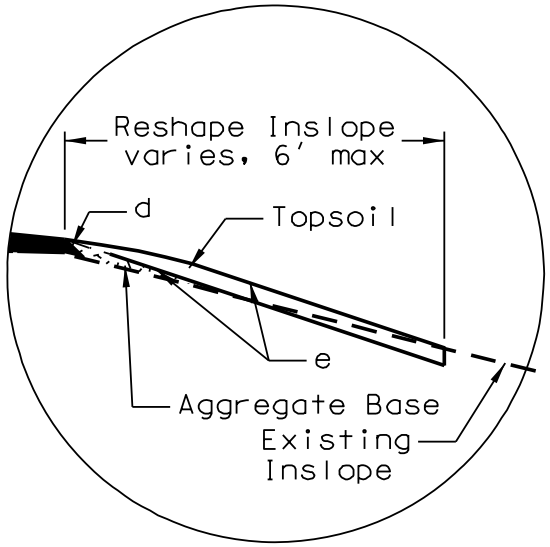

Option A

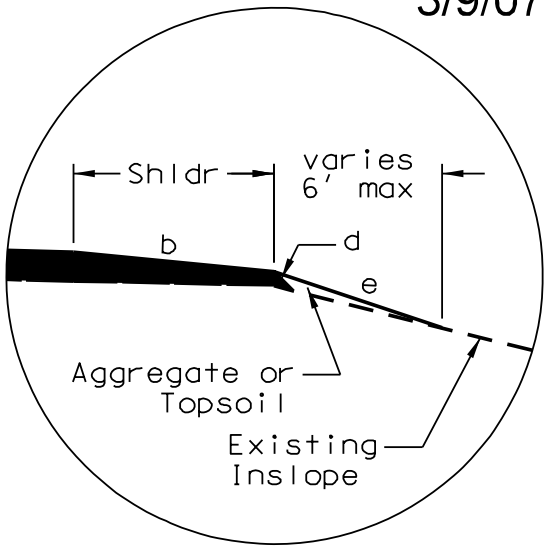

Option B

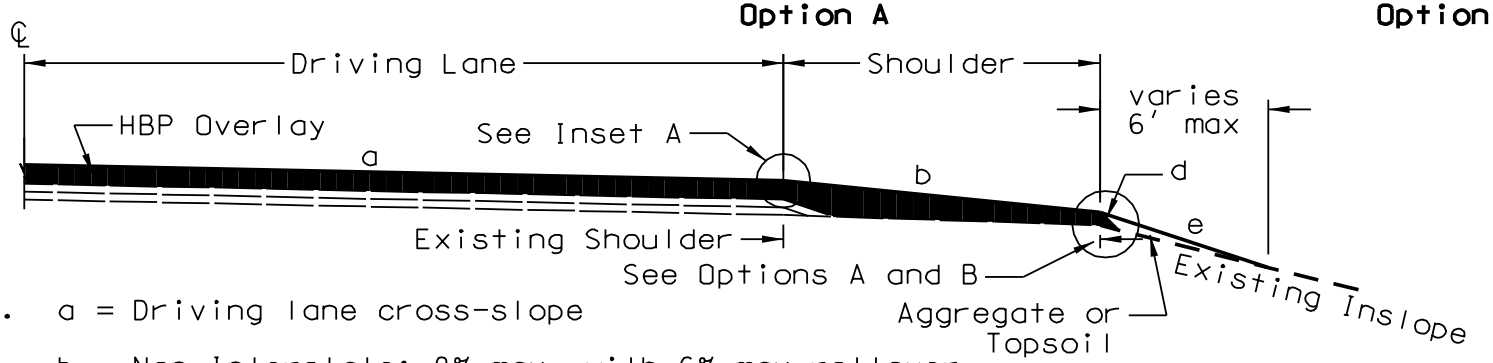

1. a = Driving lane cross-slope
2. b = Non-Interstate: 8% max, with 6% max rollover
   Interstate: 6% max, with 5% max rollover
3. If final shoulder < 2',
   then use driving lane cross-slope
4. d = 45°
5. e = Non-Interstate: 3:1 max
   Interstate: 4:1 max

SHOULDER TREATMENT
METHOD 7
PM, MiR, SI
Non-Interstate & Interstate
Multiple Overlays
Existing shoulder not flush

3/9/07

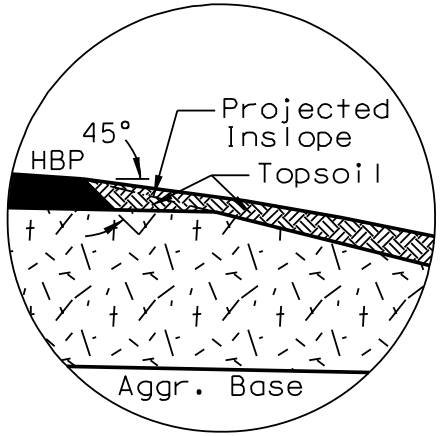

Inset D

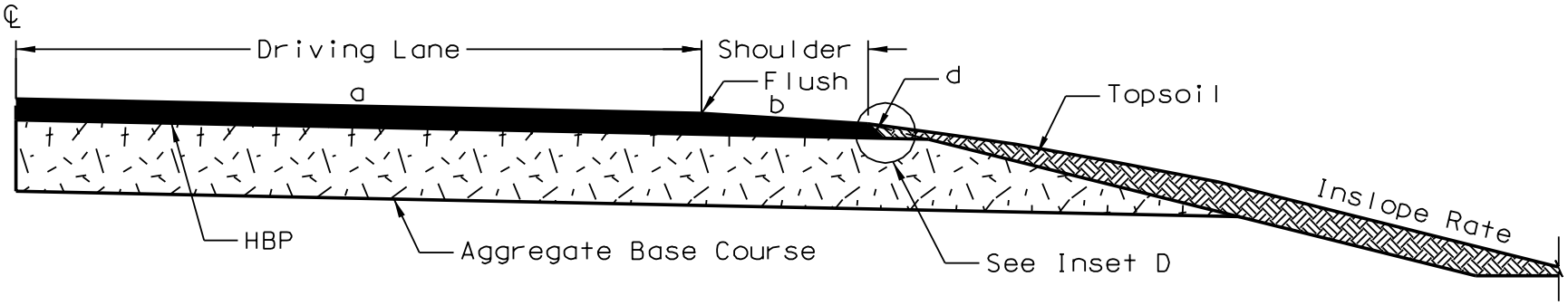

1. a = 1.5% to 2.5% Driving lane cross-slope
2. b = Recommend 3%, 6% max, with 5% max rollover
3. d = 45°

SHOULDER TREATMENT
METHOD 8a
NR
Non-Interstate

3/9/07

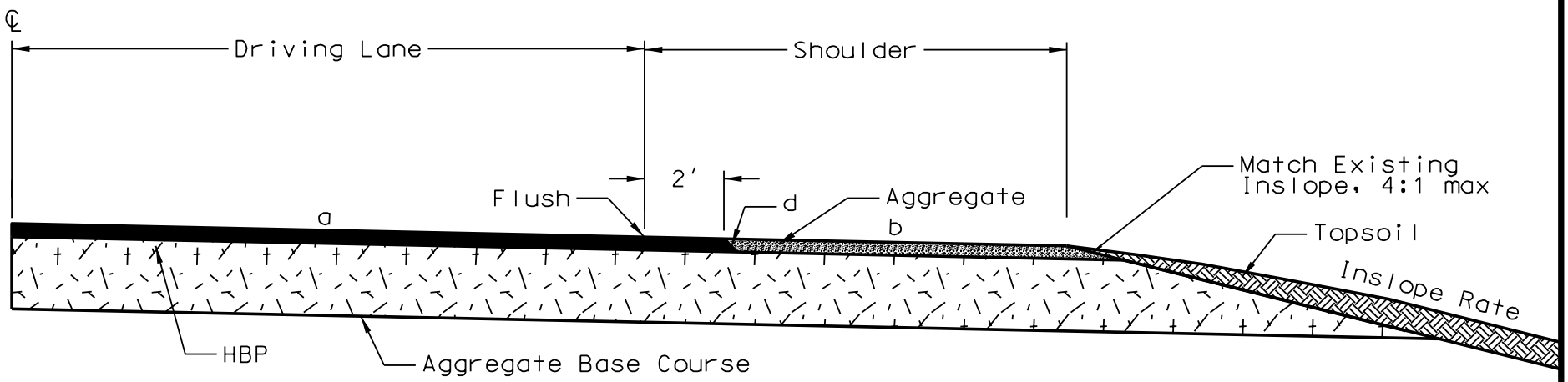

1. a = 1.5% to 2.5% Driving lane cross-slope
2. b = 4%-6%
3. d = 45°

SHOULDER TREATMENT
METHOD 8b
NR
Non-Interstate
Aggregate Shoulders