NORTH DAKOTA
DEPARTMENT OF TRANSPORTATION

MATERIALS AND RESEARCH DIVISION

Experimental Study ND 07-01

High Density Polyethylene Pipe

Final Evaluation

Project AC-HPP-NH-5-012(031)054

February 2013

Prepared by

NORTH DAKOTA DEPARTMENT OF TRANSPORTATION
BISMARCK, NORTH DAKOTA
www.dot.nd.gov

INTERIM DIRECTOR
Grant Levi, P.E.

MATERIALS AND RESEARCH DIVISION
Ron Horner, P.E.

Page intentionally left blank.

Experimental Study ND 07-01

High Density Polyethylene Pipe

Final Evaluation

Project AC-HPP-NH-5-012(031)054

February 2013

Written by

Andrew Mastel

Jared Loegering

Page intentionally left blank.

Disclaimer

The contents of this report reflect the views of the author or authors who are responsible for the facts and the accuracy of the data presented herein. The contents do not reflect the official views of the North Dakota Department of Transportation or the Federal Highway Administration. This report does not constitute a standard, specification, or regulation.

Page intentionally left blank.

U.S. DEPARTMENT OF TRANSPORTATION
FEDERAL HIGHWAY ADMINISTRATION

EXPERIMENTAL PROJECT REPORT

EXPERIMENTAL PROJECT	EXPERIMENTAL PROJECT NO.							CONSTRUCTION PROJ NO	LOCATION
		STATE	Y EAR		NUMBER	SURF			
	1	ND	2007	-	01			AC-HPP-NH-5-012(031)054 8	Adams 28 County
	EVALUATION FUNDING							NEEP NO.	PROPRIETARY FEATURE?
		1	HP&R		3	DEMONSTRATION			Yes
	48	2 x	CONSTRUCTION		4	IMPLEMENTATION		49	51 X No
SHORT TITLE	TITLE 52	High Density Polyethylene Pipe							
THIS FORM	DATE	MO.		YR.	REPORTING				
	140	September	--	2012	1 INITIAL	2 ANNUAL	3 X FINAL		
KEY WORDS	KEY WORD 1 145 HDPE				KEY WORD 2 167 Pipe				
	KEY WORD 3 189				KEY WORD 4 211				
	UNIQUE WORD 233				PROPRIETARY FEATURE NAME 255				
CHRONOLOGY	Date Work Plan Approved	Date Feature Constructed:	Evaluation Scheduled Until:	Evaluation Extended Until:	Date Evaluation Terminated:				
	6/2006	Summer 2007	Summer 2012						
	277	281	285	289	293				
QUANTITY AND COST	QUANTITY OF UNITS (ROUNDED TO WHOLE NUMBERS)		UNITS		UNIT COST (*Dollars, Cents*)				
	24" - $33.06 18" - $29.67 30" - $46.50 297		1 X LIN. FT 2 SY 3 SY-IN 4 CY 305	5 TON 6 LBS 7 EACH 8 LUMP SUM	306				
AVAILABLE EVALUATION REPORTS	CONSTRUCTION		PERFORMANCE		FINAL				
	315 X		X		x				
EVALUATION	CONSTRUCTION PROBLEMS				PERFORMANCE				
	1 NONE				1 EXCELLENT				
	2 SLIGHT				2 GOOD				
	3 x MODERATE				3 X SATISFACTORY				
	4 SIGNIFICANT				4 MARGINAL				
	318 5 SEVERE				319 5 UNSATISFACTORY				
APPLICATION	1 ADOPTED AS PRIMARY STD.		4 X PENDING		*(Explain in remarks if 3, 4, 5, or 6 is checked)*				
	2 PERMITTED ALTERNATIVE		5 REJECTED						
	3 ADOPTED CONDITIONALLY		6 NOT CONSTRUCTED						
	320								
REMARKS	321 The HDPE pipes were tested for construction acceptance on 10/20/07. Deflection testing was conducted over a 5 year period as a monitor of the HDPE pipe performance. The results from the latest testing were: The 5% mandrel could pass through one of the 18" approach pipes, both centerline 24" pipes, and one of the 30" centerline pipes. The 7.5% mandrel was able to pass through all pipelines except at two 18" approach pipes at locations 2 and 8.								

Form FHWA 1461

Page intentionally left blank.

Table of Contents

Purpose and Need 1

Objective 1

Scope 2

Location 3

Design Summary 4

Evaluation 4

Construction Summary 5

Cost 7

Post Construction Evaluation 8

1st Evaluation 10

2nd Evaluation 12

3rd Evaluation 15

4th Evaluation 17

Final Evaluation 19

Summary 21

Appendix A: Standard Drawing D-714-14 28

Page intentionally left blank.

Final Evaluation
High Density Polyethylene Pipe
ND 07-01

Purpose and Need

Due to the rising construction costs and a high demand for construction materials, the North Dakota Department of Transportation (NDDOT) has been looking for alternatives to current culvert materials. The NDDOT has not used HDPE pipe extensively in the past for this type of application. With continued improvements in material properties, high density polyethylene (HDPE) pipe may be a viable alternative for approach applications. This experimental study will be used to evaluate the installation and monitor the performance of HDPE pipe for approach and centerline drainage.

Objective

Previous research conducted by Ohio Research Institute for Transportation and the Environment (ORITE) studied 18 thermoplastic pipes. In their study the 18 thermoplastic pipes were instrumented and monitored beneath roadway embankment in Ohio University's research facility in Athens, Ohio.

They found that deflections in all of the pipes stabilized within 45 days after completion of construction, except for one pipe, which stabilized in 100 days because it was subjected to additional load from heavy equipment during construction. The change in diameter for each pipe was less than 30.5 mm (1.2 in.) over a period of eight months.

The objective of this research is to determine if HDPE has the structural capacity and durability to perform as an alternative to corrugated steel pipe (CSP) and reinforced concrete pipe (RCP) for culvert applications. This research will also evaluate the proposed installation detail for HDPE pipe.

Scope

For the evaluation of HDPE, four centerline pipes and four approach pipes are specified as HDPE pipe for project AC-HPP-NH-5-012(031)054, to be constructed in 2007. The installation of the eight HDPE pipes (AASHTO M 294-Type S) will be monitored, and the performance of the pipe will be evaluated and documented. Deflection testing will be performed by the contractor on the installed HDPE pipe as required in the NDDOT Standard Specifications.

Location

The project is located in Adams County from the Adams County line to Hettinger. The project is on US Highway 12 from reference points 54.116 to 73.455. The project length is 19.339 miles.

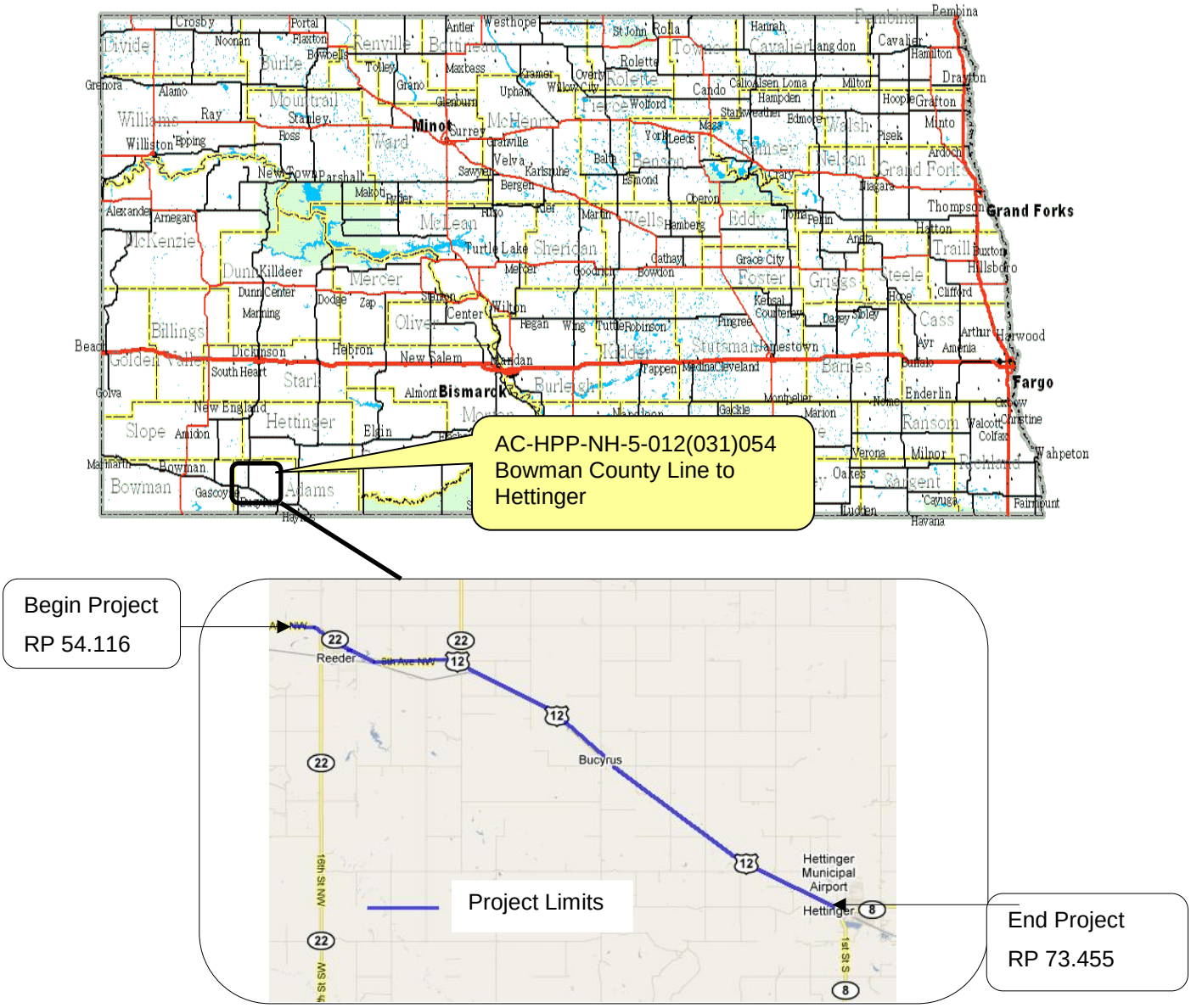

Design Summary

The design for HDPE pipe for this project was based on the manufacturer's recommendations, state DOTs' current practices, and various other research. The structural design of the corrugated polyethylene pipe required for this project meets AASHTO's *LRFD Bridge Design Specifications*, Section 12, and also conforms to AASHTO M 294 standard specification for corrugated polyethylene pipe.

Evaluation

Deflection Testing

The HDPE pipes on this NDDOT project were to be evaluated annually for a period of 5 years. The performance evaluation was to be based on the results of the deflection testing and visual condition of the pipes. The HDPE pipes were tested for deflection in accordance with section 714.03.A.9 of the NDDOT Standard Specifications. The specification requires a maximum deflection of less than 5% of the inside diameter of the pipe. The deflection testing was conducted with the assistance of the pipe manufacturer, who provided the proper sized 9-point mandrels. The mandrels used were 5% less than the nominal diameter of the pipe. Nominal diameter is identified by AASHTO M-294 as the stated inside diameter. AASHTO M-294 also identifies allowable tolerances for the pipe, which includes a 4.5% oversized tolerance and a 1.5% undersized tolerance. Table 1 below shows the pipe diameters along with the mandrel size diameters used to test the deflection of the pipes.

Pipe Diameter	Mandrel Diameter (5% less than nominal)	Mandrel Diameter (5% less than tolerance)	Mandrel Diameter (7.5% less than nominal)	Mandrel Diameter (7.5% less than tolerance)
18"	17.1"	16.84"	16.65"	16.39"
24"	22.8"	22.46"	22.20"	21.86"
30"	28.5"	28.05"	27.75"	27.31"

Table 1: Pipe Diameters along with the mandrel diameter used to test for deflection.

Pavement Profile Testing

Pavement profile data was collected during the annual evaluations using an Ames lightweight and/or high speed profiler.

Construction Summary

Project AC-HPP-NH-5-012(031)054 was constructed in the summer of 2007. The prime contractor was Border States Paving Co. of Fargo, ND. The sub-contractor that installed the pipe was Harold H. Schwartz Construction, Inc. of New England, ND. On September 25, 2007 Scott Middaugh and Steven Henrichs of the NDDOT Materials & Research Division along with Jeff Hammer, Territory Manager of the HDPE pipe manufacturer, ADS, Inc. observed the installation of a 24” HDPE centerline pipe. The project engineer was Jason Fischer and the district engineer was Larry Gangl.

Design of the pipes called for centerline and approach pipes to be installed with aggregate backfill. The approach pipes were not installed with aggregate backfill. Ordinary backfill (native soil) was used to install the four HDPE approach pipes. The left approach pipe at RP 68+1506 was removed and reinstalled in June 2008 due to excess deflection. Aggregate backfill was used. The backfill detail D-714-14 for HDPE pipe at the time of construction is included in Appendix A.

The HDPE pipes that were installed are as follows:

HDPE Pipe Location			Pipe Description	Pipe Length (ft.)
Location #	Reference Point	Station		
1	68+1506	3605 +58	18" South approach pipe	60 ft.
2	68+5472	3645 +24	18" South approach pipe	60 ft.
3	71+1646	3764 +02	24" centerline pipe	86 ft.
4	71+2457	3772 +13	30" centerline pipe	85 ft.
5	71+3060	3778 +16	24"centerline pipe	92 ft.
6	71+3843	3785 +99	30" centerline pipe	84 ft.
7	72+3385	3835 +59	18" South approach pipe	60 ft.
8	72+3385	3835 +59	18" North approach pipe	78 ft.

Table 2 - Pipe location, size, and length

Photo 1: Centerline HDPE pipe being installed

Photo 2: Metal End Section of HDPE pipe.

Cost

Included in the cost comparison below are the pipe, trench excavation, disposal of unsuitable excavated material on inslope, backfill of suitable excavated material, corrugated steel end sections, and concrete end sections. The cost comparison of the HDPE pipe to RCP is shown in Table 3 below:

Pipe Diameter	HDPE Pipe Price		RCP Price	
	Pipe (LF)	End Section (ea.)	Pipe (LF)	End Section (ea.)
18"	$29.67	incidental	$62.09	$655.09
24"	$33.06	$279.13	$100.21	$702.59
30"	$46.50	$417.61	$110.67	$794.24

Table 3 - Cost comparison of HDPE pipe to RCP

Post Construction Evaluation

Deflection Testing

The initial deflection testing on this project was performed for construction acceptance. Jason Fisher and other Dickinson District personnel along with the pipe manufacturer (ADS Hancor) representative performed deflection testing on the HDPE pipes on 10/20/2007. Table 4 in the report summary shows the results of the construction acceptance deflection testing and the annual performance evaluations.

18” approach pipes (locations 1, 2, 7, and 8)

Location 1:

The pipe was not installed in accordance with the standard drawing D-714-14. Ordinary backfill (native soil) was used instead of aggregate. The 5% less than nominal mandrel did not pass through the pipe 15 ft. from both ends of the pipe. The pipe was scheduled to be reset in 2008.

Location 2:

The pipe was not installed in accordance with the standard drawing D-714-14. Ordinary backfill (native soil) was used instead of aggregate. The 5% less than nominal mandrel was able to pass through the pipe.

Location 7:

Same as location 2.

Location 8:

Same as location 2.

24” Centerline Pipes (locations 3 and 5)

Location 3:

This pipe was installed correctly in accordance with the standard drawing D-714-14 with aggregate backfill. The 5% less than nominal mandrel was able to pass through the pipe.

Location 5:

Same as location 3.

30” Centerline Pipes (locations 4 and 6)

Location 4:

This pipe was installed correctly in accordance with the standard drawing D-714-14 with aggregate backfill. The mandrel supplied by the contractor for the 30” pipe was too heavy and difficult to pull through the pipe. Instead the Project Engineer cut a lath to 5% less than nominal (28.5”) and crawled through the pipe. The lath did not pass through the pipe 6 ft. from the south end of the pipe. The pipe was deflected to approximately 27.5” and there was a 1.5” opening present between the seams of the pipe. This pipe was excavated and the pipe returned to its original shape. It was then re-laid and passed inspection.

Location 6:

This pipe was installed correctly in accordance with the standard drawing D-714-14 with aggregate backfill. The lath cut to 5% less than nominal size was able to pass through the pipe. A deflection was located approximately 6’-10’ from the south end of the pipe. The deflection measured 28.5” which is still passing.

Pavement Profile Testing

Materials and Research personnel collected pavement profile data in the fall of 2007 with their Ames Lightweight Profiler. This data is located in Table 5 in the report summary.

1st Evaluation-2008

Deflection Testing

Materials and Research personnel, Dickinson District personnel and the pipe manufacturer representative Roger Baldwin from ADS Hancor, performed deflection testing on the HDPE pipes on 07/23/2008. The pipe manufacturer representative brought an adjustable mandrel which was adjustable to two sizes, 5% less than nominal, and 8% less than nominal. This mandrel was used in the 18” and 24” HDPE pipes to test for deflection. A lath (cut to 5% less than nominal) was used to evaluate the 30” HDPE pipes.

The areas where the mandrel did not pass through were usually near a pipe joint.

18” approach pipes (locations 1,2,7, and 8)

Location 1:

The pipe at location 1 was reinstalled in late May or early June of 2008 due to deflection issues during initial construction. Once the pipe was removed it returned to its original shape and was reinstalled. The approach pipe detail D-714-14 in Appendix A was used. The 5% less than nominal mandrel was able to pass through this pipe after it was replaced.

Location 2:

The 5% less than nominal mandrel was unable to pass through approximately 20 ft. in from the east and west end of the pipe. The 8% less than nominal mandrel was able to pass through the pipe.

Location 7:

The 5% less than nominal mandrel did not pass through at approximately 20 ft. in from the east end of the pipe.

Location 8:

The 5% less than nominal mandrel did not pass through at approximately 19 ft. in from the east and west ends of the pipe.

24” Centerline Pipes (locations 3 and 5)

Location 3:

The 5% less than nominal mandrel was able to pass through the pipe.

Location 5:

Same as location 3.

30” Centerline Pipes (locations 4 and 6)

Location 4:

The pipe was too muddy to crawl through to properly inspect for deflection.

Location 6:

The pipe passed inspection using a lath cut to 5% less than nominal (28.5”).

Pavement Profile Testing

Materials and Research personnel collected profile data in June of 2008. The pavement profile over the pipes is significantly worse. This is probably due to embankment settlement. Table 5 in the report summary has the most current profile data.

2nd Evaluation-2009

Deflection Testing

Photo 3:End Section of Pipe

Materials and Research personnel, along with the pipe manufacturer's representative, deflection tested the HDPE pipes on 08/31/2009. The representative provided three mandrels sized 5% less than the nominal diameter of the 18", 24", and 30" pipes. A lath (cut to 5% less than nominal diameter) was used to evaluate the 30" HDPE pipes because the 30" mandrel measured 27.11" which was less than the required 28.5 in.

The areas where the mandrel did not pass through were usually near a pipe joint.

18" approach pipes (locations 1,2,7, and 8)

Location 1:

The 5% less than nominal mandrel was able to pass through the pipe. Deflection and visual condition of the pipe were similar to the 2008 observations.

Location 2:

The 5% less than nominal mandrel was unable to pass through the pipe approximately 20 ft. in from the east end and 13.5 ft. in from the west end of the pipe. Deflection and visual condition of the pipe were similar to the 2008 observations.

Location 7:

The 5% less than nominal mandrel passed through the pipe when pulling from west to east. When performing the mandrel test from east to west it did not pass through at 18 ft. in from the east end of the pipe, which is similar to the 2008 condition.

Location 8:

The 5% less than nominal mandrel did not pass through at 17 ft. in from the east end and 17 ft. in from west end which was similar to the 2008 condition. Water was standing in the pipe 17 ft. in from the west end.

24” Centerline Pipes (locations 3 and 5)

Location 3:

The 5% less than nominal mandrel was able to pass through the pipe. Deflection and visual condition of the pipe were similar to the 2008 observations.

Location 5:

The 5% less than nominal mandrel successfully passed through the pipe. The pipe had water standing in the bottom of the pipe at the north end. Deflection and visual condition of the pipe were similar to the 2008 observations.

30” Centerline Pipes (locations 4 and 6)

Location 4:

The pipe did not pass inspection using a lath cut to 5% less than nominal size at 8 ft. in from the south end of the pipe.

Location 6:

The pipe passed inspection using a lath cut to 5% less than nominal size (28.5”). The deflection and visual condition of the pipe were similar to the 2008 observations.

Pavement Profile Testing

Materials and Research personnel collected pavement profile data in 2009 with the Ames High Speed Profiler. This data is located in Table 5 in the report summary. Although there was no measurable change in pipe deflection, the IRI at the pipe locations continued to increase. This seems to indicate changes in the road profile were caused by settlement in the embankment materials.

3rd Evaluation-2010

Deflection Testing

Materials and Research personnel, along with the pipe manufacturer's representative, deflection tested the HDPE pipes on 09/29/10. The representative provided two mandrels sized 5% less than the nominal diameter of the 18"and 24" pipes. A lath (cut to 5% less than nominal diameter) was used to evaluate the 30" HDPE pipes.

The areas where the mandrel did not pass through were usually near a pipe joint.

18" approach pipes (locations 1, 2, 7 and 8)

Location 1:

The 5% less than nominal mandrel was able to pass through the pipe. Deflection and visual condition of the pipe was similar to the 2009 observations.

Location 2:

The 5% less than nominal mandrel was not able to pass through the pipe at approximately 4.5 ft. in from the east end and 12.5 ft. in from the west end of the pipe.

Location 7:

The 5% less than nominal mandrel it did not pass through at 16.5 ft. in from the east end and 16 ft. in from the west end of the pipe.

Location 8:

The 5% less than nominal mandrel did not pass through at 13.5 ft. in from the east end.

24" Centerline Pipes (locations 3 and 5)

Location 3:

The 5% less than nominal mandrel was able to pass through the pipe. The deflection and visual condition of the pipe was similar to the 2009 observations.

Location 5:

Same as location 3.

30” Centerline Pipes (locations 4 and 6)

Location 4:

The pipe did not pass inspection using a lath cut to 5% less than nominal size at 8 ft. in from the south end of the pipe. The deflection and visual condition of the pipe were similar to the 2009 observations.

Location 6:

The pipe passed inspection using a lath cut to 5% less than nominal size (28.5”). The deflection and visual condition of the pipe were similar to the 2009 observations.

Pavement Profile Testing

Materials and Research personnel did not collect pavement profile data for this evaluation. Table 5 in the report summary has profile data collected from other evaluation periods.

4th Evaluation-2011

Deflection Testing

Materials and Research personnel, along with the pipe manufacturer's representative, deflection tested the HDPE pipes on 10/05/11. The representative provided several mandrels sized 5% and 7.5% less than the nominal diameter of the 18", 24" and 30" pipes. The lath was not used for this evaluation because a 7.5% mandrel was able to be used instead. In 2011 if a 5% less than nominal mandrel could not pass through the pipe a 7.5% less than nominal mandrel was then used to get a better understanding of how much deflection was occurring in the pipes.

The areas where the mandrel did not pass through were usually near a pipe joint.

18" approach pipes (locations 1,2,7, and 8)

Location 1:

The 5% less than nominal mandrel was able to pass through the pipe. The deflection and visual condition of the pipe was similar to the 2010 observations.

Location 2:

The 5% less than nominal mandrel was unable to pass through the pipe approximately 14.0 ft. in from the east end and 14.0' ft. in from the west end of the pipe. The 7.5% less than nominal mandrel was able to pass through the pipe.

Location 7:

The 5% less than nominal mandrel test did not pass through at 18.5 ft. in from the east end of the pipe but the 7.5% less than nominal mandrel did pass through the pipe.

Location 8:

The 5% less than nominal mandrel did not pass through at 16.5 ft. in from the east end and 16.5 ft. from the west end. The 7.5% less than nominal mandrel was able to pass through the pipe.

24” Centerline Pipes (locations 3 and 5)

Location 3:

The 5% less than nominal mandrel was able to pass through the pipe. The deflection and visual condition of the pipe was similar to the 2010 observations.

Location 5:

Same as location 3.

30” Centerline Pipes (locations 4 and 6)

Location 4:

The 5% less than nominal mandrel did not pass through at 8 ft. in from the south end of the pipe. The 7.5% less than nominal mandrel was able to pass through the pipe. The deflection and visual condition of the pipe were similar to the 2010 observations.

Location 6:

The 5% less than nominal mandrel did pass through the pipe. The deflection and visual condition of the pipe were similar to the 2010 observations.

Pavement Profile Testing

Materials and Research collected profile data in 2011 with the Ames High Speed Profiler. This data is located in Table 5 in the report summary.

Final Evaluation-2012

Deflection Testing

Materials and Research personnel, along with the pipe manufacturer's representative, deflection tested the HDPE pipes on 09/20/12. The representative provided several mandrels for the 18", 24" and 30" pipes. The mandrels used for the 2012 testing were 5% and 7.5% less than the minimum tolerance described by AASHTO M-294, which is 1.5% less than nominal size. In 2012 if a 5% less than tolerance mandrel could not pass through the pipeline a 7.5% less than tolerance mandrel was then used to get a better understanding of how much deflection was occurring in the pipelines. Table 4 in the report summary summarizes all of the deflection tests.

The areas where the mandrel did not pass through were usually near a pipe joint.

18" approach pipes (locations 1, 2, 7, and 8)

Location 1:

The 5% less than tolerance mandrel was able to pass through the pipe. The deflection and visual condition of the pipe was similar to the 2011 observations.

Location 2:

The 5% less than tolerance mandrel was unable to pass through the pipe. The 7.5% less than tolerance mandrel did not pass through the pipe 25.0 ft. in from the east end and 16.0 ft. in from the west end of the pipe. Even though the pipe was deflected, the performance of the pipe was not affected.

Location 7:

The 5% less than tolerance mandrel did not pass through at 21.0 ft. in from the east end of the pipe but the 7.5% less than tolerance mandrel did pass through the pipe. The deflection and visual condition of the pipe was similar to the 2011 observations.

Location 8:

The 5% less than tolerance mandrel did not pass through the pipe. The 7.5% less than tolerance mandrel was unable to pass through the pipe 17.5 ft. in from the west end of the pipe.

24” Centerline Pipes (locations 3 and 5)

Location 3:

The 5% less than tolerance mandrel was able to pass through the pipe. The deflection and visual condition of the pipe was similar to the 2011 observations.

Location 5:

Same as location 3, except there was some debris in the pipe, although it did not seem to be enough to inhibit water flow in the pipe.

30” Centerline Pipes (locations 4 and 6)

Location 4:

The 5% less than tolerance mandrel did not pass through at 8.0 ft. in from the south end of the pipe and 75.0 ft. in from the north south end of the pipe. The 7.5% less than tolerance mandrel was able to pass through the pipe. It was noticed that the mandrel did not pass at a joint connection that either was not installed correctly or embankment settlement deformed the invert of the pipe section. The deflection and visual condition of the pipe were similar to the 2011 observations.

Location 6:

The 5% less than tolerance mandrel did pass through the pipe. The deflection and visual condition of the pipe were similar to the 2011 observations.

Pavement Profile Testing

Materials and Research personnel did not collect pavement profile data for this evaluation. A summary of the profile date can be found in Table 5 in the report summary.

Summary

The objective of this research was to determine if HDPE had the structural capacity and durability to perform as an alternative to corrugated steel pipe (CSP) and reinforced concrete pipe (RCP) for centerline and approach applications. For the evaluation of HDPE, four centerline pipes and four approach pipes were specified as HDPE pipe for project AC-HPP-NH-5-012(031)054. The approach pipes were not installed according to the plan detail which called for aggregate to be used as backfill. The approach pipes were instead installed with native material as backfill, and the approach pipe at location 1 was the only approach pipe that was reinstalled with aggregate backfill. All of the centerline pipes were installed according to the plan detail with aggregate as backfill.

The installations of the eight HDPE pipes (AASHTO M 294 Type S) were monitored, and the performance of the pipe was evaluated and documented. The NDDOT specifications require deflection testing of flexible pipe using a 9-point mandrel or other methods acceptable to the engineer. The NDDOT specifications also require that if the pipe has deformed more than 5% than it needs to be replaced. AASHTO M-294 describes the nominal inside diameter as the stated pipe size. The specification allows for additional reduction of the inside diameter of 1.5% less than the nominal diameter. For the purpose of this research, the maximum deflection was established as 5% less than the nominal diameter.

Section 30 of the AASHTO LRFD Bridge Construction Specifications states “For locations where pipe deflection exceeds five percent of the inside diameter, an evaluation shall be conducted by the Contractor utilizing a Professional Engineer and submitted to the Engineer for review and approval considering the severity of the deflection, structural integrity, environmental conditions, and the design service life of the pipe. Pipe remediation or replacement shall be required for locations where the evaluation finds that the deflection could be problematic. For locations where pipe deflection exceeds 7.5 percent of the inside diameter, remediation or replacement of the pipe is required.”

Annual performance evaluations were conducted over a 5 year period following construction. The HDPE pipes were tested for construction acceptance on 10/20/07 and for performance on 7/23/08, 08/31/09, 09/29/10, 10/05/11 and 09/20/2012. Deflection testing was conducted to determine if the pipes had deflected more than 5% of the nominal diameter at any point within each pipe. In 2011, if a 5% less than nominal mandrel could not pass through the pipe a 7.5% less than nominal mandrel was then used to get a better understanding of how much deflection was occurring in the pipes. The mandrels supplied by the manufacturer for the 2012 evaluation were 5% and 7.5% less than the minimum tolerance described by AASHTO M-294. Minimum tolerance is 1.5% less than nominal size.

The performance of each pipe over the 5 year evaluation period is summarized below:

Location 1, 18" Approach Pipe: This approach pipe was installed with native material as backfill and the 5% less than nominal mandrel was not able to pass through it after construction. The pipe was reinstalled with aggregate backfill. Since it was reinstalled with aggregate backfill in 2008, a 5% less than nominal mandrel has been able to pass through the pipe from 2008-2011. In 2012, a 5% less than tolerance mandrel successfully passed through the pipe and the pipe has been performing well.

Location 2, 18" Approach Pipe: This approach pipe was installed with native material as back fill and the 5% less than nominal mandrel successfully passed through the pipe after construction. Since then, the pipe has shown indications of increased deflection. In 2008-2011, a 5% less than nominal mandrel was not able to pass through the pipe. During the evaluation in 2011, a 7.5% less than nominal mandrel successfully passed through the pipe. In 2012, both the 5% and 7.5% less than tolerance size mandrel were not able to pass through the pipe.

Location 3, 24” CL Pipe: This centerline pipe was installed with aggregate backfill, and a 5% less than nominal mandrel has been able to pass through during the evaluation periods from 2008-2011. In 2012 the 5% less than tolerance mandrel successfully passed through the pipe. This pipe has performed well over the course of the evaluation period.

Location 4, 30” CL Pipe: This centerline pipe was installed with aggregate backfill. After construction, the 5% less than nominal mandrel did not pass through on the south end of the pipe. This was at a joint where two sections of the pipe were coming together and this section of pipe was excavated and re-laid. It was not able to be tested in 2008 due to muddy conditions. Since the second evaluation (2009), a 5% less than nominal mandrel has not been able to pass through the pipe at the same location that was re-installed. The pipe is deflecting at a joint connection and it was observed that the section of pipe was either not installed correctly or embankment settlement deformed the joint of the pipe section. A 7.5% less than nominal mandrel pulled through the pipe in 2011 was able to pass through the pipe. In 2012, a 5% less than tolerance was not able to pass through the pipe but a 7.5% less than tolerance mandrel was able to pass through the pipe.

Location 5, 24” CL Pipe: This centerline pipe was installed with aggregate backfill, and a 5% less than nominal mandrel has been able to pass through the pipe from 2008-2011. In 2012, a 5% less than tolerance mandrel successfully passed through the pipe. During the final evaluation period (2012), it was observed that there was some debris in the pipe, but it did not seem to be enough to inhibit water flow. This pipe has performed well over the course of the evaluation period.

Location 6, 30” CL Pipe: This centerline pipe was installed with aggregate backfill, and a lath cut to 5% less than nominal size was able to pass through the pipe from 2008-2010. In 2011, a 5% less than nominal mandrel was able to pass through the pipe and in 2012, a 5% less than tolerance mandrel successfully passed through the pipe. This pipe has performed well over the course of the evaluation period.

Location 7, 18" Approach pipe: This approach pipe was installed with native material as backfill and it passed the 5% less than nominal deflection test after construction. Since construction, the pipe has had mixed performance results. During the first evaluation (2008), a 5% less than nominal mandrel was not able to pass through the pipe. In 2009, a 5% less than nominal mandrel passed through the pipe if it was pulled from west to east, but failed if pulled from east to west. At the third and fourth evaluations in 2010 and 2011, a 5% less than nominal mandrel was not able to pass through the pipe. In 2011 a 7.5% less than nominal mandrel was able to pass through the pipe. In 2012, a 5% less than tolerance mandrel was not able to pass through the pipe but a 7.5% less than tolerance mandrel successfully passed through the pipe.

Location 8, 18" Approach Pipe: This approach pipe was installed with native material as backfill and it passed the 5% less than nominal deflection test after construction. Since construction, evaluations have shown an annual increase in deflection. The 5% less than nominal mandrel was not able to pass through the pipe during the 2008-2011 evaluations. However, in 2011, a 7.5% less than nominal mandrel was able to pass through the pipe. In 2012, both the 5% and 7.5% less than tolerance mandrels were not able to pass through the pipe.

Table 4 shows the summary of the deflection testing results.

Summary of Deflection Testing Results

HDPE Pipe Location			Pipe Description	Pipe Length	Deflection Testing Results (Deflection= ≤ 5%,>5%, ≤ 7.5%, or >7.5%)						
Location #	Reference Point	Station			2007	2008	2009	2010	2011	2012	2012 Comments
1	68+1506	3605 +58	18" North Approach Granular Backfill	60 ft.	>5%	≤5%	≤5%	≤5%	≤5%	≤5%	In 2008 pipe was reinstalled with granular backfill.
2	68+5472	3645 +24	18" North Approach Native Backfill	60 ft.	≤5%	>5%	>5%	>5%	>5% but ≤7.5%	>7.5%	7.5% Mandrel did not pass 25.0' in from the east and 16.0' in from the west.
3	71+1646	3764 +02	24" CL Granular Backfill	86 ft.	≤5%	≤5%	≤5%	≤5%	≤5%	≤5%	N/A
4	71+2457	3772 +13	30" CL Granular Backfill	85 ft.	≤5%	N/A	>5%	>5%	>5% but ≤7.5%	>5% but ≤7.5%	5% Mandrel did not pass 8.0' in from the south and 75' in from the north.
5	71+3060	3778 +16	24"CL Granular Backfill	92 ft.	≤5%	≤5%	≤5%	≤5%	≤5%	≤5%	Some debris in pipe.
6	71+3843	3785 +99	30" CL Granular backfill	84 ft.	≤5%	≤5%	≤5%	≤5%	≤5%	≤5%	N/A
7	72+3385	3835 +59	18" South Approach Native Backfill	60 ft.	≤5%	>5%	≤5%	>5%	>5% but ≤7.5%	>5% but ≤7.5%	5% Mandrel did not pass 21.0' in from the east end.
8	72+3385	3835 +59	18" North Approach Native Backfill	78 ft.	≤5%	>5%	>5%	>5%	>5% but ≤7.5%	>7.5%	7.5% Mandrel did not pass 17.5' in from the west end of the pipe.

Table 4: Pipe Locations and deflection testing results

Pavement Profile Measurement

In 2008, dips in the roadway appearing at pipe locations (HDPE, RCP, and Box culverts) were thought to be the result of embankment settlement. In June of 2009, the Dickinson District maintenance employees filled the dips above the pipes and box culverts with cold mix asphalt, followed by a slurry seal. Pavement profile data was collected prior to and after the 2009 repairs. Materials and Research personnel broke down the data in the eastbound direction into 25 foot lots to show a comparison of the Mean Roughness Index (MRI) data. The MRI is the IRI mean of the right and left laser of the profiler. The profile data collected in 2011 shows continued deterioration in pavement profile over the HDPE and RCP centerline pipes and box culverts in most locations. However, there does not appear to be a corresponding deflection in the pipes. This would support the theory that deterioration of the roadway profile is a result of settlement in the embankment materials around they pipes. Construction of this project was completed prior to the NDDOT's implementation of control compaction of the aggregate envelope around centerline pipe.

Table 5 below shows a summary of the profile testing results.

Summary of Profile Testing Results

	Average MRI over three 25 ft. lots					
Pipe	**RP**	**Station**	**2007 MRI**	**2008 MRI**	**2009 MRI**	**2011 MRI**
24" RCP*	70+4404	3740+22	34.9	69.47	40.65	N/A
Box Culvert*	71+0904	3756+60	41.17	51.83	75.47	243.22
24" HDPE	71+1646	3764+02	55.87	88.2	110.17	160.68
30" HDPE	71+2457	3772+13	54.53	132.1	155.1	193.91
24" HDPE	71+3060	3778+16	52.63	129.87	181.1	176.81
30" HDPE	71+3843	3785+99	61.23	189.13	184.53	191.97
24" RCP*	72+0285	3804+59	61.7	193.3	218.53	231.6
Box Culvert*	72+1558	3817+32	41.27	36.77	271.7	373.14

Table 5: IRI data over HDPE and RCP pipes

***These pipes are within the limits where profile testing has been done and are for ride comparison reasons only.**

Results from this five year study indicate:

- Proper installation of HDPE pipe is critical to maintain the pipe's circular shape. The manufacturer recommends the use of a granular material and proper compaction to develop the ring compression around the pipes. Evaluation of the HDPE approach pipes installed using native backfill material indicates varied amounts of deflection over the evaluation periods. Evaluation of the HDPE pipes installed with granular backfill material shows these pipes to have less variation while testing.
- Depressions in the pavement surface that coincided with pipe locations (HDPE, Metal, and RCP) appear to be related to settlement in the embankment material around the pipes. Evaluation of HDPE pipe at these centerline locations does not indicate a corresponding pipe deflection.
- The condition of the metal end treatments and end sections of the HDPE pipe were not negatively impacted by normal ditch and inslope maintenance activities.

Appendix A: Standard Drawing D-714-14

CORRUGATED POLYETHYLENE PIPE INSTALLATION

D-714-14

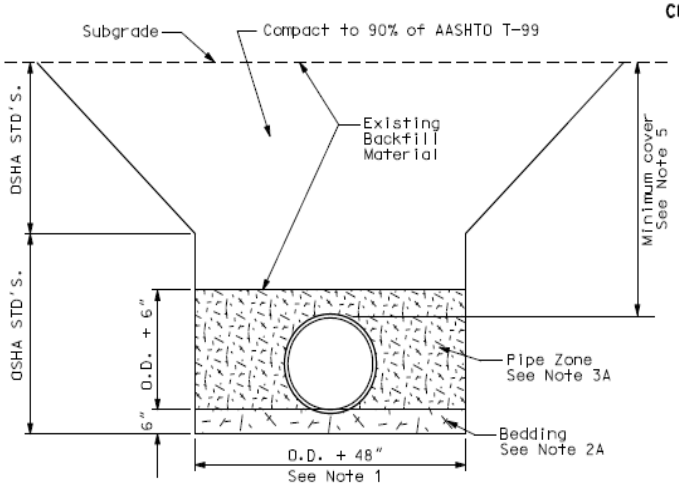

CORRUGATED POLYETHYLENE PIPE DETAIL
Alternative A: Aggregate in Pipe Zone

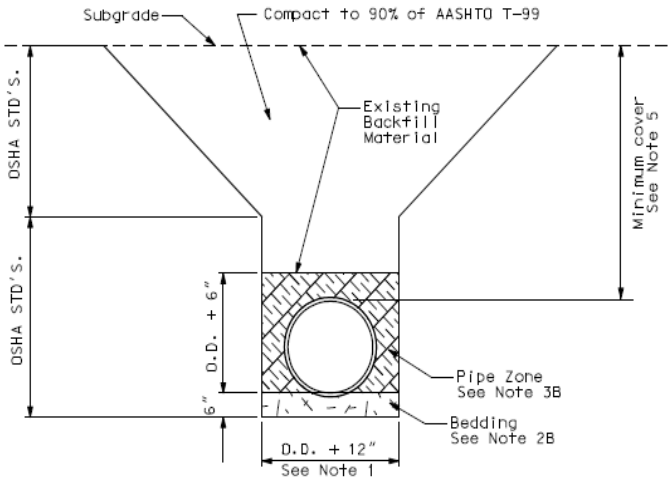

CORRUGATED POLYETHYLENE PIPE DETAIL
Alternative B: Controlled Density Fill in Pipe Zone

Notes:

1. The polyethylene pipe requires a trench installation. Embankment shall be placed prior to installing the polyethylene pipe if necessary. The minimum height of the embankment shall be to the top of the Pipe Zone. The contractor shall not be permitted to drive over the pipe until the pipe has minimum cover. Minimum trench width shall be as recommended by the pipe manufacturer or as shown on the drawing, whichever is greater.

2. Bedding material shall be Aggregate Base Course Class 3M or Class 5.

   A. Alternative A: The aggregate shall be loosely compacted to allow for pipe seating.

   B. Alternative B: The aggregate shall be graded to uniformly support the pipe, and the trench bottom recessed to fit the bell and spigot.

3. The pipe shall be laid to line and grade and secured to prevent floating or shifting of the pipe during placement of material in the Pipe Zone. Backfill material in Pipe Zone shall be Alternative A or B unless otherwise specified.

   A. Alternative A: Aggregate Base Course Class 3M or Class 5. The aggregate shall be compacted in layers not to exceed six inches using a hand-held vibratory plate compactor or a hand-held mechanical tamper.

   B. Alternative B: Controlled Density Backfill.

   The properties of the controlled density backfill shall be a blend of cement, water, pozzolanic materials, and fillers. The material shall be fluid on placement to flow around and fill the voids around pipe in the backfill area. The material shall be able to support normal loads after six hours and have a compressive strength in the range of 75 psi to 125 psi at 28 days. The material shall be such that it lends itself to easy removal with a tractor backhoe. If the mix design shown is used, no further testing will be required. The mix design yields approximately one cubic yard of flowable mortar.

   MIX DESIGN

Cement	100 lbs
Fly Ash	300 lbs
Fine Aggr	2600 lbs
Water	70 gals

   No material shall be placed over the controlled density backfill for at least 8 hours after placement.

4. Material delivered to the site shall be inspected for dimensions and condition. The pipe shall be free from visible defects and not exhibit cracking or splitting. Pipe damaged by crushing or stretching shall not be used.

5. Minimum cover shall be 24 inches or as determined by the manufacturer's recommendations, whichever is greater. Any pipe damaged due to live load shall be replaced at the contractor's expense.

6. Use Corrugated Steel End Sections.

7. Notify Materials and Research at least 72 hours in advance of installing the pipe. Call 701-328-6915

Included in Pay Item
1) Pipe
2) Trench excavation
3) Disposal of unsuitable excavated material and placement of suitable excavated material on inslope.
4) Backfill of suitable excavated material
5) Aggregate Base Course Cl 3M or Cl 5
6) Control Density Fill
7) Corrugated Steel End Sections

Pay Items
1) Pipe Conduit

NORTH DAKOTA DEPARTMENT OF TRANSPORTATION

08/05/87

REVISIONS

DATE	CHANGE
06-21-00	Major revision
12-01-04	PE Stamp added
11-06-06	Major revisions
12-13-06	Add note 7