Installation Instructions

for the

SKT 350

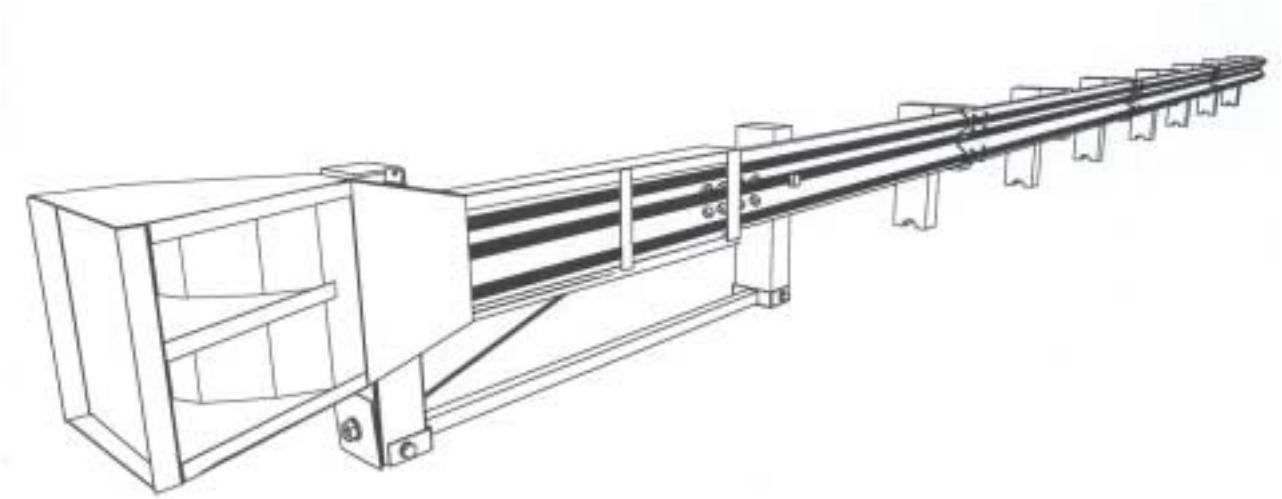

R O A D S Y S T E M S , I N C .

P. O. Box 2163

Big Spring, Texas 79721

Phone: (432) 263-2435 FAX: (432) 267-4039

Technical Support & Marketing Phone: (330) 346-0721

Technical Support & Marketing Fax: (330) 346-0722

This Installation Manual can be downloaded from RSI web site
www.roadsystems.com

ADDENDUM ..... March 2001

This SKT Installation Manual contains options for the allowable number of steel foundation tubes. See Table 1 on page 3.

Either 2-tube, 4-tube, or 8-tube options are acceptable and normally, the specifying agency will indicate which option will be used. When more than 2 foundation tubes are used, tubes 3 & 4 or tubes 3 through 8 must be the short tube 4'-6" long as shown in Figure 5 on page 11.

It is now permissible to eliminate the soil plates from the tubes used at posts 3 and higher provided it is approved by the specifying agency. The foundation tubes used at <u>posts 1 & 2 must use the soil plate if the 4'-6" long tube is used</u>.

If the 6'-0" long foundation tube (Figure 8, page 15) is used at posts 1 & 2, soil plates <u>are not required</u>.

Table of Contents

Page

LIST OF FIGURES ii

LIST OF TABLES iii

Installing the *SKT 350* 3

Materials 3
Design Options 3
Site Preparation 7
Tools Required 7
Installation Procedures 7
Installing Posts 3 through 8 7
Installing Posts 1 and 2 with Groundline Strut 13
Installing Guardrail 16
Installing Cable Anchor Bracket 16
Installing ***SKT 350*** Impact Head 18
Installing Cable Assembly 18
SKT 350 Installation Checklist 19

Repairing the *SKT 350* 20

Equipment Needed for Repair Operation 20
General Repair Procedures 20
Procedures Immediately Following an Accident (Temporary) 21

NOTE: The SKT 350 has different foundation tube options available. Where reference is made to a *5'-0" long foundation tube* with soil plate, a *4'-6" long foundation tube* with soil plate is an acceptable alternate.

See the inside cover for additional information on soil plate options.

PUBLICATION ~ 020105

List of Figures

Figure		Page
1	Isometric View of the ***SKT 350*** (Two Foundation Tube Option)	1
2	Plan & Elevation View of the ***SKT 350*** (Two Foundation Tube Option)	2
3	Optional Flared Installation	8
4	Section at CRT Post	10
5	Section at Posts with 5'-0" or 4'-6" Foundation Tubes with Soil Plates	11
6	Proper Placement of Foundation Tubes	12
7	Above-Ground Details at Post Locations 1 and 2	14
8	Section at Post Locations 1 and 2	15
9	Installation of Cable Anchor Bracket Shoulder Bolts	17
10	Installation of Cable Anchor Bracket	17
11	Chain Attachment to Remove Impact Head	22
12	Wood Post Pulling Tool (Pipe Option)	22
13	Wood Post Pulling Tool (Lag Screw Option)	22

List of Tables

Table Page

1 ***SKT 350*** Design Options 3

2 ***SKT 350*** Bill of Materials - Two Foundation Tube Option 4

3 ***SKT 350*** Bill of Materials - Four Foundation Tube Option 5

4 ***SKT 350*** Bill of Materials - Eight Foundation Tube Option 6

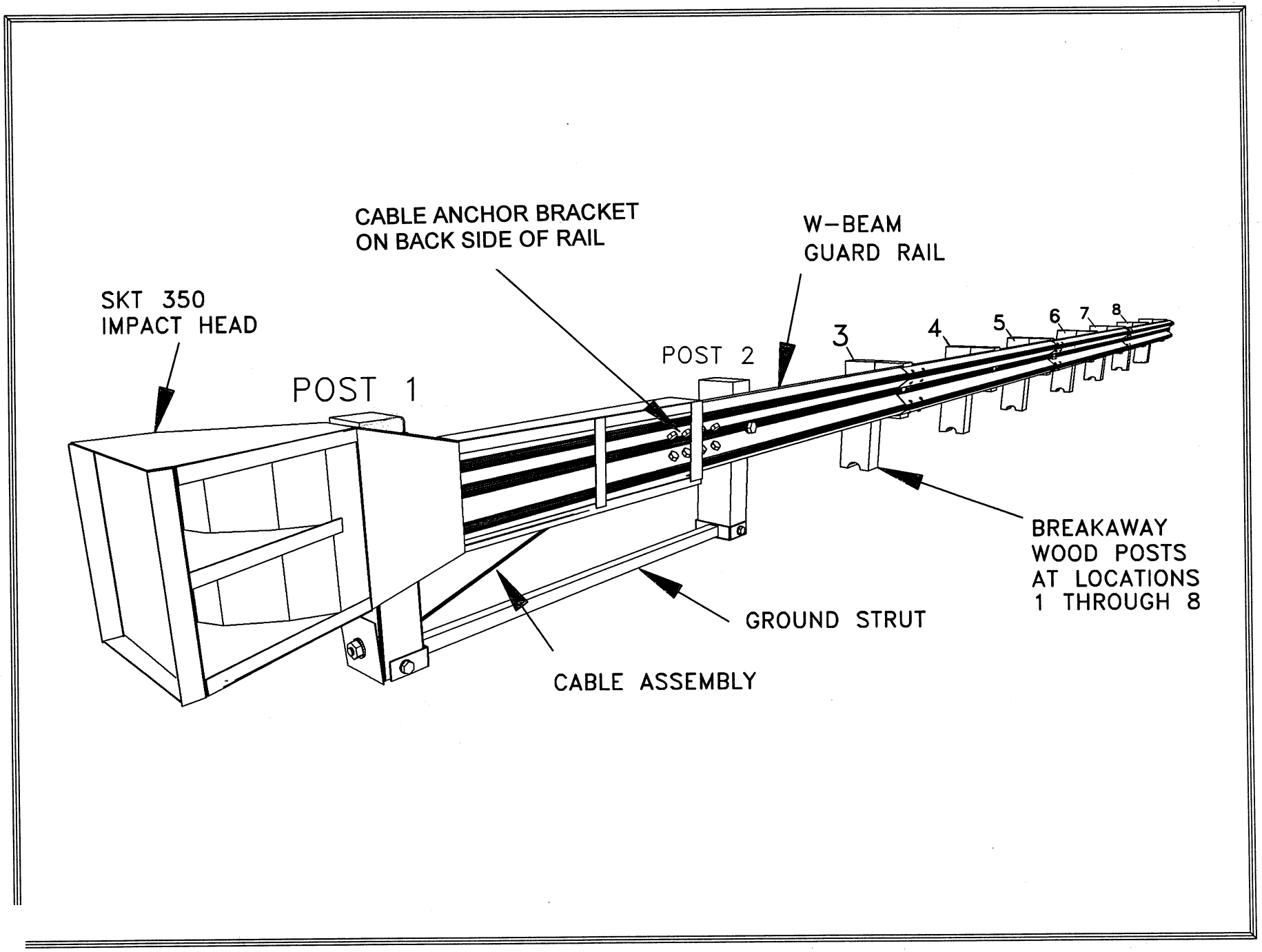

Figure 1. Isometric view of the *SKT 350.*

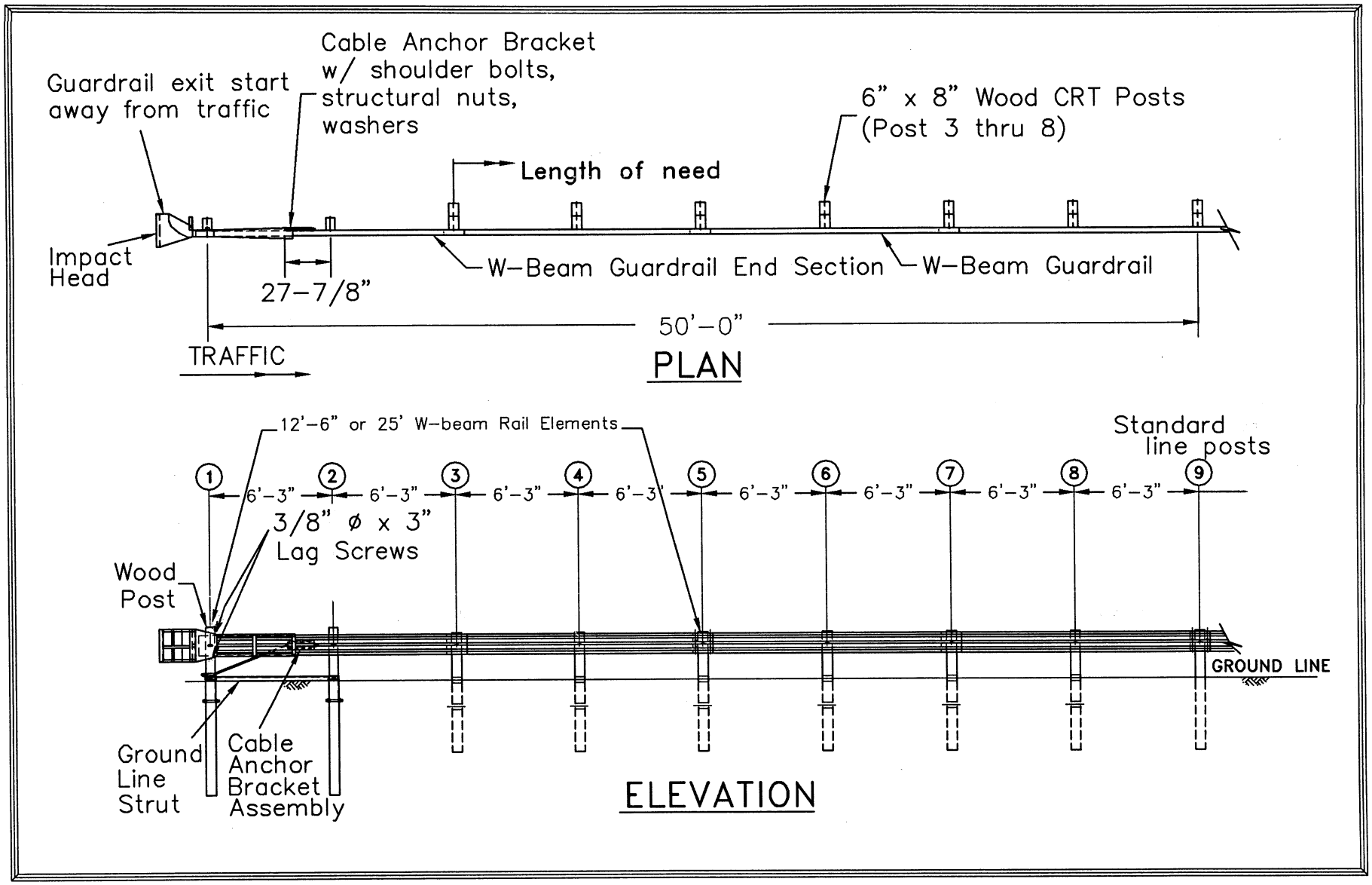

Figure 2. Plan and Elevation Views of *SKT 350.*
(<u>TWO</u> Foundation Tube Option)

Installing the *SKT 350*

Materials

As packaged, the ***SKT 350*** system includes all materials needed for a complete installation except for the impact face object marker. The length of the system in this configuration is 50'-0".

Design Options

Design options with 2, 4 or 8 foundation tubes are available as shown in **Table 1**. In addition for posts #1 and #2, the optional 6'-0" long split foundation tubes may be substituted with solid 6'-0" long foundation tubes without soil plates, standard 5'-0" or 4'-6" long foundation tubes with soil plates.

Table 1. *SKT 350* Design Options

***SKT 350* Design Options**	*No. of Optional 6'-0" Split Foundation Tubes with No Soil Plate	No. of Standard Foundation Tubes with a Soil Plate	No. of CRT Posts	Total No. of Posts
2 Foundation Tubes	2	0	6	8
4 Foundation Tubes	2	2	4	8
8 Foundation Tubes	2	6	0	8

***Note.** The optional 6'-0" long split foundation tubes may be substituted with solid 6'-0" long foundation tubes without soil plates, standard 5'-0" or 4'-6" long foundation tubes with soil plates.

Figure 1 shows the isometric view and **Figure 2** shows the plan and elevation views of the ***SKT 350*** for the TWO foundation tube option.

The bills of materials for the three design options are shown in **Tables 2 through 4**, respectively.

Table 2. *SKT 350* Bill of Materials - TWO Foundation Tube Option

Code #	Quantity	Description
S3000	1	Impact Head
S1303/S1305	1	W-Beam Guardrail End Section, 12 Ga., 12-6" or 25'-0"
G1203/G1205	3/1	W-Beam Guardrail, 12 Ga., 12'-6" or 25'-0"
S730	2	* Foundation Soil Tubes, 6" x 8" x 6'-0" **(SEE NOTE BELOW)**
E740	1	Pipe Sleeve - 2″ Standard Pipe x 5-1/2″
E750	1	Bearing Plate - 8″ x 8″ x 5/8″
S760	1	Cable Anchor Bracket
E770	1	BCT Cable Anchor Assembly
E780	1	Ground Strut
P650	2	5-1/2″ x 7-1/2″ x 45″ Wood Posts
P671	6	6" x 8" x 6'-0" Wood CRT Posts
P675	6	6" x 8" x 14" Timber Blockouts
E3151	1	Impact Face Object Marker (Not Provided)
Hardware	* The optional **6'-0" long split** foundation tubes may be substituted with either **solid 6'-0" long** foundation tubes without soil plates, standard **5'-0" long** or **4'-6" long** foundation tubes with soil plates.	
B580122	16/32	5/8″ x 1¼″ Splice Bolts
B580754	2	5/8″ x 7½″ Hex Bolts
B581004	2	5/8″ x 10″ Hex Bolts
B581002	1	5/8″ x 10″ H.G.R. Post Bolt (Post 2 Only / NO BOLT USED AT POST #1)
B581802	6	5/8″ x 18" H.G.R. Post Bolts (Posts 3 through 8)
N050	27/43	5/8″ H.G.R. Nuts (Splice - 16/32, Soil Tubes - 4, Posts 2 to 8 - 7)
W050	11	5/8″ Flat Washers (2 each at Soil Tubes + 7 Posts)
N100	2	1″ Anchor Cable Hex Nuts
W100	2	1″ Anchor Cable Washers
E350	2	3/8″ x 3″ Lag Screws
SB58A	8	Cable Anchor Bracket Shoulder Bolts
N055A	8	1/2" A325 Structural Nuts
W050A	16	1-1/16" OD x 9/16" ID A325 Structural Washers

Table 3. *SKT 350* Bill of Materials - FOUR Foundation Tube Option

Code #	Quantity	Description
S3000	1	Impact Head
S1303/S1305	1	W-Beam Guardrail End Section, 12 Ga., 12'-6" or 25'-0"
G1203/G1205	3/1	W-Beam Guardrail, 12 Ga., 12'-6" or 25'-0"
S730	2	* Foundation Soil Tubes, 6" x 8" x 6'-0" **(SEE NOTE BELOW)**
S735	2	Foundation Soil Tubes, 6" x 8" x 5'-0" **(SEE NOTE BELOW)**
SP600	2	Soil Plates - 24" x 18" x 1/4" **(SEE NOTE BELOW)**
E740	1	Pipe Sleeve - 2″ Standard Pipe x 5-1/2″
E750	1	Bearing Plate - 8″ x 8″ x 5/8″
S760	1	Cable Anchor Bracket
E770	1	BCT Cable Anchor Assembly
E780	1	Ground Strut
P650	4	5-1/2″ x 7-1/2″ x 45″ Wood Posts
P671	4	6" x 8" x 6'-0" Wood CRT Posts
P675	6	6" x 8" x 14" Timber Blockouts
E3151	1	Impact Face Object Marker (Not Provided)
Hardware	* The optional **6'-0" long split** foundation tubes may be substituted with either **solid 6'-0" long** foundation tubes without soil plates, standard **5'-0" long** or **4'-6" long** foundation tubes with soil plates	
B580122	16/32	5/8″ x 1¼″ Splice Bolts
B580754	6	5/8″ x 7½″ Hex Bolts
B581004	4	5/8″ x 10″ Hex Bolts
B581002	1	5/8″ x 10″ H.G.R. Post Bolt (Post 2 Only / NO BOLT USED AT POST #1)
B581802	6	5/8″ x 18" H.G.R. Post Bolts (Posts 3 through 8)
N050	33/49	5/8″ H.G.R. Nuts (Splice - 16/32, Soil Tubes - 10, Posts 2 to 8 - 7)
W050	15	5/8″ Flat Washers (2 each at Soil Tubes + 7 Posts)
N100	2	1″ Anchor Cable Hex Nuts
W100	2	1″ Anchor Cable Washers
E350	2	3/8″ x 3″ Lag Screws
SB58A	8	Cable Anchor Bracket Shoulder Bolts
N055A	8	½" A325 Structural Nuts
W050A	16	1-1/16" OD x 9/16" ID A325 Structural Washers

Table 4. *SKT 350* Bill of Materials - EIGHT Foundation Tube Option

Code #	Quantity	Description
S3000	1	Impact Head
S1303/S1305	1	W-Beam Guardrail End Section, 12 Ga., 12'-6" or 25'-0"
G1203/G1205	3/1	W-Beam Guardrail, 12 Ga., 12'-6" or 25'-0"
S730	2	* Foundation Soil Tubes, 6" x 8" x 6'-0" **(SEE NOTE BELOW)**
S735	6	Foundation Soil Tubes, 6" x 8" x 5'-0" **(SEE NOTE BELOW)**
SP600	6	Soil Plates - 24" x 18" x 1/4" **(SEE NOTE BELOW)**
E740	1	Pipe Sleeve - 2″ Standard Pipe x 5-1/2″
E750	1	Bearing Plate - 8″ x 8″ x 5/8"
S760	1	Cable Anchor Bracket
E770	1	BCT Cable Anchor Assembly
E780	1	Ground Strut
P650	8	5-1/2″ x 7-1/2″ x 45″ Wood Posts
P675	6	6" x 8" x 14" Timber Blockouts
E3151	1	Impact Face Object Marker (Not Provided)
Hardware	* The optional **6'-0" long split** foundation tubes may be substituted with either **solid 6'-0" long** foundation tubes without soil plates, standard **5'-0" long** or **4'-6" long** foundation tubes with soil plates.	
B580122	16/32	5/8″ x 1¼″ Splice Bolts
B580754	14	5/8″ x 7½″ Hex Bolts
B581004	8	5/8″ x 10″ Hex Bolts
B581002	1	5/8″ x 10″ H.G.R. Post Bolt (Post 2 Only / NO BOLT USED AT POST #1)
B581802	6	5/8″ x 18" H.G.R. Post Bolts (Posts 3 through 8)
N050	45/61	5/8″ H.G.R. Nuts (Splice - 16/32, Soil Tubes - 22, Posts 2 to 8 - 7)
W050	23	5/8″ Flat Washers (2 each at Soil Tubes + 7 Posts)
N100	2	1″ Anchor Cable Hex Nuts
W100	2	1″ Anchor Cable Washers
E350	2	3/8″ x 3″ Lag Screws
SB58A	8	Cable Anchor Bracket Shoulder Bolts
N055A	8	½" A325 Structural Nuts
W050A	16	1-1/16" OD x 9/16" ID A325 Structural Washers

Site Preparation

When the guardrail is installed parallel to the edge of the shoulder, a 50:1 flare away from the roadway is recommended so the impact head will not encroach on the shoulder. However, the flare is not required and may be decreased or eliminated for specific applications. When necessary, a 25:1 flare rate can be used over a distance of 25'-0" or 50'-0", as shown in **Figure 3**. Minor site grading may be necessary for installations placed beyond the edge of the shoulder to prevent the foundation tubes from extending more than 4″ above the ground (see Section on Installation).

Tools Required

The tools required for installation of the ***SKT 350*** system are those used to install standard highway guardrails (H.G.R.), including: 9/16", 7/8", 15/16", 1-1/4", and 1-1/2" sockets and wrenches, a drill with a 1/4″ bit, and other equipment such as augers, tampers, and post pounders commonly used in driving posts.

Installation Procedures

Begin installation at the downstream end of the ***SKT 350*** (post location 9) to ensure that the terminal matches up with the standard section of guardrail. The major steps in the installation of the ***SKT 350*** are as follows:

- Install posts 3 through 8,
- Install posts 1 and 2 with groundline strut,
- Install guardrail,
- Install cable anchor bracket,
- Install the ***SKT 350*** impact head, and
- Install cable assembly.

NOTE: Foundation tubes must be used at **Posts #1 and #2**. Those tubes may be either 6'-0" long split tubes (S730) without soil plates, 6'-0" long solid tubes (E731) without soil plates, 5'-0" long tubes (S735) with soil plates (SP600), or 4'-6" long tubes (E735) with soil plates (SP600). **Posts # 3 through 8** may be either CRT wood posts without foundation tubes or short wood posts inside a 5'-0" or 4'-6" long foundation tube with soil plates.

Installing Posts 3 Through 8

For the **two foundation tube option**, posts 3 through 8 are 6" x 8" x 6'-0" CRT posts (P671). When installed properly, the hole at the ground line of these CRT posts will be parallel to the roadway.

For the **four foundation tube option**, posts 3 and 4 are inserted in foundation tubes with soil plates (SP600). Install the 5-1/2″ x 7-1/2″ x 45" wood posts (P650) in the foundation tubes at the post 3 and 4 locations. Secure the post to each foundation tube with a 5/8″ x 10″ hex head bolt (B581004) and H.G.R. nut (N050) with a washer (W050) under both the bolt head and the nut. *Do not over tighten and deform the tubes.* Posts 5 through 8 are 6" x 8" x 6'-0" CRT posts (P671).

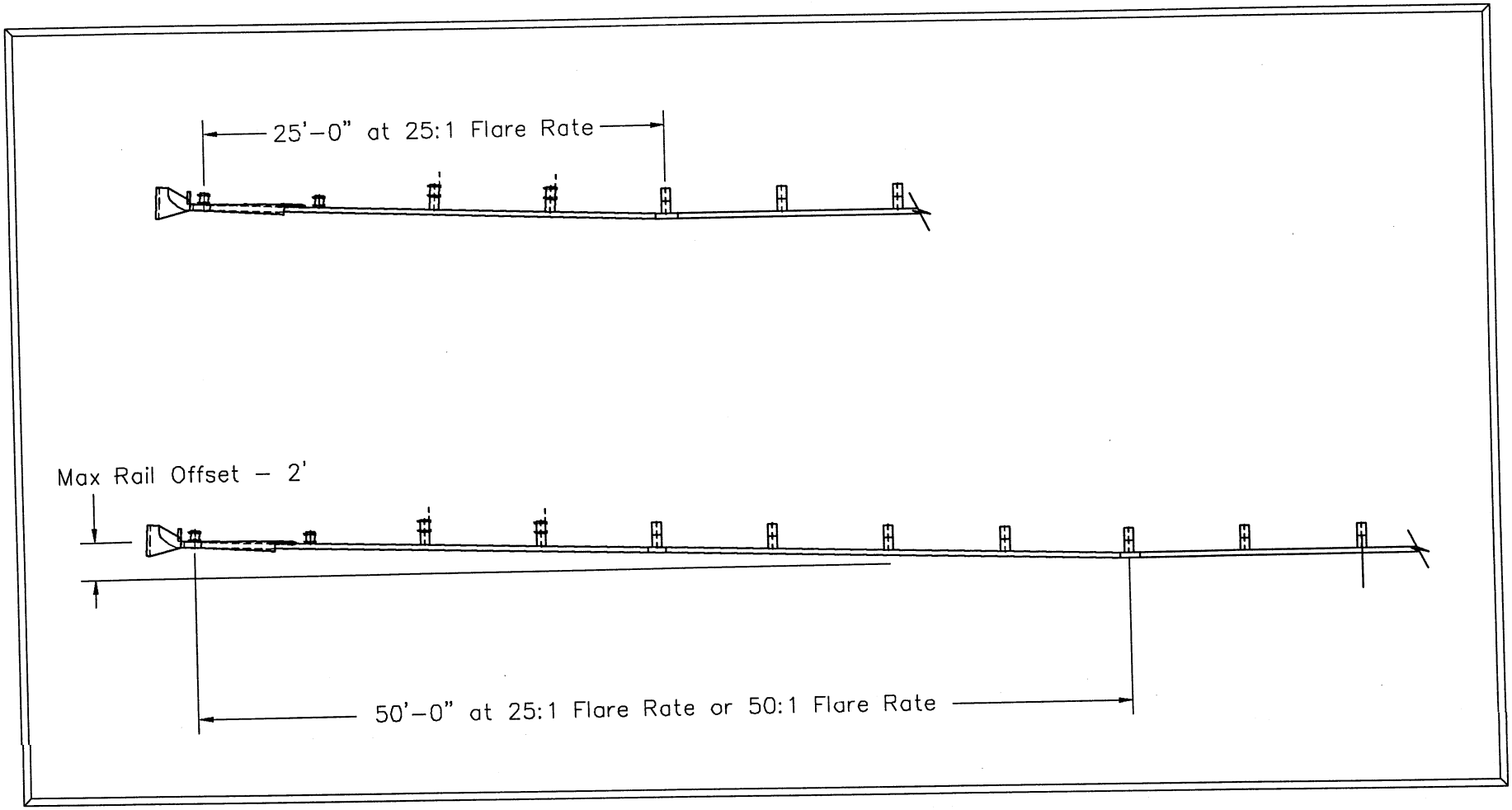

Figure 3. Optional Flared Installation

For the **eight foundation tube option**, posts 3 through 8 are inserted in foundation tubes with soil plates (SP600). Install the 5-1/2″ x 7-1/2″ x 45" wood posts (P650) in the foundation tubes at the post 3 through 8 locations. Secure the post to each foundation tube with a 5/8″ x 10″ hex head bolt (B581004) and H.G.R. nut (N050) with a washer (W050) under both the bolt head and the nut. *Do not over tighten and deform the tube.* There are no CRT posts for this option.

Figure 4 shows the section of a CRT post. The CRT post may be driven with an approved driving head. For stiff soils, drill a 6″ pilot hole and force the post to the appropriate depth by impact or vibratory means with an approved driving head. The post may also be installed by augering and backfilling if the contractor so prefers. The initial hole must be large enough to allow adequate room for proper compaction of the soil during backfill. *Care must be taken to carefully compact the backfill to prevent settlement or lateral displacement of the post.*

Figure 5 shows the section of a post in a standard 5'-0" or 4'-6" long foundation tube with a soil plate. Fasten the soil plate to the foundation tube with two 5/8″ x 7-1/2″ hex head bolts (B580754) and H.G.R. nuts (N050) through the bottom holes of the foundation tubes. *Do not over tighten and deform the tubes.* These bolts attach the soil plate to the foundation tube and stop the post from sliding all the way into the tube during installation.

Do not drive the foundation tube with wood post inserted. If the soil is penetrable so that the foundation tube does not deform, the foundation tube may be driven with an approved driving head. For non-penetrable soil, drill a 6″ pilot hole and force the tube to the appropriate depth by impact or vibratory means with an approved driving head. The tube may also be installed by augering and backfilling if the contractor so prefers. The initial hole must be large enough to allow adequate room for proper compaction of the soil during backfill. *Care must be taken to carefully compact the backfill to prevent settlement or lateral displacement of the foundation tubes.*

If rock is encountered during driving or excavation, refer to appropriate State specifications. Guidelines will vary from State to State.

Figure 6 illustrates the proper placement of the foundation tubes. The top of the foundation tubes should not project more than 4″ above the ground line when measured along a 5' cord, according to AASHTO specifications. Site grading may be required if the top of the foundation tubes project more than 4″ above the ground line. The finished guardrail height should generally be 27-3/4″ above the edge of the shoulder.

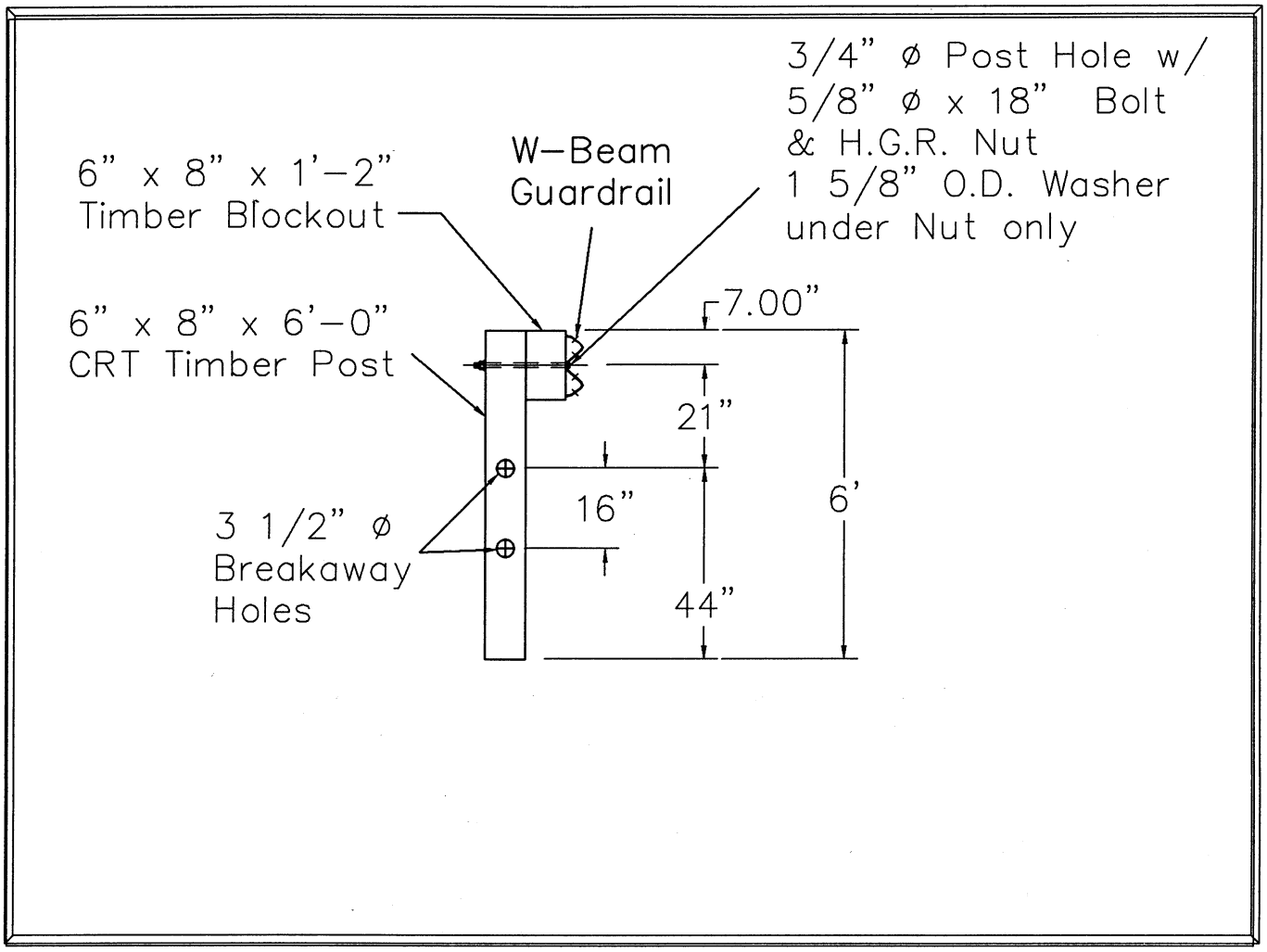

SKT 350 DESIGN OPTION	LOCATION OF CRT POSTS
(2) FOUNDATION TUBES	POSTS 3 THROUGH 8
(4) FOUNDATION TUBES	POSTS 5 THROUGH 8

Figure 4. Section at CRT Post

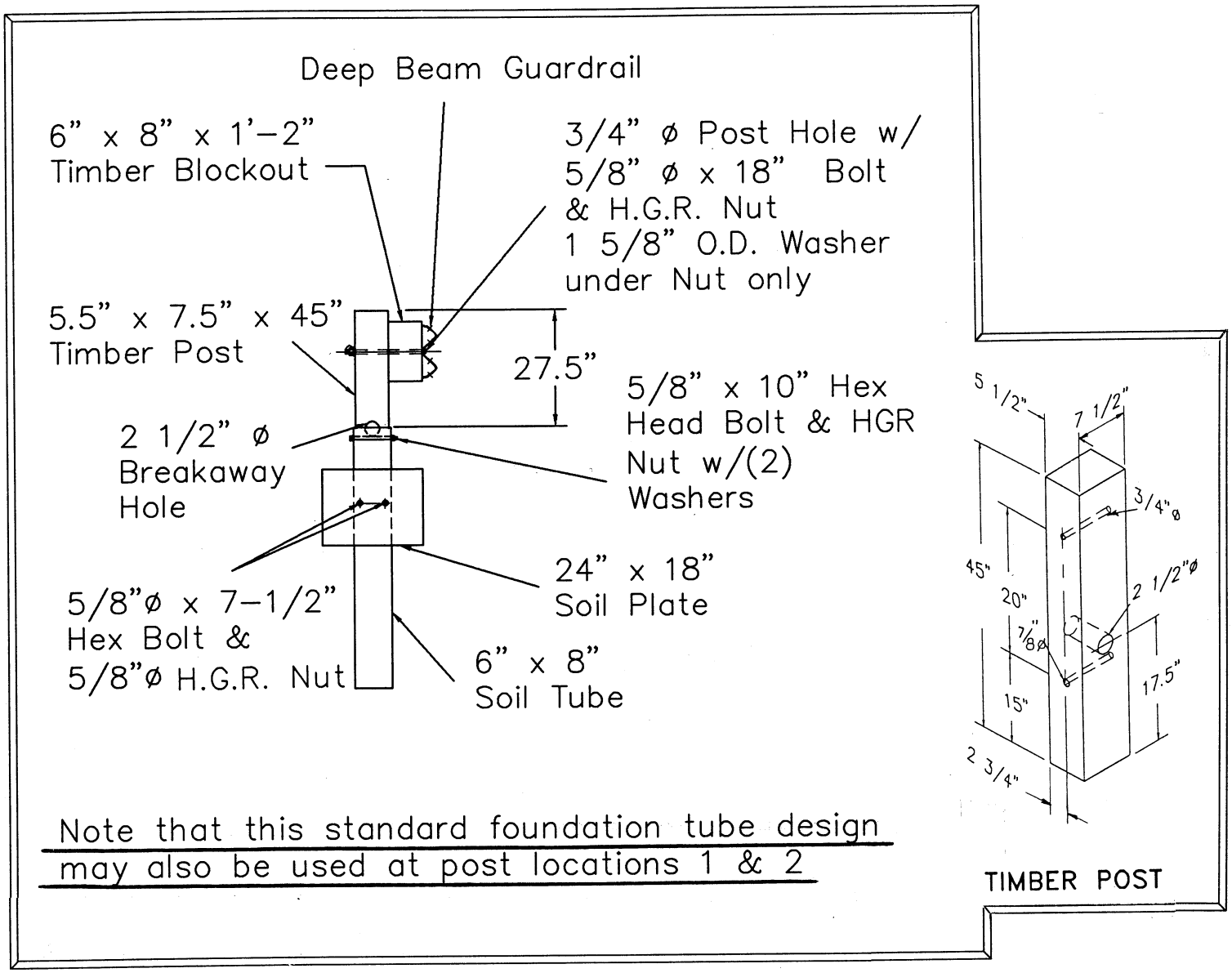

SKT 350 DESIGN OPTION	LOCATION OF STANDARD FOUNDATION TUBES WITH SOIL PLATES
(4) FOUNDATION TUBES	POSTS 1 THROUGH 4 **OR** POSTS 3 AND 4
(8) FOUNDATION TUBES	POSTS 1 THROUGH 8 **OR** POSTS 3 THROUGH 8

Figure 5. Section at Posts with 5'-0" or 4'-6" Foundation Tubes with Soil Plates

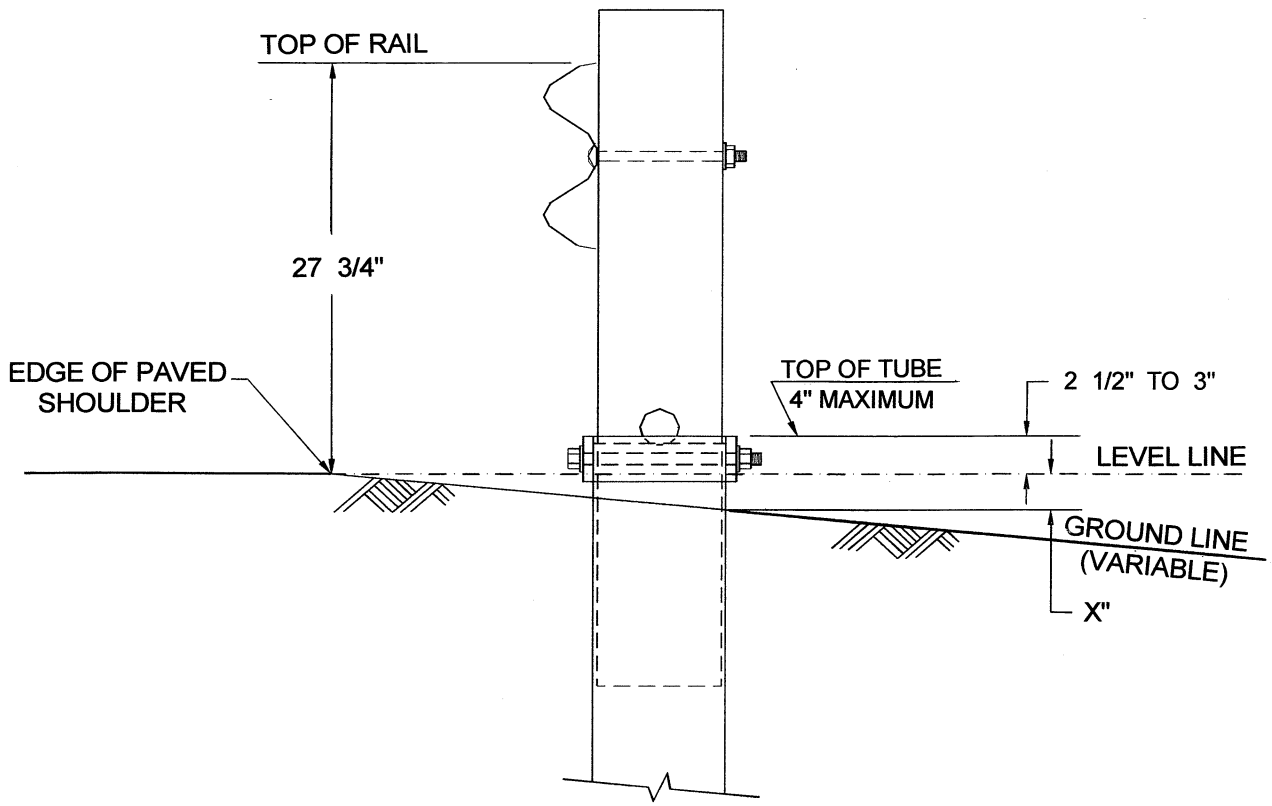

Figure 6. Proper Placement of Foundation Tubes

Based on a level line from the edge of the paved shoulder, the top of the foundation tube should normally be 2-1/2" to 3" above the level line. The placement of the foundation tube should be an appropriate depth below the level line in order to maintain the 27-3/4" guardrail height from the edge of the shoulder.

If the slope drops off some distance (*X*") from the edge of the shoulder to the tube location, as shown in **Figure 6**, the depth of the foundation tube should be reduced by *X*" in order to maintain the proper guardrail height. The top of the foundation tube will project (*X*" + 2-1/2") to (*X*" + 3") above the ground. In order not to exceed the AASHTO 4" maximum projection above the ground, site grading will be necessary to assure that the "*X*" dimension would not be more than 1-1/2" to 1" respectively.

Installing Posts 1 and 2 with Groundline Strut

Figure 7 shows the above ground details and **Figure 8** shows the section at post locations 1 and 2. Posts 1 and 2 may be installed with either 6'-0" long split foundation tubes (S730) without soil plates, solid 6'-0" long foundation tubes (E731) without soil plates, standard 5'-0" long foundation tubes (S735) with soil plates (SP600) or standard 4'-6" long foundation tubes (E735) with soil plates (SP600).

For the **6'-0" long split foundation tube**, fasten one 5/8" x 7-1/2" hex head bolt (B580754) and H.G.R. nut (N050) through the bottom hole of the foundation tube. *Do not over tighten and deform the tube*. The bolt is intended to stop the post from sliding all the way into the tube during installation.

Do not drive the foundation tube with wood post inserted. If the soil is penetrable so that the foundation tube does not deform, the foundation tube may be driven with an approved driving head. For non-penetrable soil, drill a 6" pilot hole and force the tube to the appropriate depth by impact or vibratory means with an approved driving head. The tube may also be installed by augering and backfilling if the contractor so prefers. The initial hole must be large enough to allow adequate room for proper compaction of the soil during backfill. *Care must be taken to carefully compact the backfill to prevent settlement or lateral displacement of the foundation tubes.*

If rock is encountered during driving or excavation, refer to appropriate State specifications. Guidelines will vary from State to State.

The top of the foundation tubes should not project more than 4" above the ground line when measured along a 5' cord, according to AASHTO specifications. Site grading may be required if the top of the foundation tubes project more than 4" above the ground line. The finished guardrail height should generally be 27-3/4" above the edge of the shoulder (see **Figure 6**).

The installation procedure for the **solid 6'-0" long foundation tubes without soil plates** is the same as that for the split foundation tubes. The installation procedure for the **standard 5'-0" long foundation tubes with soil plates** or the **4'-6" long foundation tubes with soil plates** is described previously under the Section on "Installing Posts 3 through 8" and will not be repeated here.

Insert the pipe sleeve (E740) into the 2-1/2" diameter hole near the base of the 5-1/2" x 7-1/2" x 45" wood post (P650) and install the post in the foundation tube at post location 1. Install the second 5-1/2" x 7-1/2" x 45" wood post in the foundation tube at post location 2, and fit the groundline strut (E780) between the two posts. Secure the post to each foundation tube with a 5/8" x 10" hex head bolt (B581004) and H.G.R. nut (N050) with a washer (W050) under both the bolt head and the nut. These bolts will serve to secure the posts and attach the groundline strut to the foundation tubes, as shown in **Figure 8**.

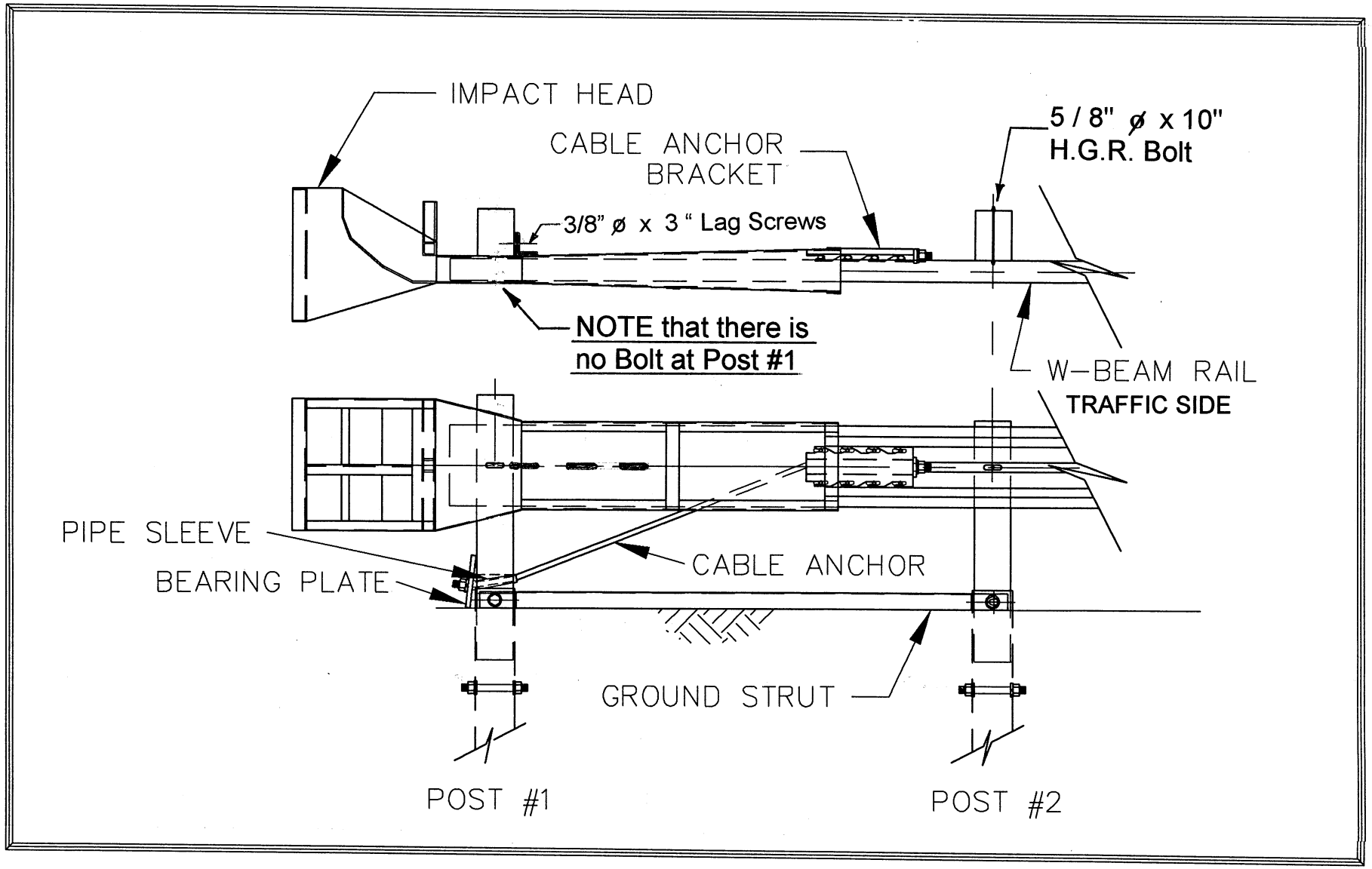

Figure 7. Above-Ground Details at Post Locations 1 and 2.

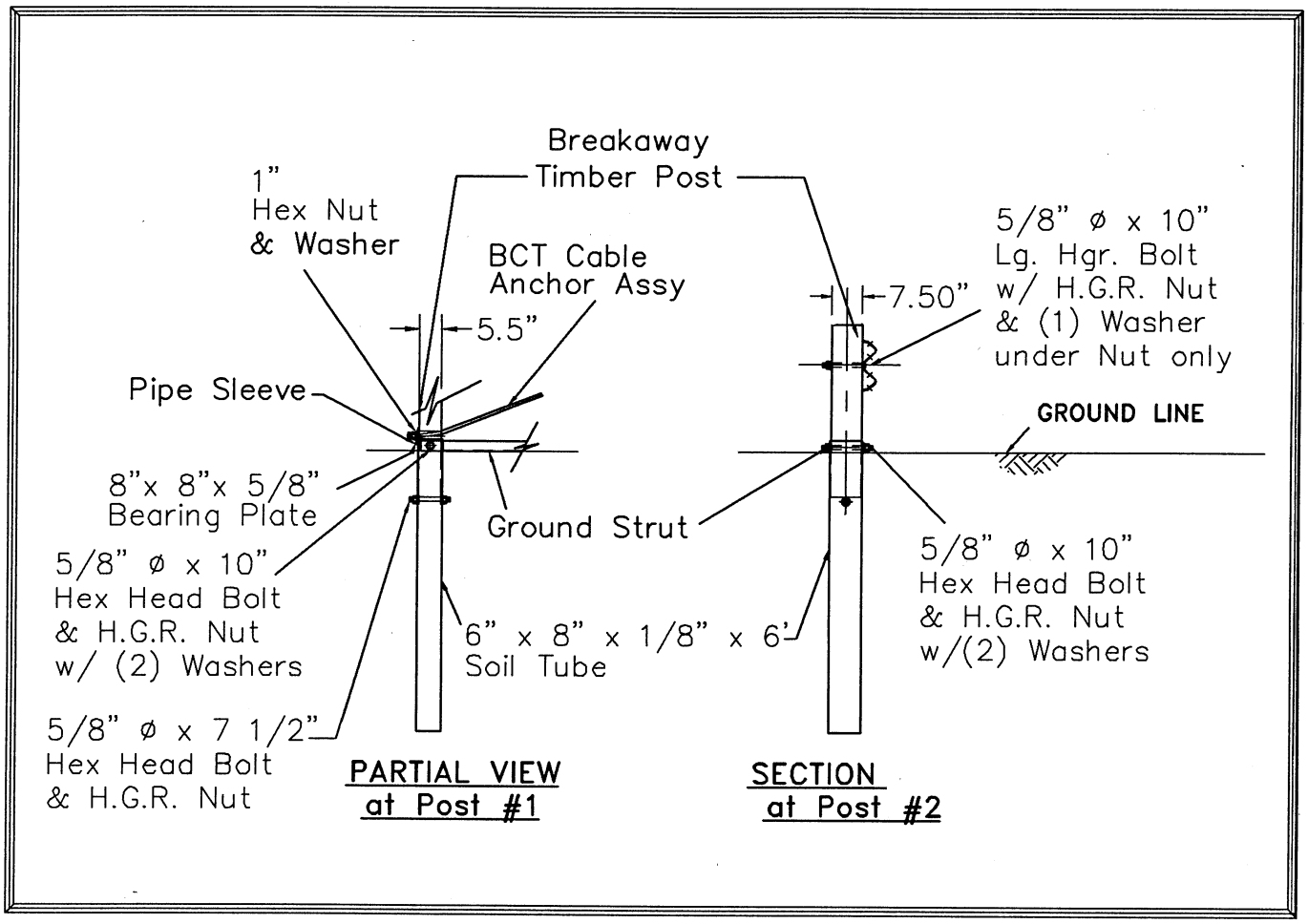

Note. The optional **6'-0" long split foundation tubes** may be substituted with either **solid 6'-0" long foundation tubes** without soil plates, standard **5'-0" long or 4'-6" long foundation tubes** with soil plates.

Figure 8. Section at Post Locations 1 and 2.

Installing Guardrail

Attach the standard W-beam guardrail sections, 12'-6" (G1203) or 25'-0" (G1205), beginning at post 9. Attach the W-beam guardrail end section to span from post 1 to 3 for the 12'-6" rail (S1303), or from post 1 to 5 for the 25'-0" rail (S1305). The rail is to be spliced with 5/8″ x 1-1/4″ H.G.R. bolts (B580122) and 5/8″ H.G.R. nuts (N050).

For ease of installation, it is recommended to have the eight 1/2" cable anchor bracket shoulder bolts (SB58A) and the cable anchor bracket (S760) attached to the W-beam guardrail end section prior to attaching the guardrail to the posts. See Section on “Installing Cable Anchor Bracket” for details.

The rails are to be attached to posts and blockouts at post locations 3 through 8 with 5/8″ x 18" H.G.R. bolts (B581802) and nuts (N050). There is no blockout on posts 1 and 2. The rail is attached to post 2 only with a 5/8″ x 10″ H.G.R. bolt (B581002). **Note that no bolt is used at post #1**. Be sure to place a 5/8″ flat washer (W050) on the backside of posts 2 through 8 under each nut (N050).

It is recommended that the post bolt be placed through the rail at post location #5 where the rail splice occurs but it is not necessary.

NOTE: After the blockout is attached, drive a galvanized steel 10d common nail through the block and into the post (toe nailed) to prevent rotation if the wood shrinks.

Installing Cable Anchor Bracket

For ease of installation, it is recommended to have the eight 1/2" cable anchor bracket shoulder bolts (SB58A) and the cable anchor bracket (S760) attached to the W-beam guardrail end section prior to attaching the guardrail to the posts. If this procedure is not followed, Post #2 may interfere with attaching the bracket.

The eight 1/2" cable anchor bracket shoulder bolts (SB58A) are attached to the W-beam guardrail end section with two 1-1/16" OD x 9/16" ID structural washers (W050A), one on each side of the guardrail, and a 1/2" structural nut (N055A). The shoulders of the bolts should be on the backside of the guardrail, away from traffic, as shown in **Figure 9**.

For ease of installation, attach the cable anchor bracket shoulder bolts to the rail "finger tight" only. Then align the slots on the cable anchor bracket (S760) with the shoulder bolts and tap the cable anchor bracket onto the shoulder portion of the bolts using a hammer. Tighten the bolts with a wrench when the bracket is in place. When installed properly, the welded plate on the cable anchor bracket should be toward Post #2, as shown in **Figure 10**.

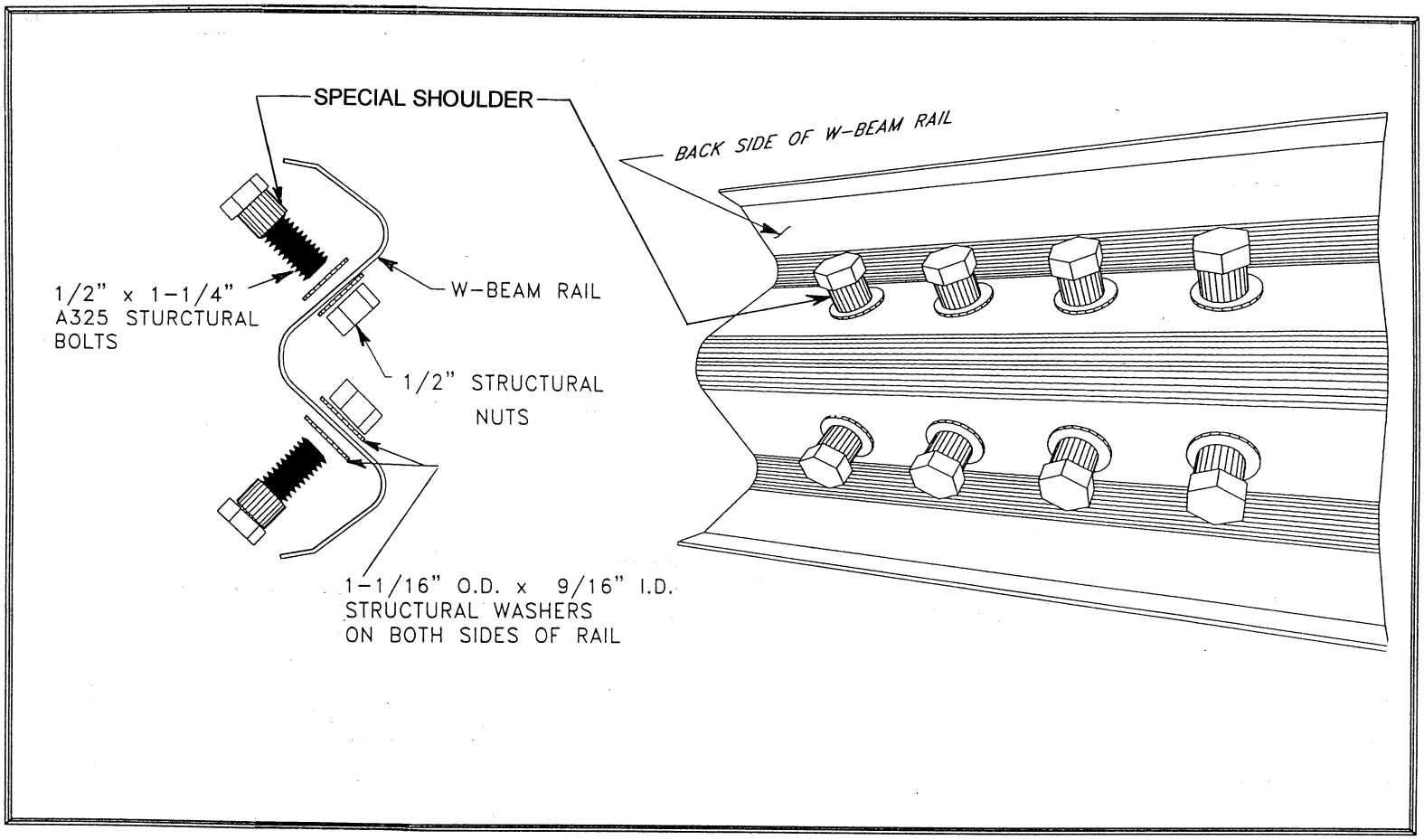

Figure 9. Installation of Cable Anchor Bracket Shoulder Bolts.

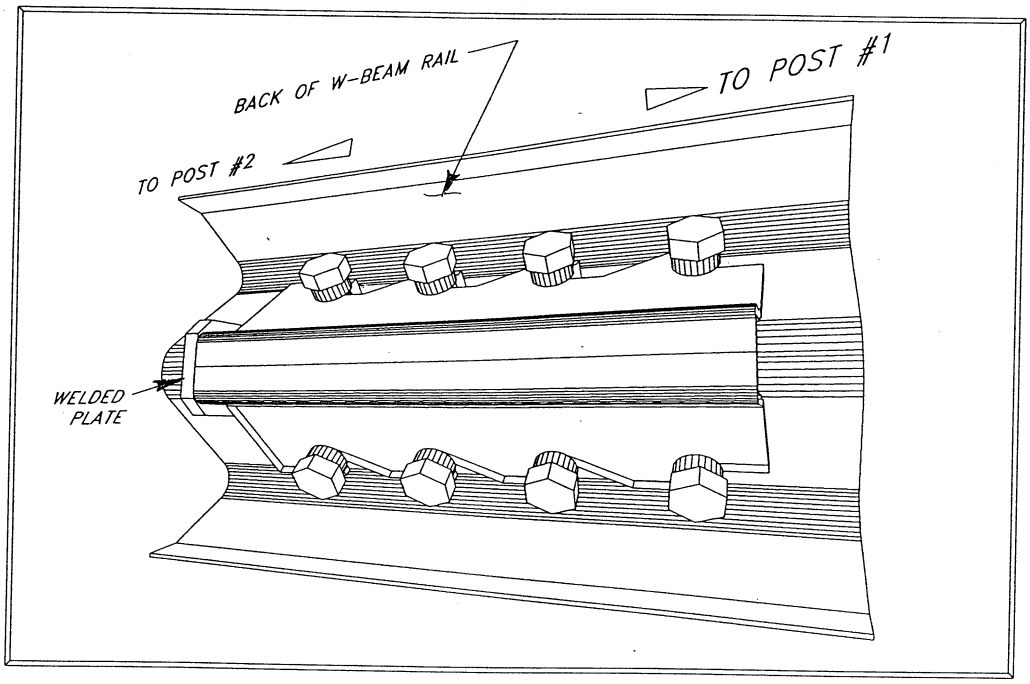

Figure 10. Installation of Cable Anchor Bracket.

Installing the SKT 350 Impact Head

The eight cable anchor bracket shoulder bolts and the cable anchor bracket should be attached to the W-beam guardrail end section prior to attaching the ***SKT 350*** impact head to the first post with lag screws.

Place the impact head (S3000) with the guide chute over the end of the W-beam guardrail. The impact head should be positioned so that the protruding tube is on the backside of the guardrail, away from traffic as shown in **Figure 2** and **Figure 7**. Slide the impact head forward until the post angle attachments on the impact head are aligned with the downstream side of the first post. This is the side facing post #2. Attach the impact head to the first post with two 3/8″ x 3″ lag screws (E350), one each for the top and bottom post angle attachments. A 1/4″ pilot hole is required to avoid breaking the lag screw. Note that an earlier design of the ***SKT 350*** impact head had the attachment to post #1 with the post angle attachments of the impact head centered on the first post. This design is still acceptable.

Note. It is recommended that the face of the impact head be delineated with an object marker that meets State specifications for better night visibility. However, the impact face object marker is not included as part of the shipped materials for the ***SKT 350*** unless specifically requested in the contract plans.

Installing Cable Assembly

Place the cable assembly (E770) through the cable anchor bracket and through the sleeve of post 1. Place the bearing plate (E750) at the base of post 1 with 5″ dimension up and 3″ dimension down. Place a nail over the bearing plate to prevent the plate from rotating. Secure both ends of the cable assembly with a 1″ hex nut (N100) and washer (W100). While tightening cable, use a 2-lb hammer to tap the cable anchor bracket from the downstream end to ensure that it is securely interlocked with the bolts. Restrain the cable at the end being tightened to avoid twisting the cable.

Upon completion of the installation, the cable should be taut and the cable anchor bracket should be fully seated on the shoulder portion of the cable anchor bolts. *It is very important that the cable anchor bracket be fully seated on the shoulder portion of the cable anchor bolts.*

SKT 350 Installation Checklist

State:_____

Date:_____

Project #:_____

Location:_____

- ☐ The rail height is in accordance with the plans (generally 27-3/4″ above the edge of the shoulder).
- ☐ The rail is not attached to the post at post location #1.
- ☐ The foundation tubes do not protrude more than 4″ above the ground line (measured by the AASHTO 5' cord method). Site grading may be necessary to meet this requirement.
- ☐ The bolts at the top of the foundation tubes are not over-tightened, deforming the walls of the tubes.
- ☐ The guide chute of the impact head is parallel to the top of the rail and the impact head does not encroach on the shoulder (a 50:1 taper is permitted to eliminate the potential for encroachment).
- ☐ The two lag screws holding the impact head to post 1 are snug.
- ☐ The 8″ x 8″ bearing plate at post 1 is correctly positioned with the 5" dimension up & the 3" dimension down. The anchor cable is taut and correctly installed. A nail has been placed over the bearing plate to prevent rotation.
- ☐ The cable anchor bracket shoulder bolts are properly attached to the W-beam guardrail and the cable anchor bracket is fully seated on the shoulder portion of the bolts.
- ☐ Posts installed in foundation tubes have the 2-1/2″ breakaway hole located parallel to the roadway with the bottom of the hole at the top of the tube.
- ☐ CRT posts have two 3-1/2″ breakaway holes (checked prior to installation) located parallel to the roadway with the center of the top hole located at the ground line.
- ☐ If the posts were augered, be sure the backfill material around the posts is compacted.
- ☐ No washers are used on the face of the rail except at the cable anchor bracket bolts.

Additional notes: _____

_____

Inspection performed by: _____

Repairing the *SKT 350*

Equipment Needed for Repair Operation

- Acetylene torch to cut off the damaged rail,
- Heavy duty chain to remove the impact head is sometimes required (see **Figure 11**),
- S.A.E. wrench or socket sizes 9/16", 7/8", 15/16", 1-1/4", and 1-1/2",
- Vice grip or channel lock pliers,
- Sledge hammer,
- Post remover tool (see **Figures 12 and 13**),
- Other normal guardrail tools.

General Repair Procedures

After an end-on impact occurs with the ***SKT 350***, it will normally require replacement of the first 12′-6″ or 25'-0" end section of rail and any other damaged rail section(s) and any broken post(s). For a traffic face impact, the damage will be to the downstream rail section(s) and associated posts.

The general step-by-step procedure for repairing a damaged ***SKT 350*** terminal is as follows:

(1) Check the impact head for damage.

(2) Check the cable anchor bracket and cable assembly for damage. The bearing plate, nuts, washers, cable anchor bracket, and the special cable anchor bracket shoulder bolts are rarely damaged.

(3) Check the number of broken posts and wood blockouts that need to be replaced, along with any damaged bolts. Inventory and pick up the reusable parts.

(4) Torch off the kinked rail near the outlet of the impact head. The impact head should be able to be **removed by hand** at this point. If not, then hook up a chain attachment through the opening behind the impact plate of the impact head, as shown in **Figure 11**. Pull the impact head off the rail with the chain attached to a truck frame with the W-beam guardrail still attached to the downstream guardrail posts.

(5) Disconnect and remove the damaged rail from the posts.

(6) Remove the broken posts from the foundation tubes using one of the two post removal tools (see **Figures 12 and 13**) assembled from "off the shelf hardware" items. Pound the steel pipe or screw the lag screw into the top of the broken post stub and remove the remains of the broken post by pulling on the chain. Use a pry bar as a lever if necessary.

(7) Reinstall the system following the procedures listed in this manual.

Procedures Immediately Following an Accident (Temporary)

If no repair parts are readily available immediately following an accident, the following procedure should be used to provide temporary protection of the guardrail end. It should be noted that this repair is only for temporary purposes, and the anchor cable cannot be installed to provide tension in the rail for redirectional impacts.

(1) Remove damaged rail and impact head from the roadway or shoulder area.

(2) Using an acetylene torch, cut the kinked rail off at the outlet of the impact head and inspect the head for any damage.

(3) Remove the impact head by hand. If this is not possible, then with a chain hook-up (see **Figure 11**), pull the impact head off the downstream rail that is still attached to the posts.

(4) Locate the first post downstream of any damaged rail and cut this rail off about 9″ in front of the post. If the post is at a splice, simply unbolt the damaged rail.

(5) Install the impact head on the rail and attach it to the post with lag bolts.

(6) Warning signs should be used where appropriate.

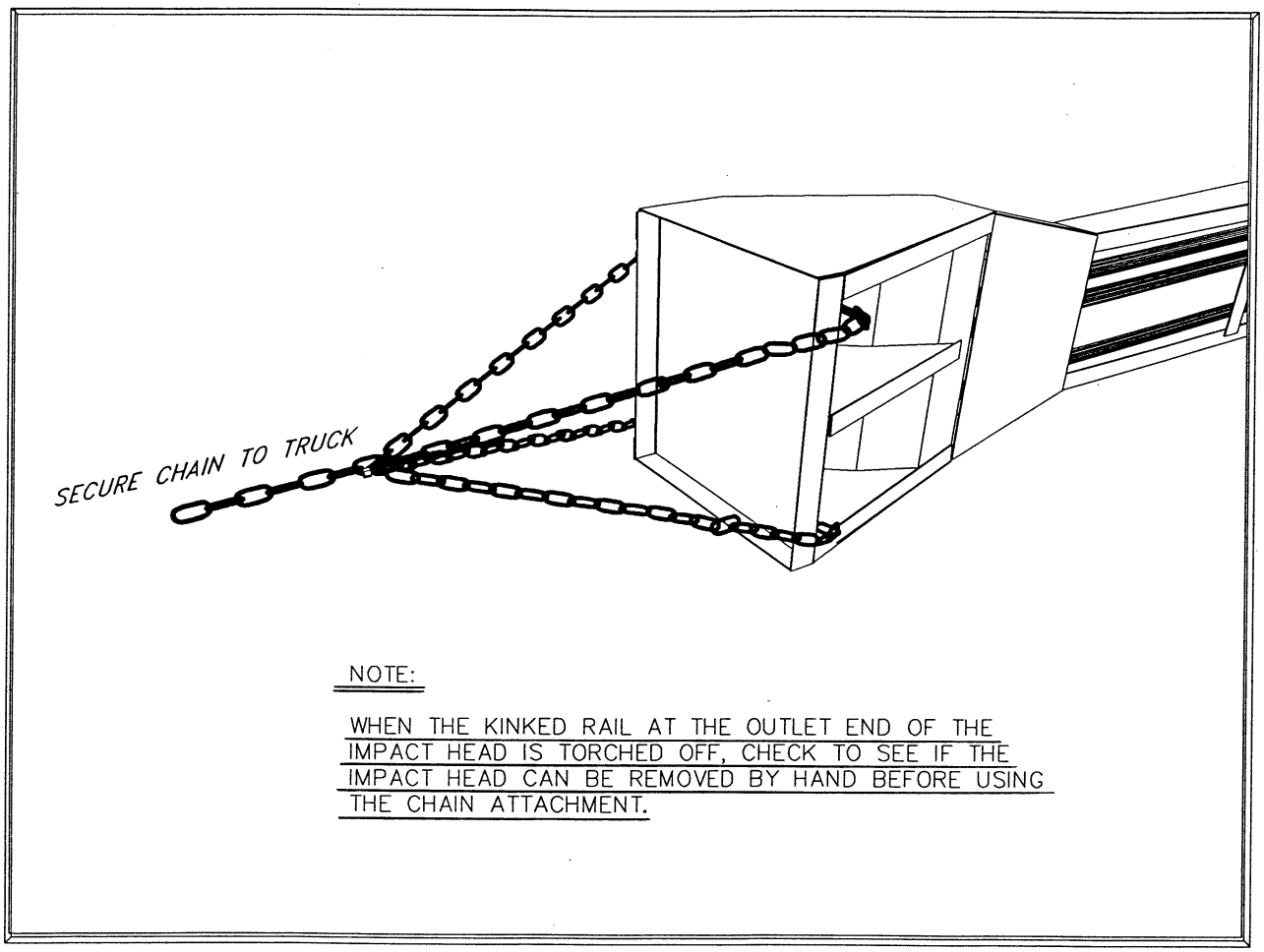

Figure 11. Chain Attachment to Remove Impact Head

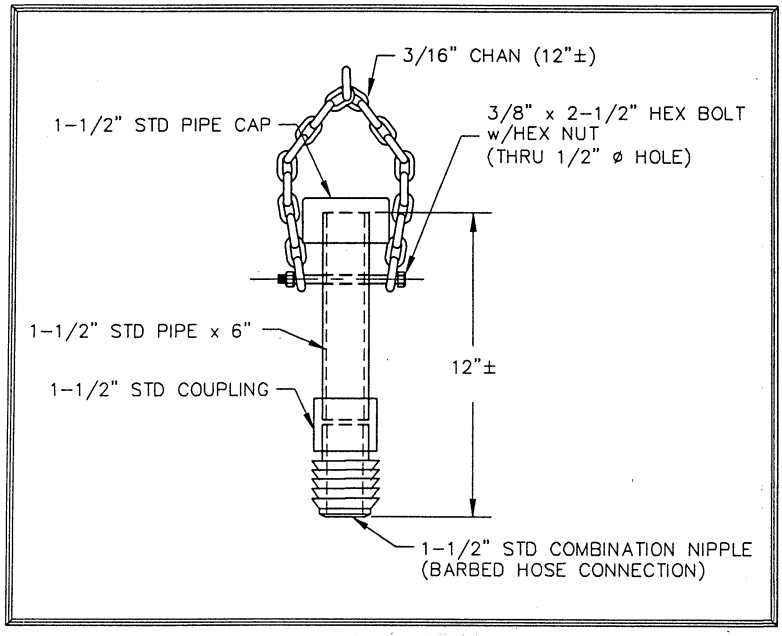

Figure 12. Wood Post Pulling Tool (Pipe Option)

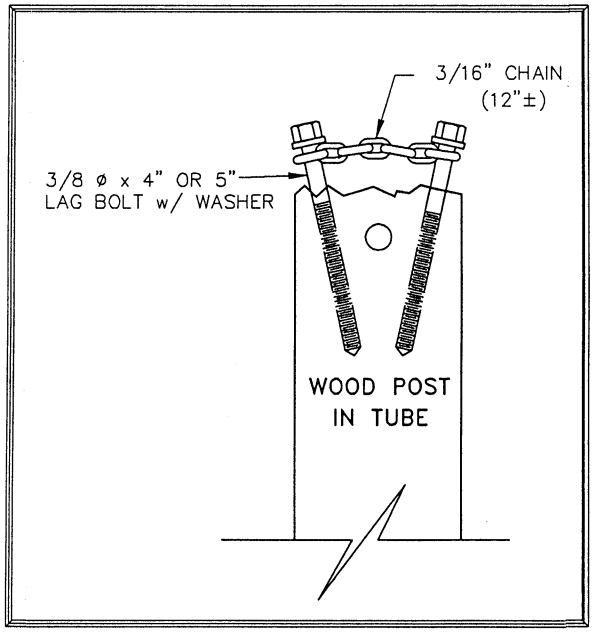

Figure 13. Wood Post Pulling Tool (Lag Screw Option)

NOTES

NOTES

NOTES