23 USC § 409 Documents
NDDOT Reserves All Objections

MEMORANDUM

TO: HSIP File

FROM: Chad Abrahamson – Traffic Operations

DATE: May 28, 2014

SUBJECT: HSIP #841701, Fargo, Radial-T Intersection at ND 18 and RP 111.8

The Fargo District has requested the installation of a radial-T intersection on ND 18 at RP 111.8 and to consider turn lanes. The district indicates that this project will improve safety at this location.

There was 1 reported crash related to the intersections during the five year period of 1/1/2009 to 12/31/2013. See Appendix A for Crash Report.

The latest traffic volume counts were taken in 2014 for ND 18 at the intersections of 4th St SE and 151st Ave SE. Based on the traffic counts, turn lanes are not warranted. See Appendix B for Traffic Data.

A radial-T intersection is proposed on ND 18 at RP 111.8 to eliminate the two skewed intersections that currently exist.

It is recommended to approve HSIP funding to pay for this project. Attached is a proposed alignment.

35/cta

Proposed Radial-T Intersection

23 USC 409 Documents
NDDOT Reserves All Objections

ND 18 - RP111.800

N
W
E
S

Appendix A

Crash Summary Sheets

Total Crashes: 1
Sorted by:

City: Fargo District
Location: ND 18, RP 111.8

	M	D	Year
Start Date:	1	1	2009
End Date:	12	31	2013

Number of Years: 5.00

Notes:

23 USC § 409 Documents
NDDOT Reserves All Objections

Statistics

Crash Severity

Fatal =	0	0%
InjA =	0	0%
InjB =	0	0%
InjC =	0	0%
PDO =	1	100%
	1	

Surface Conditions

Dry =	0	0%
Wet =	0	0%
Ice / Snow =	1	100%
Other =	0	0%
	1	

Lighting Conditions

Dawn =	0	0%
Daylight =	0	0%
Dusk =	1	100%
Dark =	0	0%
Dark (lighted) =	0	0%
	1	

Under Construction

Yes =	0	0%

Day of Week

Monday =	0	0%
Tuesday =	0	0%
Wednesday =	1	100%
Thursday =	0	0%
Friday =	0	0%
Saturday =	0	0%
Sunday =	0	0%
	1	

Time of Day

Midnight - 6:59am =	0	0%
7am - 7:59am =	0	0%
8am - 8:59am =	0	0%
9am - 9:59am =	0	0%
10am - 10:59am =	0	0%
11am - 11:59am =	0	0%
Noon - 12:59pm =	0	0%
1pm - 1:59pm =	0	0%
2pm - 2:59pm =	0	0%
3pm - 3:59pm =	0	0%
4pm - 4:59pm =	1	100%
5pm - 5:59pm =	0	0%
6pm - 6:59pm =	0	0%
7pm - 7:59pm =	0	0%
8pm - 8:59pm =	0	0%
9pm - 9:59pm =	0	0%
10pm - 10:59pm =	0	0%
11pm - 11:59pm =	0	0%
	1	

V1 and V2 Configuration*

Passenger Car =	1
PU / Van / Utility =	0
Truck =	0
Bus / Motorhome =	0
Motorcycle + Moped =	0

These are only the most popular choices.

V1 and V2 Directions*

North =	0
South =	0
East =	1
West =	0

D1 and D2 Sex*

Female =	1
Male =	0

D1 and D2 Age*

0-17 =	0	45-54 =	0
18-24 =	1	55-64 =	0
25-34 =	0	65-74 =	0
35-44 =	0	75+ =	0

D1 and D2 Alcohol / Drugs*

Yes (alcohol or drugs present) =	0

*This info is not available for all units.

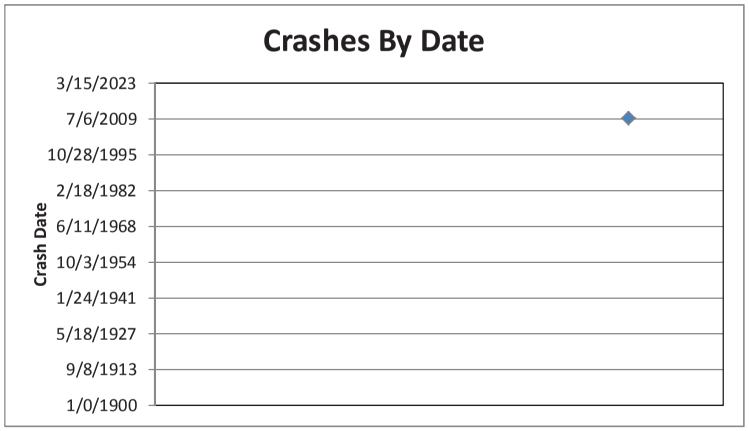

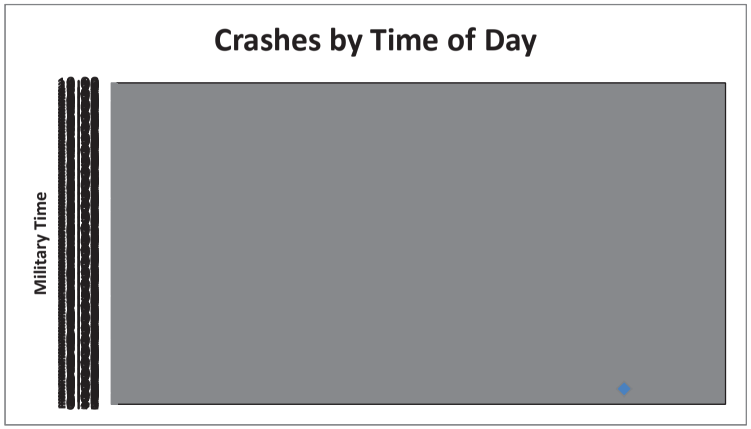

*Within the Manner of Collision table, values equal to zero are not shown in order to reduce clutter.

Manner of Collision

Yr	Start Date	End Date	Angle					Rear End					Left Turn					Sideswipe Same Dir.					Backing	Ped / Bike	Single Veh.	Other	Total
			NB+EB	NB+WB	SB+EB	SB+WB	Sub Tot	NB	SB	EB	WB	Sub Tot	NB to WB	SB to EB	EB to NB	WB to SB	Sub Tot	NB	SB	EB	WB	Sub Tot					
1	1/1/2009	12/31/2009																							1		**1**
2	1/1/2010	12/31/2010																									**0**
3	1/1/2011	12/31/2011																									**0**
4	1/1/2012	12/31/2012																									**0**
5	1/1/2013	12/31/2013																									**0**
			0	**0**	**0**	**0**	**0**	**0**	**0**	**0**	**0**	**0**	**0**	**0**	**0**	**0**	**0**	**0**	**0**	**0**	**0**	**0**	**0**	**0**	**1**	**0**	**1**

For Crash Severity: Fatal = Fatality, InjA = Incapacitating Injury, InjB = Non-Incapacitating Injury, InjC = Possible Injury, PDO = Property Damage Only

Crash Summary Sheets

Total Crashes: 1
Sorted by: 0

City: Fargo District
Location: ND 18, RP 111.8

	M	D	Year
Start Date:	1	1	2009
End Date:	12	31	2013

Number of Years: 5.00

Notes:

23 USC § 409 Documents
NDDOT Reserves All Objections

	Number / Severity / Constr.	Date / Day / Time	Lighting / Weather / Surface Cond	Veh # / Age / Sex	Address	Alcohol or Drugs	Contributing Factors	Unit Configuration	Dir. of Travel	Traffic Control	Manner of Collision	Shortened Narrative	Diagram
1	193166 PDO No	12/2/2009 Wednesday 4:40 PM	Dusk eet/hail/freezing Ra Ice / Snow	V1 21 F	Hazen, ND	No	To Fast For Conditions	Psgr Car	East	Stop Sign	Single Veh.	V1 was EB on Co Rd 9, V1 attempted to stop at stop sign, V1 slid on icy roadway, V1 slid into the ditch, and V1 hit the stop sign.	
2													
3													
4													
5													
6													
7													
8													
9													
10													

For Crash Severity: Fatal = Fatality, InjA = Incapacitating Injury, InjB = Non-Incapacitating Injury, InjC = Possible Injury, PDO = Property Damage Only

Appendix B

ND 18 & 4th St SE

Existing Conditions

	Major Road	Minor Road	
Reference Points	111.65		
Speed Limits	65	45	MPH
Select Major Road Directions	North-South		
Intersection/Junction Traffic Control	Stop on Minor Road		
Major Road a Divided Highway?	No		
Terrain	Level		

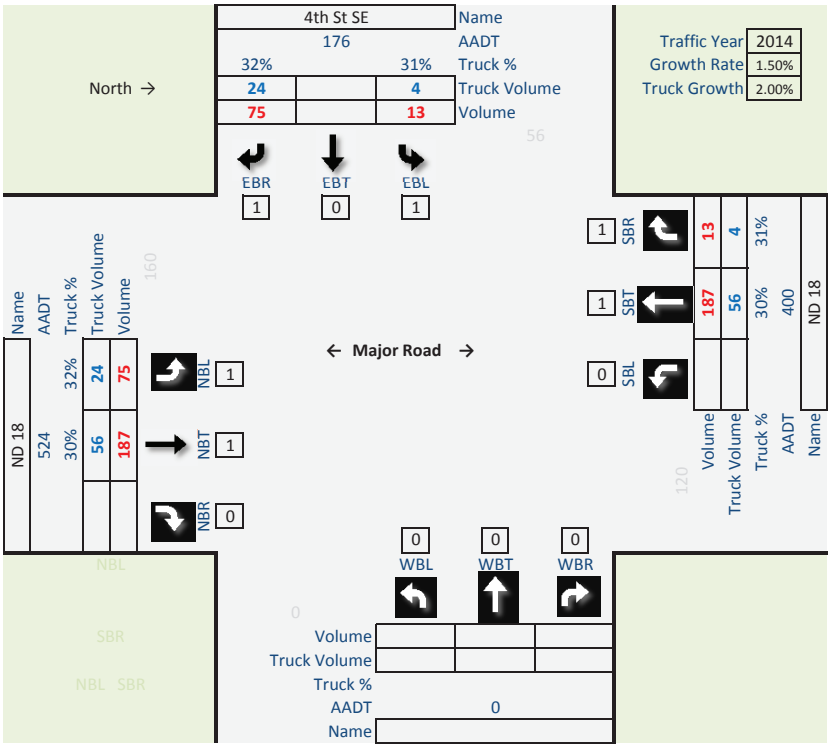

Project Info

HSIP	841701

Projected 2034 AADTs

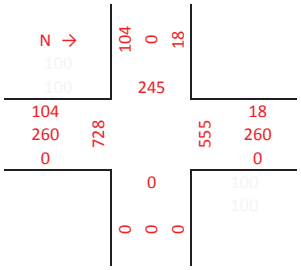

Projected 2034 TAADTs

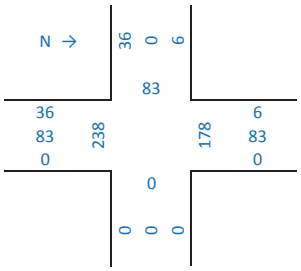

Projected 2034 Truck %

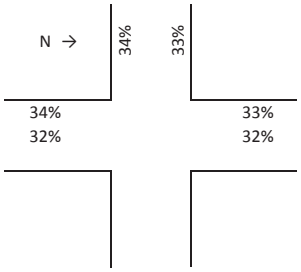

Crashes

Number of crashes suseptible to correction by a turn lane within the last 3 years:	
NBL	
NBR	
SBL	
SBR	

Number of crashes suseptible to correction by a traffic control signal within a 12-month period:

Turn Lane Criteria

Turn lane crash criteria?	No
Major corridor AADT ≥ 750 vpd?	No
Speed Limit ≥ 50 mph?	Yes

	PCE	AADT ≥ 750 & PCE ≥ 125?	Projected Year Criteria may be met
NBL	87	No	
NBR	0	No	
SBL	0	No	
SBR	15	No	

Rough Estimate of MUTCD Traffic Signal Warrants

Include minor road right turn volumes?	Yes	
Isolated community with a population less than 10,000?	Yes	Y
Number of Lanes for moving traffic on major road	1	
Number of Lanes for moving traffic on minor road	1	

Signal warrant #1 may be met in year:	**N/A**
Signal warrant #7 may be met in year:	**N/A**
Criteria for all-way stop may be met in year:	**N/A**

Suggested Turn Lane Distances

		L1	L2	L3	L4	Full Width Length
Major	NBL	180	530	710	100	L2+L4=630
	NBR	180	530	710	0	L2+L4=530
	SBL	180	530	710	100	L2+L4=630
	SBR	180	530	710	0	L2+L4=530
Minor	WBL	144	0	144	100	L2+L4=100
	WBR	144	0	144	100	L2+L4=100
	EBL	144	0	144	100	L2+L4=100
	EBR	144	0	144	100	L2+L4=100

Proposed Work

ND 18 & 151st Ave SE

Existing Conditions

	Major Road	Minor Road	
Reference Points	112		
Speed Limits	65	45	MPH
Select Major Road Directions	North-South		
Intersection/Junction Traffic Control	Stop on Minor Road		
Major Road a Divided Highway?	No		
Terrain	Level		

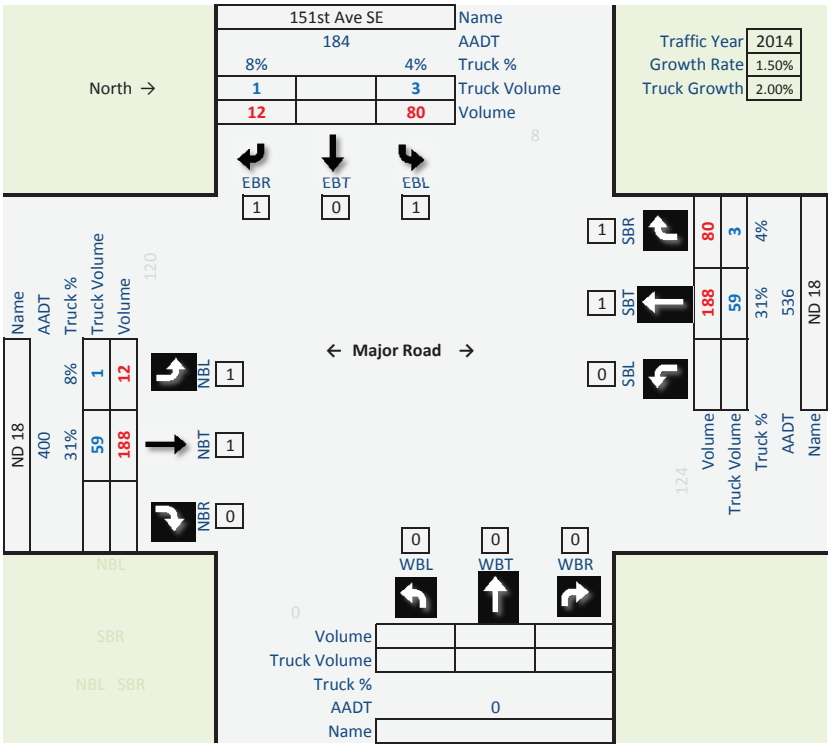

Crashes

Number of crashes suseptible to correction by a turn lane within the last 3 years:

NBL	
NBR	
SBL	
SBR	

Number of crashes suseptible to correction by a traffic control signal within a 12-month period:

Turn Lane Criteria

Turn lane crash criteria?	No
Major corridor AADT ≥ 750 vpd?	No
Speed Limit ≥ 50 mph?	Yes

	PCE	AADT ≥ 750 & PCE ≥ 125?	Projected Year Criteria may be met
NBL	13	No	
NBR	0	No	
SBL	0	No	
SBR	82	No	

Suggested Turn Lane Distances

		L1	L2	L3	L4	Full Width Length
Major	NBL	180	530	710	100	L2+L4=630
	NBR	180	530	710	0	L2+L4=530
	SBL	180	530	710	100	L2+L4=630
	SBR	180	530	710	0	L2+L4=530
Minor	WBL	144	0	144	100	L2+L4=100
	WBR	144	0	144	100	L2+L4=100
	EBL	144	0	144	100	L2+L4=100
	EBR	144	0	144	100	L2+L4=100

Project Info

HSIP	841701

Projected 2034 AADTs

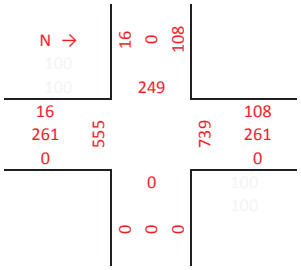

Projected 2034 TAADTs

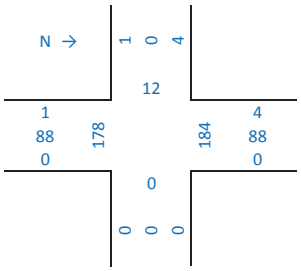

Projected 2034 Truck %

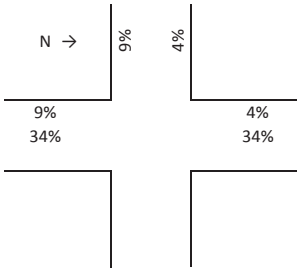

Rough Estimate of MUTCD Traffic Signal Warrants

Include minor road right turn volumes?	Yes	
Isolated community with a population less than 10,000?	Yes	Y
Number of Lanes for moving traffic on major road	1	
Number of Lanes for moving traffic on minor road	1	

Signal warrant #1 may be met in year:	**N/A**
Signal warrant #7 may be met in year:	**N/A**
Criteria for all-way stop may be met in year:	**N/A**

Proposed Work

ND 18 & Proposed Radial-T

Existing Conditions

	Major Road	Minor Road	
Reference Points	111.8		
Speed Limits	65	45	MPH
Select Major Road Directions	North-South		
Intersection/Junction Traffic Control	Stop on Minor Road		
Major Road a Divided Highway?	No		
Terrain	Level		

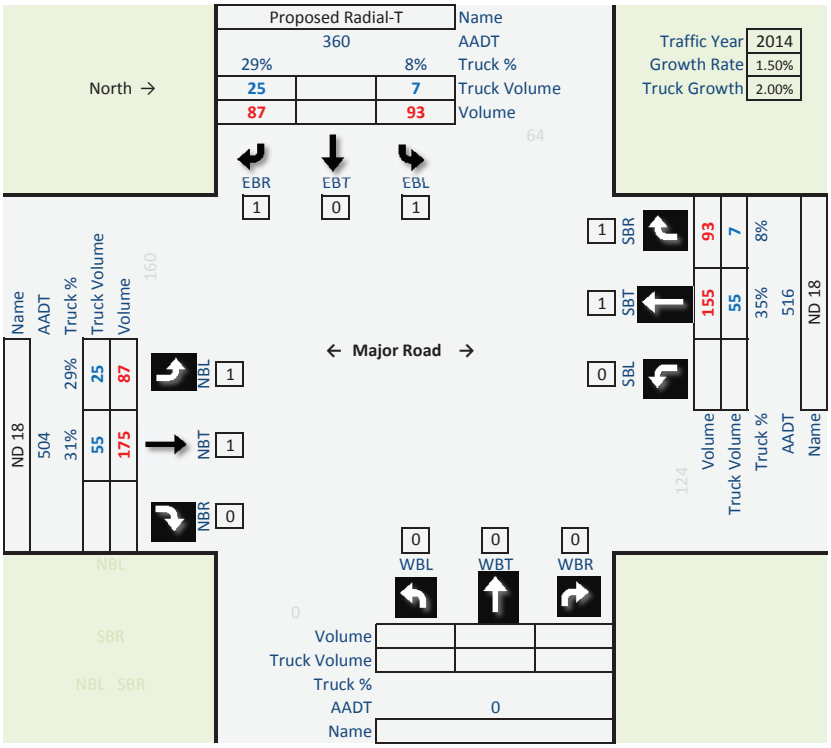

Project Info

HSIP	841701

Projected 2034 AADTs

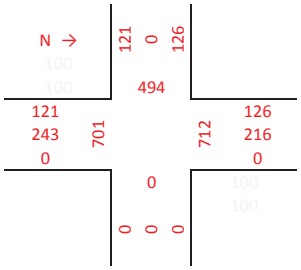

Projected 2034 TAADTs

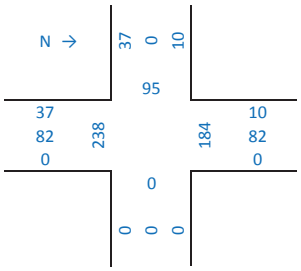

Projected 2034 Truck %

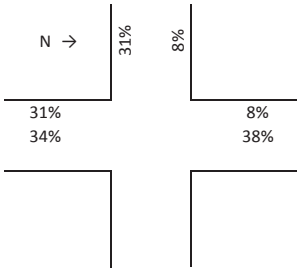

Crashes

Number of crashes suseptible to correction by a turn lane within the last 3 years:

NBL	
NBR	
SBL	
SBR	

Number of crashes suseptible to correction by a traffic control signal within a 12-month period:

Turn Lane Criteria

Turn lane crash criteria?	No
Major corridor AADT ≥ 750 vpd?	No
Speed Limit ≥ 50 mph?	Yes

	PCE	AADT ≥ 750 & PCE ≥ 125?	Projected Year Criteria may be met
NBL	100	No	
NBR	0	No	
SBL	0	No	
SBR	97	No	

Rough Estimate of MUTCD Traffic Signal Warrants

Include minor road right turn volumes?	Yes	
Isolated community with a population less than 10,000?	Yes	Y
Number of Lanes for moving traffic on major road	1	
Number of Lanes for moving traffic on minor road	1	

Signal warrant #1 may be met in year:	**N/A**
Signal warrant #7 may be met in year:	**N/A**
Criteria for all-way stop may be met in year:	**N/A**

Suggested Turn Lane Distances

		L1	L2	L3	L4	Full Width Length
Major	NBL	180	530	710	100	L2+L4=630
	NBR	180	530	710	0	L2+L4=530
	SBL	180	530	710	100	L2+L4=630
	SBR	180	530	710	0	L2+L4=530
Minor	WBL	144	0	144	100	L2+L4=100
	WBR	144	0	144	100	L2+L4=100
	EBL	144	0	144	100	L2+L4=100
	EBR	144	0	144	100	L2+L4=100

Proposed Work