33" x 36" SPREAD SUSPENDED PRESTRESSED BOX GIRDER (COMPOSITE SLAB)

D-604-3

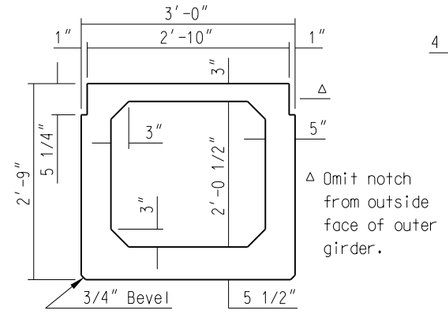

(SHOWING TYPICAL DIMENSIONS)

A-A

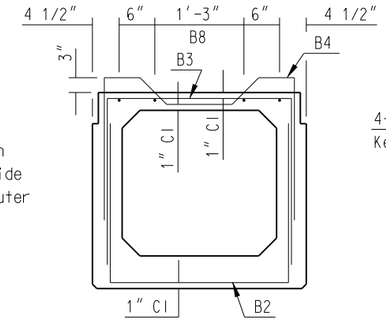

(SHOWING REINFORCING)

A-A

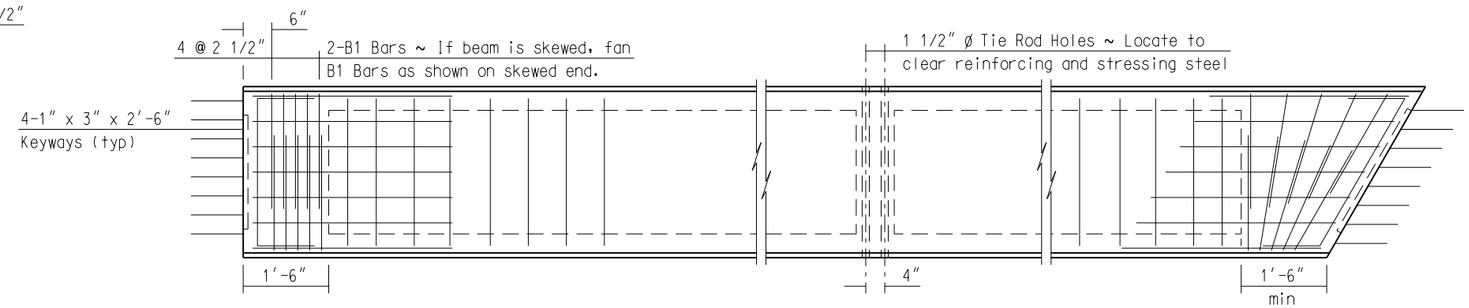

(PART SHOWING SQUARED END)

PLAN

(PART SHOWING SKEWED END)

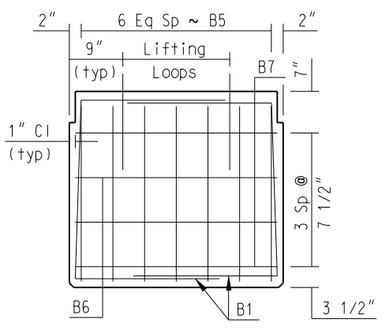

B-B

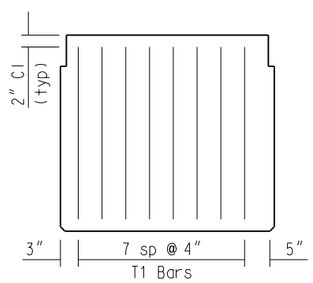

END VIEW

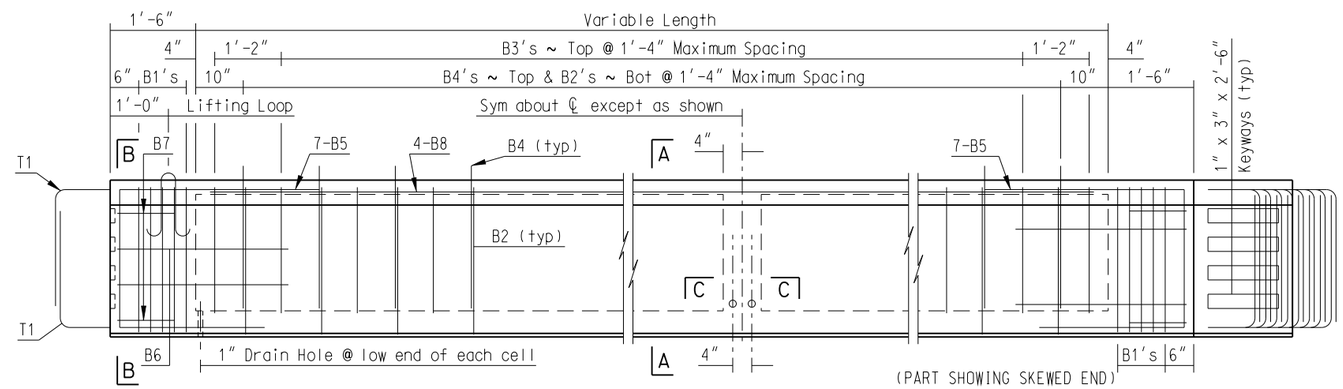

(PART SHOWING SQUARED END)

ELEVATION

(PART SHOWING SKEWED END)

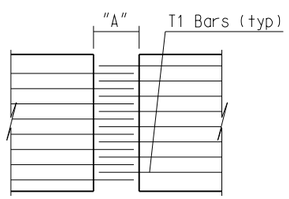

GIRDER END PLAN AT PIER

* Welded Wire Fabric with minimum circumferential steel area of 0.15 sq in per ft may be substituted for B2's and B3's.

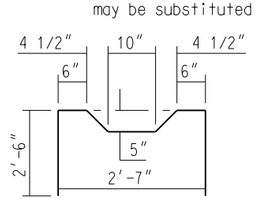

B4

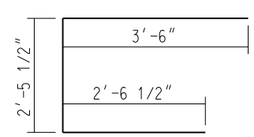

B5

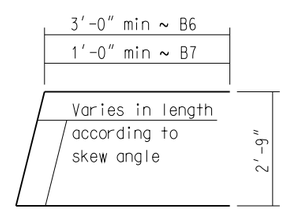

B6 & B7

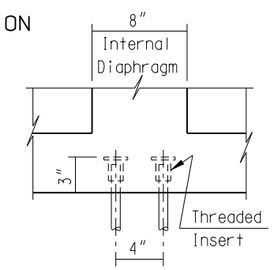

(OUTER GIRDERS ONLY)

DIAPHRAGM BAR INSERT

C-C

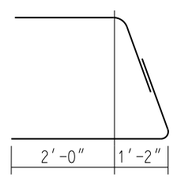

(AT ABUTMENTS)

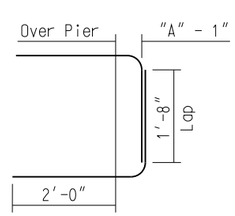

(AT PIERS)

** FIELD BEND AS SHOWN (GRADE 40)

T1

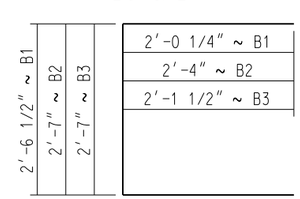

B1, B2 & B3

BENT BAR DETAILS

	BAR LIST			
	MARK	SIZE	LENGTH	SHAPE
*	B1	4	6'-7"	BENT
*	B2	4	7'-3"	BENT
	B3	4	6'-10"	BENT
	B4	4	8'-0"	BENT
	B5	5	8'-6"	BENT
	B6	4	VARIABLE	STR.
	B7	4	VARIABLE	STR.
	B8	4	VARIABLE	STR.
**	T1	4	VARIABLE	STR.

NOTES:

At least 14 days prior to the forming and casting of any girders, the Contractor shall submit shop drawings to the Construction Office of the North Dakota Department of Transportation for approval. The final prestress force shall be calculated using calculated losses as specified in the AASHTO Standard Specifications for Highway Bridges. Strand pattern arrangements shall assure compressive and tensile stresses are within the limits as specified in the AASHTO Standard Specifications for Highway Bridges. Minor changes to the shape of the girder and to the reinforcing steel may be made to accomodate the forms of various contractors and construction methods and shall be shown on the shop drawings.

The girders shall be cast in all-steel forms. The reinforcing steel shall be grade 60.

C.G. = 14.85" from bottom: Area = 558.5 sq in:
Moment of Inertia = 73,708 in^4

NORTH DAKOTA DEPARTMENT OF TRANSPORTATION	
MAR 95	
REVISIONS	
DATE	CHANGE
18 NOV 03	Standardize format & increase B5 bar size to 5.
01 DEC 04	PE stamp added

This document was originally issued and sealed by TERRENCE R. UDLAND Registration Number PE- 2674, on 12/01/04 and the original document is stored at the North Dakota Department of Transportation

Weight of girder in tons = (0.2909)(Length of girder in ft) + (0.215)(# of Diaphragms) + (0.9672)(1 + Tangent of skew angle)