FEED POINTS
(ROADWAY LIGHTING)

D-770-2

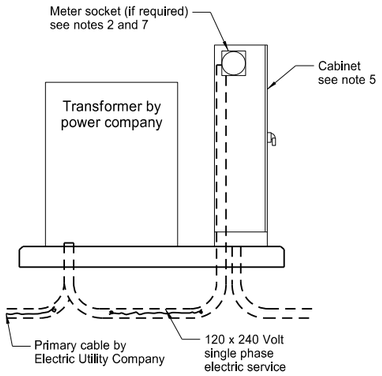

Elevation

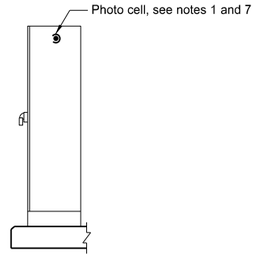

Photo Cell
Mounting Detail

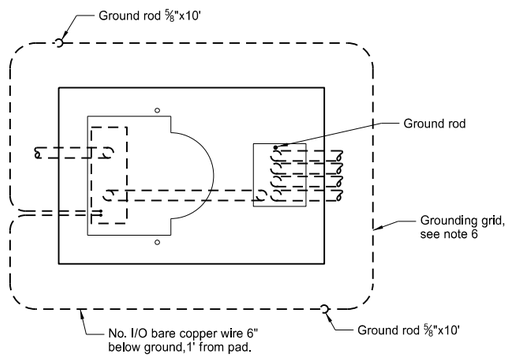

Plan

Transformer and Feed Point Cabinet Pad Mounted

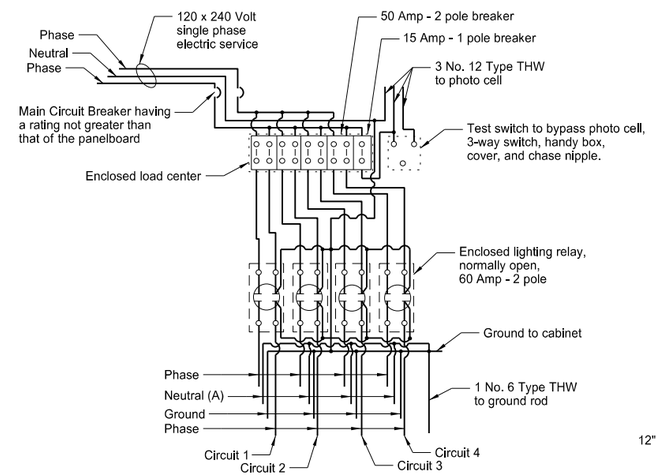

Feed Point Type IV

Type I feed point is similar to Type IV except only one electrical circuit, one 50 Amp - 2 pole breakers and one lighting relay, normally open, shall be installed.

Type II feed point is similar to Type IV except only two electrical circuit, two 50 Amp - 2 pole breakers and two lighting relays, normally open, shall be installed.

Type III feed point is similar to Type IV except only three electrical circuits, three 50 Amp - 2 pole breakers and three lighting relays, normally open, shall be installed.

(A) Install when festoon circuit is required.

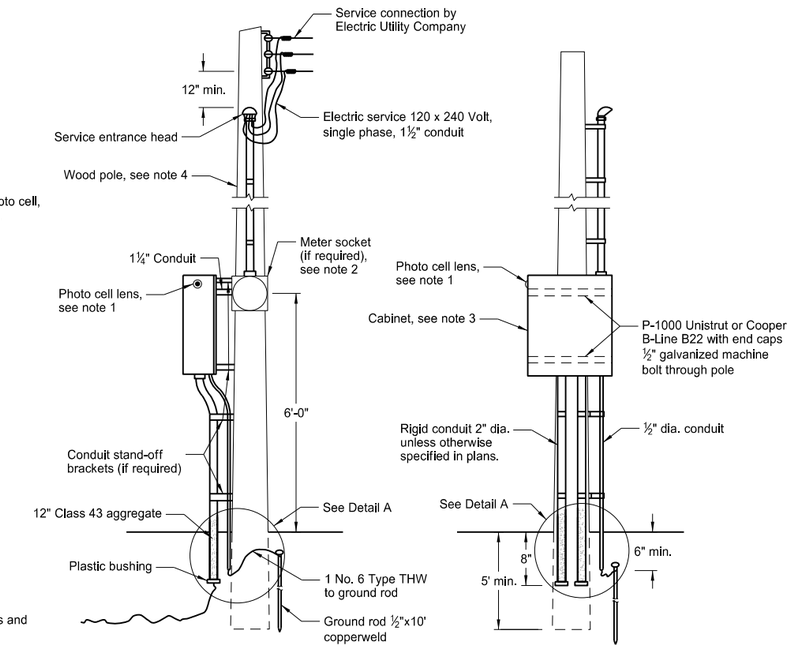

Feed Point Pole Mounted

Notes:

1. Photo Cell: The electrical contractor shall furnish and install the photoelectric cell. The photo lens shall face north.
2. Meter Socket: The contractor shall install the meter socket and trim if the meter is required by local Utility Company. Meter to be furnished and installed by Utility Company.
3. Pole Mounted Cabinet: Cabinet shall have lock drip shield, factory installed steel backing, stainless steel hardware, and side hinge door. Cabinet shall be shop coated with one coat of primer and have two coats of exterior gray enamel.

   Type I and II feed point shall be 30" high x 24" wide x 8" deep, Type III and IV feed point shall be 30" high x 42" wide x 10" deep or 36" high x 36" wide x 10" deep.
4. Wood Pole: Minimum 20' Class VII full length penta pressure treated wood pole. (if required, see layout sheets)
5. Pad Mounted Cabinet: Cabinet shall be 56" high x 26" wide x 14" deep. Minimum 12 gauge steel or aluminum with provisions for padlock. Cabinet shall be weatherproof. A steel cabinet shall have one coat of primer and two coats of exterior dark green enamel.
6. Grounding Grid: The grounding grid shall have a ground resistance not to exceed 25 ohms. This shall be obtained by one or more ⅝"x10' copperweld ground rods in parallel or series at two corners. Minimum distance between ground unit assemblies shall be 6'0".
7. Meter Location: The meter (if required) shall not be mounted on the same side of the cabinet as the photo cell.

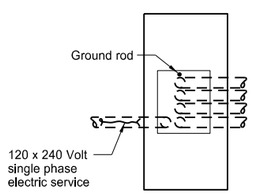

Plan

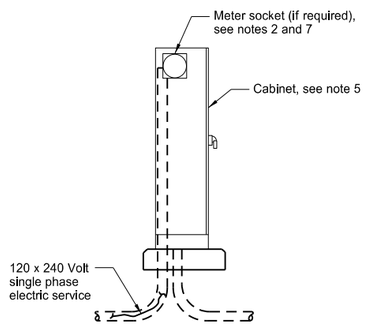

Elevation

Feed Point Cabinet Pad Mounted

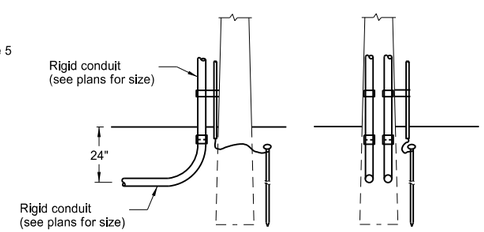

Detail A

Use this detail if there is a continuous run of conduit from the feed point to the first light standard.

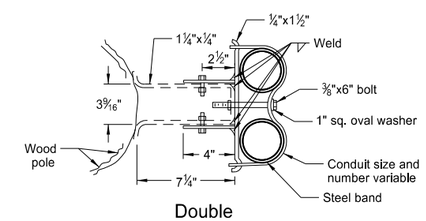

Double

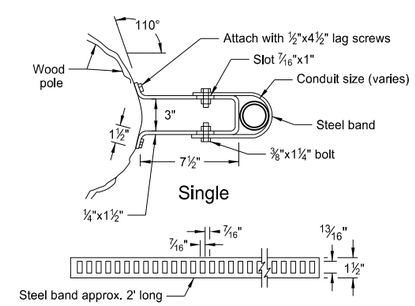

Single

Conduit Standoff Bracket

The conduit standoff brackets may be omitted if not required by the local utility company.

NORTH DAKOTA DEPARTMENT OF TRANSPORTATION	
10-8-13	
REVISIONS	
DATE	CHANGE
7-8-14	Revised note 3

This document was originally issued and sealed by Roger Weigel, Registration Number PE- 2930, on 07/08/14 and the original document is stored at the North Dakota Department of Transportation