W-BEAM TRANSITION TO IN PLACE CONCRETE SAFETY SHAPE TRANSITION

D-764-11

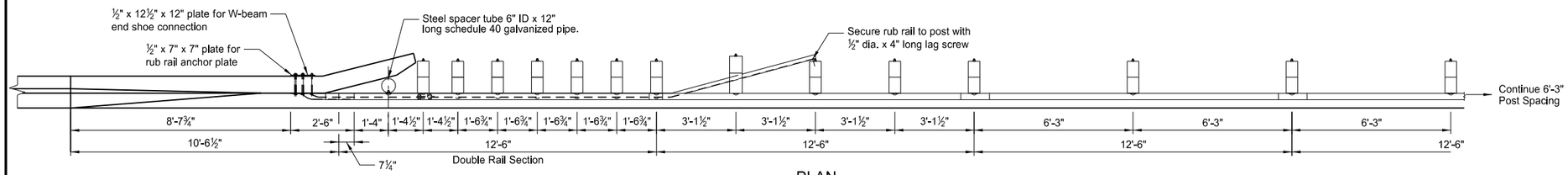

PLAN

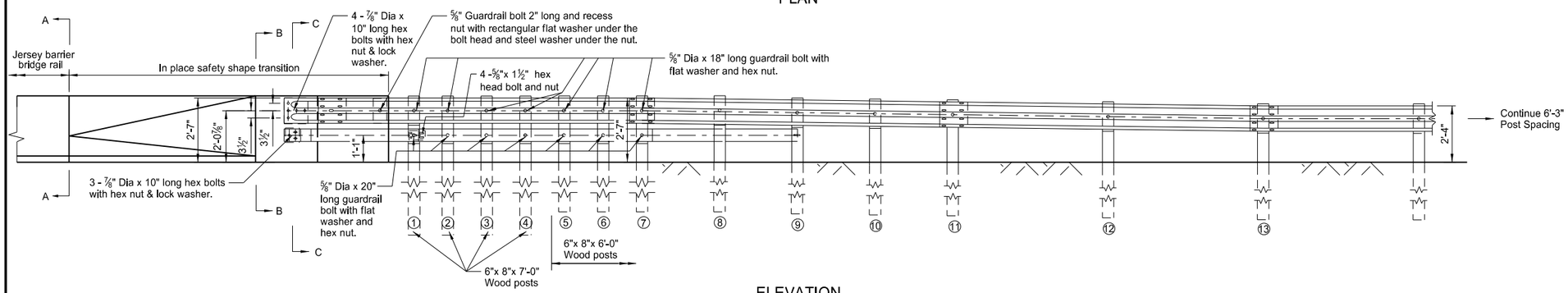

ELEVATION

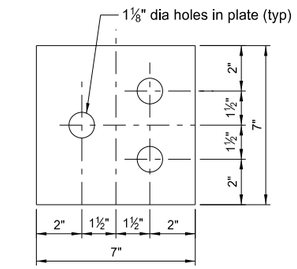

RUB RAIL ANCHOR PLATE
(7"x 7"x ½")

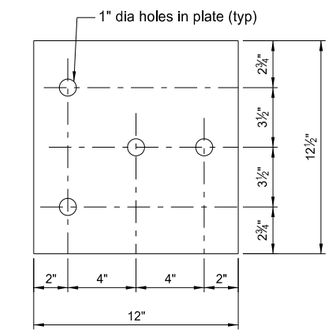

W-BEAM TERMINAL CONNECTOR PLATE
(12"x12½" x⅝")

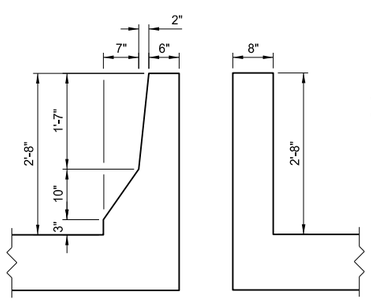

SECTION A-A

SECTION B-B

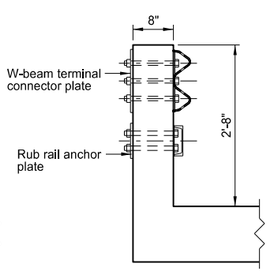

SECTION C-C

Note:
The bolt holes shall be drilled through the Safety Shape wall. If reinforcing steel is encountered it shall be drilled through.

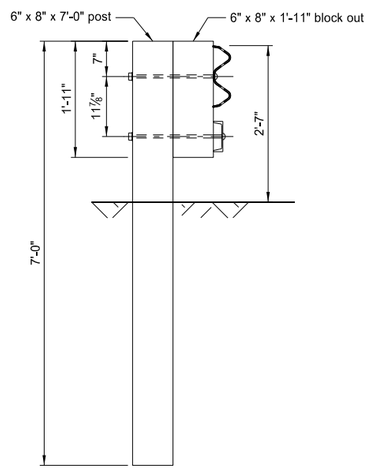

Detail
Post #1 to #4

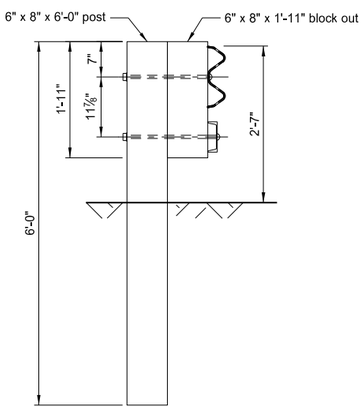

Detail
Post #5 to #7

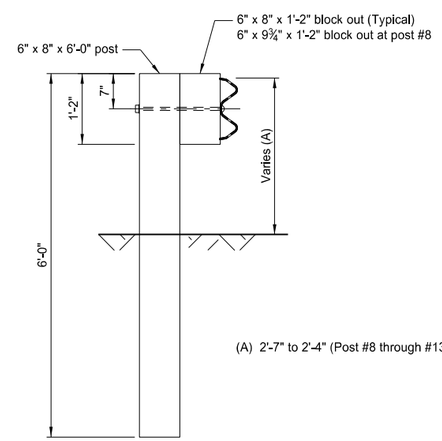

(A) 2'-7" to 2'-4" (Post #8 through #13)

Detail
Post #8 to #13

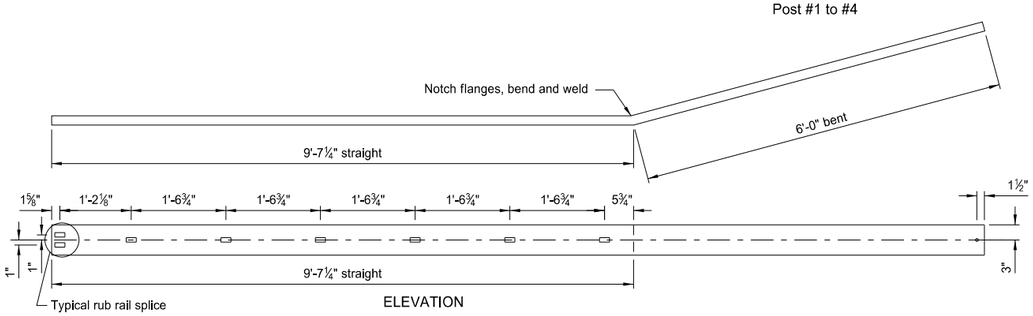

C6 x 8.2 RUB RAIL BENT SECTION

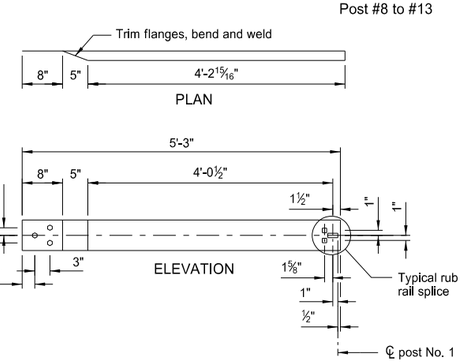

C6 x 8.2 RUB RAIL STRAIGHT SECTION

NORTH DAKOTA DEPARTMENT OF TRANSPORTATION	
10-11-13	
REVISIONS	
DATE	CHANGE

This document was originally issued and sealed by Roger Weigel, Registration Number PE- 2930, on 10/11/13 and the original document is stored at the North Dakota Department of Transportation