# SIGN PUNCHING, STRINGER AND SUPPORT LOCATION DETAILS FOR STREET NAME SIGNS AND 911 SIGNS

D-754-87

A - Single sign
B - Single sign back to back
C - Single sign each direction
D - Single sign one direction, back to back other direction
E - Back to back both directions

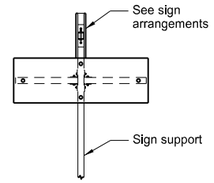


1 Post

Special Assembly 1 (A, B, C, D or E)

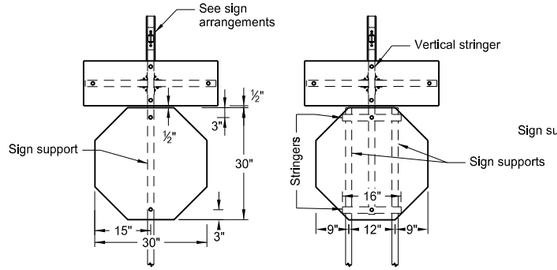


1 Post 2 Posts

Special Assembly 2 (A, B, C, D or E)

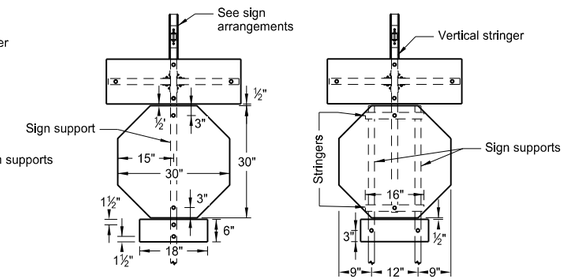


1 Post 2 Posts

Special Assembly 3 (A, B, C, D or E)

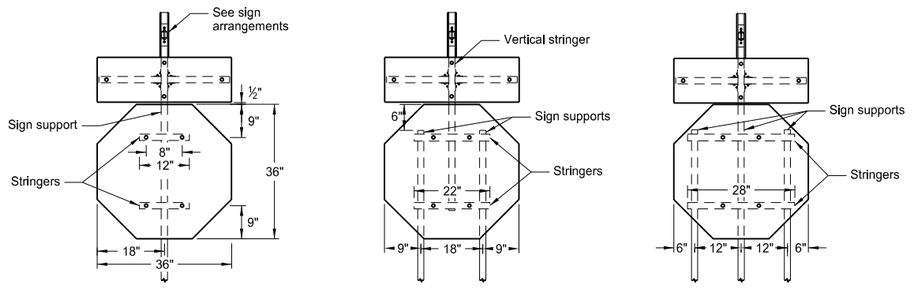


1 Post 2 Posts 3 Posts

Special Assembly 4 (A, B, C, D or E)

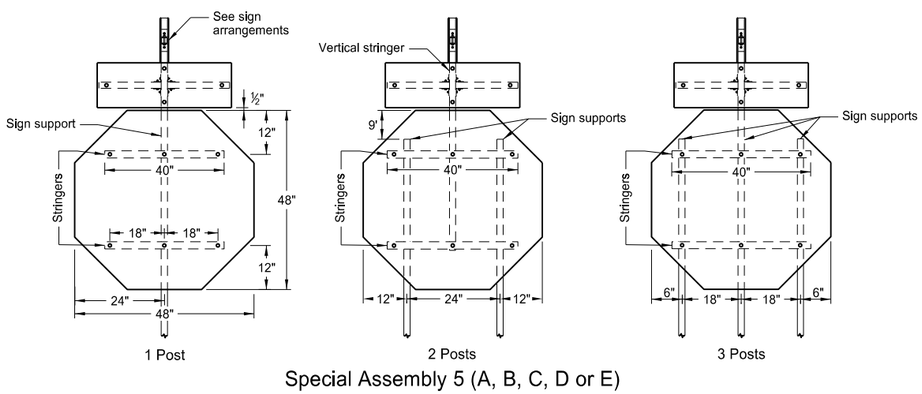


1 Post 2 Posts 3 Posts

Special Assembly 5 (A, B, C, D or E)

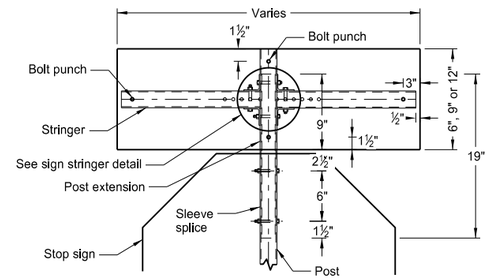


Front View

Sleeve Splice Detail

Note: The splice method may be used upon approval of the engineer.

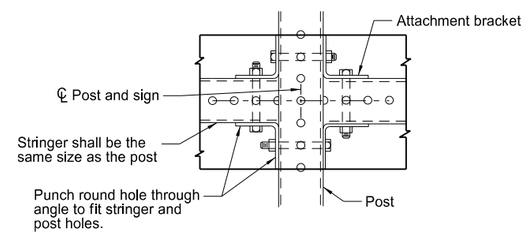


Sign Stringer Detail

Note: See Standard Drawing D-754-86 for 911 support information and sign layout details.

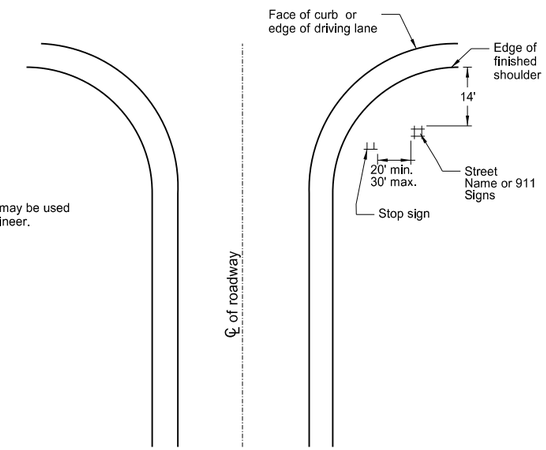


Intersection Layout

Note: This layout is to be used for street name signs or 911 signs that are used with Special Assembly 1 .

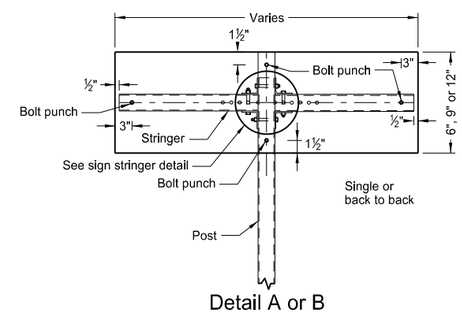


Detail A or B

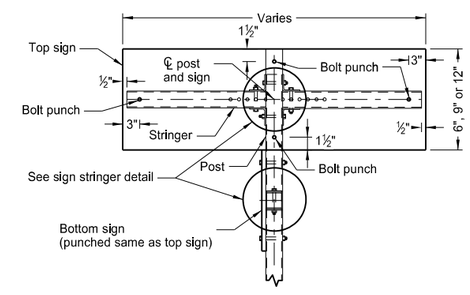


Detail C

Sign Arrangements

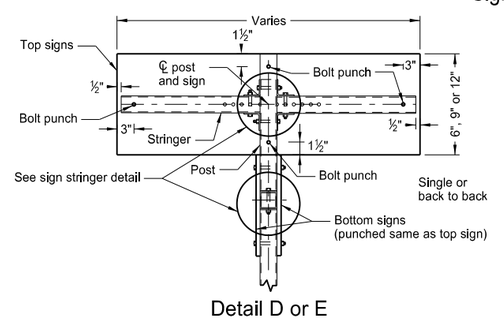


Detail D or E

| NORTH DAKOTA DEPARTMENT OF TRANSPORTATION | |
|---|---|
| 10-3-13 | |
| REVISIONS | |
| DATE | CHANGE |

This document was originally issued and sealed by Roger Weigel Registration Number PE- 2930 , on 10/3/13 and the original document is stored at the North Dakota Department of Transportation