INLET - TYPE 2

D-722-2

Pay Items
Inlet - Type 2 .....Ea.
Inlet - Type 2, Double.....Ea.

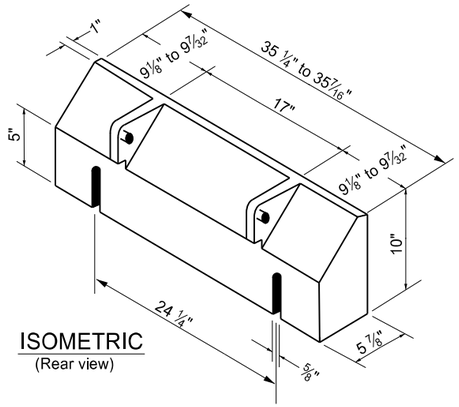

ISOMETRIC
(Rear view)

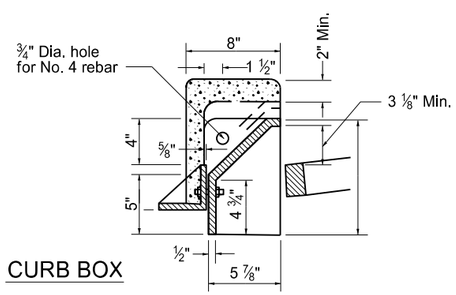

CURB BOX

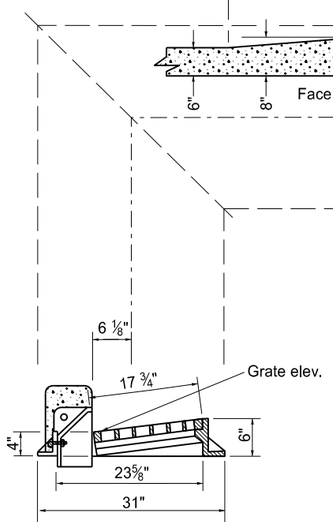

SIDE

GRATE STYLE "L"
(Min. Waterway Area - 1.9 Sq. Ft.)

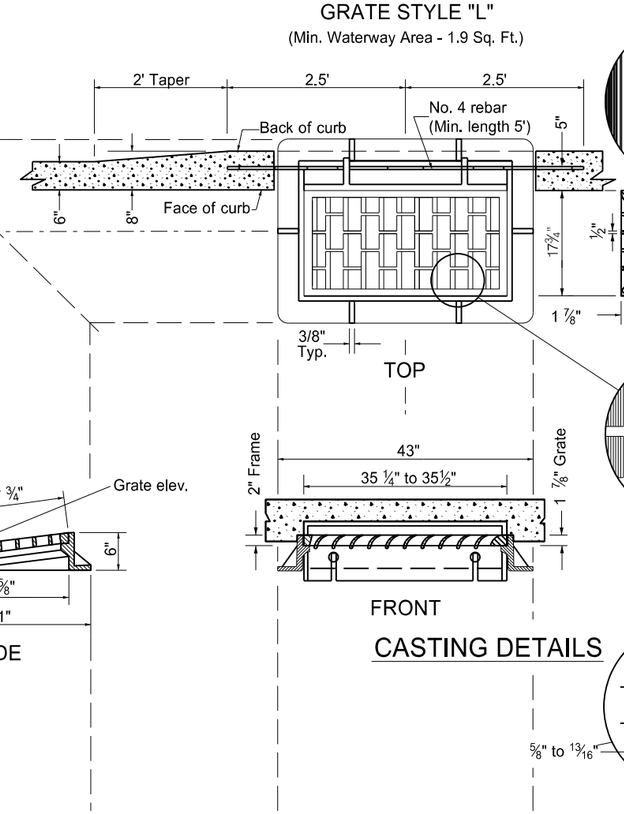

TOP

FRONT

CASTING DETAILS

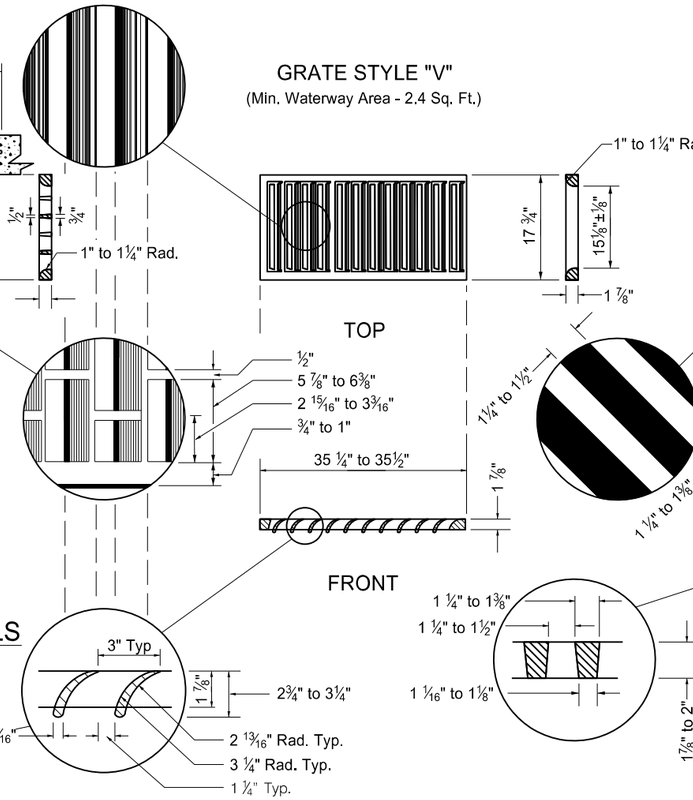

GRATE STYLE "V"
(Min. Waterway Area - 2.4 Sq. Ft.)

TOP

FRONT

GRATE STYLE "D"
(Min. Waterway area - 1.6 Sq. Ft.)

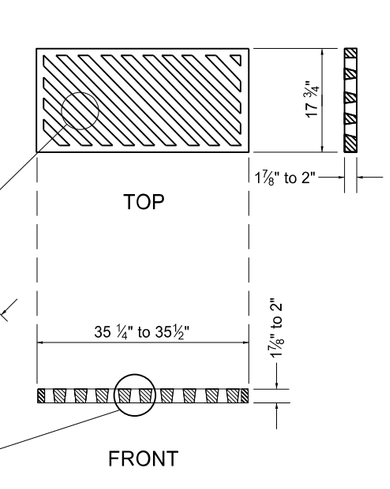

TOP

FRONT

Notes:

1. Drainage structure castings shall be manufactured in accordance with AASHTO M306. Metal used in the manufacture of castings shall conform to AASHTO M105 Class 35B.
2. Other castings, similar in dimension, may be used if the casting conforms to the riser section and has the grate style as specified in the plans. If modifications to the inlet riser are required to accomodate similar castings, the contractor must receive written approval from the engineer.
3. Precast risers shall be constructed in accordance with ASTM C858.
4. The contractor shall have the option of using precast or poured in place bases. Cast in place concrete shall be Class AE-3. Construction shall be in accordance with section 722 of the Standard Specifications.
5. On projects with P.C.C. pavement, all inlet risers or barrels shall be constructed 4 to 5 inches below final elevation and adjusted to final grade after paving. Adjustment may be done with adjusting rings or cast-in-place concrete. All costs for this adjustment shall be included in the price bid for the inlet.
6. Welded wire reinforcing fabric shall conform to AASHTO M55 Grade 65.
7. The deformed reinforcing steel shall conform to AASHTO M31.

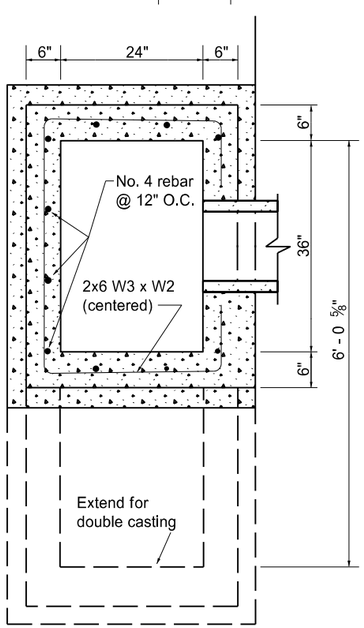

TOP

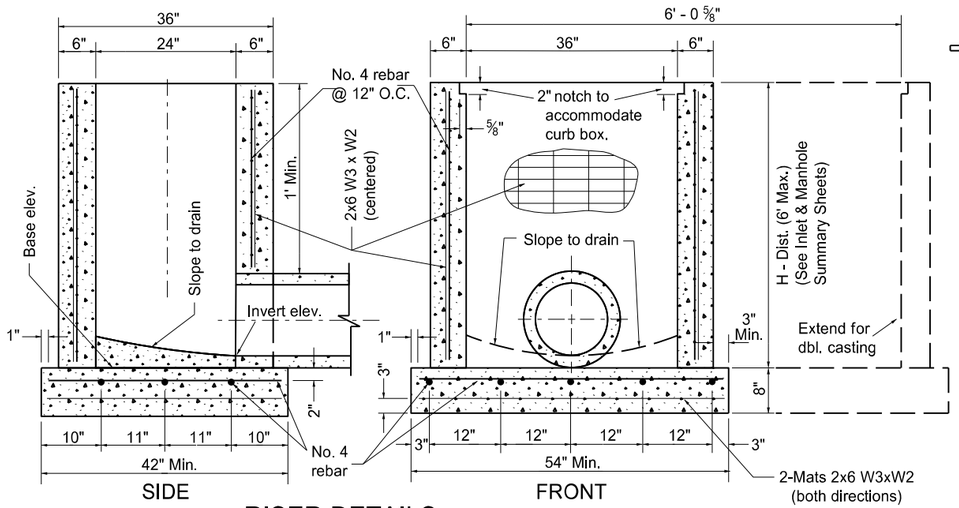

SIDE

FRONT

RISER DETAILS

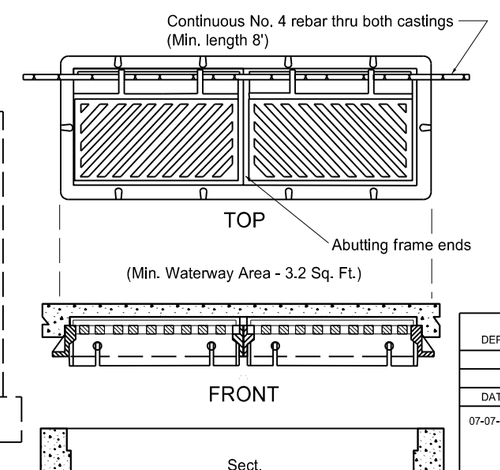

TOP

FRONT

INLET - TYPE 2 - DOUBLE

NORTH DAKOTA DEPARTMENT OF TRANSPORTATION	
05-12-14	
REVISIONS	
DATE	CHANGE
07-07-14	Revised Note 4

This document was originally issued and sealed by TERRENCE R. UDLAND Registration Number PE- 2674, on 07/07/14 and the original document is stored at the North Dakota Department of Transportation