STANDARD MONUMENTS AND RIGHT OF WAY MARKERS

D-720-1

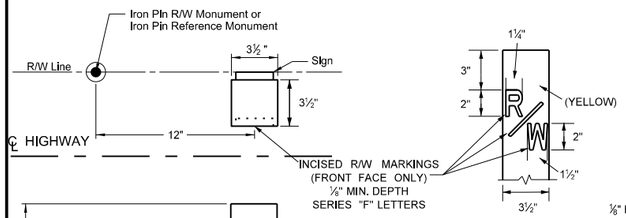

MARKING DETAIL

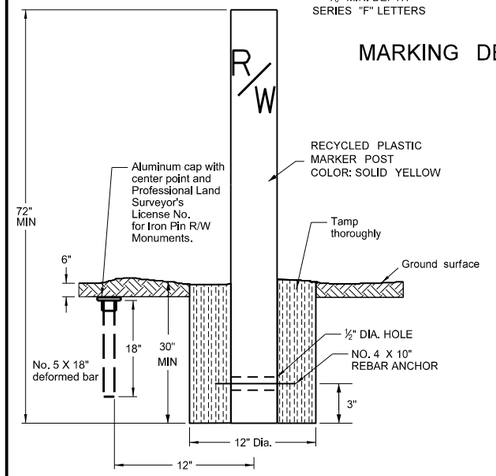

RECYCLED PLASTIC
RIGHT OF WAY MARKER
(WITNESS POST) DETAILS
&
IRON PIN REFERENCE AND R/W
MONUMENT DETAILS

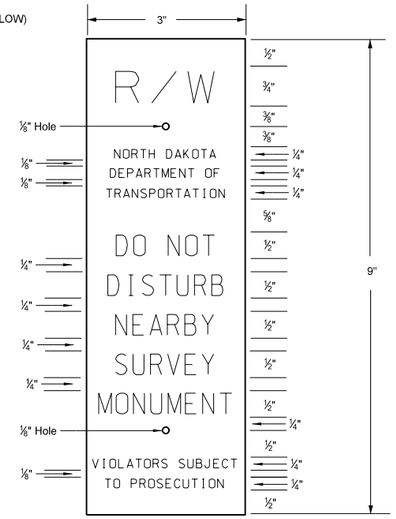

SIGN DETAIL

Black letters on orange high intensity background sheeting meeting ASTM D-4956 Type III or higher on 80 gauge 5052-H38 aluminum. Silk screen graphics. One color print. Attach sign by drilling two holes in the face of the post (side facing the private owner, away from the Department of Transportation right of way). Put inserts into the holes and mount the sign with #4 vandal proof screws. Install sign 2" from top of post.

ALIGNMENT MONUMENT DETAILS

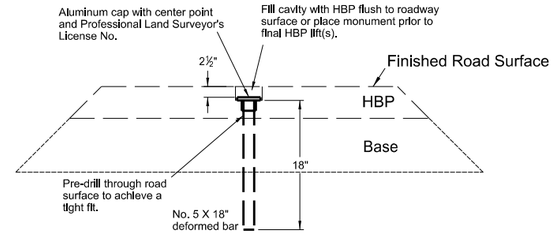

IRON PIN
(Within Finished Roadway Surface)

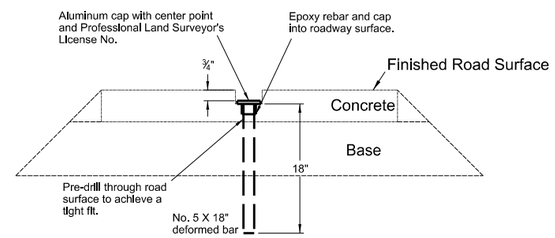

IRON PIN
(Within Finished Roadway Surface)

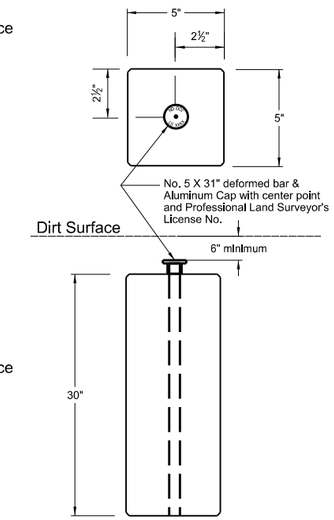

PRECAST CONCRETE
(Outside Finished Roadway Surface)
(Inside R/W Limits)

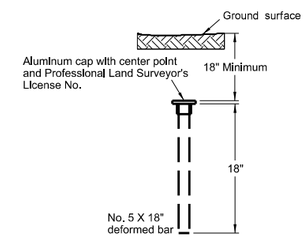

IRON PIN
(Outside Finished Roadway Surface)
(Outside R/W Limits)

NOTES:

Construct and install Alignment Monuments, Iron Pin Reference Monuments, Iron Pin R/W Monuments, and Right of Way Markers (witness posts) according to Section 720 of the Standard Specifications.

ALIGNMENT MONUMENTS: Place Iron Pin or Precast Concrete Alignment Monuments with aluminum caps on the centerline alignment PI's, section corners, quarter corners, section line crossings, quarter line crossings, and at curve points (PC's, PT's, TS's, and ST's) on the centerline.

IRON PIN R/W MONUMENT: Place Iron Pns with aluminum caps (No. 5 X 18") at breaks on the Right of Way line, and at curve points (PC's, PT's, TS's and ST's) on the Right of Way line.

IRON PIN REFERENCE MONUMENT: Place Iron Pins without aluminum caps (No. 5 X 18") as reference monuments on the Right of Way line at section corners, quarter corners, section line crossings, and quarter line crossings.

R/W MARKERS (WITNESS POST) WITHIN DRIVEWAYS: If a single iron Pin R/W or Reference Monument is within a driveway, place right of way marker (witness post) 50 feet back, in stationing, from the Iron Pin Monument along the R/W line. If R/W break is within a driveway, place right of way markers (witness posts) 50 feet back, or ahead from respective Iron Pin R/W Monuments along the R/W lines. Maintain Iron Pin R/W or Reference Monument original position within driveway.

VARIOUS MONUMENT AND MARKER PLACEMENTS

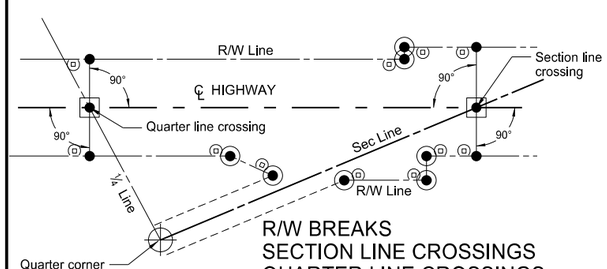

R/W BREAKS
SECTION LINE CROSSINGS
QUARTER LINE CROSSINGS

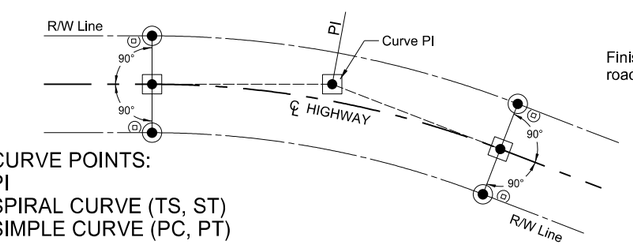

CURVE POINTS:
PI
SPIRAL CURVE (TS, ST)
SIMPLE CURVE (PC, PT)

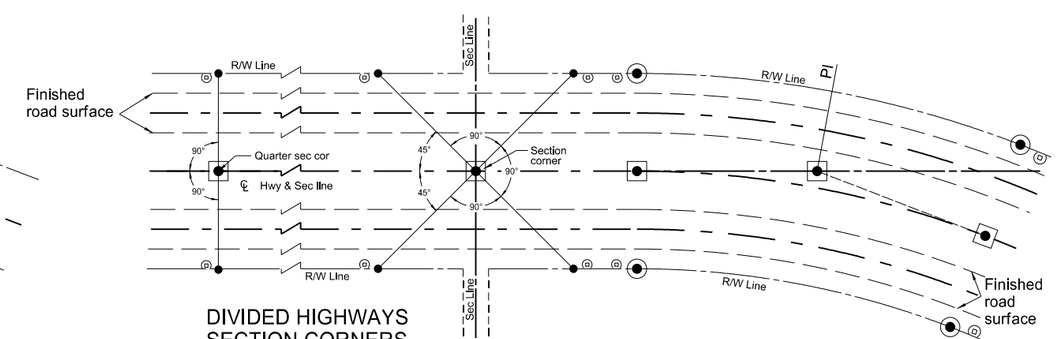

DIVIDED HIGHWAYS
SECTION CORNERS
QUARTER CORNERS

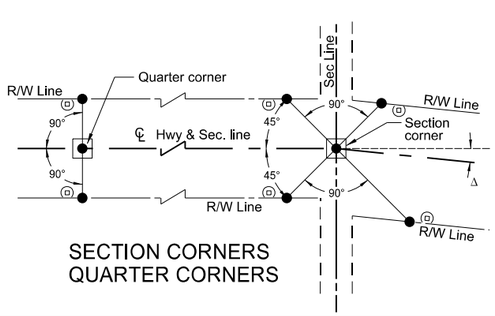

SECTION CORNERS
QUARTER CORNERS

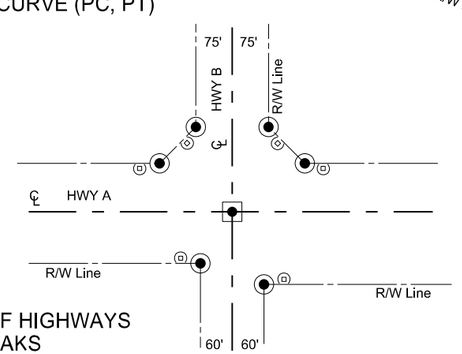

INTERSECTION OF HIGHWAYS
FLARED R/W BREAKS

LEGEND
- Iron Pin Reference Monument
- R/W Marker (witness post)
- Alignment Monument
- Iron Pin R/W Monument

NORTH DAKOTA DEPARTMENT OF TRANSPORTATION	
10-3-2013	
REVISIONS	
DATE	CHANGE
11/12/13	Note for SIGN DETAIL modified to meet ASTM D-4956 Type III or higher on 80 gauge 5052-H38
10/17/17	Updated to active voice.
08/27/19	New Design Engr PE Stamp.

This document was originally issued and sealed by Kirk J Hoff, Registration Number PE-4683, on 8/27/19 and the original document is stored at the North Dakota Department of Transportation