TRAFFIC CONTROL SYSTEM
(FOR ROADWAYS WITH 70 MPH SPEED LIMIT)
MEDIAN CROSSOVER 800 FT TRANSITION

D-704-43

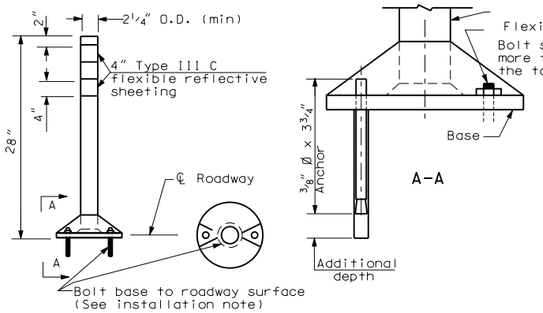

FLEXIBLE DELINEATOR DETAILS

INSTALLATION

The anchor shall be galvanized steel.

1. Using a bit whose diameter equals the anchor diameter, drill hole to the depth so that bolt can be driven below concrete surface shown.
2. Assemble anchor with nut and washer so that the top of the nut is flush with the top of the anchor. Drive anchor through material to be fastened so washer is flush with surface of material.
3. Expand anchor by tightening nut 3 to 5 turns.
4. Removal: The nut, washer and base shall be removed. The anchor shall be cut off near the pavement and the anchor driven down approximately ½". The remaining hole shall be filled with an epoxy approved by the engineer.
5. In lieu of the bolted down base the contractor may use Butyl Pad Stimsonite Corporation Pt. No. 2204-007 (black) or HB Fuller Pt. No. EP7200 (black) and EP7171 (grey) or equal.

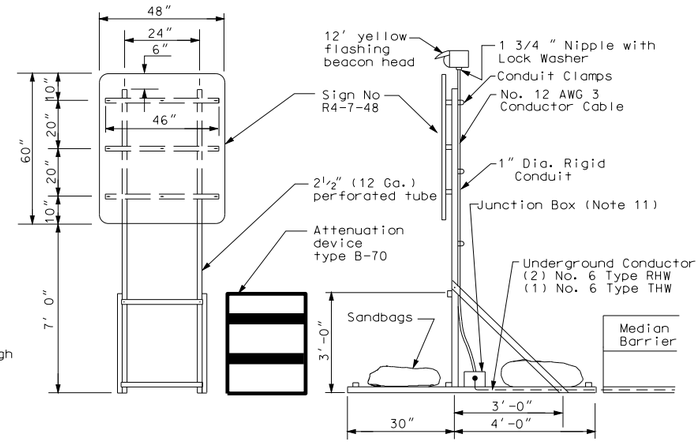

Conductor shall be placed behind barricade away from traffic and tied at each barrier connection and draped above the ground.
Between barrier and pole the conductors shall be placed a minimum of 6" underground.

DETAIL "B"

Notes

1. Variables
   S = Numerical value of, posted speed limit, or off-peak 85th percentile speed prior to work starting, or the anticipated operating speed in mph.
   W = Width of offset in feet.
   L = Taper length in feet. Speeds 40 mph or less $L=WS^2/60$. Speeds 45 mph or greater L= WS.
2. Barricade shown to be placed on roadway shall be on a moveable assembly. Sign to be mounted on barricades shall be mounted with the sign bottom on the top of the top barricade bar. Sign shown to be placed on the roadway shall be placed on moveable assemblies.
3. Delineator drums, used for tapering traffic and for tangents shall be spaced as shown.
4. Signs R4-1-48, W6-3-48 and W20-52-54 shall be installed at one mile increments and after each interchange
5. The speed limit sign shall be placed only if the crossover is over 1 mile from an interchange exit ramp.
6. Sequencing Arrow Panels
   Panels should normally be placed at the beginning of the taper. Where shoulder width does not provide sufficient room, the panel should be moved closer to the work area so that it can be placed on the roadway surface.
   Type A shall be used on roadways with slow moving traffic speeds and low volume (25 mph and 750 ADT or less)
   Type B shall be used on roadways with moderate traffic speeds and volumes (40 mph and 5000 ADT or less)
   Type C shall be used on roadways with high traffic speeds and volumes (over 40 mph and 5000 ADT)
7. Existing speed limit signs within a reduced speed zone shall be covered.
8. Obliterated or covered pavement marking shall be paid for as Obliteration of Pavement Marking. The covering shall be approved by the Engineer.
9. The contractor has the option of using portable sign supports in lieu of post mounted sign as shown on the standard drawings as specified in section 704.03 C.
10. When placing the traffic control devices, speed reductions will be necessary. These reduced speed areas shall have the "Minimum Fee $80" sign placed below the speed limit sign. The "Work Zone Speed Limit Enforced" sign in advance of the project shall be placed at the time the traffic control devices are installed.
11. Junction box shall be attached to skid or vertical brace assembly. Junction box shall be weatherproof. Size to be determined by the contractor.

PRECAST CONCRETE MEDIAN BARRIER TABLE	
Roadway ℄ to roadway ℄	Number - length of median barriers
75'	48-480'
84'	44-440'
104'	43-430'

LEGEND

E Obliteration of pavement marking (10' line, 30' skip, centerline)
F Obliteration of pavement marking (edge lines)
G Raised pavement markers (white) 5' ctrs.
H Raised pavement markers (yellow) 5' ctrs.

TYPE III BARRICADES
3 Each

FLASHING BEACON
1 Each

DELINEATOR DRUMS
25 Each

SEQUENCING ARROW PANEL TYPE C-CROSSOVER
1 Each

PORTABLE PRECAST CONCRETE MEDIAN BARRIER
See precast concrete median barrier table

ATTENUATION DEVICES
1 Each - Type B-70

RAISED PAVEMENT MARKERS
(White) 415 Each
(Yellow) 163 Each

OBLITERATION OF PAVEMENT MARKING
413 SF

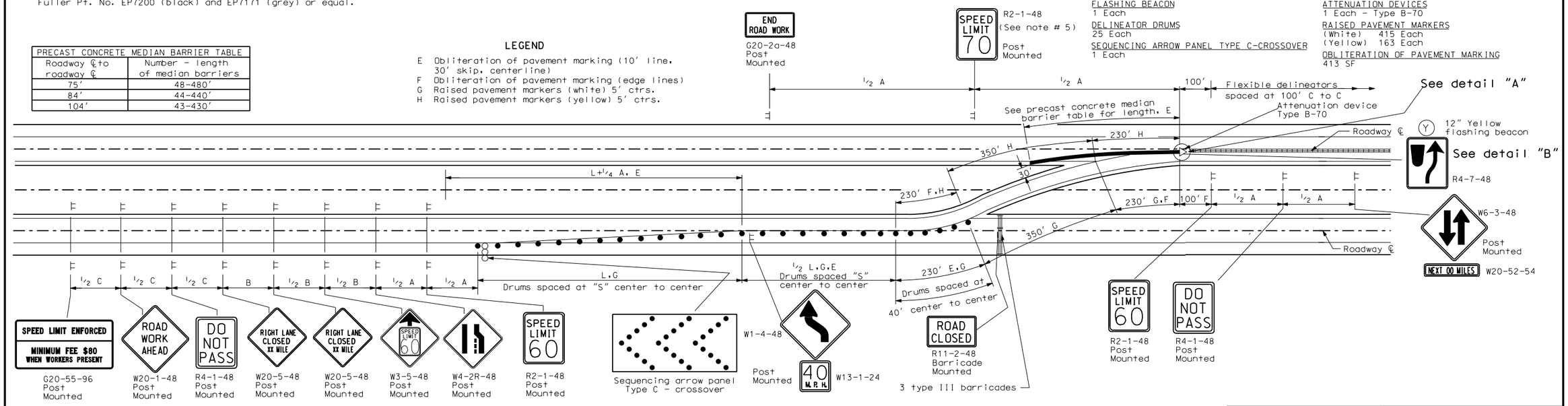

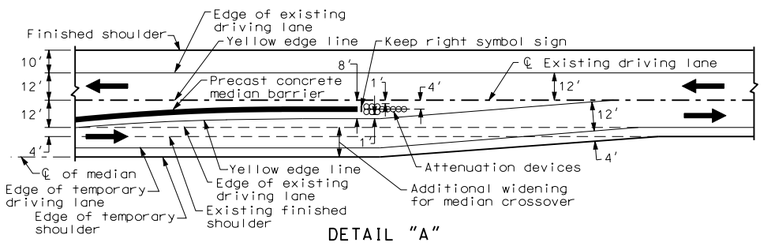

DETAIL "A"

KEY

- Type I barricade
- Type II barricade
- Type III barricade
- Sign
- Delineator drum
- Cones
- Work area
- Flagger
- Sequencing arrow panel
- Type A delineator or vertical panels back to back

ADVANCE WARNING SIGN SPACING			
Road Type	Distance Between Signs Min. (ft)		
	A	B	C
Urban - Low Speed (30 mph or less)	150	150	150
Urban - Low Speed (over 30 to 40 mph)	280	280	280
Urban - High Speed (over 40 mph to 50 mph)	360	360	360
Rural - High Speed (over 50 mph to 65 mph)	720	720	720
Urban Expressway and Freeway (55 mph to 60 mph)	850	1350	2200
Rural Expressway and Freeway (70 mph to 75 mph)	1000	1500	2640
Interstate/4-Lane Divided (Maintenance and Surveying)	750	1000	1500

NORTH DAKOTA DEPARTMENT OF TRANSPORTATION

09-03-96

REVISIONS

DATE	CHANGE
07-25-03	Revised W20-1 and minimum fee signs
04-01-04	Rev fee sign & warning sign spacing. Rev note 10
09-07-04	Revised advisory plate sign number
09-27-04	Revised sign sequence
12-01-04	PE Stamp added
06-29-05	Revised W4-2. Replaced R2-5a with W3-5. Rev. Adv. Warning Table
10-12-05	Added note 11

This document was originally issued and sealed by MARK S. GAYDOS Registration Number PE- 4518, on 10/12/05 and the original document is stored at the North Dakota Department of Transportation