DESIGN DATA				
Traffic	Average Daily			
Current 2022	Pass: 4,640	Trucks: 270	Total: 4,910	
Forecast 2042	Pass: 5,990	Trucks: 445	Total: 6,435	
Clear Zone Distance:		Design Speed: 35 mph		
Minimum Sight Dist. for Stopping: 250'		Bridges: N/A		
Limited Access Control				
Pavement Design Life 30 (years)				
Design Accumulated One-way Heavy Trucks: 5,866,100				

STATE	PROJECT NO.	PCN	SECTION NO.	SHEET NO.
ND	HEN-5-022(144)069	23691	1	1

NORTH DAKOTA
DEPARTMENT OF TRANSPORTATION

HEN-5-022(144)069

City of Dickinson, Stark County,ND
ND 22 and 8th St S Intersection

Roundabout, Lighting, Storm Sewer

GOVERNING SPECIFICATIONS	Date Published and Adopted by the North Dakota Department of Transportation
Standard Specifications	7/1/2024
Supplemental Specifications	NONE

PROJECT NUMBER \ DESCRIPTION	NET MILES	GROSS MILES
HEN-5-022(144)069	0.183	0.183

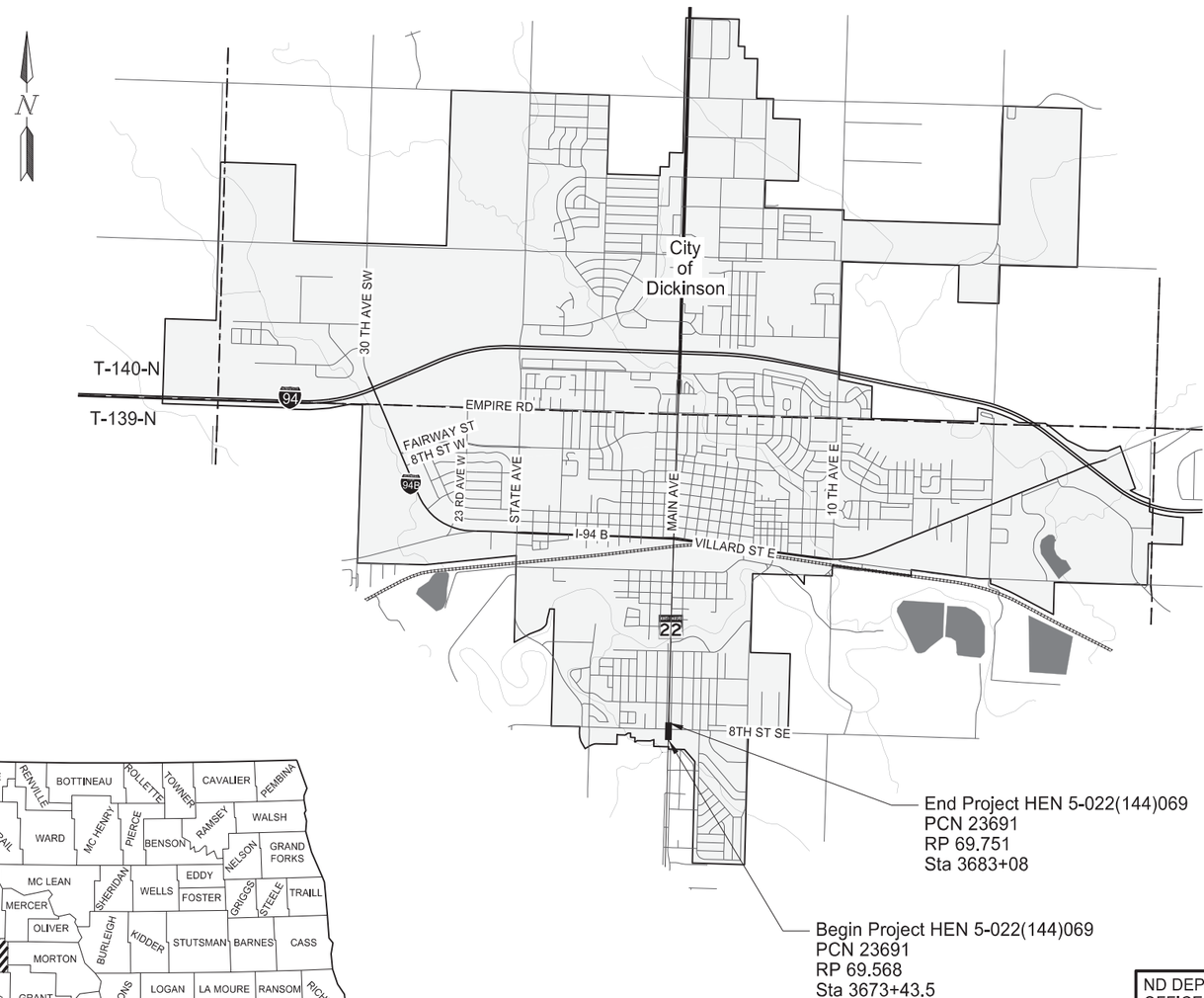

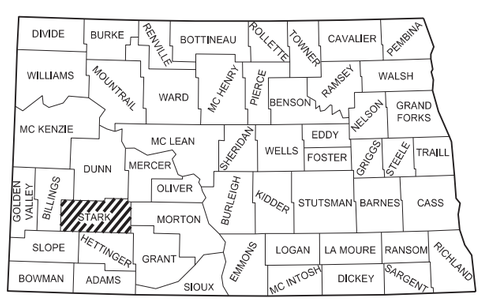

STATE COUNTY MAP

DESIGNER	Dawn Michel PE
DESIGNER	Dalton Dryburgh PE
DESIGNER	Amanda Vetter PE
DESIGNER	Jennifer Malloy PE

ND DEPARTMENT OF TRANSPORTATION
OFFICE OF PROJECT DEVELOPMENT

Jon Ketterling

Jon Ketterling 01/06/26

APEX ENGINEERING GROUP

REGISTERED PROFESSIONAL ENGINEER
JASON P GULLICKS
PE-4792
DATE
01/06/26
NORTH DAKOTA

STATE	PROJECT NO.	SECTION NO.	SHEET NO.
ND	HEN-5-022(144)069	2	1

TABLE OF CONTENTS

PLAN SECTIONS

Section	Page(s)	Description
1	1	Title Sheet
2	1 - 2	Table of Contents
4	1 - 2	Scope of Work
6	1 - 12	Notes
8	1 - 3	Quantities
10	1 - 2	Basis of Estimate
20	1 - 18	General Details
30	1 - 7	Typical Sections
40	1 - 2	Removals
50	1	Hydraulic Data
51	1	Allowable Pipe List
55	1 - 4	Drainage Layouts
57	1 - 5	Municipal (Potable Water)
60	1 - 5	Plan & Profile
75	1 - 3	Wetland Impacts
76	1 - 4	Temporary Erosion Control
77	1 - 2	Permanent Erosion Control
81	1	Survey Coordinate and Curve Data
82	1 - 8	Survey Data Layouts - Alignments
82	9	Survey Data Layouts - Monuments
82	10 - 18	Survey Data Layouts
85	1 - 8	Landscaping
90	1 - 2	Paving Layouts
100	1 - 41	Work Zone Traffic Control
110	1 - 9	Signing
120	1 - 4	Pavement Marking
140	1 - 11	Lighting
200	1 - 11	Cross Sections

SPECIAL PROVISIONS

Number	Description
SSP 1	Temporary Erosion and Sediment Best Management Practices
SP 170(24)	Utility Coordination
SP 171(24)	Contaminated Work Area
SP 172(24)	Temporary Pedestrian Facilities
SP 666(24)	Mechanically Stabilized Earth Walls
SP 675(24)	E-Ticketing (Mandatory)

TABLE OF CONTENTS

LIST OF STANDARD DRAWINGS

Number	Description
D-101-1, 2,3,4	NDDOT Abbreviations
D-101-10	NDDOT Utility Company and Organization Abbreviations
D-101-20, 21	Line Styles
D-101-30, 31,32,33	Symbols
D-101-40	Cross Section Legend
D-255-2	Erosion And Siltation Control - Erosion Control Blanket Installation
D-260-1	Erosion And Siltation Controls - Silt Fence
D-261-1	Erosion Control - Fiber Roll Placement Details
D-550-2	Longitudinal Joint Details
D-550-3	Transverse Contraction Joint Details
D-550-4	Transverse Expansion Joint Detail
D-550-5	Transverse Construction Joint
D-704-1	Attenuation Device
D-704-4	Work Zone Business Sign Details
D-704-7	Breakaway Systems For Construction Zone Signs - Perforated Tube
D-704-8	Breakaway Systems For Construction Zone Signs - U-Channel Post
D-704-9	Construction Sign Details - Terminal And Guide Signs
D-704-10	Construction Sign Details - Regulatory Signs
D-704-11, 11A	Construction Sign Details - Warning Signs
D-704-12	Shoulder Closure Tapers
D-704-13	Barricade And Channelizing Device Details
D-704-14	Construction Sign Punching And Mounting Details
D-704-15	Road Closure Layouts
D-704-24	Shoulder Closures And Bridge Painting Layouts
D-704-26	Miscellaneous Sign Layouts
D-704-50	Portable Sign Support Assembly
D-704-51	Portable Precast Concrete Median Barrier (Temporary Usage)
D-714-1	Reinforced Concrete Pipe Culverts And End Sections (Round Pipe)
D-714-22	Concrete Pipe, Cattle Pass, or Precast Concrete Box Culvert Ties
D-714-26	Transverse Mainline Pipe Installation Detail - Pipes 4 Feet or Less Below Top of Subgrade
D-714-27	Pipe Installation Detail for Longitudinal Mainline Pipe or Pipe Not Under the Roadway
D-722-1A	Inlet - Catch Basin
D-722-2	Inlet - Type 2
D-722-3	Inlet - Mountable Curb
D-722-5	Manhole Details
D-722-5A	Floating Manhole Casting
D-748-1	Curb & Gutter And Valley Gutter
D-750-1	Concrete Driveway - Urban
D-750-2	Sidewalk
D-750-3	Curb Ramp Retrofit Details
D-750-4	Curb Ramp Retrofit Transitional Area Details
D-752-2	Chain Link Fence
D-754-23	Perforated Tube Assembly Details
D-754-24, 25	Mounting Details Perforated Tube
D-754-24A	Breakaway Coupler System For Perforated Tubes
D-754-26, 27,37	Sign Punching, Stringer and Support Location Details Regulatory, Warning and Guide Signs
D-754-47, 48	Sign Punching, Stringer and Support Location Details For Variable Length Signs
D-754-57, 58	Sign Punching, Stringer and Support Location Details - Route Marker Signs
D-754-83	Object Markers - Culverts
D-762-1	Pavement Marking Message Details
D-762-4	Pavement Marking
D-762-11	Short-Term Pavement Marking
D-770-1	Concrete Foundations (Traffic Signals & Highway Lighting)
D-770-2	Feed Points (Roadway Lighting)
D-770-3	Pull Box Details
D-770-4	Lighting And Signal Details
D-770-5	Light Standard Details

STATE	PROJECT NO.	SECTION NO.	SHEET NO.
ND	HEN-5-022(144)069	4	1

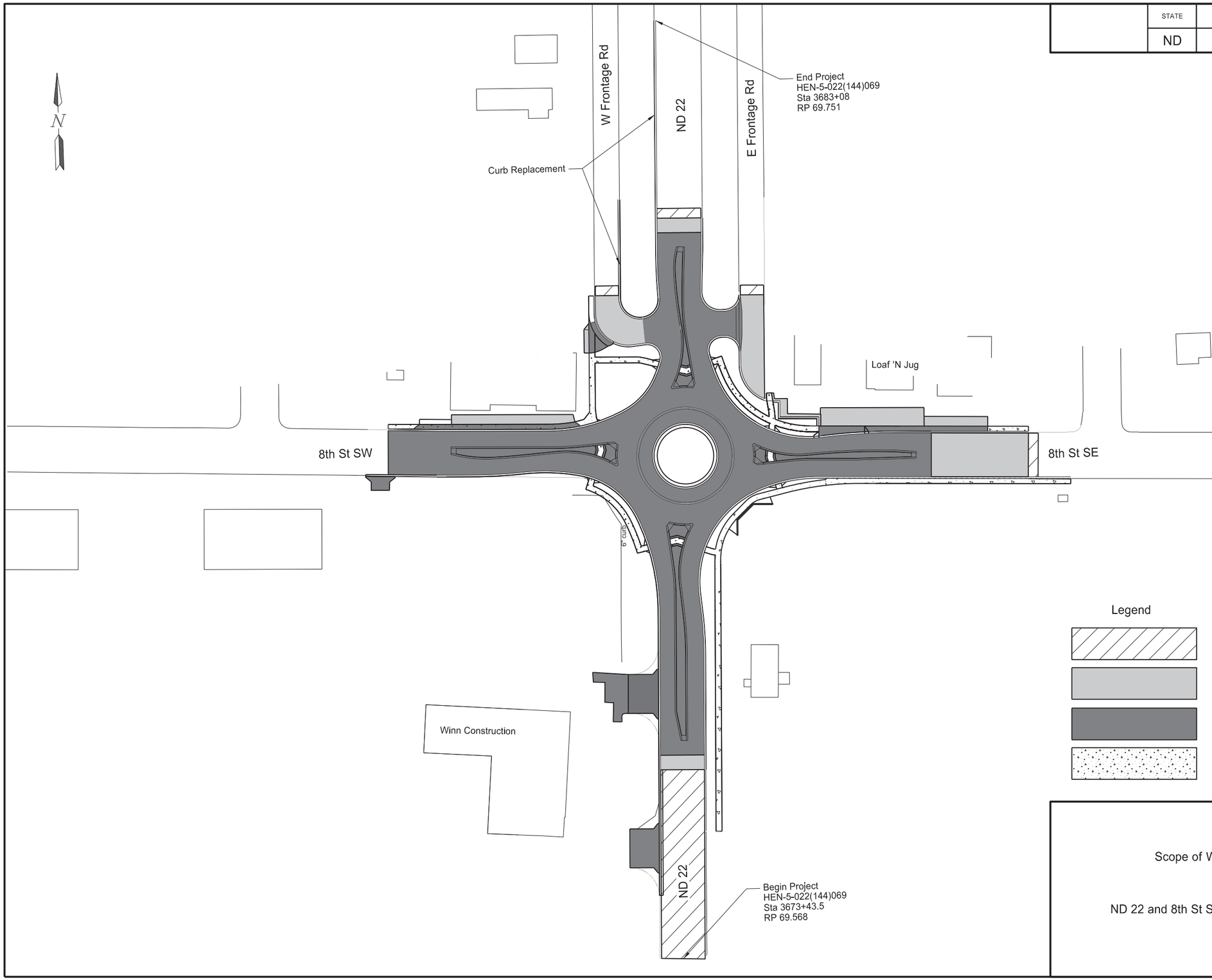

Legend

- Mill and Overlay
- HMA Reconstruction
- Concrete Reconstruction
- Sidewalks

Scope of Work

ND 22 and 8th St S Intersection

REGISTERED PROFESSIONAL ENGINEER
JASON P GULLICKS
PE-4792
DATE 2025.12.17 16:36:47 -06'00'
NORTH DAKOTA

STATE	PROJECT NO.	SECTION NO.	SHEET NO.
ND	HEN-5-022(144)069	4	2

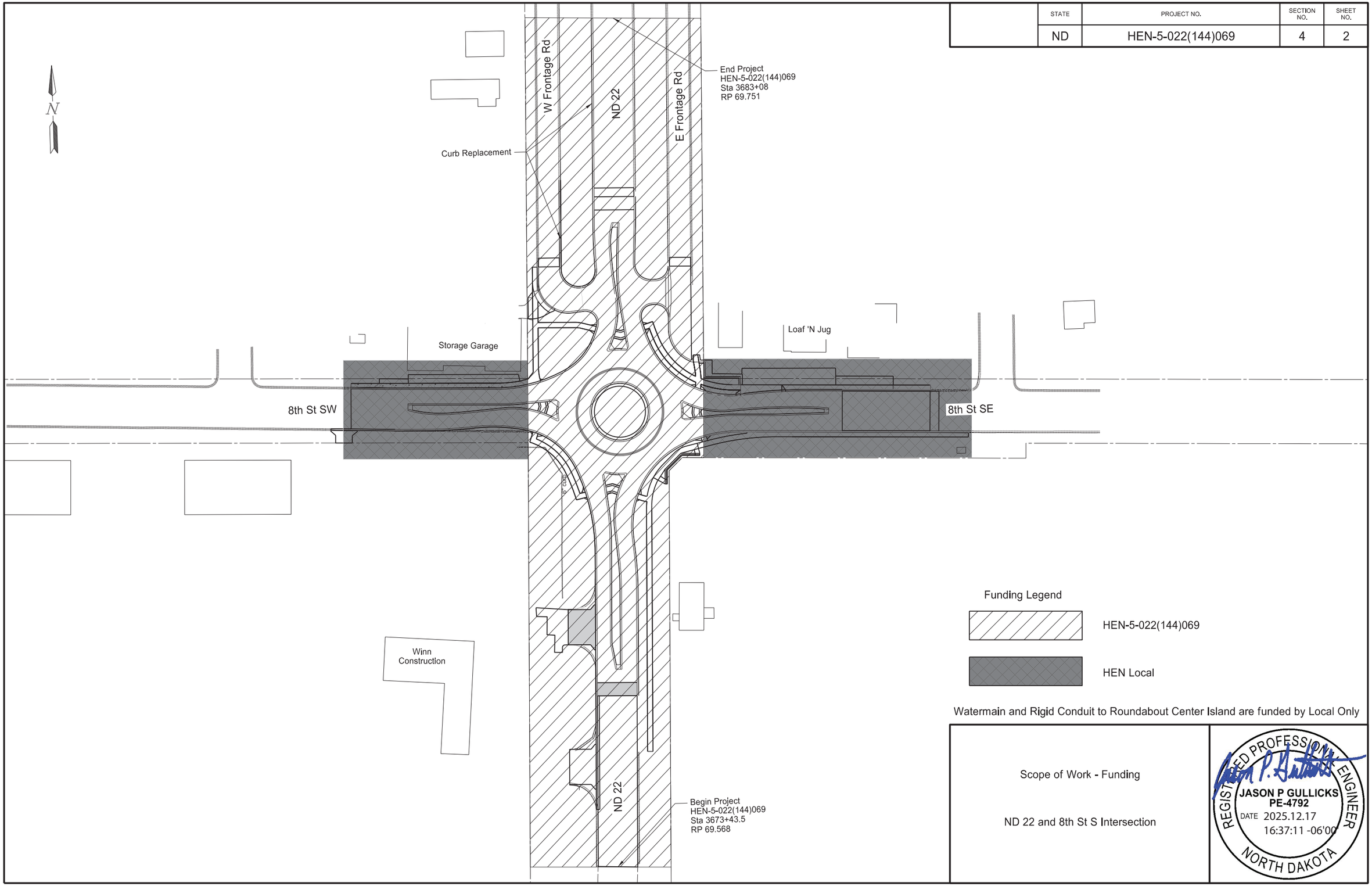

Watermain and Rigid Conduit to Roundabout Center Island are funded by Local Only

Scope of Work - Funding

ND 22 and 8th St S Intersection

REGISTERED PROFESSIONAL ENGINEER
JASON P GULLICKS
PE-4792
DATE 2025.12.17
16:37:11 -06'00'
NORTH DAKOTA

STATE	PROJECT NO.	SECTION NO.	SHEET NO.
ND	HEN-5-022(144)069	6	1

NOTES

105-110 PAVEMENT SWEEPING: Sweep paved areas that were used by construction traffic before opening these areas to public traffic.

Sweep all newly constructed pavement no more than 24 hours before a scheduled final inspection.

Use a vacuum or pick-up type sweeper to perform this work.

108-100 WEEKLY PLANNING & REPORTING MEETING: A weekly planning and reporting meeting is required.

108-150 PUBLIC RELATIONS COORDINATOR: Provide a public relations and information coordinator. The coordinator cannot be the project superintendent or construction foreman. The coordinator should be knowledgeable in construction operations, be able to develop effective media releases, possess written and verbal communication skills, and be able to organize productive meetings.

Provide the name, work address, and work phone number to the relevant project, community, and media personnel.

The public relations coordinator is responsible for providing the following:

1. Organizing, scheduling, and conducting the meeting specified in Note 108-100, "Weekly Planning/Reporting Meeting".
2. Advise Josh Skluzacek (City Engineer), from the City of Dickinson, PH: (701)456-7744, of upcoming construction activities in regard to street closures and traffic detour routes so that city police, emergency services, schools, and other pertinent city agencies may be notified.
3. Provide news releases and necessary drawings to the media before and during construction. News releases should inform the public on construction activities, schedules, street closures, width or height restrictions to traffic, and traffic detour routes. Update news releases regarding construction activities every other week, at a minimum.
4. Be available for media interviews.
5. Work directly with property owners and businesses affected by construction activities. The coordinator must have sufficient knowledge and authority to resolve property owner and business concerns regarding scheduling, maintaining access, and construction operations.

202-P01 REMOVAL OF PAVEMENT: Removal of pavement consists of removing and salvaging concrete pavement, bituminous pavement, temporary roadway bituminous pavement, sidewalks, concrete islands, valley gutters, driveways, parking lots and curb. Existing pavement thicknesses vary throughout the corridor due to patching and cross slope corrections on the roadway. All material is to be salvaged for salvage base course material.

203-010 SHRINKAGE: 30 percent additional volume is included for shrinkage in earth embankment.

203-385 AVERAGE HAUL: No average haul has been computed for this project.

203-P01 COMPACTION AND DENSITY CONTROL: Compact material for temporary and permanent roadways as specified in Section 203.04 G.2, Compaction Control, Type A.

203-P02 COMMON EXCAVATION-WASTE: Dispose excess material off site. Furnish Engineer copies of all certificates of approval and property owner agreements prior to disposal. Include all costs associated removing and disposing the excess excavation in the price bid for “Common Excavation-Waste.”

203-P03 EARTHWORK & CONSTRUCTION PHASING: Construction phasing will affect earthwork balance and haul distance. Include all costs for earthwork operations associated with construction phasing and constructing/removing temporary roadway in the price bid for “Common Excavation-Type A” and “Common Excavation-Waste.”

203-P04 TOPSOIL: Plan quantity will be used as the measurement for payment for the “Topsoil” bid item.

203-P05 MAINTENANCE OF DRAINAGE: Maintain drainage such that water does not inundate driving lanes, sidewalk, shared use path, or adjacent properties by means of temporary grading, culverts, connections to existing storm drain structures, and/or pumping. Include all costs associated with maintenance of drainage in the bid price for “Common Excavation-Type A.”

251-P01 SEEDING: Apply seeding with a seed drill. In areas were seeding is not drillable, rake seed into topsoil.

302-110 BASE COURSE: Trim base course as specified in Section 302.04 C.2, "Surface Tolerance Type B."

302-P01 AGGREGATE BASE COURSE CL 5: Aggregate Base Course CL 5 has been provided to maintain access to properties throughout the project. 200 tons provided for maintaining access to properties. Maintain a smooth driving surface at all times. Use the material as directed by the Engineer in the field.

Remove and replace aggregate as necessary for moving traffic. No additional payment for aggregate will be made to salvage and relay the material. Include all costs associated with providing, placing, maintaining, removing and replacing the material in the price bid for “Aggregate Base Course CL 5”.

REGISTERED PROFESSIONAL ENGINEER
JASON P GULLICKS
PE-4792
DATE 2025.12.17 17:24:29 -06'00'
NORTH DAKOTA

NOTES

550-P01 NON-REINF CONCRETE PVMT CL AE-DOWELED-COLORED AND NON-REINF CONCRETE PVMT CL AE-DOWELED-COLORED-TEXT: Develop a mix design per Section 550 of the Standard Specifications. Provide a pigment from the list below or provide an approved equal. To be considered an approved equal, pigments must meet the requirements of ASTM C 979.

1. Number 920 Onyx Black, produced by Soloman Colors, Inc. http://www.solomoncolors.com/

Use the same supplier for all colored concrete placed under the contract. Provide the engineer a color sample prior to placing on the project.

Add pigment at the ratio recommended by the manufacturer directly into the mixer along with the aggregate, cement, and water. Add pigment while the mixer is operating at mixing speed. Continue mixing for 5 to 10 minutes or between 50 and 100 revolutions.

For “Non-Reinf Concrete Pvmt CL AE-Doweled-Colored-Text” form a pattern in the concrete using a roller to create an Ashlar Slate pattern.

Cure concrete using curing compound that meets the requirements of ASTM C 309, Type 1.

Include all costs in the price bid for “Non-Reinf Concrete Pvmt CL AE-Doweled-Colored” or “Non-Reinf Concrete Pvmt CL AE-Doweled-Colored-Text.”

550-P02 STORM SEWER CASTINGS: Install storm sewer castings while the concrete is still in a plastic state and in a manner that does not create additional joints in the pavement, which were not part of the designed joint layout.

Install inlet castings that are adjacent to the concrete roadway concurrently with the driving surface paving operation.

Install manhole castings that lie within the limits of the concrete pavement with the paving operation. Install castings 1/4 inch to 3/8 inch below the finished pavement surface.

Include all costs for this work in the price bid for the concrete paving items.

550-P03 CONCRETE PAVEMENT: Install manhole and valve box castings with the paving operation or with each adjoining full concrete panel. Isolation or box outs will not be allowed.

704-100 TRAFFIC CONTROL SUPERVISOR: Provide a Traffic Control Supervisor.

704-200 STATE FURNISHED MEDIAN BARRIER: Obtain (23) 2.5’ x 10’ concrete barriers. They can be picked up and returned to the Belfield yard at 801 1st Ave NE in Belfield ND 58622. Contact the Dickinson District office at 701-227-6500 to facilitate the exchanges.

Section 704.04 J “Precast Concrete Median Barrier (State Furnished)” applies to the contract item “State Furnished Median Barrier”.

If returning barriers with connection components, coordinate the delivery location for the connecting components with the Engineer. Some 4 inch x 4 inch boards are available at the return location. Provide any additional 4 inch x 4 inch boards necessary to stack barriers. The boards will become property of the Department.

Include all costs associated with median barriers in the contract unit price for “State Furnished Median Barrier”.

704-P01 TRAFFIC CONTROL PHASING: Refer to Section 100 for construction phasing and work zone traffic control layouts. The traffic control plans have been developed based on the premise that the project will be constructed in five (5) phases. Include all costs to remove and reset traffic control devices in the price bid for individual items. Submit traffic control adjustments due to deviations from the listed assumptions for approval prior to implementation.

Throughout construction duration, the following stipulations are to be followed within all applicable phases:

- Maintain two-way traffic flow along ND 22 and 8th Street SW.
- At least one access point to the Loaf N’ Jug station must remain open. This access must allow delivery trucks to pass through unimpeded.
- Maintain access to Southview Liquors. Construct driveway in phases to provide continuous access. If access is not maintain access at current driveway location, construct access from 1st Ave SE to the Southview Liquors per direction of Southview Liquors property owner. Contractor responsible for all access construction costs from 1st Ave SE, including removal and property restoration.
- Maintain access to either the alley on the west side or the driveway on the northeast corner of the storage units at 25 8th Street SW. When driving access will not be available to the south doors of the storage units, notify property owner 5 days prior so the property owner can coordinate with tenants.
- Maintain access to at least one access to Winn Construction along ND 22.

Phase 1:

Phase 1 consists of a work zone to install storm sewer that is out of the roadway core and to construct the temporary bypasses. Traffic will utilize the existing roadways.

REGISTERED PROFESSIONAL ENGINEER
JASON P GULLICKS
PE-4792
DATE 2025.12.17 17:24:51 -06'00'
NORTH DAKOTA

NOTES

Phase 2:
Phase 2 consists of a work zone to construct the main roundabout circle, ND 22 north leg, east ND 22 frontage road, and other available portions of the roundabout legs. Install storm sewer within these areas. Traffic will utilize the temporary bypasses.

Phase 3:
Phase 3 consists of a work zone to continue construction on the roundabout, construct the eastern portion of the 8th Street east roundabout leg and the pavement where the northern 8th Street temporary bypass crossed ND 22 in Phase 2. Install storm sewer within these areas. Traffic will utilize the temporary bypasses and the east ND 22 frontage road that was completed in Phase 2.

Phase 4:
Phase 4 consists of a work zone to construct the remainder of the 8th Street west roundabout leg and west ND 22 frontage road. Complete any remaining storm sewer during this phase. Traffic will utilize the newly constructed portions of the roundabout as well as the southern 8th Street temporary bypass west of ND 22.

Phase 5:
Phase 5 consists of a work zone to construct the curb that was left out from previous phases for the temporary bypass crossings of ND 22 as well as the removal of the remaining temporary bypasses. Traffic will utilize the newly constructed roundabout and roadways.

Asphalt Tie-ins:
Complete the asphalt paving tie-ins surrounding the roundabout using flagger-controlled work zone. Traffic control will be determined by a Contractor supplied operation plan as approved by the Engineer. Flagging hours and necessary signs for a flagging operation have been included in the quantities.

704-P02 TRAFFIC CONTROL DEVICES: The traffic control devices list for each phase has been developed using traffic control sign layouts (shown in Section 100) and Standard Drawings as listed below:

- D-704-04 Work Zone Business Sign Detail
- D-704-15 Type A, Temporary Road Closure
- D-704-24 Type R & S, Shoulder Work
- D-704-26 Type BB & EE

704-P03 ROUTE MARKERS/STREET NAME SIGNS: Temporarily display route marker signs and street name signs during construction until they can be permanently installed. Existing signs can be utilized as temporary signs. Include all costs to furnish, install, maintain, relocate, replace, and remove the temporary signs in the price bid for "Traffic Control Signs."

704-P04 ATTENUATION DEVICE SPECIAL: Install the liquid filled attenuation device described in this note.

All attenuation devices shown as "XX MPH Attenuation Device Special" must be liquid filled attenuation devices.

Install liquid filled attenuation devices that are 2.5 feet wide.

Before installing devices, provide the Engineer a Certificate of Compliance stating that the devices meet NCHRP Report 350, MASH 2009, or MASH 2016, and a copy of an eligibility letter from FHWA.

Use devices rated for the MPH designation used in the item description.

Install devices according to the manufacturer's specifications.

Liquid filled attenuators may not be deployed in any portion of the months of January, February, and December, nor before the 15th of March.

If liquid filled attenuation devices are deployed after the 15th of March or in any portion of the months of April, October or November, include calcium magnesium acetate or potassium acetate in the liquid filled barrier solution. Mix the anti-icing chemicals with water as recommended by the anti-icing chemical manufacturer to protect the barrier from freezing to a temperature of 0°F. Contact the Engineer and the NDDOT Environmental and Transportation Services Division in the case of a spill leaving the roadway. Dispose of the mixture inside the device as specified in Section 107.17, "Removed Material".

Provide a full replacement set of attenuators available to the project. If the replacement devices are installed, have a set of replacement devices available to the project within 3 calendar days.

Immediately replace any damaged pieces. The Department will reimburse the Contractor for damaged pieces based on the invoice price plus 10 percent. All other costs associated with installing and maintaining.

706-P01 FIELD OFFICE: Provide a field office which meets the following requirements:

1. Minimum total area of 440 square feet
2. Indoor bathroom facilities with weekly cleaning services
3. Hookups for heat, electricity, sewer, and potable water
4. Minimum cabinet space of 32 cubic feet
5. Minimum counter space of 40 square feet
6. A heating and cooling system that is capable of maintaining the temperature between 65°F and 78°F
7. Lighting with a minimum of 110 foot-candles
8. DSL broadband internet and a router that broadcasts Wi-Fi and will allow for hard wiring of a computer

REGISTERED PROFESSIONAL ENGINEER
JASON P GULLICKS
PE-4792
DATE 2025.12.17 17:25:07 -06'00'
NORTH DAKOTA

NOTES

9. Photocopy/Printer with scanning capabilities capable of 11x17 photocopies and toner to last the duration of the project. Other features to include digital copying and scanning. Provide a copier/printer machine with operating software compatible with that used by the NDDOT.
10. Supply a photocopier with enough toner to last the length of the project and with the following capabilities:
    a. Printing;
    b. Scanning; and
    c. Producing 11 x 17 photocopies and prints.

Place the field office on the project, or as close to the project as possible. The Contractor is responsible for the pay for the following:

- Rental fees
- Cleaning service
- Heating
- Electrical
- Sewer
- Potable water
- Internet/router service
- Furnishing office equipment
- Supply white 8.5” x 11” and 11”x17” paper for duration of project

708-P01 INLET PROTECTION-SPECIAL**:** Furnish, install, maintain (clean), and remove drainage inlet filter assemblies to collect sediment in surface storm water runoff. Dispose of debris or silt that has accumulated in the bag at a landfill or as approved by the Engineer.

Provide Wimco, Lange IPD, Flexstorm, or Dandy CurbSack. Keep filter in place until after the graded surfaces are stabilized and the surrounding street is clean of debris. Include all costs related to the furnishing, installation, maintenance, replacement of damaged devices, and removal in the price bid for "Inlet Protection-Special".

722-P01 ADJUST SPRINKLER SYSTEM: At approximately Sta 3674+80 to 3678+40 Lt, remove sprinkler system to construction limits. Prior to pouring new concrete driveway areas, extend sprinkler lines to outside of new concrete driveway areas and plug for future use. Include all costs for work and materials in the price bid for “Adjust Sprinkler System”.

750-P01 PIGMENTED IMPRINTED CONCRETE: Develop a mix design using any size coarse aggregate specified in Section 802.02 B.2, "Aggregate Gradation" and with a 60-40 fine aggregate-coarse aggregate ratio.

Provide a pigment from the list below or provide an approved equal. To be considered an approved equal, pigments must meet the requirements of ASTM C 979.

1. Number 920 Onyx Black, produced by Soloman Colors, Inc. http://www.solomoncolors.com/

Form a pattern in the concrete using a roller to create an Ashlar Slate pattern.

Use the same supplier for all colored concrete placed under the contract. Provide the Engineer a color sample and up to two 4’x4’ test panels for each color and pattern selection prior to placing on the project.

Add pigment at the ratio recommended by the manufacturer directly into the mixer along with the aggregate, cement, and water. Add pigment while the mixer is operating at mixing speed. Continue mixing for 5 to 10 minutes or between 50 and 100 revolutions.

Cure concrete using curing compound that meets the requirements of ASTM C 309, Type 1.

Include all costs in the price bid for “Pigmented Imprinted Concrete.”

762-050 PAVEMENT MARKING: If the Engineer and Contractor agree, plan quantity will be used as the measurement for payment for pavement marking items.

762-P01 TEMPORARY PAVEMENT MARKING: Install temporary pavement markings if weather conditions do not allow for the installation of the permanent markings. Place temporary painted markings in the same location as the permanent markings, as the grooving will remove the painted markings. Temporary pavement marking on pavement will not be paid separately. Include all costs for furnishing materials, equipment, labor, and incidentals in the contract unit price of the associated pavement marking item.

REGISTERED PROFESSIONAL ENGINEER
JASON P GULLICKS
PE-4792
DATE 2025.12.17 17:25:28 -06'00'
NORTH DAKOTA

NOTES

714-P01 STORMWATER MANAGEMENT: Manage all stormwater systems for the duration of the project. This includes but is not limited to phasing or optimizing the storm sewer removals and installation to maintain storm sewer drainage. If temporary storm sewer connections are unable to be completed, then pumping of stormwater from existing to proposed drainage structures will be allowed, provided that traffic is not impacted. Submit a stormwater management plan to the Engineer before the start of the project. The plan must include the following:

- Phasing of removal and installation of storm sewer
- Location, duration, and type of anticipated pumping required
- Erosion and sediment controls
- Flow controls
- Anticipated inspection frequency
- Any other details relating to the management of stormwater needed for the duration of the project

Include all stormwater management costs in the price bid for “PIPE CONDUIT (__)IN – STORM DRAIN”.

714-P02 CONCRETE PIPE JOINTS: Tie all joints on reinforced concrete pipe runs from drainage structure (i.e. inlet, manhole, etc.) to end section.

714-P03 PIPE CONDUIT (_)IN -STORM DRAIN: All pipe dimensions shown on the plans are from center of structure to center of structure. Payment will be made for the installed length of pipe rounded to the nearest foot.

722-P01 INLETS AND MANHOLES: Inlets and manholes were designed with a minimum 4 foot riser height, unless noted otherwise in Section 50. Fill the bottom of the inlet or manhole with concrete up to the lowest invert elevation. Place and shape the concrete fill to form an invert to eliminate trapping of debris and/or sediment.

722-P02 INLET CATCH BASIN 6 IN BEEHIVE: Construct concrete collar around specified catch basins as shown in Section 20. Include the cost of material, equipment, labor and incidentals to install concrete collar in the price bid for “Inlet Catch Basin- 6 IN BEEHIVE”

722-P03 CASTINGS: Provide floating manhole castings for all new or existing manholes that lie within the limits of new concrete roadway. Position castings to avoid falling within a wheel path. Place flush all castings to within 1/8 inch below the pavement that lie in the roadway.

722-P04 ADJUST MANHOLE: Adjust by raising or lowering the casting with adjustment rings to finish grade. Provide floating manhole castings for existing manholes within concrete areas. Field verify grades, structure configuration, and dimensions prior to adjustment work.

REGISTERED PROFESSIONAL ENGINEER
LEVI L CLAGETT
PE-40749
DATE 2025.12.18 08:02:36-06'00'
NORTH DAKOTA

NOTES

202-P01 REMOVAL OF ALL PIPE ALL TYPES AND SIZES:
Remove without damage and salvage cast iron pipe, caps, plugs, PVC pipe and fittings. Allow City to inspect removed items to determine if they are to be salvaged and delivered to the City. Deliver all items to the City of Dickinson Public Works at 3411 Public Works Boulevard.

202-P02 ACP WATERMAIN REMOVAL:
Asbestos Cement Pipe Removal:
Asbestos Cement Pipe (ACP) to be removed according to North Dakota Department of Environmental Quality requirements. Before removal, the ACP must be inspected by a certified asbestos inspector to determine the condition. A list of current licensed asbestos inspectors in North Dakota can be found at:
https://deq.nd.gov/publications/WM/Asbestos/AsbestosContractors.pdf

The ACP must be removed by a licensed contractor and individuals certified to do asbestos abatement. This material must be removed in accordance with North Dakota Air Pollution Control Rules. A list of licensed asbestos contractors can be found at
https://deq.nd.gov/forms/WM/asbestos/SFN17987.pdf

ACP must be disposed of at an approved landfill and is prohibited from being recycled. ACP that is in a friable condition or removed by mechanical methods must be wrapped and labeled with asbestos warning labels, along with generator information labels. After disposal, a waste shipment record must be sent to the NDDEQ within 10 days. A copy shall be supplied to the engineer. A copy of the waste shipment record can be found at
https://deq.nd.gov/forms/WM/asbestos/SFN58174.pdf

OSHA rules apply to the removal of ACP. More information on NDDEQ requirements can be found here: https://deq.nd.gov/publications/WM/Asbestos/AsbestosCementPipe.pdf

Include all costs associated with coordination, applications, handling, transporting and handling and disposal of AC pipe in the unit price bid for “ACP Watermain Removal”

724-P01 CITY OF DICKINSON UTILITY GOVERNING SPECIFICATIONS: City of Dickinson utility specifications not covered herein are governed by: Standard Technical Specifications and Standard Detail Drawings for Municipal Public Works Improvements City of Dickinson, December 2017 as Periodically Updated and Supplemented by Contract Documents. A copy of the City of Dickinson Utility Governing Specifications can be found at the City of Dickinson website: http://www.dickinsongov.com/

724-P02 WATERMAIN GENERAL: Notify the City of Dickinson of any loss of service of a fire hydrant or ability to use a fire hydrant one day before the occurrence. Provide notification when hydrant is back in service. Existing gate valves can only be operated by City of Dickinson representatives. Operate newly installed valves until the project is accepted. Existing valves may not close tight enough to get a watertight closure. Prepare to complete work without a total water shut off. Provide 24-hour notice for any shutdowns of existing lines with the City of Dickinson Water Utility Department (701)-456-7979.

All materials that may come into contact with water intended for use in a public water system meet the American National Standards Institute (ANSI)/National Sanitation Foundation (NSF) International Standard 61. A product will be considered as meeting this standard if so certified by NSF, the underwriter’s laboratories, or other organizations accredited by ANSI to test and certify such products.

724-P03 WATERMAIN:
Polyvinyl Chloride Pipe: Polyvinyl Chloride Pipe shall meet the requirements of AWWA C900 or C905, or the latest revision thereof, and shall be furnished in Cast Iron Pipe equivalent outside diameters with elastomeric joints. Pressure rating shall be 235 psi (DR18). All water main fittings shall be ductile iron.

Mechanical Joints: shall be manufactured in accordance with AWWA/ANSI C111/A21.11.

Mechanical Joint Bolt Requirements: Bolts for mechanical joint fittings, valves, and hydrants shall be alternated with one-half stainless steel and one-half low alloy steel. Low alloy steel bolts shall contain a maximum content of carbon at 0.2 percent, manganese at 1.25 percent, sulphur at 0.5 percent, minimum content of nickel at 0.25 percent, and a combined content of nickel, copper, and chromium at 1.25 percent. Stainless steel bolts shall be Grade 304.

Restrained pipe joints shall be required where shown on the plans. Joint restraint systems shall be approved by the Engineer.

Pipe Coupling: ASTM A283 Grade C Steel with fusion-bonded epoxy coating and stainless steel nuts and bolts.
12” & Smaller: Romac MACRO HP or approved equal.
Larger than 12”: Ford, Dresser, Mueller, Hymax, or approved equal.

Polyethylene Pipe: HDPE 4710 conforming to ASTM D2239, DR-9 (IPS) with a pressure rating of 250 psi.

Copper Tubing: Type K meeting ASTM B-88. All fittings for copper lines shall be compression.

Service Connection: Double bolt, stainless steel. All fittings shall be red brass (no lead brass). All corporations and curb stops shall be ball style valves.

Polyethylene Encasements: All ductile iron and cast iron pipe, valves, valves boxes, fittings, couplings and hydrants shall be encased with 8-mil linear low- density (LLD) polyethylene film in accordance with ANSI/AWWA C105/A21.5.

Markers: At each water stubout, Contractor shall furnish a 4-inch by 4-inch wood marker, extending a minimum of 2 feet above finish grade, painted blue.

Examination: Verify that connection sizes, locations, and inverts are as indicated.

Notify utility companies before digging. Verify all related work is at appropriate stage of completion. Before any City watermain is cut, measure the outside diameter (O.D.) of the pipe with an

REGISTERED PROFESSIONAL ENGINEER
SCOTT M. SCHNEIDER
PE-5347
DATE 2025.12.18 08:27:42-07'00'
NORTH DAKOTA

NOTES

O.D. tape to make sure contractor has the correct fittings to complete the job. The contractor shall be responsible for any damages or delays caused by not having the correct fittings available.

Preparation: Cut pipe ends square, ream pipe and tube ends to full pipe diameter, remove burrs. Remove scale and dirt on inside and outside before assembly. Prepare pipe connections to equipment with flanges or unions.

Marking Tape: Install marking tape located 2 feet above the top of all water mains installed under this contract. Provide a tape with a non-detectable type with a minimum width of 5 inches, that is blue in color with the words “CAUTION WATER LINE BELOW” imprinted on the tape in black capital letters, and equal to that manufactured by Presco standard grade. Provide for all costs associated with the installation in the price bid for “Watermain (_)IN PVC”.

Utility Crossings: Separation between water and sanitary sewer piping shall be provided as follows: Provide a minimum horizontal separation of 10 feet measured from edge of water pipe to edge of sanitary sewer pipe. Provide a minimum vertical separation of 18 inches measured from edge of water pipe to edge of sanitary sewer pipe.
At all crossings, both water pipe and sanitary sewer pipe shall be installed with a full pipe section centered over a full pipe section. Sewer joints shall be installed equidistant and as far as possible from water pipe joints. Where water pipe crosses under a sewer, adequate structural support shall be provided for the sewer to maintain line and grade. Minimum separation between water and sanitary sewer lines shall be 18 inches at all crossings, whether water is over or under sewer.

If it is impossible to obtain proper horizontal and vertical separation as stipulated above, reviewing agency approval must be obtained on a case by case basis to utilize one of the following methods: Sanitary sewer shall be designed and constructed to water pipe standards, and shall be pressure tested at 150 psi for a period of one hour to assure water tightness. Either the water main or the sewer line may be encased in a watertight carrier pipe which extends 10 feet on both sides of the crossing, measured perpendicular to the water main. The carrier pipe shall be of materials specified for use in water main construction.

Installation - Pipe: Establish elevations of buried piping to ensure not less than 7'-6" ft of cover to crown. See plans for invert elevations. Install pipe to indicated elevation to within tolerance of 1/2 inches (13 mm). Route pipe in straight line. Joint deflections shall not exceed manufacturers recommendations.

Install pipe to allow for expansion and contraction without stressing pipe or joints. Install insulation where indicated on the plans. Slope water pipe and position drains at low points.

Field Quality Control: Hydrostatically test all pressure pipe in the presence of Engineer at a minimum pressure of 150 psi for a period of no less than 2 hours as required by AWWA Section C605-05, Section 7, with pipe section being tested to maintain pressure within 5 PSI of the specified hydrostatic test pressure. Determine allowable leakage per hour by the following equation:

$$Q = \frac{LD\sqrt{P}}{148{,}000}$$

Where:
Q = allowable leakage (gals/hr.)
L = length of test section (ft)
D = pipe diameter in inches (in)
P = average test pressure (psi)

Remove all air prior to beginning of test. Obtain Engineer’s approval of testing equipment. Equipment, at a minimum, must consist of a volumetrically calibrated water tank with cover, oil filled pressure gage graduated in feet of water or psi, flexible hoses, leak free valves and gas driven pump with capability to develop 200 psi of discharge pressure. If leakage is greater than allowable, take immediate action to correct the problem(s) and retest the section until leakage limits are met. If a new section of pipe is connected to an existing main or to a service connection, take appropriate action to prevent damage to the existing main. This may include temporary capping and blocking and leaving trench open for visual leakage inspection by Engineer.

Flush in the presence of Engineer to the approval of Engineer immediately after completion of pressure test. Flush away from existing mains or services. Water for flushing furnished by the City.

Cleanup And Project Closeout: Verify all valve and curb boxes have been raised to grade.

Measurement: Measure water main and service lines by the linear foot (LF) as installed and accepted by the Engineer. Bedding, thrust blocking and other miscellaneous items such as gaskets, lubricant and other special requirements are included in the unit price for pipe and fittings and will not be measured.

724-P04 CONNECTION TO EXISTING MAIN:
Prior to making any connection to an existing City watermain, the Contractor shall coordinate with the City of Dickinson. The connection shall include dewatering, cutting of existing pipe for connection and preparation of existing pipe for connection.

Include all costs associated with coordination and connection to existing main in the unit price bid for “Connection to Existing Main.”

724-P05 DUCTILE IRON FITTINGS: Ductile Iron fittings shall be manufactured by Harco, Trinity Valley, or approved equal, and shall have a working pressure of 350 pounds per square inch conforming with AWWA/ANSI C153/A21.53 or AWWA/ANSI C110/A21.10. All Ductile Iron fittings shall be cement mortar

REGISTERED PROFESSIONAL ENGINEER
SCOTT M. SCHNEIDER
PE-5347
DATE 2025.12.18 08:27:54-07'00'
NORTH DAKOTA

NOTES

lined and contain an exterior bituminous seal conforming with AWWA/ANSI C104/A21.4. All fittings shall be mechanically restrained and have thrust blocking. Thrust blocking shall be of adequate size to prevent movement of pipe and appurtenances when under pressure. Minimum bearing area shall be 2 square feet.

Mechanical joints shall be manufactured in accordance with AWWA/ANSI C111/A21.11.

Water main fittings will be measured by the pound per the Fittings Table in Section 57 without joint accessories or cement lining. Fitting weights for additional required fittings not listed on the Fittings Table will be per ANSI/AWWA C110/A21.10. Include all costs associated with ductile iron fittings in the unit price bid for “Fittings – Ductile Iron.”

724-P06 GATE VALVE AND GATE VALVE BOX:
Gate Valves: Manufacturer's name and pressure rating marked on valve body.
The gate valve furnished shall be of a quality equal to that manufactured by American Flow Control under the minimum requirements in design, material, and workmanship conforming to the latest AWWA Standard C515.

The metals used shall be in accordance with AWWA and ASTM Standards.
Unless otherwise designated, all gate valves shall have a non-rising stem, O-ring stem seals, 2-inch operating nuts, and open counterclockwise.

The gate valve shall have a resilient synthetic rubber coating seat attached to the wedge, manufactured and designed in accordance with the latest AWWA Standard C515. Resilient-Seated Gate Valve body and bonnet shall be coated, inside and out, with a fusion bonded epoxy in accordance with AWWA C550. The waterway shall have a full unobstructed flow without recesses in the bottom. All bonnet bolts shall be stainless steel. All gate valves 16-inch and larger shall be equipped with a bevel gear actuator. All gate valves shall be equipped with a gate valve box adapter as manufactured by “Adaptor Inc.” or approved equal. Adapter shall be included with the gate valve.

Valve Boxes: The valve boxes furnished shall be of a quality equal to that manufactured by Tyler Pipe Model 6860 or Star Pipe Products Cast Iron Heavy Duty Model "G" with bases and dimensions of each section to be as follows: No. 6 round base for 24-inch and smaller gate valves. Cover shall be marked "WATER" on all valves, including valves on hydrant leads, except for fire service lines to buildings, which shall be marked “FIRE”.

Top Section 25 1/2 inches long. Extension pieces as required. All valve boxes shall be capable of a minimum 6-inch top adjustment in either direction, up or down, to or from, the finished curb grades shown in the plans. If any valve box extension pieces are required to make the above-mentioned adjustment, they shall be included in the unit price.

All new and reset valve boxes shall be equipped with a debris plug, as manufactured by Infact Corporation, or approved equal. All new and reset valve boxes shall be equipped with a gate valve box adapter as manufactured by “Adaptor Inc.”, or approved equal. Adapter shall be included with the gate valve.

Set valves on concrete block 6 inches thick and 12 inches square or larger. Install gate valve box adapter over valve operating nut. Center and plumb valve box over valve. Set box cover 0.04 feet below finished grade. Install 3-foot square concrete diamond around gate valve box per City standard gate valve adjustment detail.

Include all costs of gate valve, valve box and debris plugs required to make the above-mentioned adjustment in the unit price bid for “Gate Valve & Box (_)IN.”

724-P07 TRACER WIRE: Provide tracer wire (locating wire) and accessories for all non-metallic mains.

Materials: Open Trench/Boring Installation: Direct burial 12 AWG solid, CCS (Copper Clad Steel), 0.171-inch diameter; boring 8 AWG solid, CCS (copper clad steel) 0.219-inch diameter Steel core high strength for direct burial, with a rated break load of 1,330 pounds and for boring installation a rated break load of 2,785 pounds. 0.045-inch high molecular weight, high density polyethylene, complying with ASTM D1248. High flexibility, stretchable to accommodate ground movement. Impact resistant. 30-volt rating.

Jacket color: Green - "Sewer"; Blue - "Water", Purple - "Reclaimed Water/Irrigation" Physical, permanent, surface legend on insulating jacket, repeated a minimum of every 2 linear feet. For directional boring 2-8 AWG tracer wires shall be installed with the pipe and connected to the tracer wire at both ends.

Connectors: Waterproof and corrosion proof. Prefilled with non-hardening sealant. Lug: Tin plated high conductivity aluminum with high impact polypropylene housing. Product: DryConn Direct Bury Lug. Connectors: CSA certified as both Pressure Type and Direct Bury. Product: DryConn King Direct Bury.

Magnesium Anode: Provide 5-pound anode at each: Hydrant, Every Other Manhole, Connection to existing facilities.

Manufacturers: Tracer Wire Access Box: Valvco: Part SEWAB. Copperhead Lite-Duty Tracer Wire Access Box (LD14*TP) in grass areas at hydrant locations. Copperhead Concrete Driveway Box (CD14*TP) for sidewalks and driveways with light traffic. Copperhead Roadway Box (RB14*TP) for gate valves and manholes in streets and parking lots with heavy traffic.

Installation: Install tracer wire parallel with centerline axis of pipe and at "12 o'clock" position. Do not spiral wrap wire to pipe. Do not install under service saddles. Tape tracer wire to pipe.

Terminate tracer wires in accordance with Drawings. Terminate in tracer wire access box at each gate valve. Provide minimum 3-foot long pigtail at grade termination points within tracer box. Provide 5-pound magnesium anode a maximum of every 1000 feet and at buried pipe ends: Attach to the main tracer wire by solder. Remove anode protective cover. Apply water as directed by manufacturer.

REGISTERED PROFESSIONAL ENGINEER
SCOTT M. SCHNEIDER
PE-5347
DATE 2025.12.18 08:28:06-07'00'
NORTH DAKOTA

NOTES

Trace Wire Electrical Conductivity System Testing: All new trace wire installations shall be located using typical low frequency (512 Hz) line tracing equipment, witnessed by the Contractor, Engineer and City prior to acceptance. Continuity testing in lieu of actual line tracing shall not be accepted. Conductivity testing shall be performed within one week of pressure testing completion.

Include all costs for Tracer Wire in the price bid for “Watermain (_)IN PVC”.

724-P08 WATERMAIN DISINFECTION: Disinfection of potable water distribution and/or transmission system shall be per Disinfecting Water Mains - AWWA C651.

Quality Assurance: Submit bacteriologist's signature and authority associated with testing.

Test all samples at a laboratory approved by the North Dakota State Department of Environmental Quality.

Where possible do not allow any water to be taken from system until after all bacterial results have been confirmed as passing standards. Monitor free residual on an hourly basis for the first 6 hours. Document all test results.Do not allow any water to be taken from system for human consumption until certain it is free of harmful bacteria.

Delivery, Storage And Handling:
Follow all instructions on the Material Safety and Data Sheet (MSDS) on the proper handling and storage of the disinfectant being used.

ENVIRONMENTAL REQUIREMENTS:
Do not dispose disinfection chemicals or water with concentrations of more than 2 mg/l of disinfectant into the environment. Dilute any concentrations greater than 2 mg/l prior to discharge. Properly dispose of all chemical containers.

Manufacturers: Hawkins Chemical or approved equal.

Materials: Certify all disinfectant products as meeting applicable AWWA Standards. Hypochlorite’s, Liquid Chlorine and Chlorine gas, are approved for use in disinfection.

Examination:
Verify that water system has been cleaned, flushed, inspected, and pressure tested. Verify that all services are turned off.

Perform scheduling and disinfecting activity with start-up, testing, adjusting and balancing, demonstration procedures, including coordination with related systems and services.

Execution:
The option to be used can be determined in the field with advance approval by the Engineer.

Option 1 – Tablet Method: During construction, place the following number of calcium hypochlorite tablets in each 20- foot long section of pipe, both mainline and branch lines.

Pipe Diameter	No. of 5-G Tablets
4	1
6	1
8	2
10	3
12	4

Attach the tablets to the inside top of pipe by a food grade adhesive. Attach an equal number of tablets to each section of pipe. When installation is complete, fill the main with water at a rate that maintains a velocity no greater than 1 foot/second. Maintain water in pipe for at least 24 hours. Operate all valves and hydrants during the 24- hour period. At the end of the 24-hour period, residual shall be greater than 2 mg/l of free chlorine. If free residuals are acceptable, flush the main and two (2) sets of bacteriological tests shall be taken for each 1200 LF maximum, of new watermain installed with tests taken at least 24 hours apart. If free residuals are less than the 2 mg/l, the engineer shall determine the appropriate action.

Option 2 - Continuous Feed Method Flush all components to remove particulate matter and air. Flushing should be done at a rate, which maintains a velocity of 2.5 feet/second and continues until water is clear as determined by Engineer. Connect chlorine feed equipment (gas or liquid) at a point not more than 10 feet downstream from beginning of new main. Chlorine shall be fed by solution at a rate, which will provide a free chlorine residual within the main of not less than 25 mg/l. At the end of a 24 hour period, this residual shall not be less than 10 mg/l. The following Table can be used as a guide to determine amounts of chlorine needed:

REGISTERED PROFESSIONAL ENGINEER
SCOTT M. SCHNEIDER
PE-5347
DATE 2025.12.18 08:28:17-07'00'
NORTH DAKOTA

NOTES

Approximate Amount of Chlorine Needed for 50 mg/l Chlorine Solution

Volume of Reservoir or Pipeline (Gallons)	Liquid laundry Bleach (5.25% Chlorine)	Calcium Hydrochlorite (70% Chlorine)
1,000	1 gallons	0.6 Pounds
5,000	5 gallons	3.0 Pounds
10,000	10 gallons	6.0 Pounds
25,000	25 gallons	15.0 Pounds
50,000	50 gallons	30.0 Pounds
75,000	75 gallons	45.0 Pounds
100,000	100 gallons	60.0 Pounds
500,000	500 gallons	300.0 Pounds

Flush main slowly while chlorine is being injected at the upstream end. Regular testing at the discharge point will determine when the entire main has been chlorinated. Maintain chlorinated water in main for 24 hours during which time all valves shall be operated. After the 24-hour period, take two random sample for each 1200 feet maximum, of main being tested. If the free chlorine residual is greater than 10 mg/l at all points tested, flush the main. Take bacteriological tests for each 1200 LF maximum, of new watermain installed with tests taken at least 24 hours apart. If residuals are less than 2 mg/l the Engineer will determine the appropriate course of action.

Option 3 - Slug Method Process is identical to Option 2 except that the water is dosed with chlorine to a concentration of 100 mg/l for a period of three hours. At the end of the 3-hour period, a free chlorine residual not less than 50 mg/l. If the free residual is less than 50 mg/l at any random point tested, as determined by the Engineer, the Engineer will decide an appropriate course of action. If all samples have more than 50 mg/l of free residual, flush the main. Take two (2) sets of bacteriological tests for each 1200 LF maximum, of new watermain installed with tests taken at least 24 hours apart. If residuals are less than 2 mg/l the Engineer will determine the appropriate course of action.

Tolerances: A plate count of "zero" is required on the bacteriological test.
The feed or application rates stated herein are for general guidance only. Refer to AWWA C651 for exact limits.

Field Quality Control:
After final flushing each 1,200-foot segment and branches greater than 50 LF, and before the new water main is connected to the distribution system, two consecutive sets of acceptable samples, per 1,200 foot main or 50-foot branch shall be collected from the new main and taken at least 24 hours apart.
Exact number of free residual tests will vary with the size of system but in no case take fewer than two sets of tests with three (3) random samples, at least 24 hours apart.
Copies of all bacteriological tests shall be sent to the Field Engineer and the City of Dickinson Water Utility Maintenance Department.

Wasted Water:
If any water is wasted as a result of an unsatisfactory bacteriological test, the Contractor shall reimburse the City for the cost to set up a meter and for the volume of water wasted. The rate charged for wasted water shall be determined by the City of Dickinson. This will be paid directly to the City.

Cleanup And Project Closeout: Clean up and properly dispose of all chemicals and containers. Drain any standing water from flushing.

Project Record Documents: Disinfection report: Type and form of disinfectant used. Date and time of disinfectant injection start and time of completion. Test locations.
Initial and 24-hour disinfectant residuals (quantity in treated water) in ppm for each outlet tested (two tests, 24 hours apart). Date and time of flushing start and completion.
Disinfectant residual after flushing in ppm for each outlet tested.

Bacteriological report: Date issued, project name, and testing laboratory name, address, and telephone number. Time and date of water sample collection. Name of person collecting samples. Test locations. Initial and 24-hour disinfectant residuals in ppm for each outlet tested (two tests, 24 hours apart). Coliform bacteria test results for each outlet tested.

Include all costs for disinfection and bacteriological testing, including taps, in the price bid for “Watermain (_)IN PVC”.

724-P09 TEMPORARY WATER SERVICE: Provide temporary water service as needed so that interruption of water service is minimized during construction and limited to maximum of 6-hours. Provide the City of Dickinson and all affected users a 48-hour notice. Clean, disinfect and flush the temporary water services lines. Temporary water service shall be disinfected and tested per the requirements of plan note 724-P08. Include all costs for temporary water service in the price bid for “Watermain (_)IN PVC”.

744-P01 INSULATION:
The insulation shall have a thermal conductivity of not more than 0.28 BTU per hour per square foot per degree Fahrenheit per inch of thickness as tested in accordance with ASTM C177. The insulation shall not absorb moisture to an extent greater than 2.5 percent by volume as tested in accordance with ASTM D2127. The compression strength of the insulation shall be greater than 20 psi as tested in accordance with ASTM D-1621. The density of the insulation shall be between 0.9 and 1.3 pounds per cubic feet as tested in accordance with ASTM D-1622. The insulation shall be specifically designed for protection of underground utilities. Include all costs of insulation in the price bid for “Insulation Board”

REGISTERED PROFESSIONAL ENGINEER
SCOTT M. SCHNEIDER
PE-5347
DATE 2025.12.18 08:28:29-07'00'
NORTH DAKOTA

770-P01 REMOVE LIGHT STANDARD: Remove light standard, luminaire, concrete foundation, and associated circuitry back to the power source. Dispose of all concrete foundation material and high pressure sodium luminaires off-site. Deliver street light standards and LED luminaires to City of Dickinson Public Works facility at 3411 Public Works Blvd in Dickinson, ND.

770-P02 TEMPORARY LIGHTING SYSTEM: Install a complete temporary lighting system consisting of wood poles, mast arms, LED luminaires, conduit, overhead/underground conductors, temporary feed point modifications, utility coordination to ensure project area shown has lighting during all phases of construction. Remove the temporary lighting system once permanent system is operational. Temporary lighting system components are not allowed to be used for the permanent lighting system unless specifically noted. Include all costs associated with this work as shown in Section 140 plan sheets.

770-P03 2” DIAMETER RIGID CONDUIT: Schedule 40 PVC conduit or continuous 2” HDPE innerduct with minimum wall thickness equivalent to Schedule 40 PVC are acceptable for use on this project. Innerduct is to be UL 651 listed and be red.

770-P04 REVISE HIGWAY LIGHTING FEEDPOINT: The existing feed point location is to be revised as follows:

Disconnect existing power feed from utility company and existing street lighting circuits. Remove and dispose of existing feed point enclosure, all components and utility meter socket. Existing feed point to be modified and used for temporary lighting circuit.

Provide a new Type II feed point enclosure, concrete foundation/pad, load center, control contactors, remote photoelectric control, meter socket, and miscellaneous devices as shown on the feed point detail.

The feedpoint enclosure is to be a minimum size of 42” wide x 12” deep and 51” high with a domed roof, NEMA 3R drip shield and two doors. Enclosure is to be constructed of minimum 1/8” thick aluminum, NEMA 3R, UL listed with a brushed aluminum finish. The doors shall have an aluminum continuous piano-style hinge, a neoprene gasket, and a stainless steel 3-point latch capable of being padlocked. The enclosure is to be equipped with back panel rails such that equipment may be mounted in the cabinet with no penetrations to the exterior of the cabinet. The back panel is to be galvanized steel.

Provide load center with circuit breaker configuration as shown on the plans. Reconnect existing circuits and provide lighting contactors for each lighting circuit shown. Contactor to have 2 poles, rated at 60 amps, 120 volt coil, contacts in normally open position when coil is de-energized and NEMA 1 enclosure

Provide toggle switch for testing of the lighting with engraved nameplates with “test” and “auto”. Provide GFCI duplex receptacle on dedicated 20-amp circuit breaker.

Provide minimum 4” x 4” x 36” NEMA 12 or larger size as required, painted steel trough with hinged cover and screw clamps – Hoffman #F44T36HC or equal. Provide accessories to convert screw clamps to quick access latches – Hoffman #AL23 or equal. Install trough with latches on top side and hinge on the bottom. All circuitry within feed point enclosure is to be routed in conduit.

Duct seal all conduits with conductors that enter enclosure. Install mechanical plugs in all spare conduits.

Provide new concrete foundation per Section 140 plan details.

Coordinate all electrical utility service modifications for the feedpoints with:

Tanner Lewis
Montana Dakota Utilities
(701) 456-7119
Tanner.Lewis@mdu.com

Include all costs to perform work to revise feed points in the price bid for “Lighting System B”.

770-P05 LIGHT STANDARD 8FT MAST ARM 30FT MOUNTING HEIGHT-BREAKAWAY: Light standard is to be a 30’ round tapered aluminum alloy 6063-T6 pole with breakaway base flange/support system with shroud base. Minimum pole wall thickness of 0.156”. Internal vibration damper. Aluminum alloy 8’ mast arm with rise for 32’ mounting height. All components are to have powder coated black finish, color #37038 of the Federal Standard No. 595B colors. Include all anchor bolts, hardware, handhole, etc. Light standard to be Valmont #R+1MA0832S-320845905T4 XXX 4000 Series or Hapco #114908P1 Series

REGISTERED PROFESSIONAL ENGINEER
WESLEY GULLICKS
PE-6068
DATE 2025.12.18 07:21:08 -06'00'
NORTH DAKOTA

NOTES

770-P06 LED LUMINAIRE: Provide LED luminaires with the following specifications:

LED Luminaire basis of design:
American Electric Lighting Model ATB0 P452 MVOLT R3 4K BK NL BAA NR
Light Output: Minimum of 19,000 delivered lumens.
Color Temperature: 4000K.
Wattage: 125 watts.
IES Distribution: Type III as indicated on the plans.
Voltage: Multi-voltage operation from 120 to 277 volts.Project voltage: 240V.
Housing: Diecast aluminum. Tool-less entry. Black finish to match light standard.
Surge Suppression Rating: ANSI/IEEE C136.2 10kV/5kA minimum
Operating Range: -40°C to 40°C

REGISTERED PROFESSIONAL ENGINEER
WESLEY GULLICKS
PE-6068
DATE 2025.12.18 07:21:29 -06'00'
NORTH DAKOTA

STATE	PROJECT NO.	SECTION NO.	SHEET NO.
ND	HEN-5-022(144)069	8	1

Estimated Quantities

SPEC	CODE	ITEM DESCRIPTION	UNIT	HEN	HEN Local	Local Only		TOTAL
103	0100	CONTRACT BOND	L SUM	0.136	0.031	0.006		0.173
107	1000	CONTAMINATED SOIL MONITORING AND MITIGATION	DAY	3				3
108	0001	CRITICAL PATH METHOD SCHEDULE	L SUM	0.173				0.173
109	1000	E-TICKETING	L SUM	0.173				0.173
201	0332	CLEARING & GRUBBING-SITE 2	L SUM	1				1
201	0370	REMOVAL OF TREES 10IN	EA	5				5
201	0380	REMOVAL OF TREES 18IN	EA	4				4
202	0136	REMOVAL OF PAVEMENT	TON	1978	783			2761
202	0174	REMOVAL OF PIPE ALL TYPES AND SIZES	LF	33		28		61
202	0500	ACP WATERMAIN REMOVAL	LF			250		250
203	0101	COMMON EXCAVATION-TYPE A	CY	3036				3036
203	0109	TOPSOIL	CY	824				824
203	0113	COMMON EXCAVATION-WASTE	CY	2379				2379
216	0100	WATER	M GAL	138				138
230	0320	SUBGRADE PREPARATION-TYPE C-12IN	STA	6	6			12
251	0200	SEEDING CLASS II	ACRE	0.92	0.28			1.2
251	2000	TEMPORARY COVER CROP	ACRE	1.11	0.28			1.39
253	0201	HYDRAULIC MULCH	ACRE	2.03	0.56			2.59
255	0103	ECB TYPE 3	SY	27				27
260	0200	SILT FENCE SUPPORTED	LF	75				75
260	0201	REMOVE SILT FENCE SUPPORTED	LF	75				75
261	0112	FIBER ROLLS 12IN	LF	539	506			1045
261	0113	REMOVE FIBER ROLLS 12IN	LF	232	253			485
302	0100	SALVAGED BASE COURSE	TON	3022	1635			4657
302	0120	AGGREGATE BASE COURSE CL 5	TON	1650				1650
401	0050	TACK COAT	GAL	268	49			317
401	0060	PRIME COAT	GAL	147	121			268
401	0160	BLOTTER MATERIAL CL 44	TON	4	3			7
411	0105	MILLING PAVEMENT SURFACE	SY	1075	92			1167
430	0045	SUPERPAVE FAA 45	TON	1361	485			1846
430	1000	CORED SAMPLE	EA	7				7
430	5818	PG 58H-34 ASPHALT CEMENT	TON	74	15			89
550	0105	6IN NON-REINF CONCRETE PAVEMENT CL AE	SY	64				64
550	0305	9IN NON-REINF CONCRETE PVMT CL AE-DOWELED	SY	3124	1460			4584
550	0330	NON-REINF CONCRETE PVMT CL AE-DOWELED-COLORED	SY	401				401
550	0335	NON-REINF CONCRETE PVMT CL AE-DOWELED-COLORED-TEXT	SY	187	108			295
624	0123	PEDESTRIAN RAILING	LF	50.5				50.5
702	0100	MOBILIZATION	L SUM	0.136	0.031	0.006		0.173
704	0100	FLAGGING	MHR	2500				2500
704	1000	TRAFFIC CONTROL SIGNS	UNIT	4116				4116
704	1020	ATTENUATION DEVICE SPECIAL	EA	6				6
704	1052	TYPE III BARRICADE	EA	32				32
704	1054	SIDEWALK BARRICADE	EA	5				5
704	1058	PEDESTRIAN WALKWAY	LF	535				535
704	1060	DELINEATOR DRUMS	EA	135				135
704	1067	TUBULAR MARKERS	EA	66				66
704	1080	STACKABLE VERTICAL PANELS	EA	65				65

STATE	PROJECT NO.	SECTION NO.	SHEET NO.
ND	HEN-5-022(144)069	8	2

Estimated Quantities

SPEC	CODE	ITEM DESCRIPTION	UNIT	HEN	HEN Local	Local Only		TOTAL
704	1500	OBLITERATION OF PAVEMENT MARKING	SF	1106				1106
704	2108	TEMPORARY CURB RAMP	EA	6				6
704	3511	STATE FURNISHED MEDIAN BARRIER	LF	230				230
706	0400	FIELD OFFICE	EA	0.173				0.173
706	0500	AGGREGATE LABORATORY	EA	0.173				0.173
706	0550	BITUMINOUS LABORATORY	EA	0.173				0.173
706	0600	CONTRACTOR'S LABORATORY	EA	0.173				0.173
708	1540	INLET PROTECTION-SPECIAL	EA	5	2			7
708	1541	REMOVE INLET PROTECTION-SPECIAL	EA	5	2			7
709	0100	GEOSYNTHETIC MATERIAL TYPE G	SY	5284	2552			7836
714	4097	PIPE CONDUIT 15IN-STORM DRAIN	LF	110				110
714	4101	PIPE CONDUIT 18IN-STORM DRAIN	LF	542				542
714	4112	PIPE CONDUIT 30IN-STORM DRAIN	LF	508				508
720	0110	RIGHT OF WAY MARKERS	EA	9				9
720	0125	ALIGNMENT MONUMENTS	EA	5				5
720	0130	IRON PIN R/W MONUMENTS	EA	8				8
720	0135	IRON PIN REFERENCE MONUMENTS	EA	7				7
722	0110	MANHOLE 60IN	EA	2				2
722	0120	MANHOLE 72IN	EA	1				1
722	1110	MANHOLE RISER 60IN	LF	9.52				9.52
722	1120	MANHOLE RISER 72IN	LF	5.68				5.68
722	3510	INLET-TYPE 2	EA	3				3
722	4010	INLET CATCH BASIN 6IN BEEHIVE	EA	1				1
722	4060	INLET MOUNTABLE CURB-TYPE B	EA	2				2
722	6140	ADJUST GATE VALVE BOX	EA	7				7
722	6200	ADJUST MANHOLE	EA	2				2
722	6241	ADJUST SPRINKLER SYSTEM	L SUM	1				1
724	0210	FITTINGS-DUCTILE IRON	LBS			540		540
724	0270	REMOVE GATE VALVE & BOX	EA			1		1
724	0300	GATE VALVE & BOX 6IN	EA			1		1
724	0310	GATE VALVE & BOX 8IN	EA			2		2
724	0375	RELOCATE GATE VALVE & BOX	EA	2				2
724	0402	SALVAGE 6IN HYDRANT	EA	2				2
724	0411	6IN HYDRANT	EA	1				1
724	0425	RESET HYDRANT	EA	2				2
724	0430	REMOVE HYDRANT	EA	1				1
724	0490	SLEEVE 6IN	EA			2		2
724	0810	WATERMAIN 6IN PVC	LF	18		15		33
724	0830	WATERMAIN 8IN PVC	LF	13		233		246
724	0944	CONNECTION TO EXISTING MAIN	EA	2		2		4
724	0955	WATER SERVICE CONNECTION 1IN	EA			1		1
724	7017	1IN CORPORATION-NEW SERVICE	EA			1		1
744	0050	INSULATION BOARD	CF			11		11
748	0120	CURB & GUTTER MOUNTABLE-TYPE I	LF	1314	762			2076
748	0140	CURB & GUTTER-TYPE I	LF	1986	854			2840
748	1030	VALLEY GUTTER 72IN	SY	28				28
750	0030	PIGMENTED IMPRINTED CONCRETE	SY	290	88			378

STATE	PROJECT NO.	SECTION NO.	SHEET NO.
ND	HEN-5-022(144)069	8	3

Estimated Quantities

SPEC	CODE	ITEM DESCRIPTION	UNIT	HEN	HEN Local	Local Only		TOTAL
750	0101	SIDEWALK CONCRETE REINF	SY	11				11
750	0115	SIDEWALK CONCRETE 4IN	SY	494	254			748
750	0140	SIDEWALK CONCRETE 6IN	SY	60				60
750	0210	CONCRETE MEDIAN NOSE PAVING	SY	50	9			59
750	1000	DRIVEWAY CONCRETE	SY	443	256			699
750	2115	DETECTABLE WARNING PANELS	SF	192				192
752	0911	TEMPORARY SAFETY FENCE	LF	561				561
754	0110	FLAT SHEET FOR SIGNS-TYPE XI REFL SHEETING	SF	201				201
754	0112	FLAT SHEET FOR SIGNS-TYPE IV REFL SHEETING	SF	131				131
754	0170	FLEXIBLE DELINEATORS	EA	43				43
754	0206	STEEL GALV POSTS-TELESCOPING PERFORATED TUBE	LF	650				650
754	0592	RESET SIGN PANEL	EA	2				2
754	0593	RESET SIGN SUPPORT	EA	1				1
754	0805	OBJECT MARKERS - CULVERTS	EA	1				1
762	0110	EPOXY PVMT MK 4IN LINE-GROOVED	LF	3148	1219			4367
762	0122	PREFORMED PATTERNED PVMT MK-MESSAGE(GROOVED)	SF	72				72
762	0135	EPOXY PVMT MK 24IN LINE-GROOVED	LF		66			66
762	0136	EPOXY PVMT MK MESSAGE-GROOVED	SF	32				32
762	0430	SHORT TERM 4IN LINE-TYPE NR	LF	4392				4392
762	1305	PREFORMED PATTERNED PVMT MK 4IN LINE-GROOVED	LF	161	508			669
762	1309	PREFORMED PATTERNED PVMT MK 8IN LINE-GROOVED	LF	68				68
762	1325	PREFORMED PATTERNED PVMT MK 24IN LINE-GROOVED	LF	250				250
770	0004	LIGHTING SYSTEM B	EA	1				1
770	0330	2IN DIAMETER RIGID CONDUIT	LF			140		140
770	4501	TEMPORARY LIGHTING SYSTEM	EA	0.4				0.4
930	9550	MECHANICALLY STABILIZED EARTH WALL	SF	108				108
970	1000	TREES	EA	8				8
970	1011	LANDSCAPE PLANTINGS	L SUM	1				1

STATE	PROJECT NO.	SECTION NO.	SHEET NO.
ND	HEN-5-022(144)069	10	1

Paving											
				Sheet Total							
Alignment	Begin Station	End Station	Sheet No.	Surface Area Salvaged Base Course	Surface Area Superpave FAA 45	Surface Area Milled Surface	Superpave FAA 45	401 0050 TACK COAT	401 0060 PRIME COAT	401 0160 BLOTTER MATERIAL CL 44	430 5818 PG 58H-34 ASPHALT CEMENT
				(SY)	(SY)	(SY)	(TON)	(GAL)	(GAL)	(TON)	(TON)
HEN-5-022(144)069											
SCL8	65+42	71+00	1	266	539	100	150	37	67	2	9
SCL22	3673+44	3677+36	2	321	1043	50	290	57	80	2	18
							Subtotal	94	147	4	27
HEN-5-022(144)069-Local											
SCL8	65+42	71+00	1	485	980	-	246	49	121	3	15
							Subtotal	49	121	3	15
							Total	143	268	6	42

Work Zone Traffic Control Paving and Removal							
Description	Pavng Surface Area (SF)	302 120 AGGREGATE BASE COURSE CL 5 (TON)	401 0050 TACK COAT (Gal)	430 0045 SUPERPAVE FAA 45 (TON)	PG 58H-34 ASPHALT CEMENT (TON)	Removal Surface Area (SF)	202 0136 REMOVAL OF PAVEMENT
Phase 2 & 3 (N-S bypass 102+64-103+82)	2,968	137	16	73	4.5	2,968	73
Phase 2 & 3 (N-S bypass 104+18-106+25	20,664	957	115	510	31.1	7,453	184
Phase 2 & 3 (N-S bypass 107+50-111+00)	4,888	226	27	121	7.4	4,888	121
Phase 4 (E-W Bypass 205+00-205+50)	2,803	130	16	69	4.2	2,803	69
Access		200					
Total:		1,650	174	773	47.2		447

Surfacing Quantities Summary											
			Subtotal Description								Total
			Section 10 Paving Table		Section 10 Work Zone Traffic Control	Section 40		Section 90		Subtotal	
Spec - Code	Item Description	Unit	HEN	HEN - Local	HEN	HEN	HEN - Local	HEN	HEN - Local	HEN	HEN - Local	
202 - 0136	REMOVAL OF PAVEMENT	TON			447	1,531	783			1,978	783	2,761
302 - 0100	SALVAGED BASE COURSE	TON						3,022	1,635	3,022	1,635	4,657
302 - 0120	AGGREGATE BASE COURSE CL 5	TON			1,650					1,650	0	1,650
401 - 0050	TACK COAT	GAL	94	49	174					268	49	317
401 - 0060	PRIME COAT	GAL	147	121						147	121	268
401 - 0160	BLOTTER MATERIAL CL 44	TON	4	3						4	3	7
411 - 0105	MILLING PAVEMENT SURFACE	SY				1,075	92			1,075	92	1,167
430 - 0045	SUPERPAVE FAA 45	TON			773			588	485	1,361	485	1,846
430 - 5818	PG 58H-34 ASPHALT CEMENT	TON	27	15	47					74	15	89
550 - 0105	6IN NON-REINF CONCRETE PAVEMENT CL AE	SY						64		64	0	64
550 - 0305	9IN NON-REINF CONCRETE PVMT CL AE-DOWELED	SY						3,124	1,460	3,124	1,460	4,584
550 - 0330	NON-REINF CONCRETE PVMT CL AE-DOWELED-COLORED	SY						401		401	0	401
550 - 0335	NON-REINF CONCRETE PVMT CL AE-DOWELED-COLORED-TEXT	SY						187	108	187	108	295
709 - 0100	GEOSYNTHETIC MATERIAL TYPE G	SY						5,284	2,552	5,284	2,552	7,836
748 - 0120	CURB & GUTTER MOUNTABLE-TYPE I	LF						1,314	762	1,314	762	2,076
748 - 0140	CURB & GUTTER-TYPE I	LF						1,986	854	1,986	854	2,840
748 - 1030	VALLEY GUTTER 72IN	SY						28		28	0	28
750 - 0030	PIGMENTED IMPRINTED CONCRETE	SY						290	88	290	88	378
750 - 0115	SIDEWALK CONCRETE 4IN	SY						494	254	494	254	748
750 - 0140	SIDEWALK CONCRETE 6IN	SY						60		60	0	60
750 - 0210	CONCRETE MEDIAN NOSE PAVING	SY						50	9	50	9	59
750 - 1000	DRIVEWAY CONCRETE	SY						443	256	443	256	699

Basis
SALVAGED BASE COURSE @ 1.875 Ton/CY
AGGREGATE BASE COURSE CL 5 @ 1.875
TACK COAT @ 0.05 Gal/SY
TACK COAT @ 0.10 Gal/SY Milled Areas
PRIME @ 0.25 Gal/SY
MILLING PAVEMENT SURFACE @ 2 Ton/CY
SUPERPAVE FAA 45 @ 2 Ton/CY
PG 58H-34 ASPHALT CEMENT @ 6.1%

Removals Basis
MILLING PAVEMENT SURFACE @ 2 Ton/CY
BITUMINOUS PAVEMENT @ 2 Ton/CY
CONCRETE @ 2 Ton/CY

Basis of Estimate

ND 22 and 8th St S Intersection

REGISTERED PROFESSIONAL ENGINEER
DAWN L.S. MICHEL
PE-8029
DATE 2026.01.08 18:03:59 -06'00'
NORTH DAKOTA

				Summary of Erosion Control Devices									
				Section 20	Section 76 - WZTC		Section 76		Section 77		Subtotal		Total
					HEN	HEN Local	HEN	HEN Local	HEN	HEN Local	HEN	HEN Local	
	251	200	SEEDING CLASS II						0.92	0.28	0.92	0.28	1.2
	251	2000	TEMPORARY CROP COVER		0.20		0.91	0.28			1.11	0.28	1.39
	253	0201	HYDRAULIC MULCH		0.20		0.91	0.28	0.92	0.28	2.03	0.56	2.59
	255	0103	ECB TYPE 3	27							27		27
	260	0200	SILT FENCE SUPPORTED		75						75		75
	260	0201	REMOVE SILT FENCE SUPPORTED				75				75		75
	261	0112	FIBER ROLLS 12IN				232	253	307	253	539	506	1045
	261	0113	REMOVE FIBER ROLLS 12IN				232	253			232	253	485
	708	1540	INLET PROTECTION-SPECIAL		5	2					5	2	7
	708	1541	REMOVE INLET PROTECTION-SPECIAL				5	2			5	2	7
	722	6241	ADJUST SPRINKLER SYSTEM								1		1

Salvaged Aggregate Summary		
	SY	TON
Milling Pavement Surface	1,167	65
Removal of Pavement - Concrete		545
Removal of Pavement - Bituminous		1,768
Subtotal:		2,378
5% Less for Crushing and Handling		119
Total Salvaged Material Available		2,259
Total Salvaged Base Course needed		4,657

Note: This is not a balance sheet. The contractor must balance their own materials. Material may not be available when needed.

216 0100 WATER			
Material	Basis	Basis Quantity	Quantity (MGAL)
Dust Palliative	25 MGal/Mile	0.2 Mile	5
Embankment	10 Gal/CY	657 CY	7
Aggregates	20 Gal/Ton	6,307 Ton	126
		Total:	138 MGal

754 0805 OBJECT MARKERS - CULVERTS		
Alignment	Station	EA
SCL22	3673+30	1
	Total:	1

Note: Refer to Standard Drawing D-754-83

Location	203 0101 COMMON EXCAVATION-TYPE A (CY)	Embankment (CY)	203 113 COMMON EXCAVATION - WASTE (CY)	203 0109 TOPSOIL (CY) (available)
	A	B	C = A - B	
ND 22 Sta 3674+00 to 3684+00	2,011	487	1,523	824
8th St Sta 66+00 to 67+42 & Sta 69+42 to 73+00	1,025	169	856	
Total:	3,036	657	2,379	824

Notes:
1. This computation report is not a balance sheet. The Contractor shall calculate their own balance of materials.
2. An additional volume of 25% to allow for shrinkage is included in all embankment volumes.
3. Prismoidal Method used to calculate earthwork.

230 0320				
SUBGRADE PREPARATION - TYPE C - 12 IN				
	Begin Station	End Station	Basis	Quantity (STA)
HEN-5-022(144)069				
ND 22	2675+38	2681+05	100 LF/Sta	5.7
HEN-5-022(144)069 Subtotal:				5.7
HEN-5-022(144)069 - Local				
8th St W	65+42	68+19	100 LF/Sta	2.8
8th St E	68+67	72+00	100 LF/Sta	3.3
HEN-5-022(144)069 - Local Subtotal:				6.1
Total:				12

430 1000 CORED SAMPLE										
				A	B		C			
Specification Section	Location	Begin Station	End Station	Distance (Ft) /1000	Lanes	Joints	Lifts	Quantity (A * B * C)	Quantity (1 per mile)	Unit
430.04 I.2.b(2), "Pavement Density Cores"										
	SCL22	3673+43	3675+38	0.5	2	N/A	1	1	N/A	EA
	SCL8	71+00	72+00	0.5	2	N/A	3	3	N/A	EA
SSP 4 Longitudinal Joint Density in HMA Pavments (Centerline)										
	SCL22	3673+43	3675+38	1	N/A	1	1	1	N/A	EA
	SCL8	71+00	72+00	1	N/A	1	1	1	N/A	EA
430.04 I.2.b(3), "Pavement Thickness Determination Cores"										
	SCL22	3673+43	3675+38	N/A	N/A	N/A	N/A	N/A	N/A	EA
	SCL8	71+00	72+00	N/A	N/A	N/A	N/A	N/A	1	EA
							Subtotal:	6	1	EA
							Total:	7		EA

Basis of Estimate

ND 22 and 8th St S Intersection

REGISTERED PROFESSIONAL ENGINEER
DAWN L.S. MICHEL
PE-8029
DATE 2026.01.08 18:04:38 -06'00'
NORTH DAKOTA

STATE	PROJECT NO.	SECTION NO.	SHEET NO.
ND	HEN-5-022(144)069	20	1

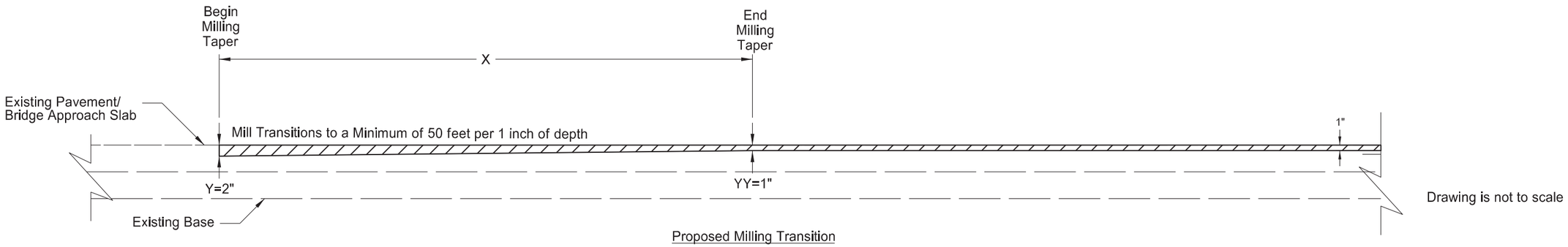

Proposed Milling Transition

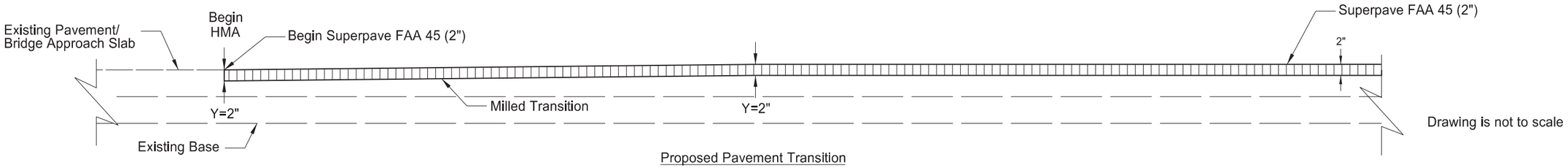

Proposed Pavement Transition

MILLING TRANSITIONS					
Location	X (LF)	Begin Milling Taper/ Paving Station	Y (IN)	YY (IN)	End Milling Taper Station
ND 22	50	3673+44	2	1	3673+94

General Details

ND 22 and 8th St S Intersection

Milling and Paving End Transitions

REGISTERED PROFESSIONAL ENGINEER
DAWN L.S. MICHEL
PE-8029
DATE 2025.12.30 11:33:44 -06'00'
NORTH DAKOTA

STATE	PROJECT NO.	SECTION NO.	SHEET NO.
ND	HEN-5-022(144)069	20	2

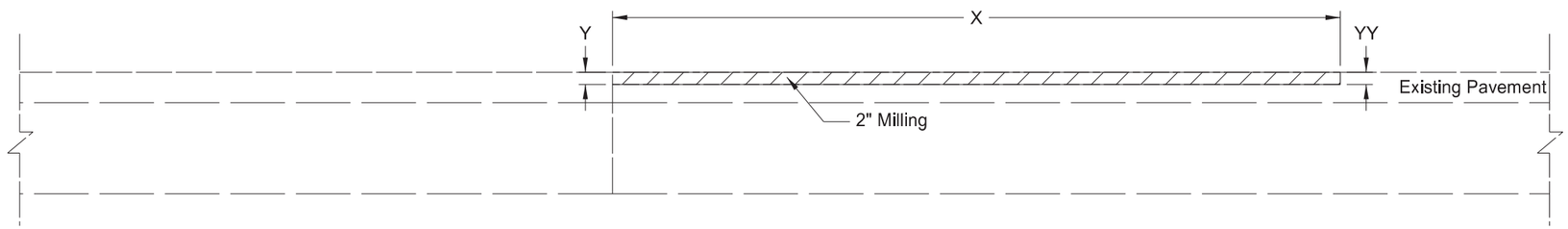

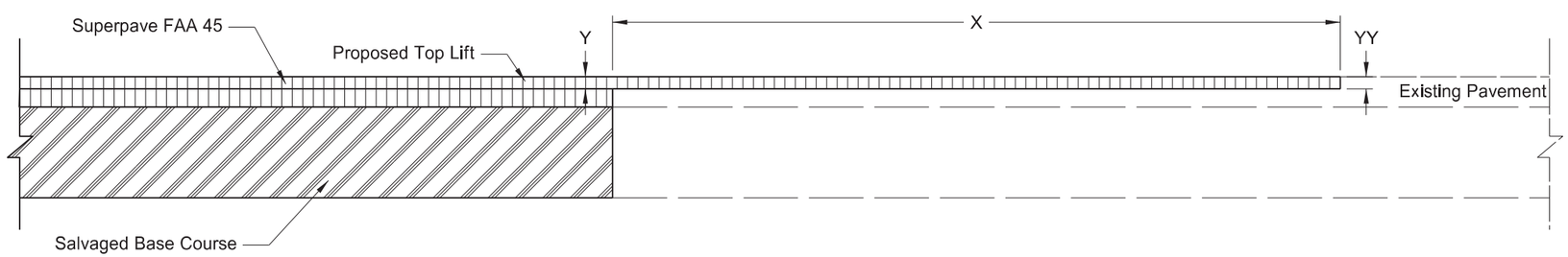

MILLING AND PAVING TRANSITIONS					
Location	X (LF)	Begin Milling/ Paving Station	Y (IN)	YY (IN)	End Milling Station
ND 22	10	3681+05	2	2	3681+15
8th St	10	72+00	2	2	72+10
W Frontage Rd	10	Tie In	2	2	Tie In + 10'
E Frontage Rd	10	Tie In	2	2	Tie In + 10'

General Details

ND 22 and 8th St S Intersection

Paving Intersection Transitions

REGISTERED PROFESSIONAL ENGINEER
DAWN L.S. MICHEL
PE-8029
DATE 2025.12.30 11:34:03 -06'00'
NORTH DAKOTA

STATE	PROJECT NO.	SECTION NO.	SHEET NO.
ND	HEN-5-022(144)069	20	3

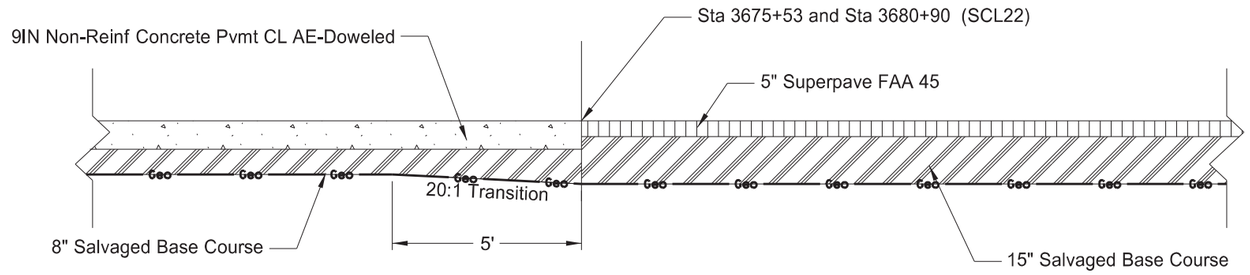

Aggregate Transition Concrete to HMA Pavement / 15" Salvaged Base Course
ND 22

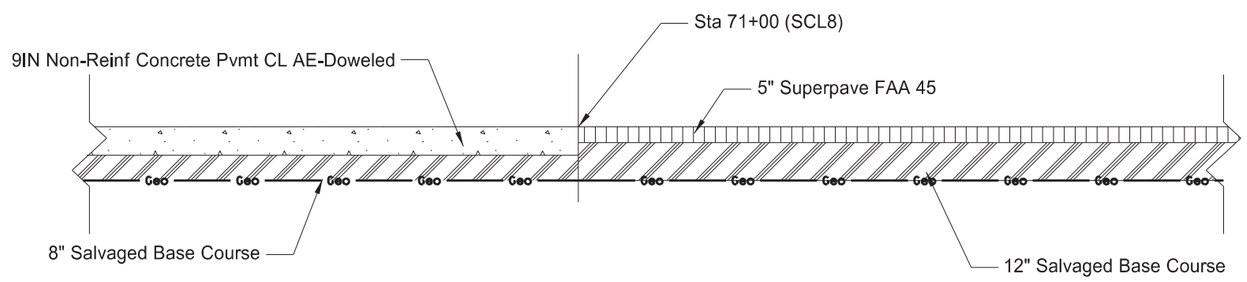

Aggregate Transition Concrete to HMA Pavement / 12" Salvaged Base Course
8th St

General Details

ND 22 and 8th St S Intersection

Aggregate Transitions

REGISTERED PROFESSIONAL ENGINEER
DAWN L.S. MICHEL
PE-8029
DATE 2025.12.30 11:34:19 -06'00'
NORTH DAKOTA

STATE	PROJECT NO.	SECTION NO.	SHEET NO.
ND	HEN-5-022(144)069	20	4

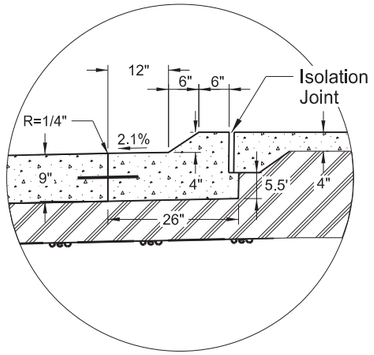

Detail 1B - Not to Scale*
Curb and Gutter Mountable - Type 1
(Splitter Island Spill Curb & Gutter)

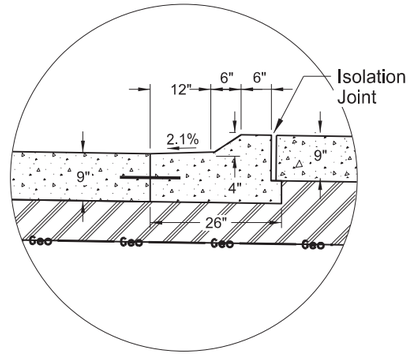

Detail 1A - Not to Scale*
Curb and Gutter Mountable - Type 1
(Splitter Island Spill Curb & Gutter)

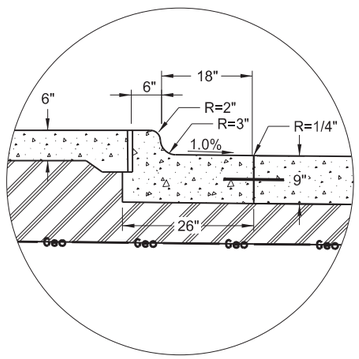

Detail 2 - Not to Scale*
Curb & Gutter Type 1 (Sec B)

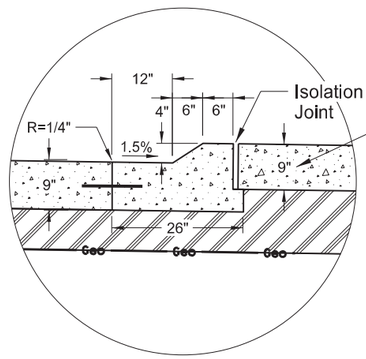

** 4" with thickened edge similar to Detail 1B

Detail 4 - Not to Scale*
Curb and Gutter Mountable - Type 1
(Splitter Island Curb & Gutter)

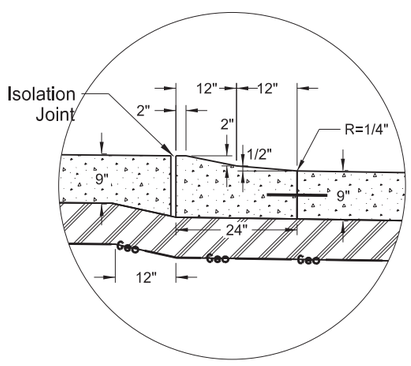

Detail 3 - Not to Scale*
Curb and Gutter Mountable - Type 1
(Truck Apron Curb & Gutter)

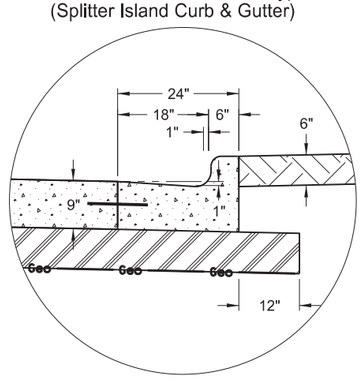

Detail 5 - Not to Scale*
Curb & Gutter Type 1 (Sec A)

Legend

- Concrete (Various)
- Salvaged Base Course
- Topsoil

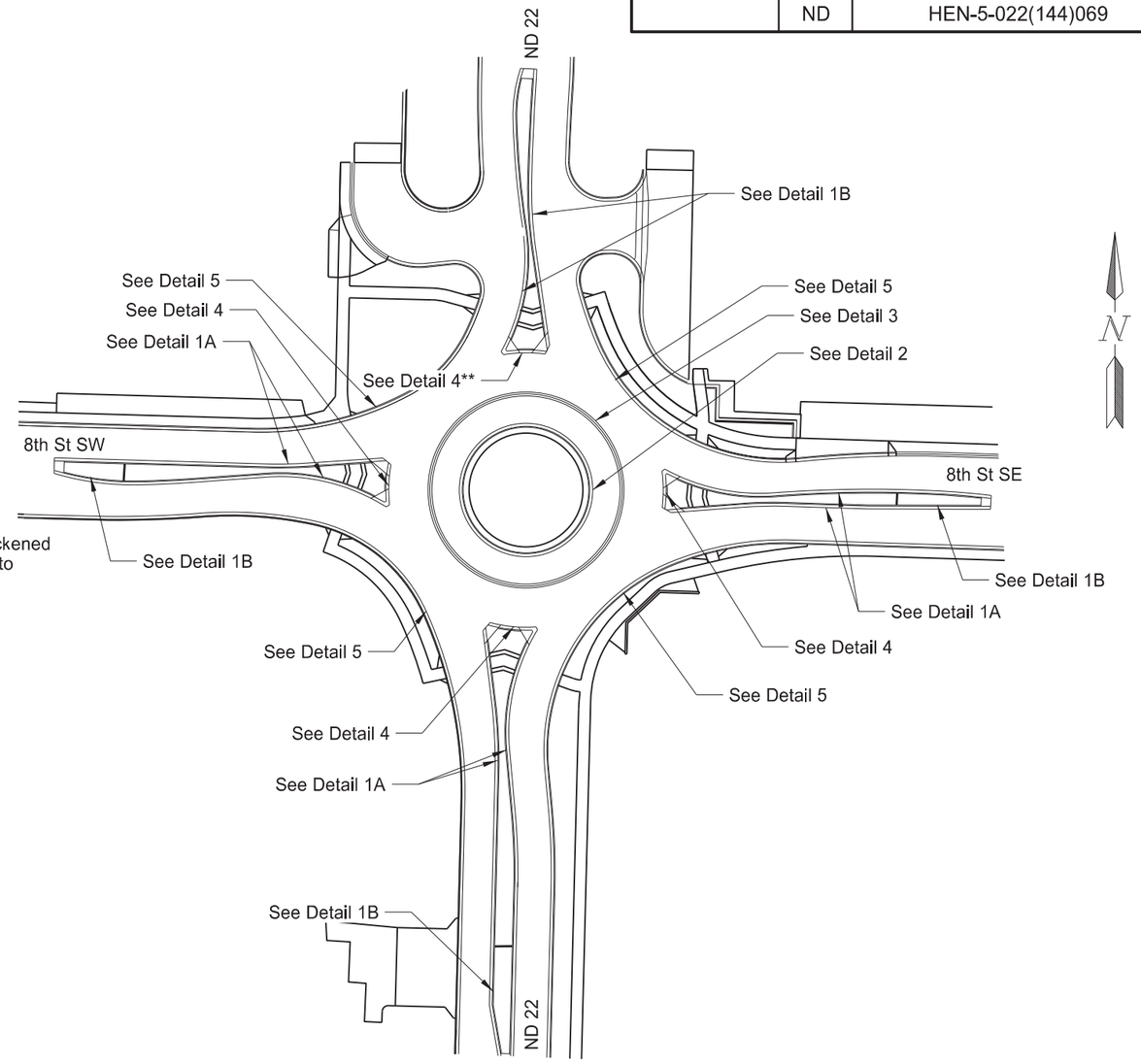

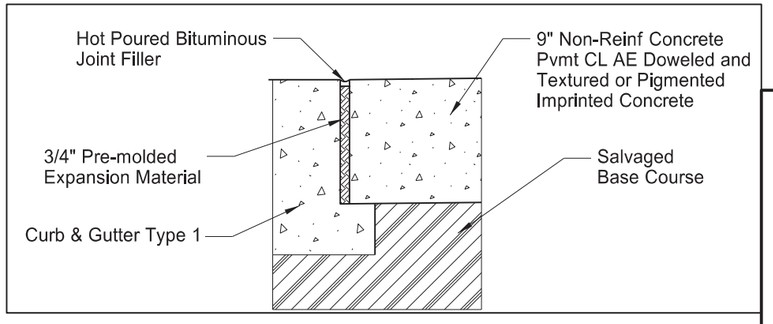

Isolation Joint

Notes:

1. Detail 1 gutter pan to transition into Detail 4 gutter pan over a distance of 10 feet from the beginning of radius to provide drainage.

General Details

ND 22 and 8th St S Intersection

Curb Details

REGISTERED PROFESSIONAL ENGINEER
DAWN L.S. MICHEL
PE-8029
DATE 2025.12.30 11:34:36 -06'00'
NORTH DAKOTA

STATE	PROJECT NO.	SECTION NO.	SHEET NO.
ND	HEN-5-022(144)069	20	5

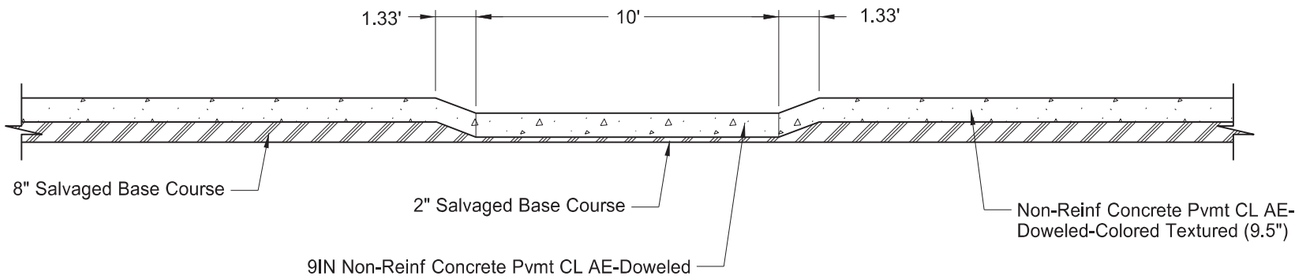

A-A

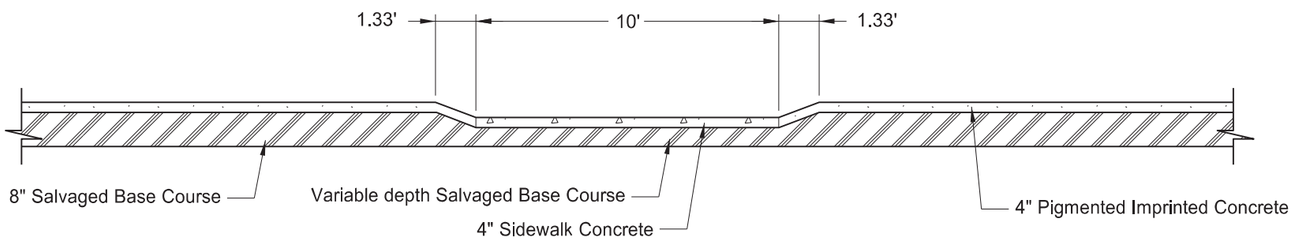

B-B

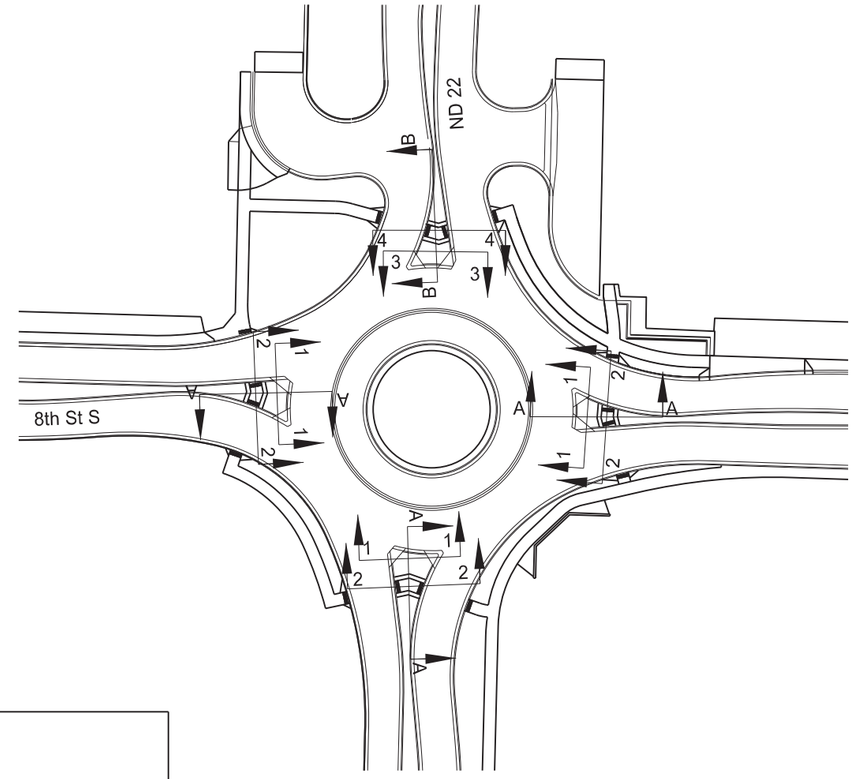

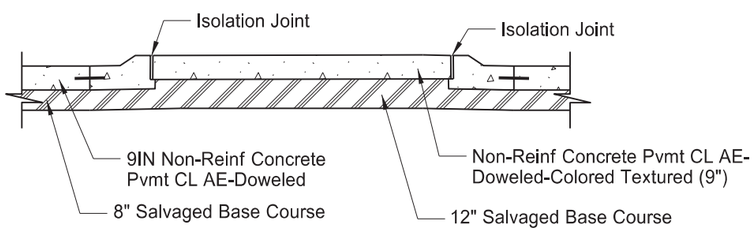

1-1

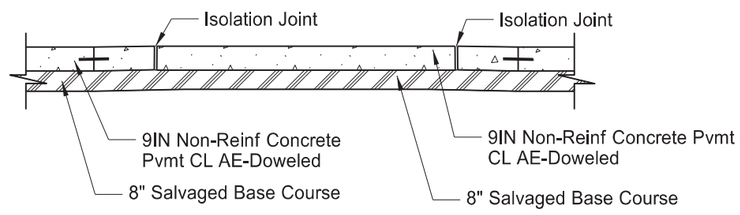

2-2 (Crosswalk)

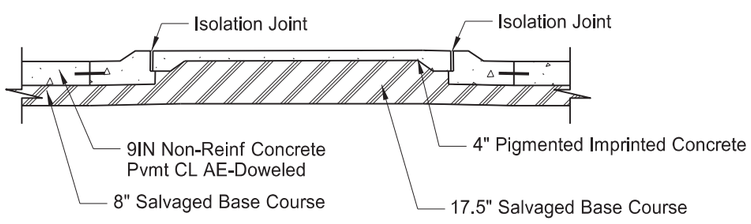

3-3

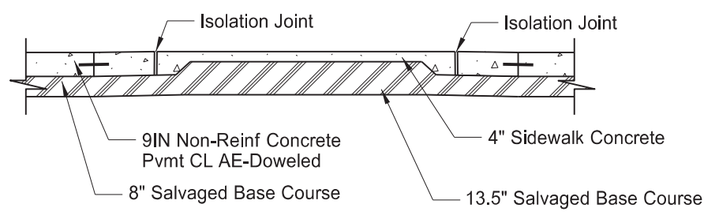

4-4 (Crosswalk)

See Sheet 20-4 for Isolation Joint Details.

Legend

Concrete (Various)

Salvaged Base Course

General Details

ND 22 and 8th St S Instersection

Median Details

REGISTERED PROFESSIONAL ENGINEER
DAWN L.S. MICHEL
PE-8029
DATE 2025.12.30 11:34:51 -06'00'
NORTH DAKOTA

STATE	PROJECT NO.	SECTION NO.	SHEET NO.
ND	HEN-5-022(144)069	20	6

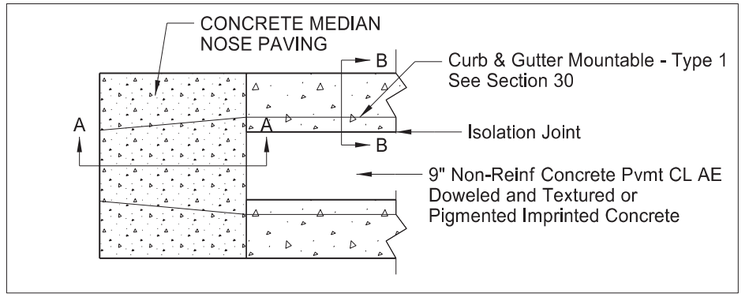

Location 1

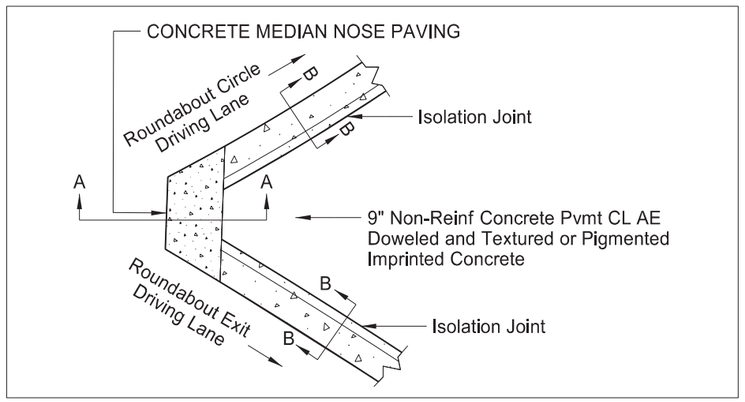

Location 2

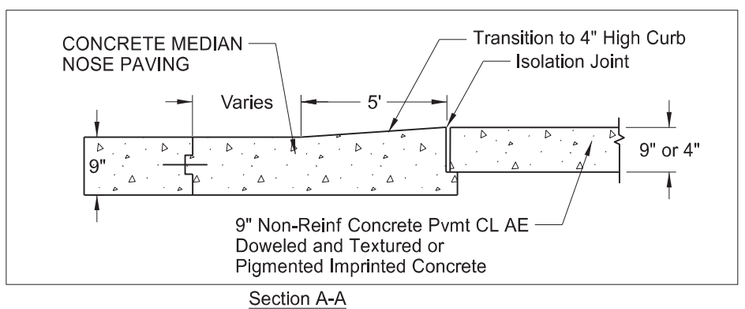

Section A-A

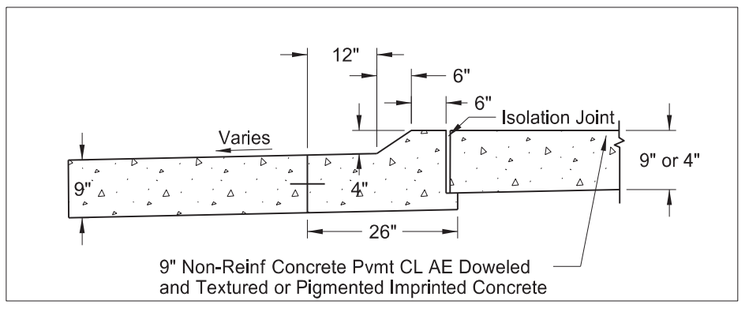

Section B-B

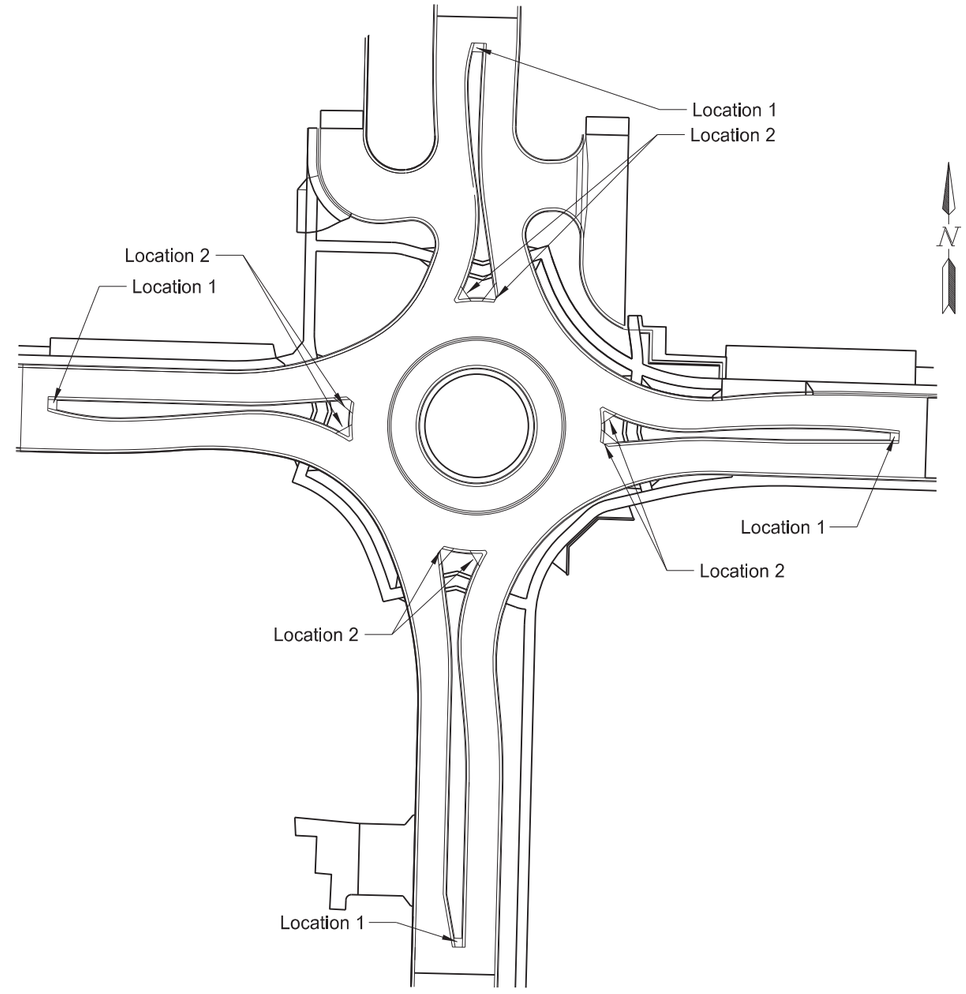

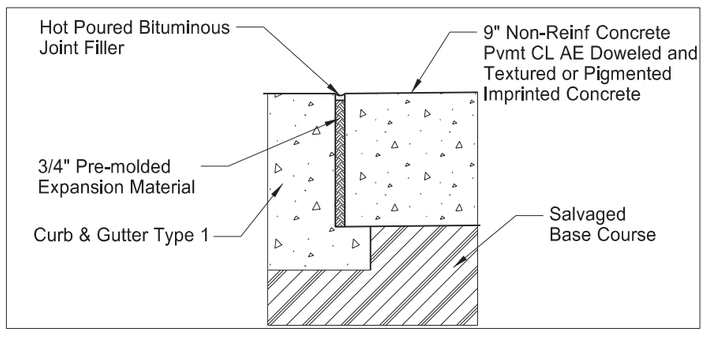

Isolation Joint

General Details

ND 22 and 8th St S Intersection

Median Nose Detail

REGISTERED PROFESSIONAL ENGINEER
DAWN L.S. MICHEL
PE-8029
DATE 2025.12.30 11:35:06 -06'00'
NORTH DAKOTA

STATE	PROJECT NO.	SECTION NO.	SHEET NO.
ND	HEN-5-022(144)069	20	7

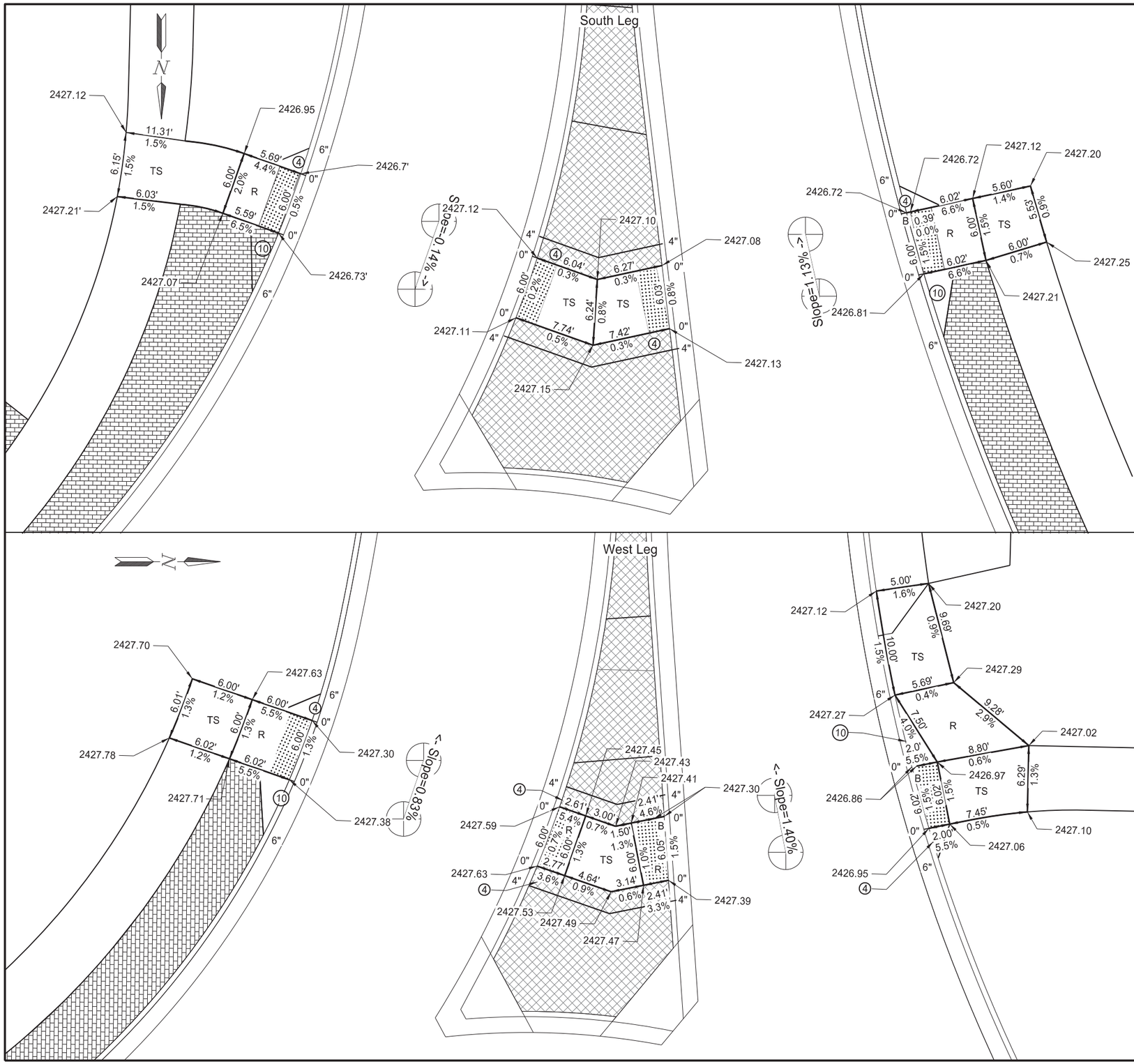

SPEC	CODE	BID ITEM	QTY	UNIT
750	2115	DETECTABLE WARNING PANELS		
		South Leg of Roundabout	12	SF
		South Leg of Roundabout	12	SF
		South Leg of Roundabout	12	SF
		South Leg of Roundabout	12	SF
		West Leg of Roundabout	12	SF
		West Leg of Roundabout	12	SF
		West Leg of Roundabout	12	SF
		West Leg of Roundabout	12	SF

Legend

TS Turning Space
- Slope Maximum of 2.0% / 1.5% Preferred
- All Directions

R Ramp
- Running Slope Less than 8.3% / 5% to 7.5% Preferred
- Cross Slope Maximum of 2.0% / 1.5% Preferred

T Transition Panel
- Slope, PAR Width, and Cross Slope Will Vary

B Bottom Ramp Panel
- Cross Slope Maximum of 2.0% / 1.5% Preferred
- Running Slope Consistent with the EPF

Flare
(10) - Slope Maximum of 10:1
(4) - Slope Maximum of 4:1

DETECTABLE WARNING PANELS

PIGMENTED IMPRINTED CONCRETE

9.0IN NON_REINF CONCRETE PVMT CL AE DOWELED-COLORED & TEXTURED

General Details

ND 22 and 8th St S Intersection

ADA Curb Ramp Layouts

REGISTERED PROFESSIONAL ENGINEER
ALEX E. AUSK
PE-10915
DATE 2025.12.31 06:45:45-06'00'
NORTH DAKOTA

STATE	PROJECT NO.	SECTION NO.	SHEET NO.
ND	HEN-5-022(144)069	20	8

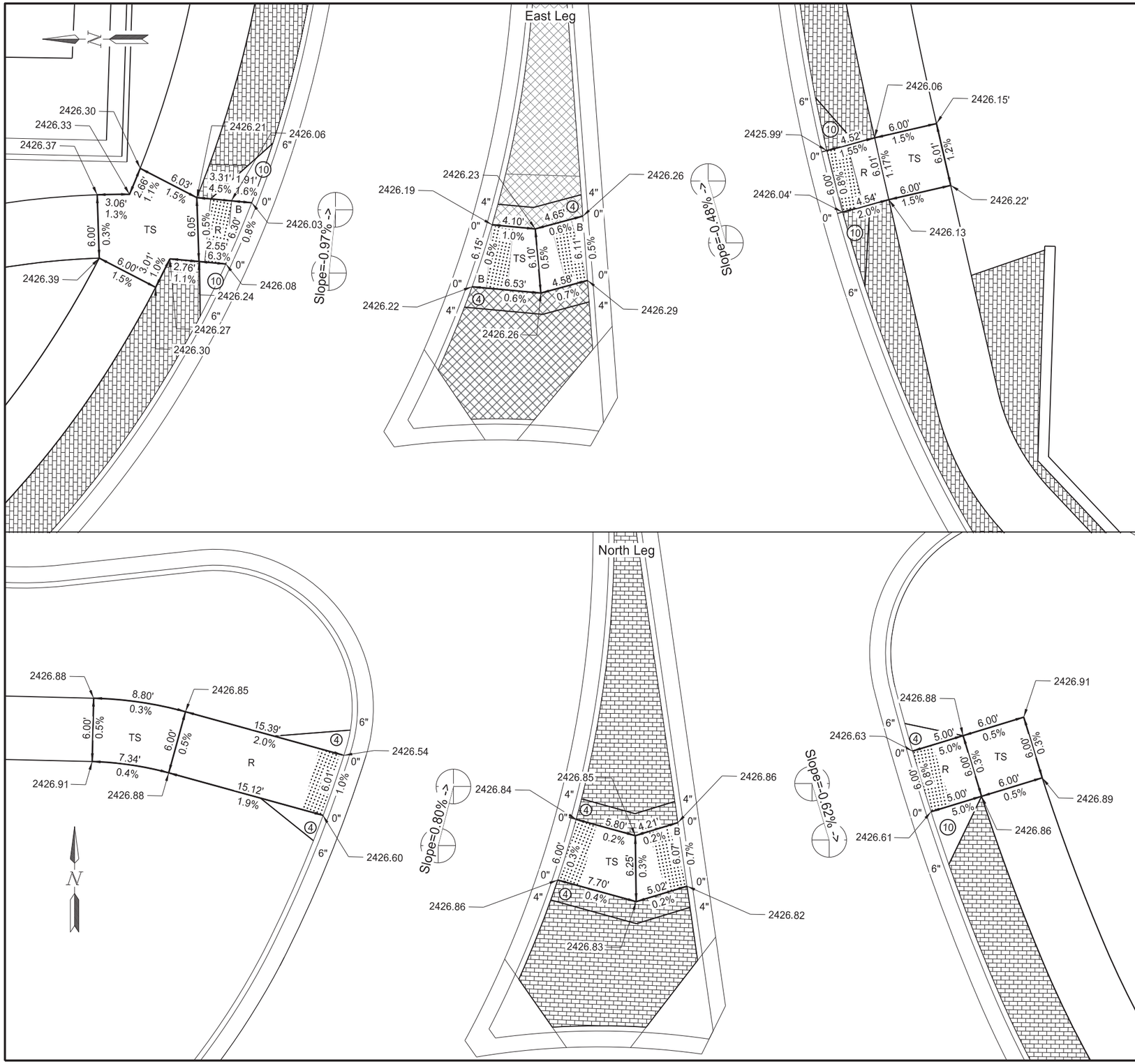

SPEC	CODE	BID ITEM	QTY	UNIT
750	2115	DETECTABLE WARNING PANELS		
		North Leg of Roundabout	12	SF
		North Leg of Roundabout	12	SF
		North Leg of Roundabout	12	SF
		North Leg of Roundabout	12	SF
		East Leg of Roundabout	12	SF
		East Leg of Roundabout	12	SF
		East Leg of Roundabout	12	SF
		East Leg of Roundabout	12	SF

Legend

TS Turning Space
- Slope Maximum of 2.0% / 1.5% Preferred
- All Directions

R Ramp
- Running Slope Less than 8.3% / 5% to 7.5% Preferred
- Cross Slope Maximum of 2.0% / 1.5% Preferred

T Transition Panel
- Slope, PAR Width, and Cross Slope Will Vary

B Bottom Ramp Panel
- Cross Slope Maximum of 2.0% / 1.5% Preferred
- Running Slope Consistent with the EPF

Flare
(10) - Slope Maximum of 10:1
(4) - Slope Maximum of 4:1

DETECTABLE WARNING PANELS

PIGMENTED IMPRINTED CONCRETE

9.0IN NON_REINF CONCRETE PVMT CL AE DOWELED-COLORED & TEXTURED

General Details

ND 22 and 8th St S Intersection

ADA Curb Ramp Layouts

REGISTERED PROFESSIONAL ENGINEER
ALEX E. AUSK
PE-10915
DATE 2025.12.31 06:46:20-06'00'
NORTH DAKOTA

STATE	PROJECT NO.	SECTION NO.	SHEET NO.
ND	HEN-5-022(144)069	20	9

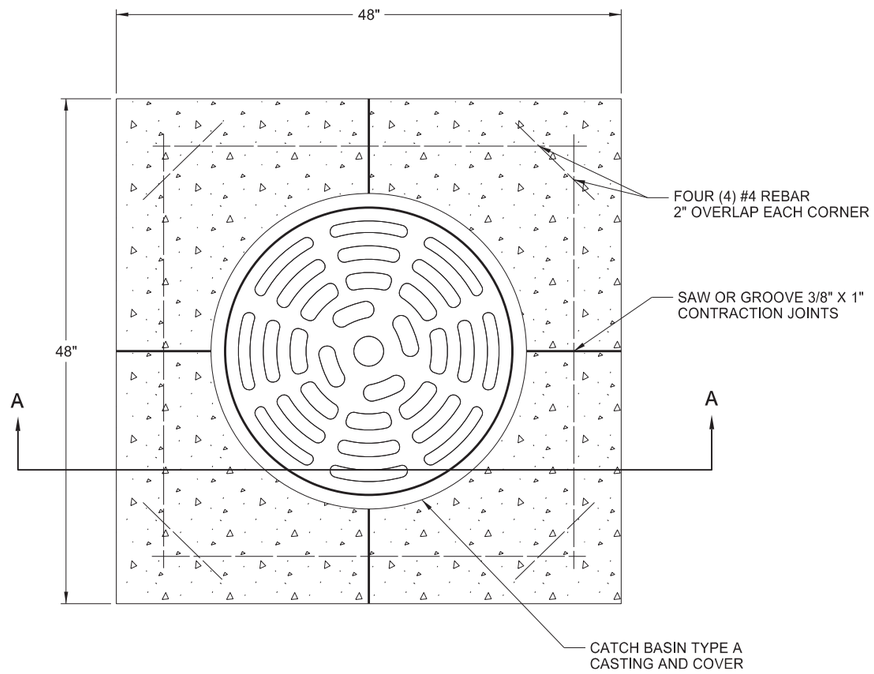

Inlet Catch Basin Type A - Concrete Collar

Structure	Location
ST 3E	Sta 3679+27 - 74' Lt

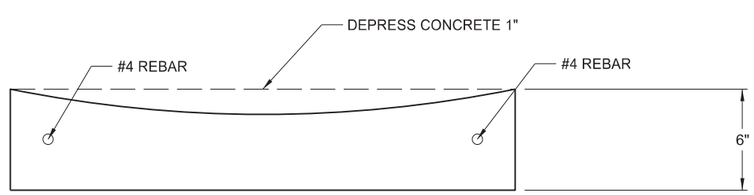

SECTION A-A

General Details

ND 22 and 8th St S Intersection

Inlet Catch Basin Type A - Concrete Collar

REGISTERED PROFESSIONAL ENGINEER
LEVI L CLAGETT
PE-40749
DATE 2025.12.31 14:46:40-06'00'
NORTH DAKOTA

STATE	PROJECT NO.	SECTION NO.	SHEET NO.
ND	HEN-5-022(144)069	20	10

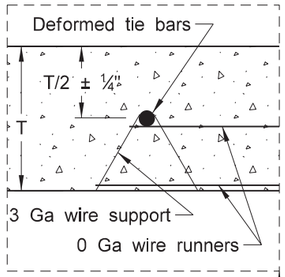

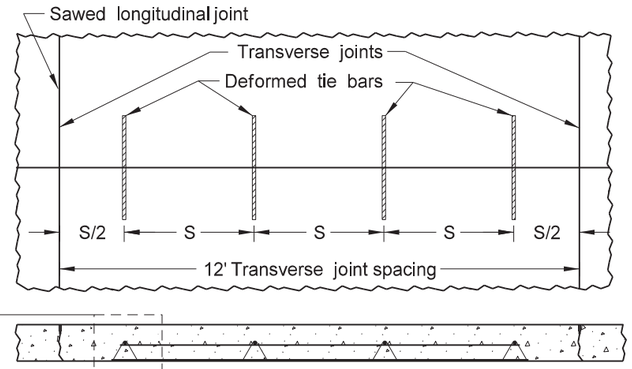

Longitudinal Tie Bar Assembly
(One unit shown)

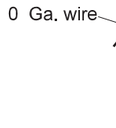

Steel stake

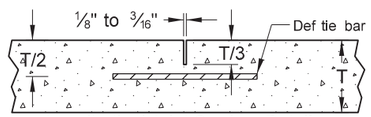

Longitudinal Joint Sawing Detail
(sawed and tied joints)

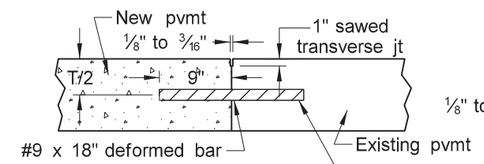

Deformed Bar Installation (2'-0" c to c)
(Transverse Joints)

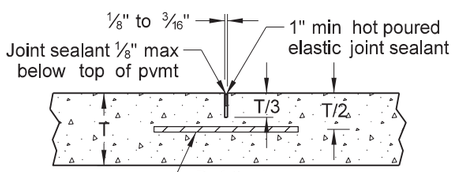

Longitudinal Joint Sealing Detail
(sawed and tied joints)

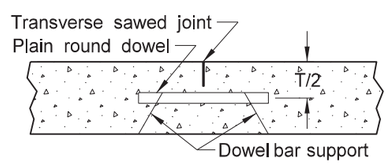

Doweled Transverse Joint

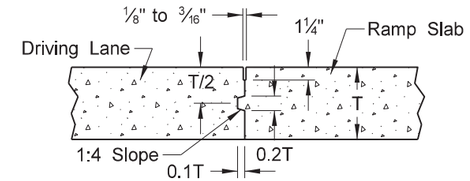

Longitudinal Joint Sawing Detail
(at ramps - non-tied keyed joints)

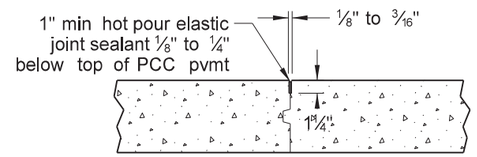

Longitudinal Joint Sealing Detail
(non-tied keyed joints)

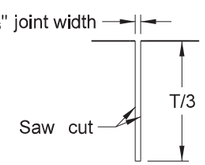

Transverse Joint Sawing

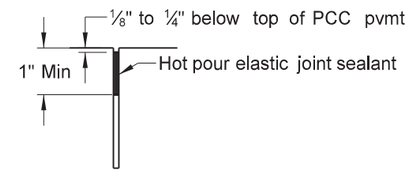

Transverse Joint Sealing

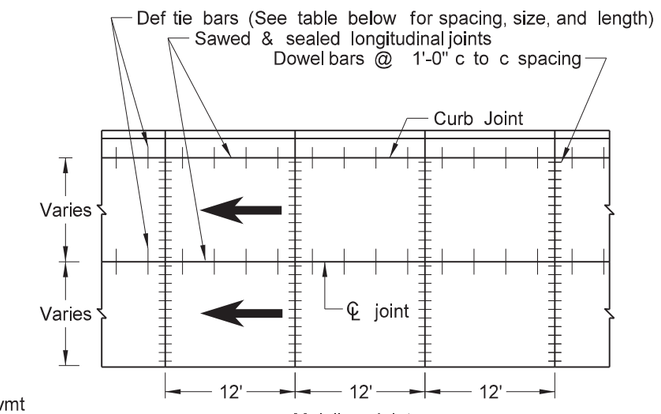

Mainline Joints
12' joint spacing

Transverse Joint Dowel Bars

Joint Location	Dia x Length
ML	1.25" x 18"

Notes:

1. S = Tiebar spacing
2. T = Pavement thickness
3. Place dowels in ramp tapers also.
4. Place no tie bar within 15" of a transverse joint.

Grade 40 Longitudinal Joint Tie Bars	
PCC Depth	9"
Mainline Centerline	
Bar Size x Length (S=30")	#5 x 30"
Bar Size x Length (S=45")	#6 x 36"
Curb Joint	
Bar Size x Length (S=30")	#4 x 24"
Bar Size x Length (S=45")	#5 x 30"

Grade 60 Longitudinal Joint Tie Bars	
PCC Depth	9"
Mainline Centerline	
Bar Size x Length (S=30")	#4 x 36"
Bar Size x Length (S=45")	#5 x 42"
Curb Joint	
Bar Size x Length (S=30")	#3 x 30"
Bar Size x Length (S=45")	#4 x 36"

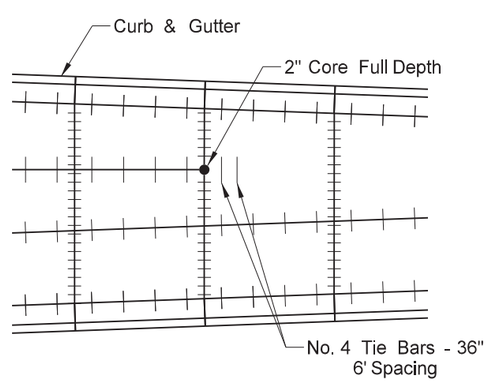

Joint Termination
Core Hole

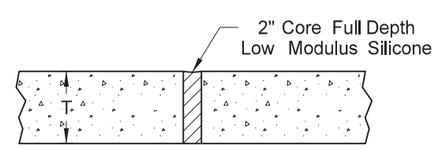

General Detail

ND 22 and 8th St S Intersection

PCC Pavement - Perpendicular Joints @ 12' Spacing

REGISTERED PROFESSIONAL ENGINEER
DALTON DRYBURGH
PE-30116
DATE 2026.01.02 10:05:16 -06'00'
NORTH DAKOTA

STATE	PROJECT NO.	SECTION NO.	SHEET NO.
ND	HEN-5-022(144)069	20	11

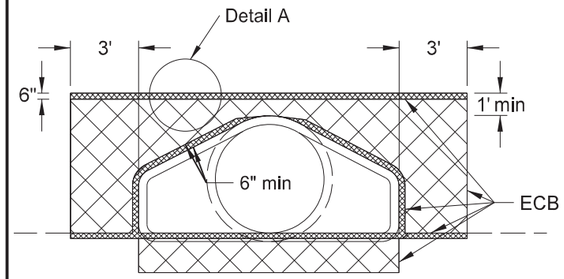

FRONT VIEW

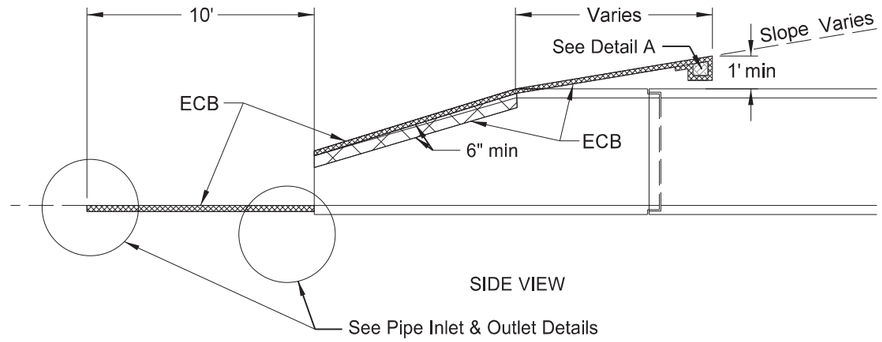

SIDE VIEW

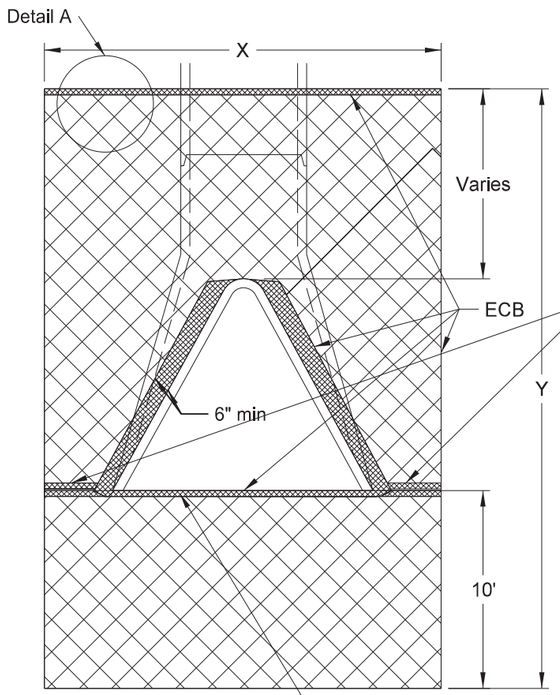

TOP VIEW

Inlet side - see applicable detail for pipe inlet.
Outlet side - see applicable detail for pipe outlet.

Tuck this end a minimum of 6" into the embankment.

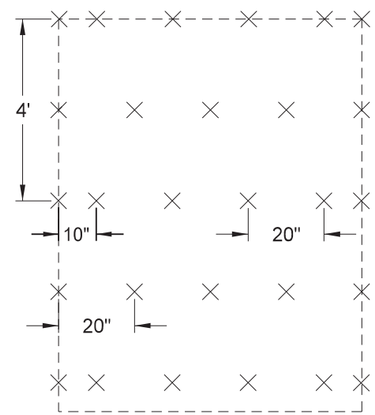

STAPLE PATTERN

NOTE: Tuck the ECB a minimum of 6" into the embankment (against the flared end section) around the opening of the flared end section.

255 0103 ECB TYPE 3							
Location of Surface Area to be Protected					Pipe Diameter	Unit Quantity	Total Quantity
Alignment	Station	Loc	Offset	No	In	SY	SY
HEN-5-022(144)069							
SCL22	3674+18	Appr	Lt	1	30	27	27
HEN-5-022(144)069 Subtotal:							27

APPROACH CULVERTS				
DIA	X	Y	Surface area to be protected	ECB
In	Ft	Ft	SF	SY
30	11.6	22.5	241.5	27
Note: Quantities based on 8:1 slope.				

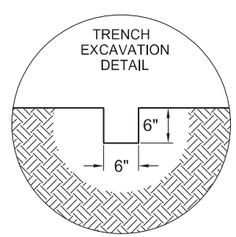

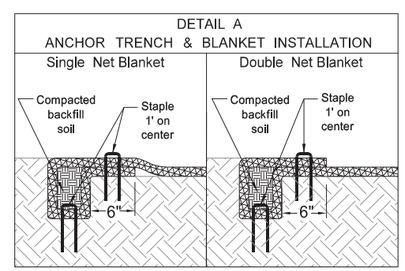

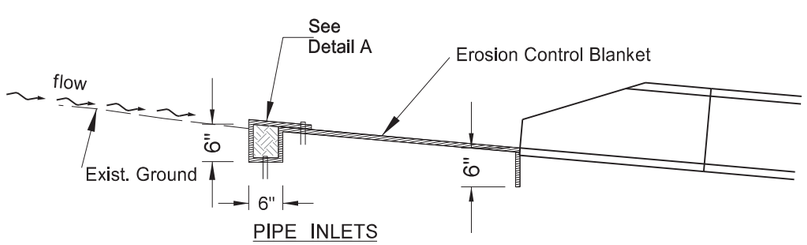

PIPE INLETS

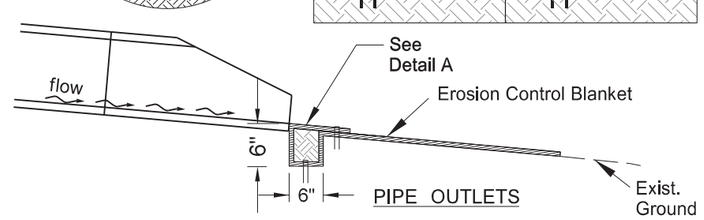

PIPE OUTLETS

General Details

ND 22 and 8th St S Intersection

Erosion Control at Culvert Flared End Sections

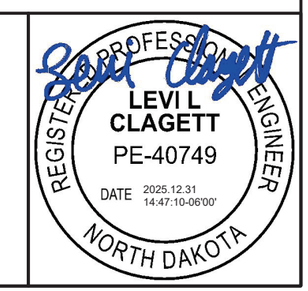

STATE	PROJECT NO.	SECTION NO.	SHEET NO.
ND	HEN-5-022(144)069	20	12

Note: Match exisiting edge of pavement where bypass abuts existing pavement.

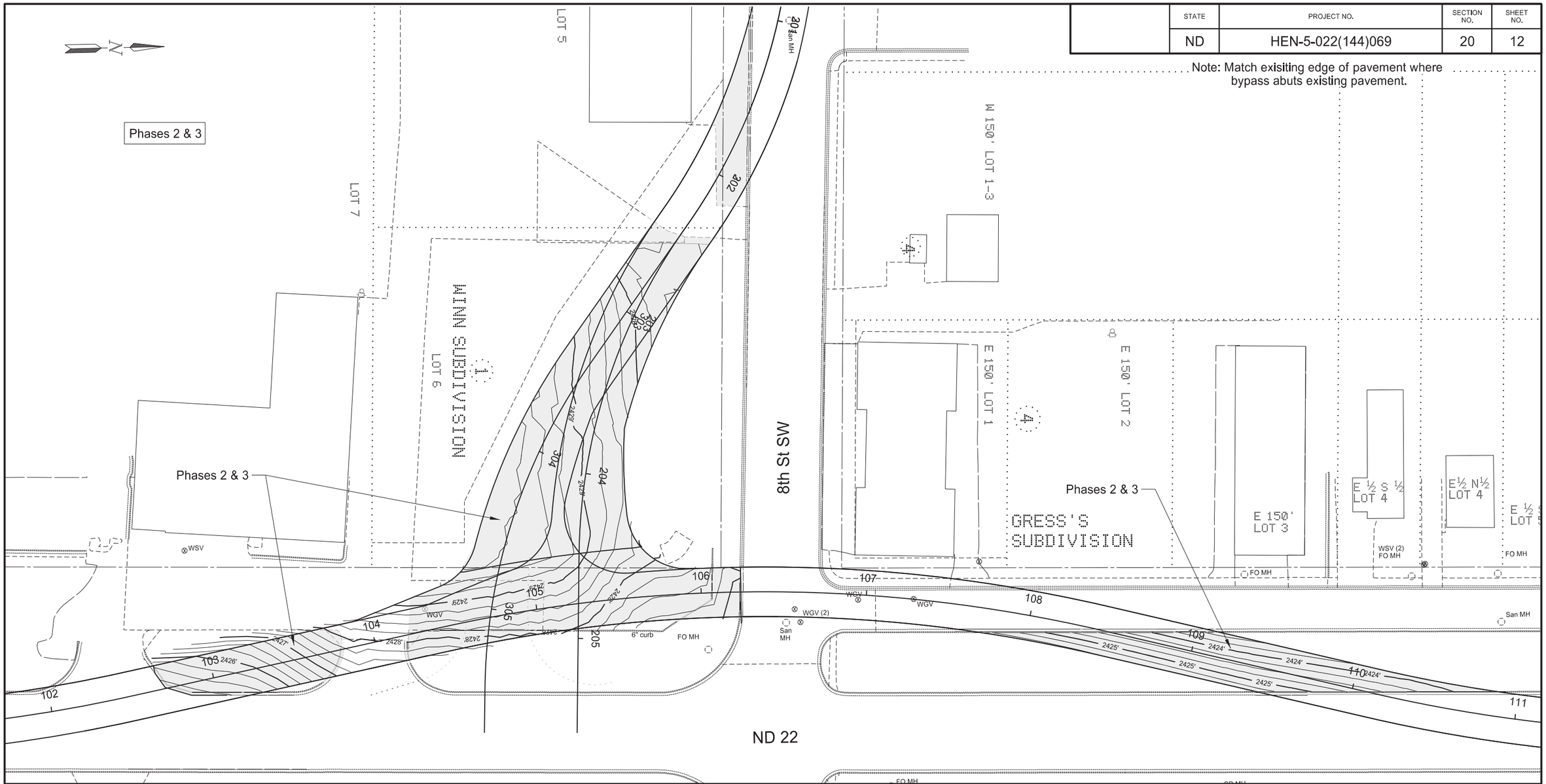

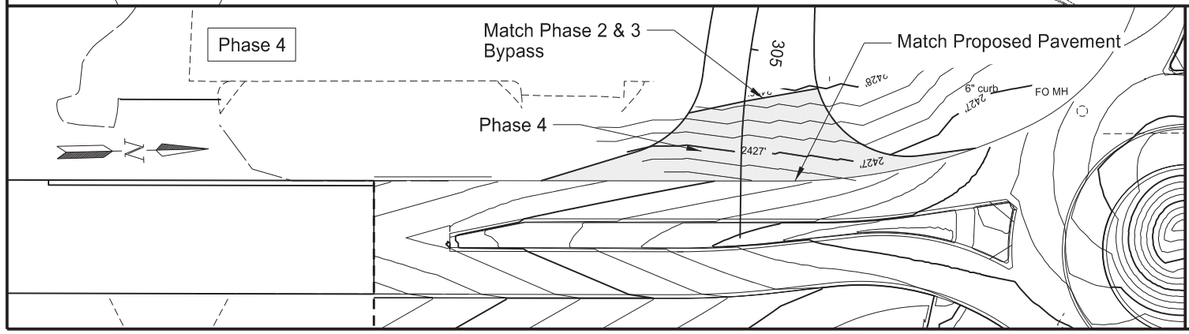

General Details

ND 22 and 8th St S Intersection

Temporary Bypass Paving

REGISTERED PROFESSIONAL ENGINEER
DAWN L.S. MICHEL
PE-8029
DATE 2025.12.30 11:35:26 -06'00'
NORTH DAKOTA

STATE	PROJECT NO.	SECTION NO.	SHEET NO.
ND	HEN-5-022(144)069	20	13

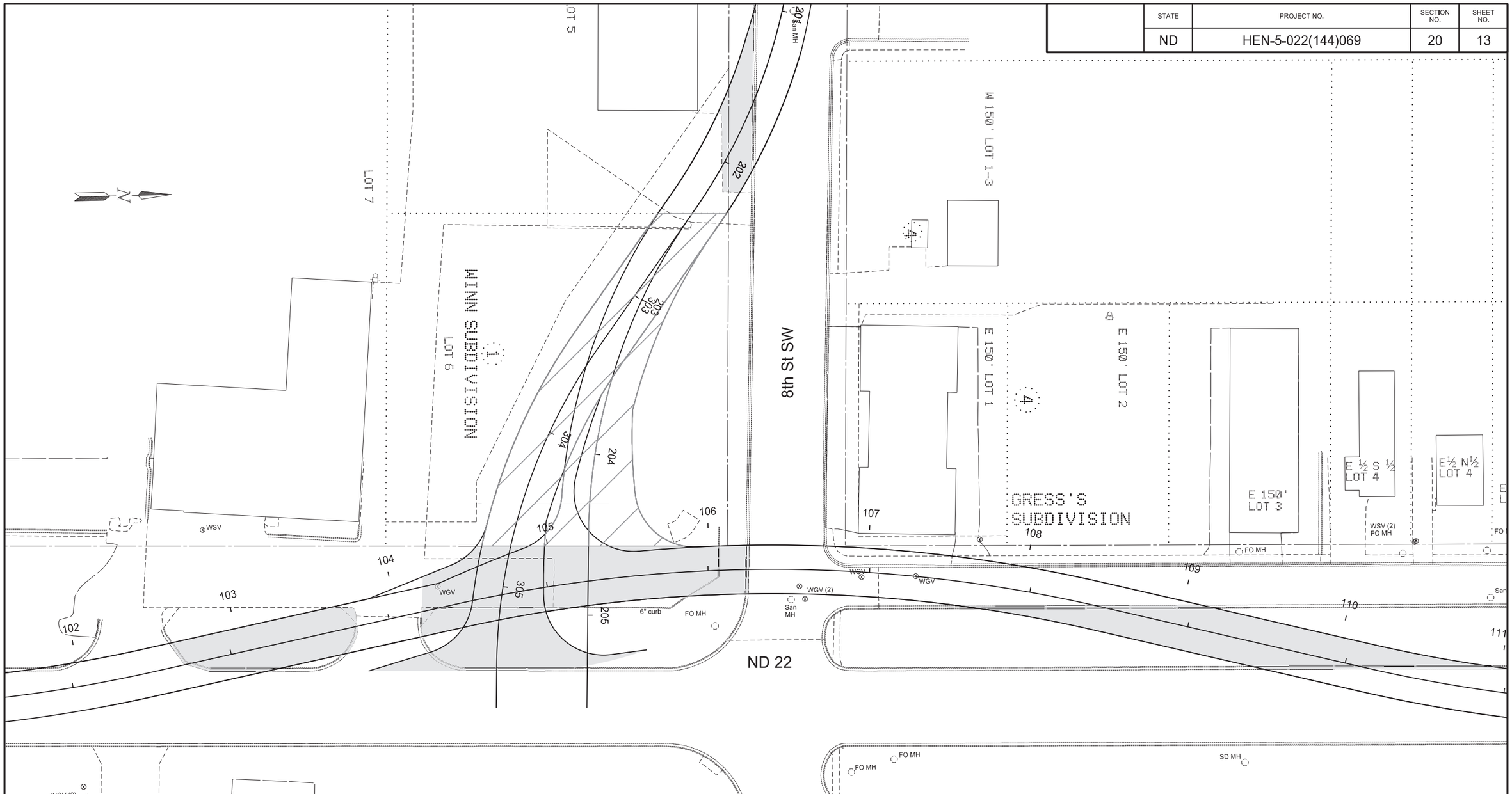

Legend

Removal of Pavement (Bituminous)

Bypass Pavement to Remain in Place

General Details

ND 22 and 8th St S Intersection

Temporary Bypass Removal

REGISTERED PROFESSIONAL ENGINEER
DAWN L.S. MICHEL
PE-8029
DATE 2025.12.30 11:35:43 -06'00'
NORTH DAKOTA

STATE	PROJECT NO.	SECTION NO.	SHEET NO.
ND	HEN-5-022(144)069	20	14

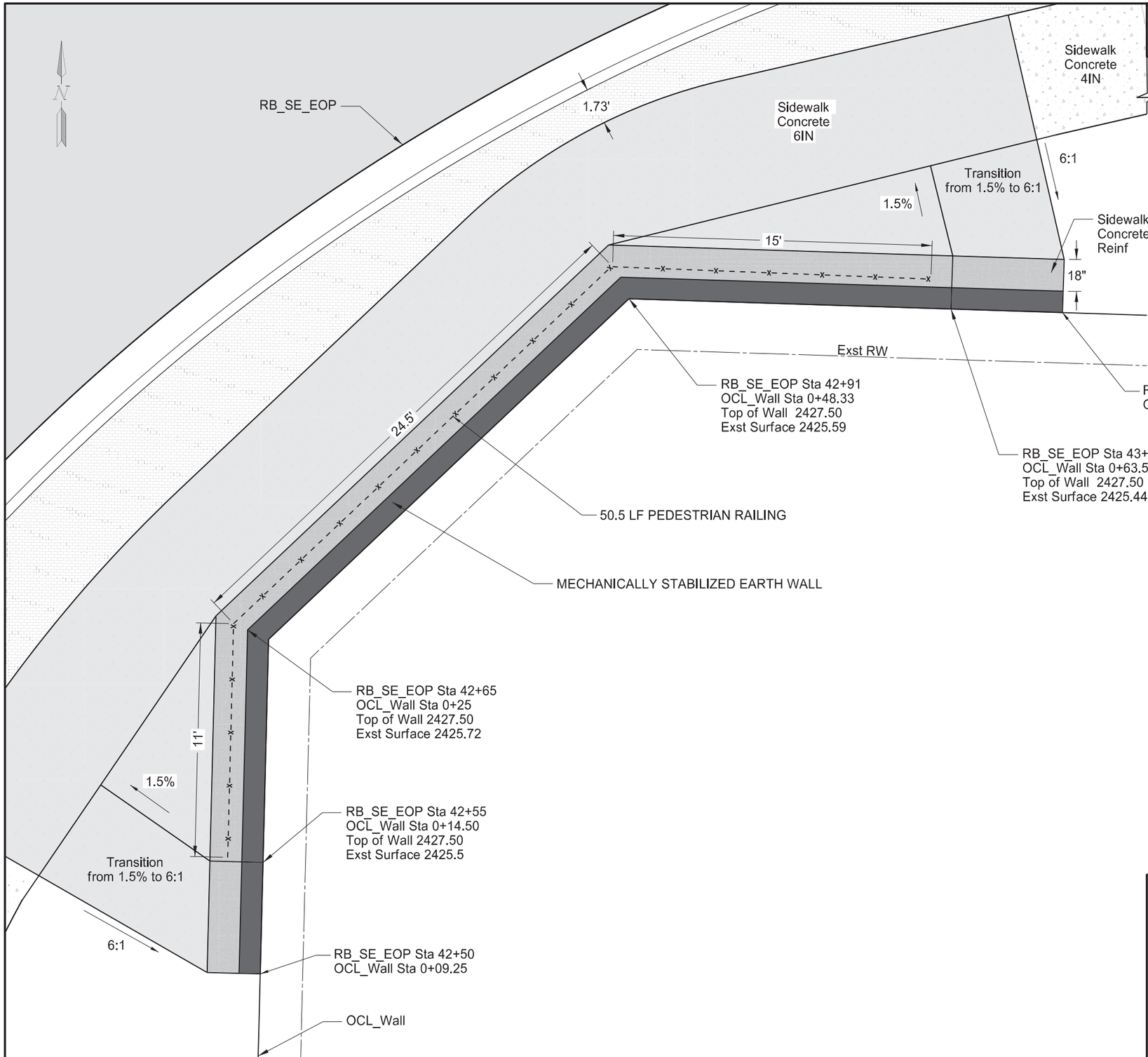

SPEC	CODE	BID ITEM	QTY	UNIT
624	0123	PEDESTRIAN RAILING		
		Sta 42+44 - Sta 43+16 (RB_SE_EOP)	50.5	LF
750	0101	SIDEWALK CONCRETE REINF		
		Sta 42+44 - Sta 43+16 (RB_SE_EOP)	11	SY
930	9550	MECHANICALLY STABILIZED EARTH WALL		
		Sta 42+44 - Sta 43+16 (RB_SE_EOP)	108	SF

General Details

ND 22 and 8th St S Intersection

Mechanically Stabilized Earth Wall

REGISTERED PROFESSIONAL ENGINEER
MICHAEL HULSTEIN
PE-29767
DATE 2026.01.02 09:10:26-06'00'
NORTH DAKOTA

STATE	PROJECT NO.	SECTION NO.	SHEET NO.
ND	HEN-5-022(144)069	20	15

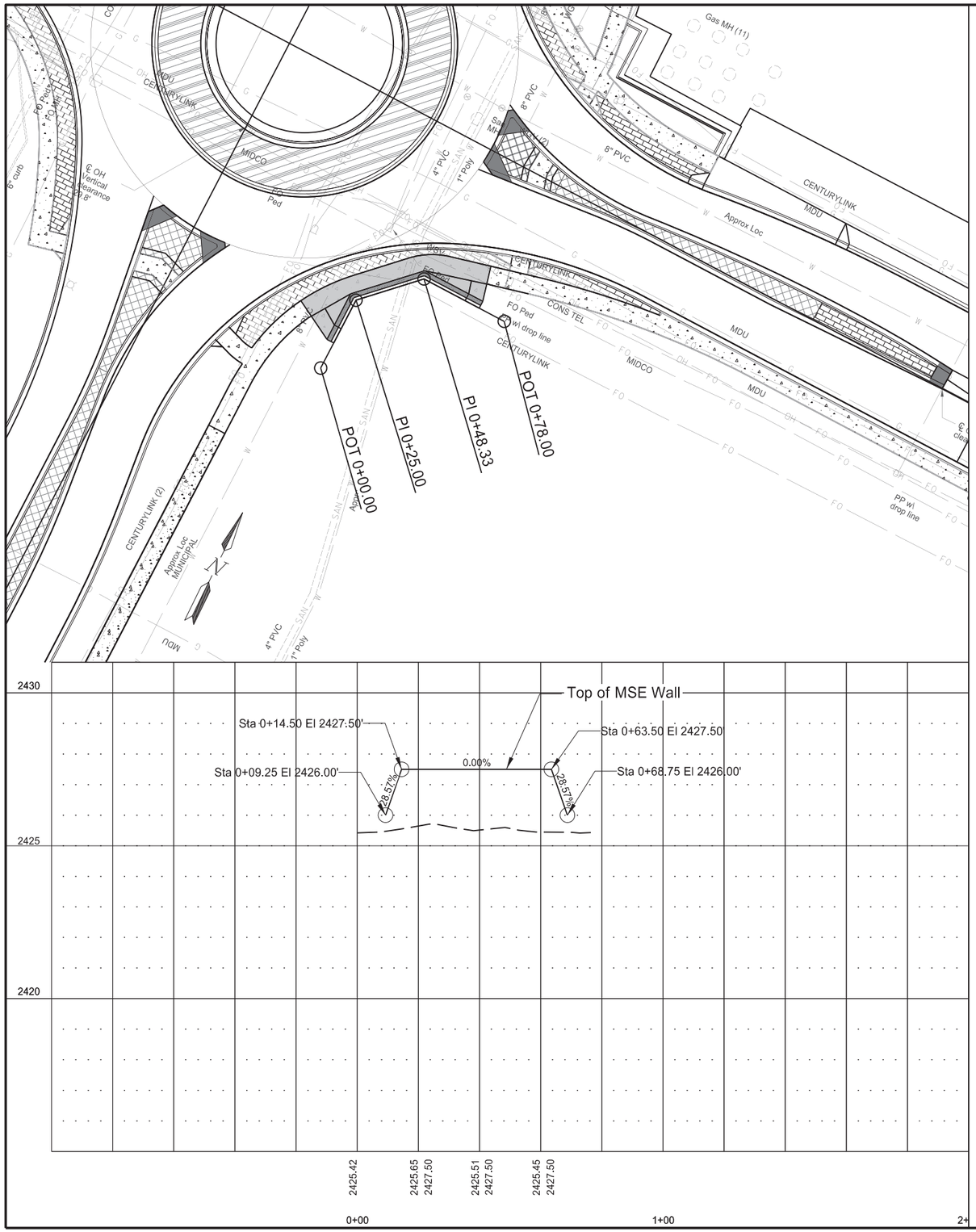

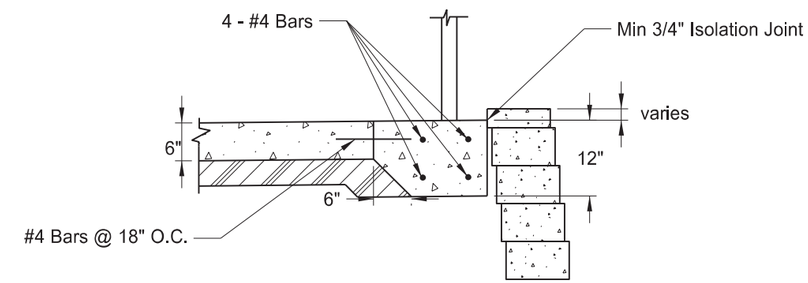

Detail A

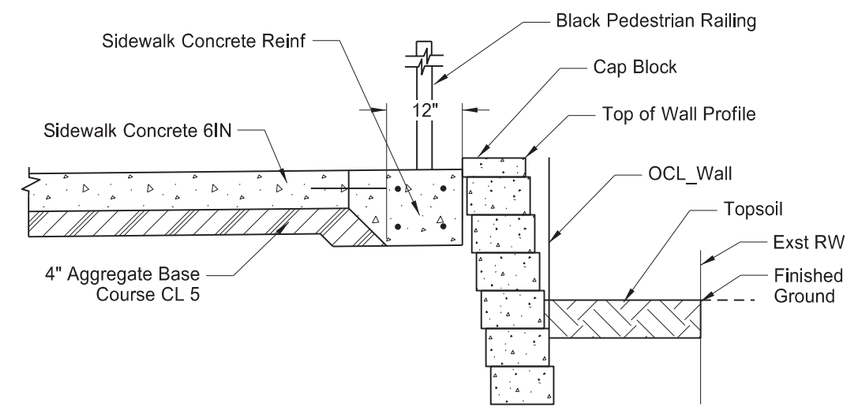

Detail B

Note:

1. Detail B for information purposes only. Items including but not limited to retained backfill, drainage, reinforcement, leveling pad, and wall base to be the responsibility of the Wall Designer. Refer to special provision for design, construction and payment specifications for the bid item "Mechanically Stabilized Earth Wall".

2. Plan quantity is based on the exposed face of the wall.

General Details

ND 22 and 8th St S Intersection

Mechanically Stabilized Earth Wall

REGISTERED PROFESSIONAL ENGINEER
MICHAEL HULSTEIN
PE-29767
DATE 2026.01.02 09:11:33-06'00'
NORTH DAKOTA

STATE	PROJECT NO.	SECTION NO.	SHEET NO.
ND	HEN-5-022(144)069	20	16

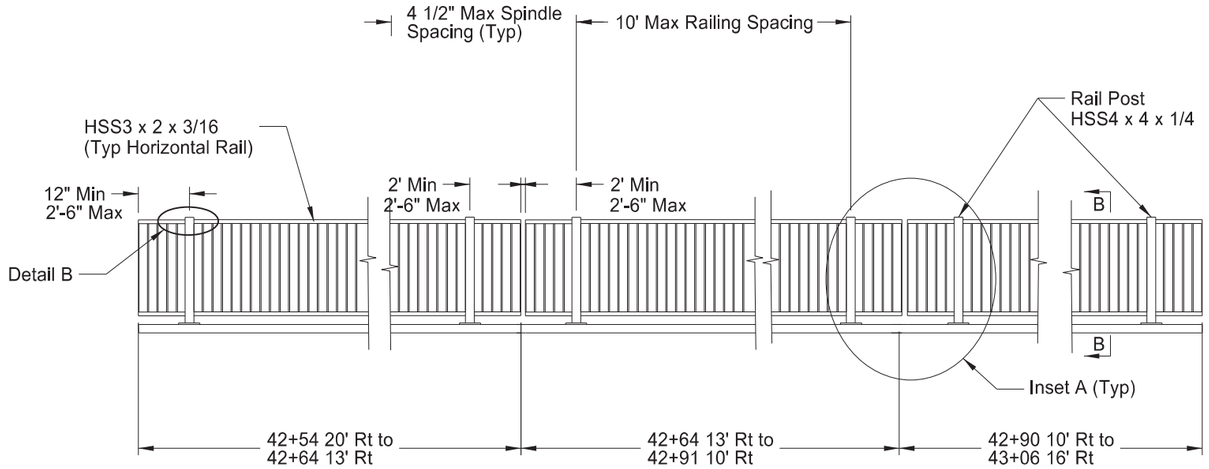

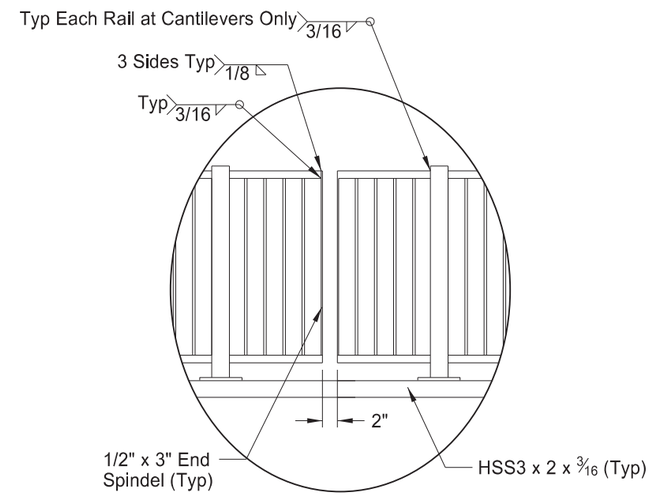

Inset A

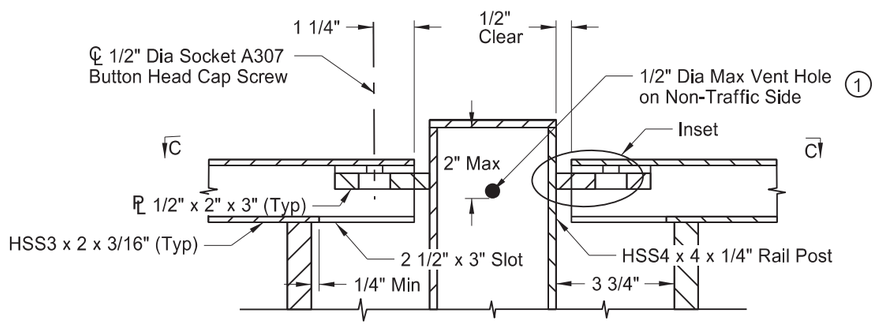

Inset B

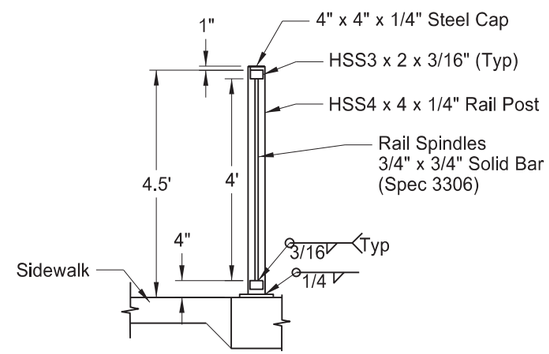

Section B-B

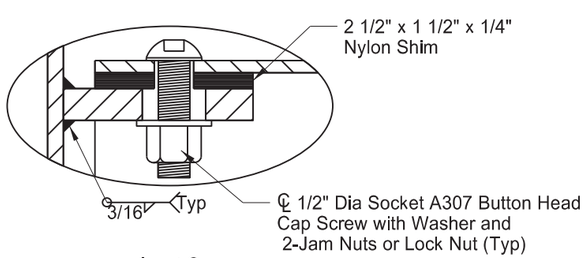

Inset C

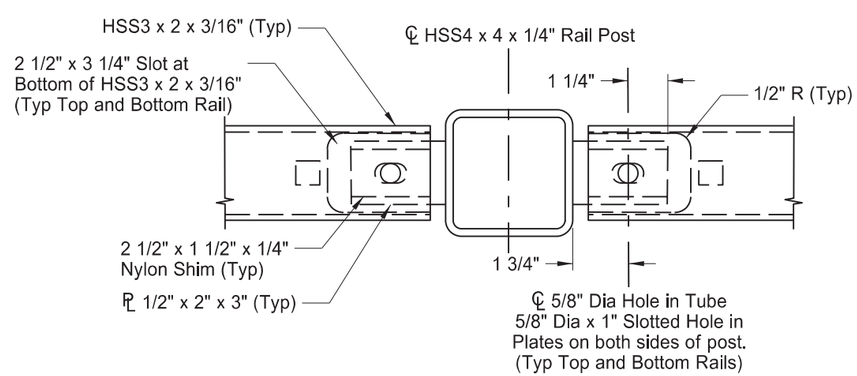

Section C-C

General Notes

1. Drill vent hole in the rail post within 2" of the underside of the cap, on the non-traffic side of the post. Maximum hole size is 1/2" Dia.

General Details

ND 22 and 8th St S Intersection

Pedestrian Railing Detail

REGISTERED PROFESSIONAL ENGINEER
MICHAEL HULSTEIN
PE-29767
DATE 2026.01.02 09:12:40-06'00'
NORTH DAKOTA

STATE	PROJECT NO.	SECTION NO.	SHEET NO.
ND	HEN-5-022(144)069	20	17

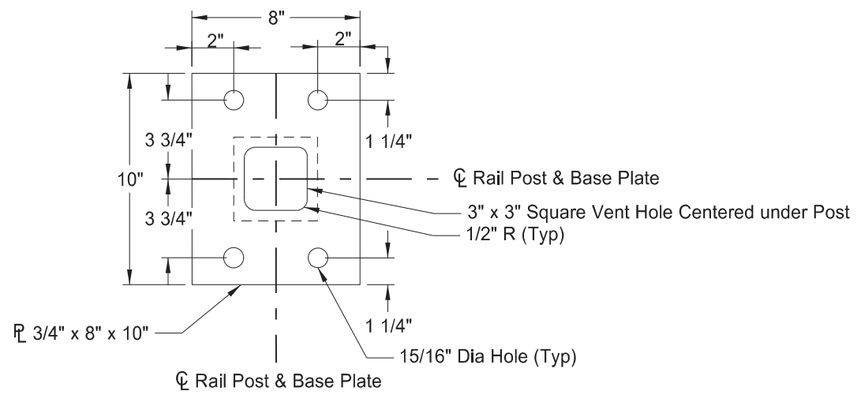

Base Plate Detail

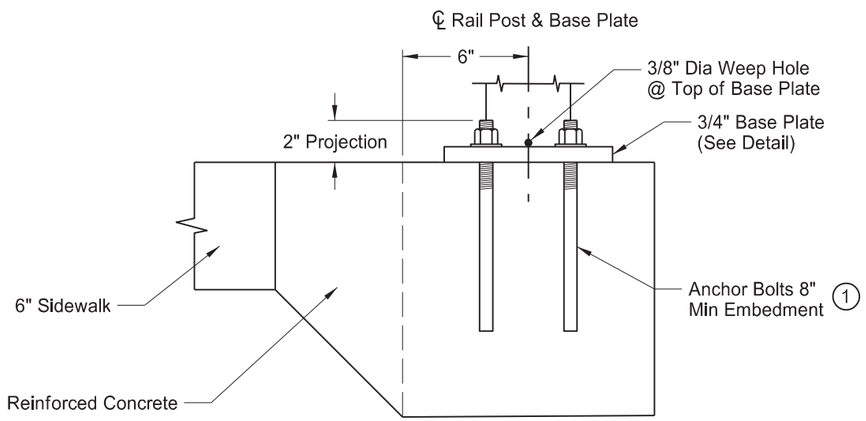

Anchor Detail

General notes

Payment length is measured as the out-to-out length along the centerline of the railing between the outside ends.

Provide Square Structural Steel rail elements in acordance with ASTM A-500 Grade B.

Fabricate Railing to the horizontal and vertical alignment of the structure.

Galvanize all bolts and anchor bolts to AASHTO M232.

Hot Dip Galvanize all structural steel fasteners after fabrication according to AASHTO M111.

Pedestrian Railing to be powder coated black. Apply polyester powder at a min. 2 mil thickness with a direct/indirect impact ragting of 160 in-lbs (ASTM D2794). Apply a clear coat to maintain the appearance and prevent oxidation.

1 Drill vent hole in the rail post within 2" of the underside of the cap, on the non-traffic side of the post. Maximum hole size is 1/2" Dia.

Adhesive anchor with 5/8" dia. Anchor rod in accordance with ASTM A-449 with hex nut and washer. Provide an adhesive with a minimum characteristic bond strength in uncracked concrete of 1.5 ksi. Embed the anchor no less then 8" regardless of characteristic bond strength. Drill through reinforcement (if encountered) to achieve minimum embedment. Ensure hex nut is in contact with the adjacent surface and torque to 60 ft-lbs unless a higher torque is recommended by the manufacturer. Proof load to 8.8 kips. Refer to the approved/qualified products list and the special provisions for additional requirements.

General Details

ND 22 and 8th St S Intersection

Pedestrian Railing Detail

REGISTERED PROFESSIONAL ENGINEER
MICHAEL HULSTEIN
PE-29767
DATE 2026.01.02 09:13:44-06'00'
NORTH DAKOTA

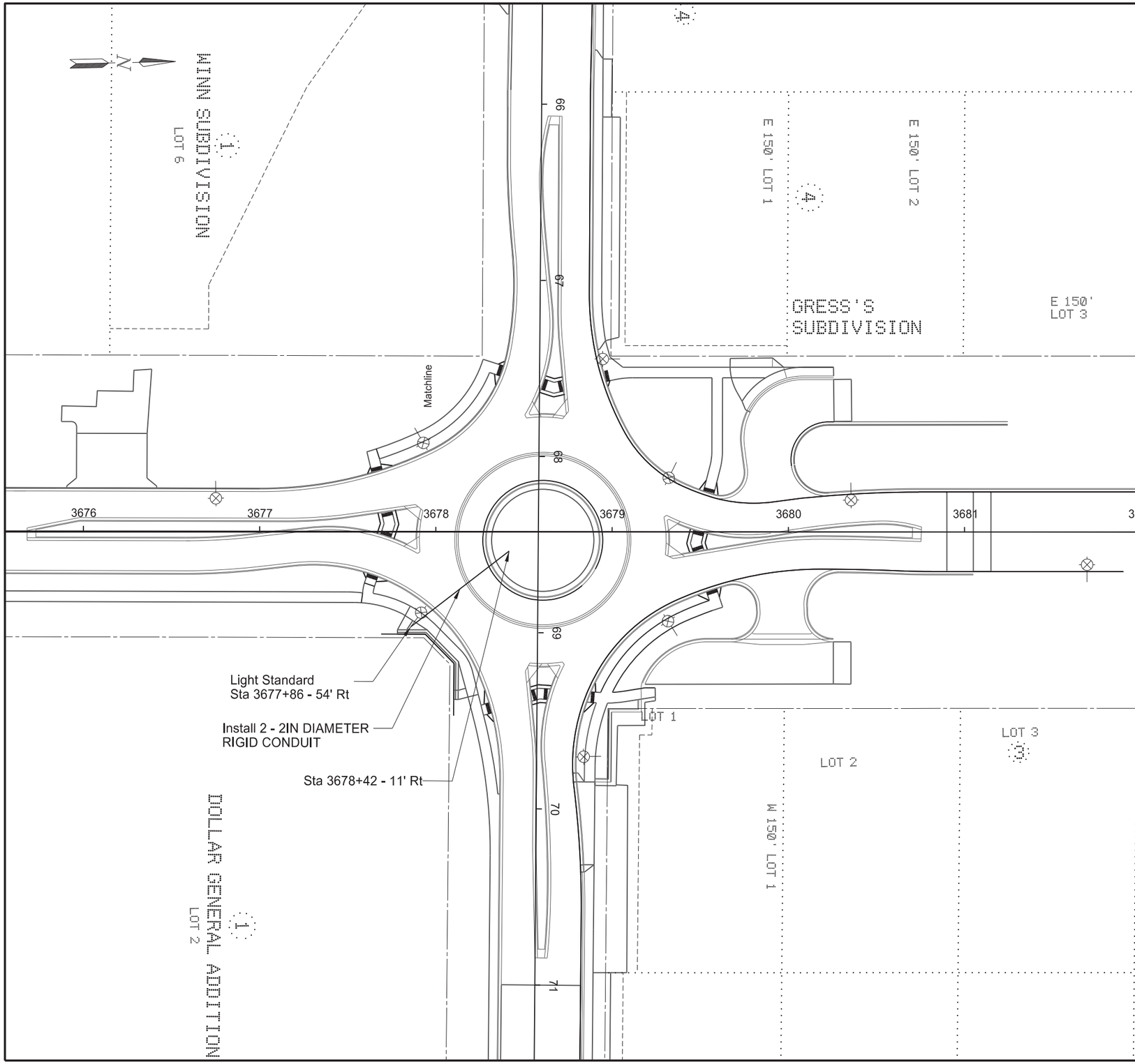

STATE	PROJECT NO.	SECTION NO.	SHEET NO.
ND	HEN-5-022(144)069	20	18

SPEC	CODE	BID ITEM	QTY	UNIT
Local Only				
770	0330	2IN DIAMETER RIGID CONDUIT		
		Sta 3677+86 54' Rt to Sta 3678+57 2' Rt	140	LF

Notes

1. Install two condiuts from 1' outside the light base to the roundabout. Install bends to extend condiut ends 1' above proposed ground. Install a tracer wire and cap both ends.

Conduit Layout
(Future Use)

ND 22 & 8th St S Intersection

Sta 3678+00 to Sta 3684+00

REGISTERED PROFESSIONAL ENGINEER
JASON P GULLICKS
PE-4792
DATE 2025.12.30
11:39:53 -06'00'
NORTH DAKOTA

STATE	PROJECT NO.	SECTION NO.	SHEET NO.
ND	HEN-5-022(144)069	30	1

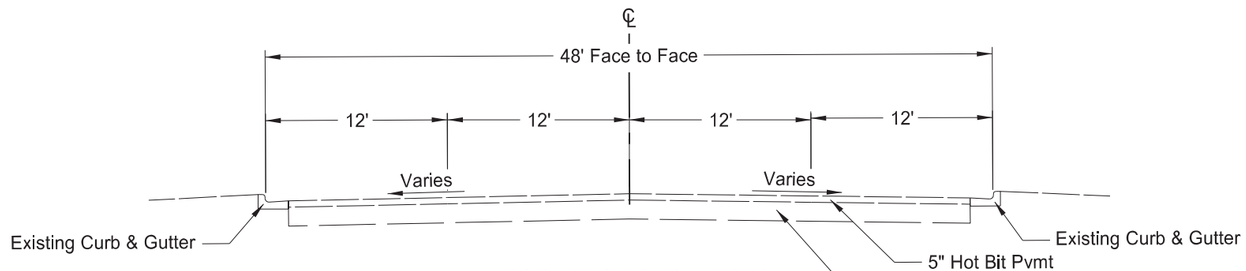

Existing Typical Section - ND 22
Sta 3673+44 to Sta 3681+15

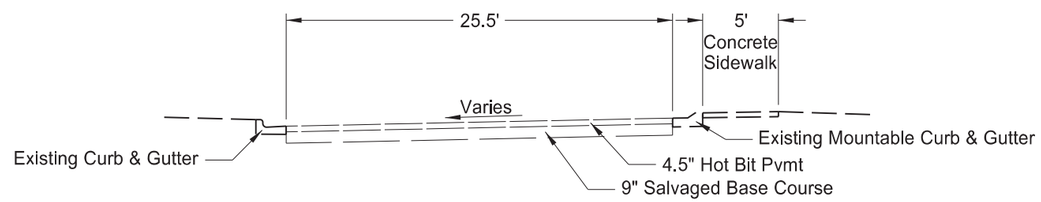

Existing Typical Section - West Frontage Road
Sta 3679+19.50 to Sta 3680+36

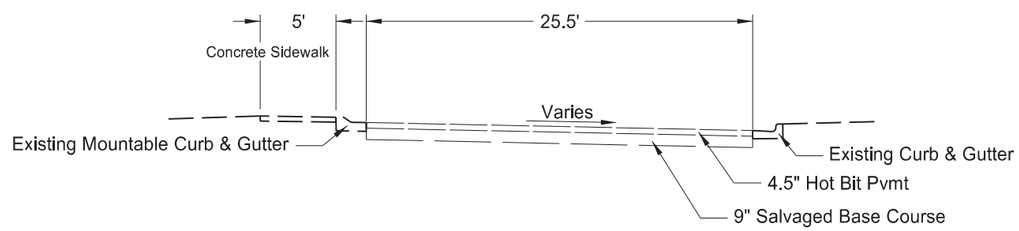

Existing Typical Section - East Frontage Road
Sta 3678+84 to Sta 3680+35

Typical Sections

ND 22 and 8th St S Intersection

REGISTERED PROFESSIONAL ENGINEER
DAWN L.S. MICHEL
PE-8029
DATE 2025.12.18 08:52:13 -06'00'
NORTH DAKOTA

STATE	PROJECT NO.	SECTION NO.	SHEET NO.
ND	HEN-5-022(144)069	30	2

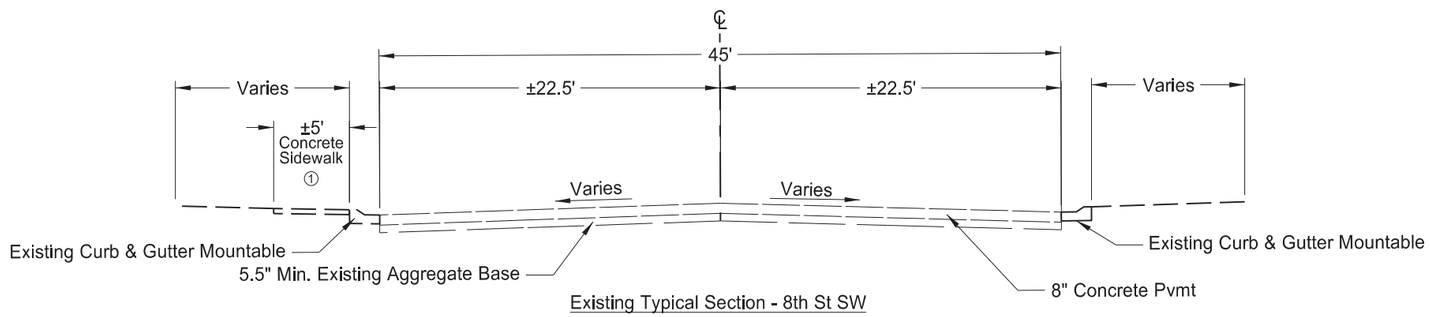

Existing Typical Section - 8th St SW
Sta 65+42 to Sta 68+01

① Existing sidewalk present from Sta 65+83 to Sta 66+01

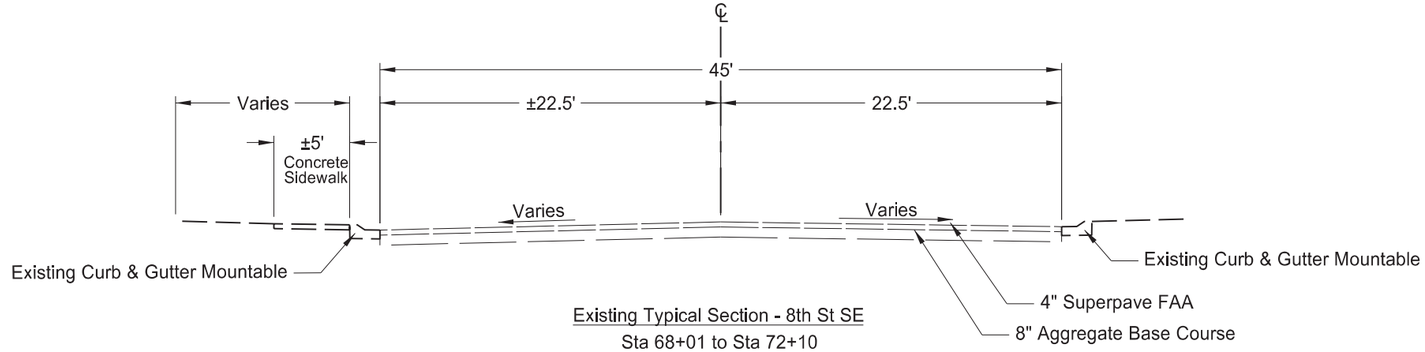

Existing Typical Section - 8th St SE
Sta 68+01 to Sta 72+10

Typical Sections

ND 22 and 8th St S Intersection

REGISTERED PROFESSIONAL ENGINEER
DAWN L.S. MICHEL
PE-8029
DATE 2025.12.18 08:52:30 -06'00'
NORTH DAKOTA

STATE	PROJECT NO.	SECTION NO.	SHEET NO.
ND	HEN-5-022(144)069	30	3

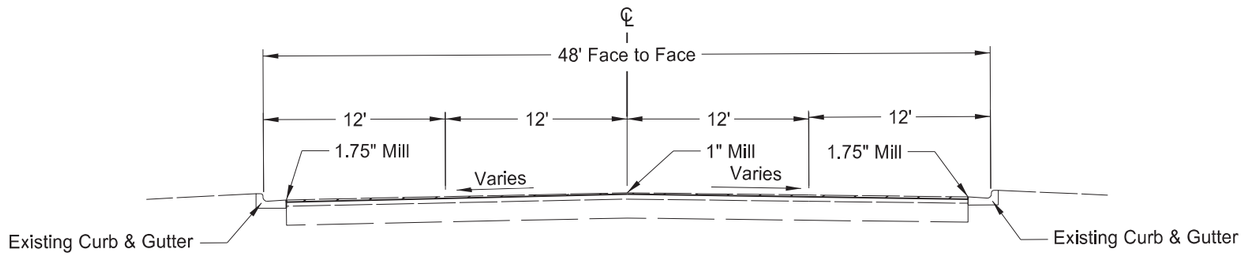

Milling Typical Section - ND 22
Sta 3673+44 to Sta 3675+38

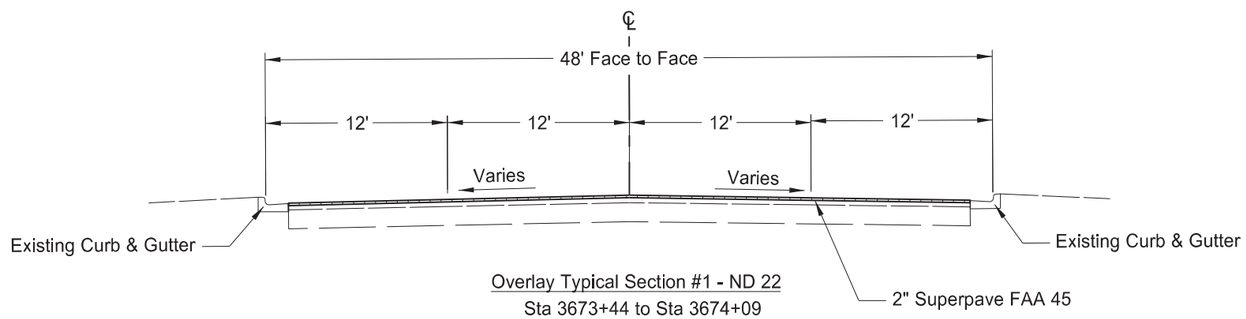

Overlay Typical Section #1 - ND 22
Sta 3673+44 to Sta 3674+09

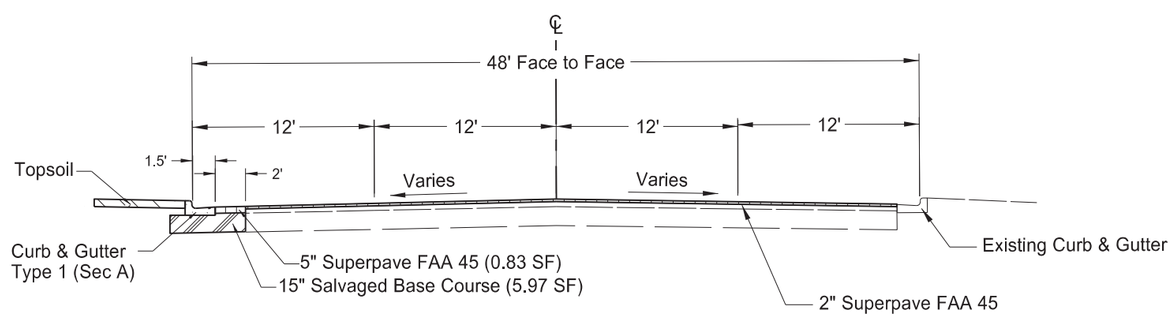

Overlay Typical Section #2 - ND 22
Sta 3674+09 to Sta 3675+38

Typical Sections

ND 22 and 8th St S Intersection

REGISTERED PROFESSIONAL ENGINEER
DAWN L.S. MICHEL
PE-8029
DATE 2025.12.18 08:52:59 -06'00'
NORTH DAKOTA

STATE	PROJECT NO.	SECTION NO.	SHEET NO.
ND	HEN-5-022(144)069	30	4

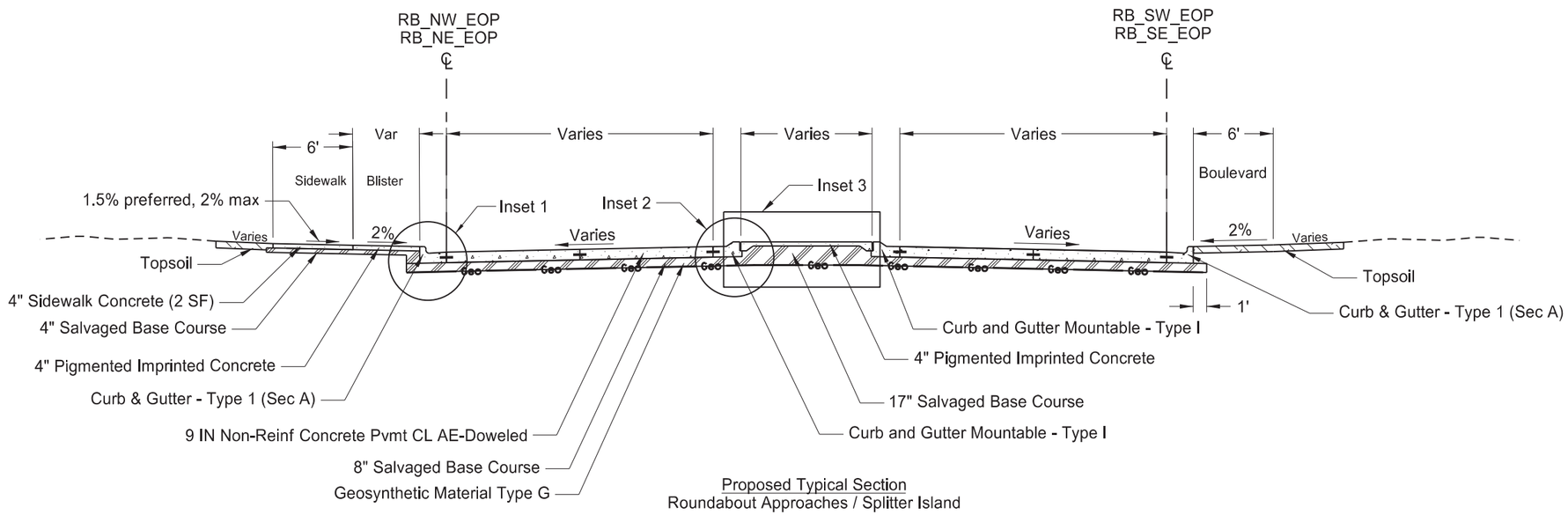

Proposed Typical Section
Roundabout Approaches / Splitter Island

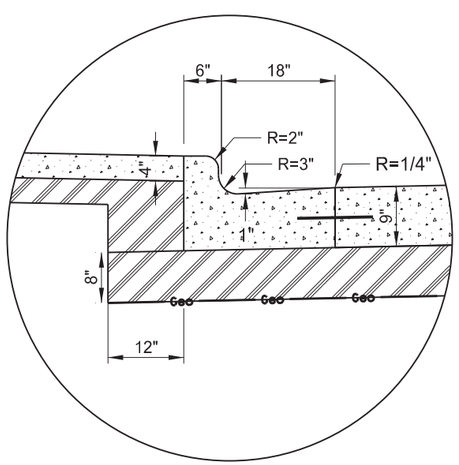

Inset 1
Curb & Gutter Type 1 (Sec A)

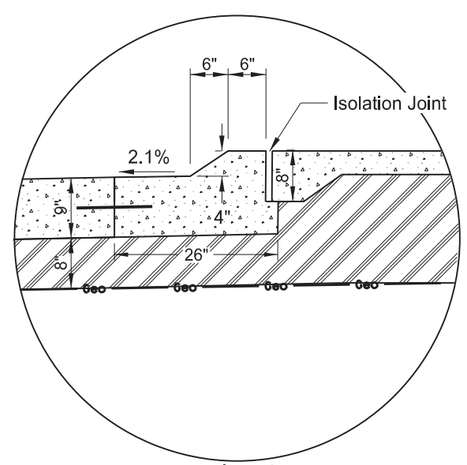

Inset 2
Curb & Gutter Mountable - Type I
(Splitter Island Curb & Gutter)

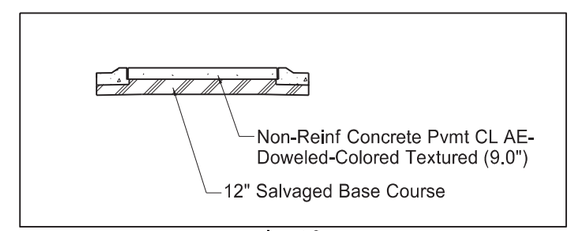

Inset 3

Alternate Splitter Island (See Section 20)
RB_NW_EOP Sta 11+51 to Sta 12+76
RB_SW_EOP Sta 20+51 to Sta 24+98
RB_NE_EOP Sta 32+25 to Sta 33+34
RB_SE_EOP Sta 40+80 to Sta 44+19

Typical Sections

ND 22 and 8th St S Intersection

REGISTERED PROFESSIONAL ENGINEER
DAWN L.S. MICHEL
PE-8029
DATE 2025.12.18 08:53:12 -06'00'
NORTH DAKOTA

STATE	PROJECT NO.	SECTION NO.	SHEET NO.
ND	HEN-5-022(144)069	30	5

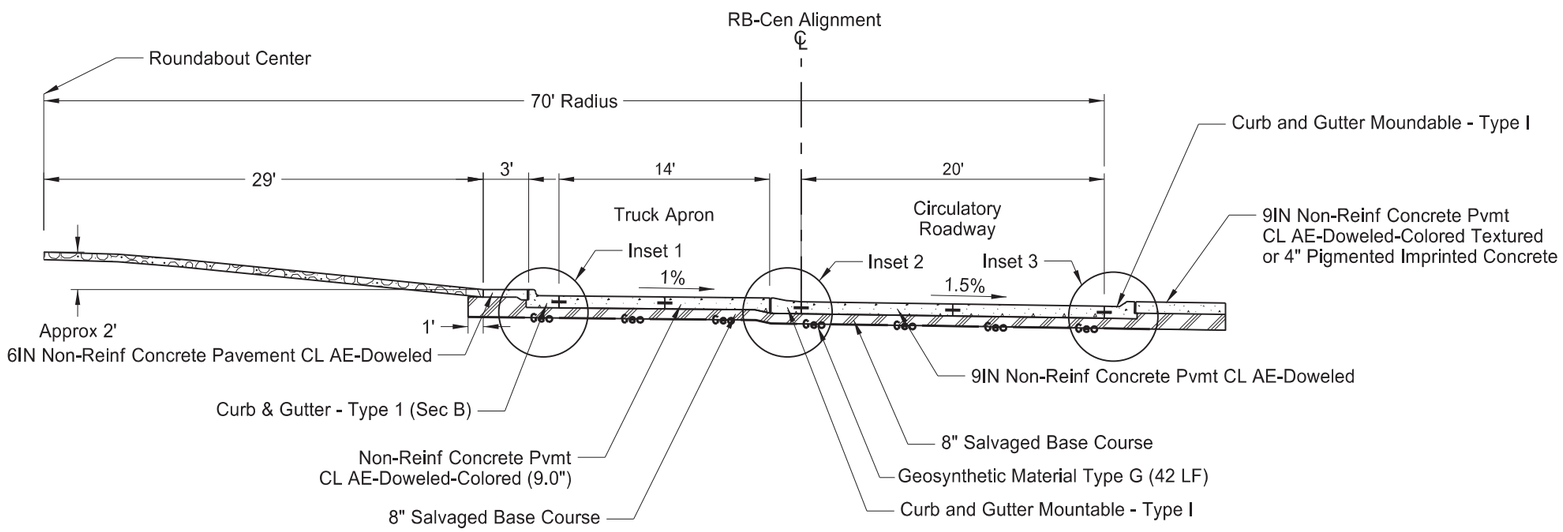

Proposed Typical Section
Roundabout Center Circle

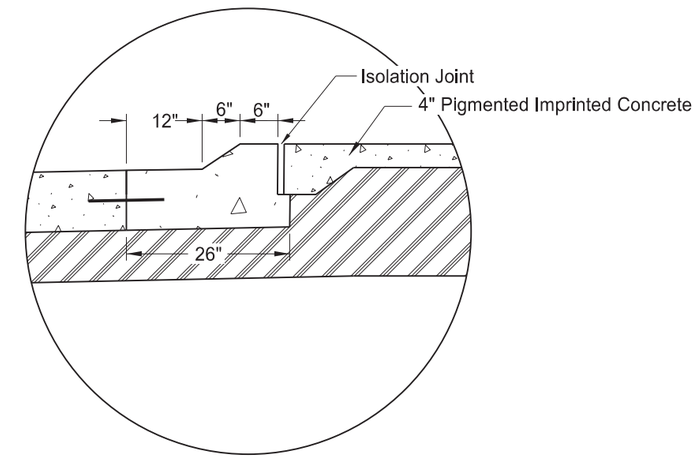

Inset 3B
Curb & Gutter Mountable - Type I
(Splitter Island Curb & Gutter)

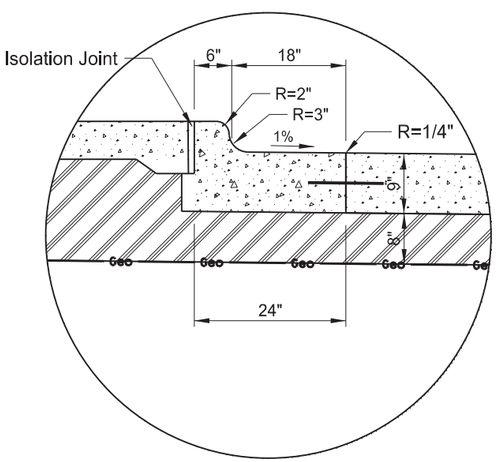

Inset 1
Curb & Gutter Type 1 (Sec B)

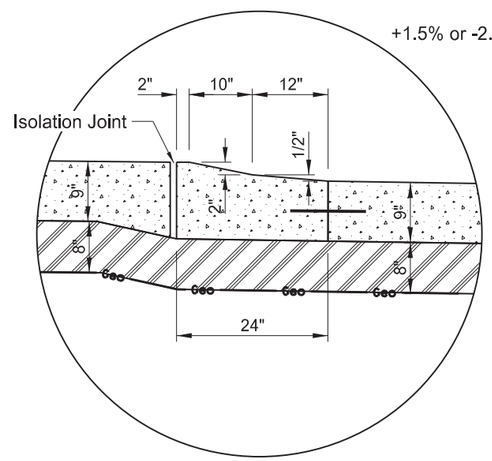

Inset 2
Curb & Gutter Mountable - Type I
(Truck Apron Curb & Gutter)

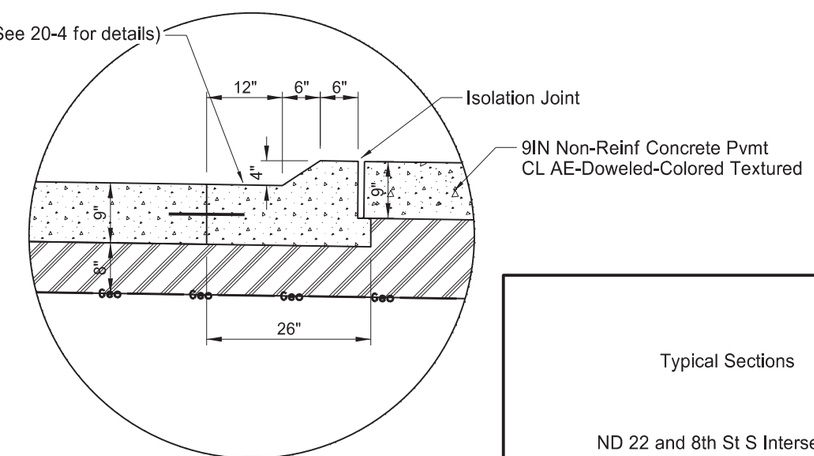

Inset 3A
Curb & Gutter Mountable - Type I
(Splitter Island Curb & Gutter)

Typical Sections

ND 22 and 8th St S Intersection

REGISTERED PROFESSIONAL ENGINEER
DAWN L.S. MICHEL
PE-8029
DATE 2025.12.18 08:53:24 -06'00'
NORTH DAKOTA

STATE	PROJECT NO.	SECTION NO.	SHEET NO.
ND	HEN-5-022(144)069	30	6

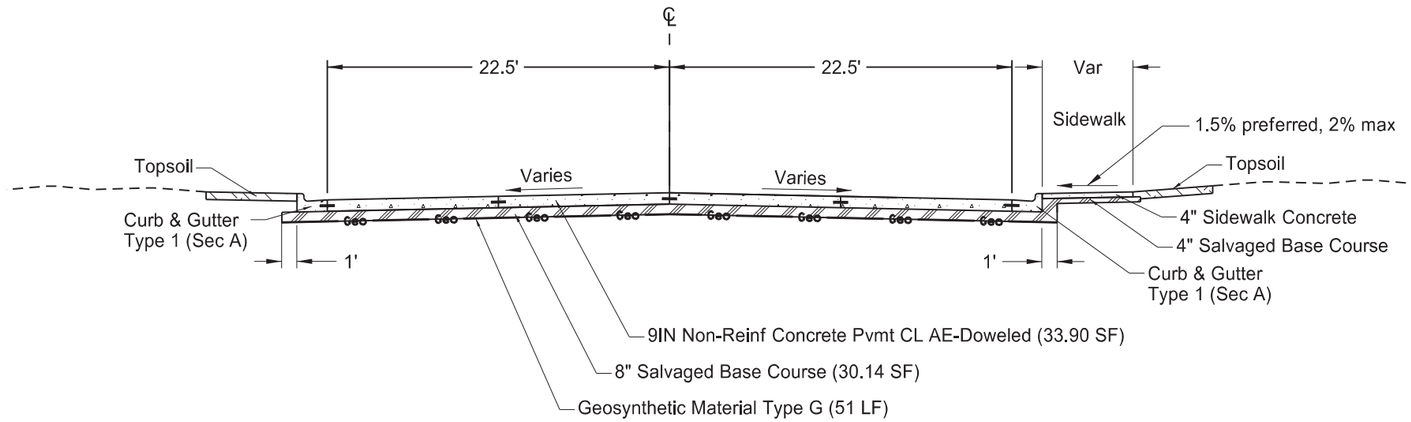

Proposed Typical Section

Sta 65+42 to Sta 66+07 (8th St)
Sta 70+85 to Sta 71+00 (8th St)
Sta 3675+53 to Sta 3675+68 (ND 22)
Sta 3880+75 to Sta 3680+90 (ND 22)

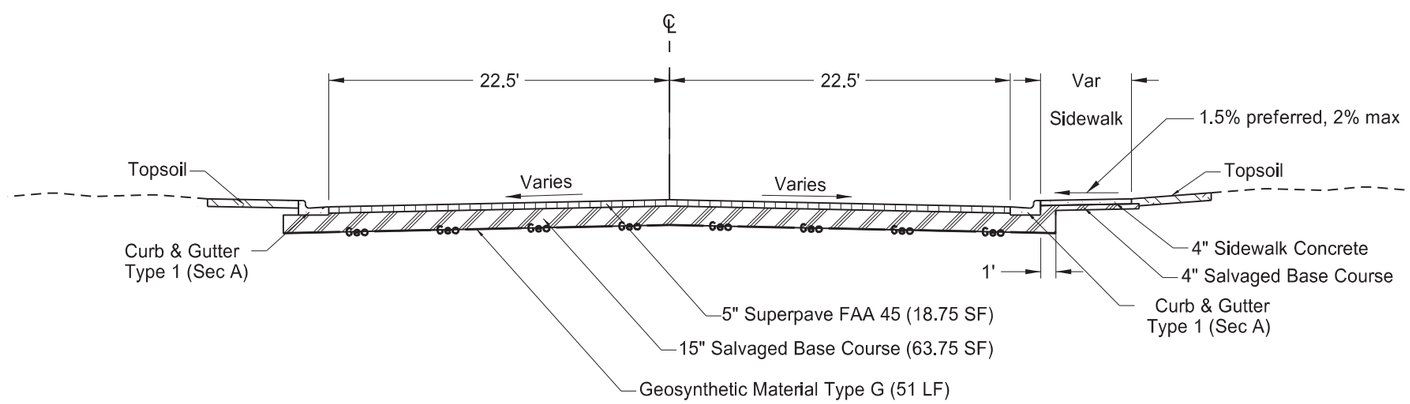

Proposed Typical Section

Sta 3675+38 to Sta 3675+53 (ND 22)
Sta 3680+90 to Sta 3681+05 (ND 22)

Typical Sections

ND 22 and 8th St S Intersection

REGISTERED PROFESSIONAL ENGINEER
DAWN L.S. MICHEL
PE-8029
DATE 2025.12.18 08:53:35 -06'00'
NORTH DAKOTA

STATE	PROJECT NO.	SECTION NO.	SHEET NO.
ND	HEN-5-022(144)069	30	7

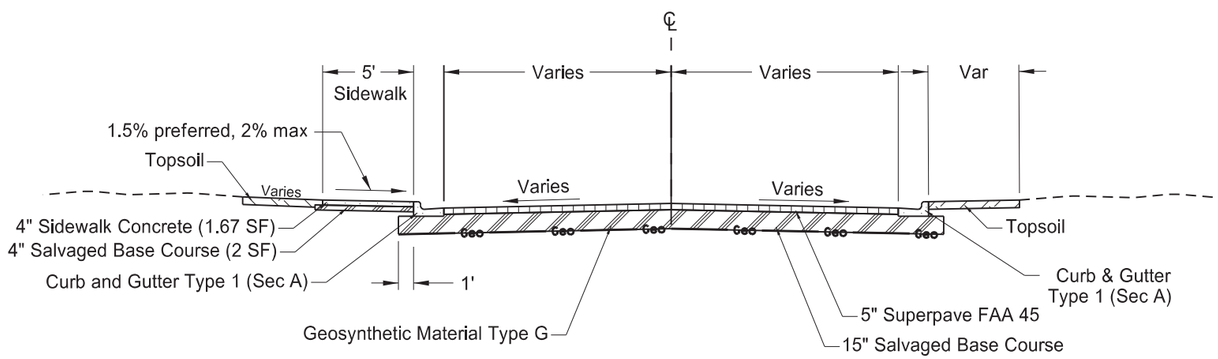

Proposed Typical Section
Sta 71+00 to Sta 72+00 (8th St SE)
W Frontage Road
E Frontage Road

Typical Sections

ND 22 and 8th St S Intersection

REGISTERED PROFESSIONAL ENGINEER
DAWN L.S. MICHEL
PE-8029
DATE 2025.12.18 08:53:48 -06'00'
NORTH DAKOTA

STATE	PROJECT NO.	SECTION NO.	SHEET NO.
ND	HEN-5-022(144)069	40	1

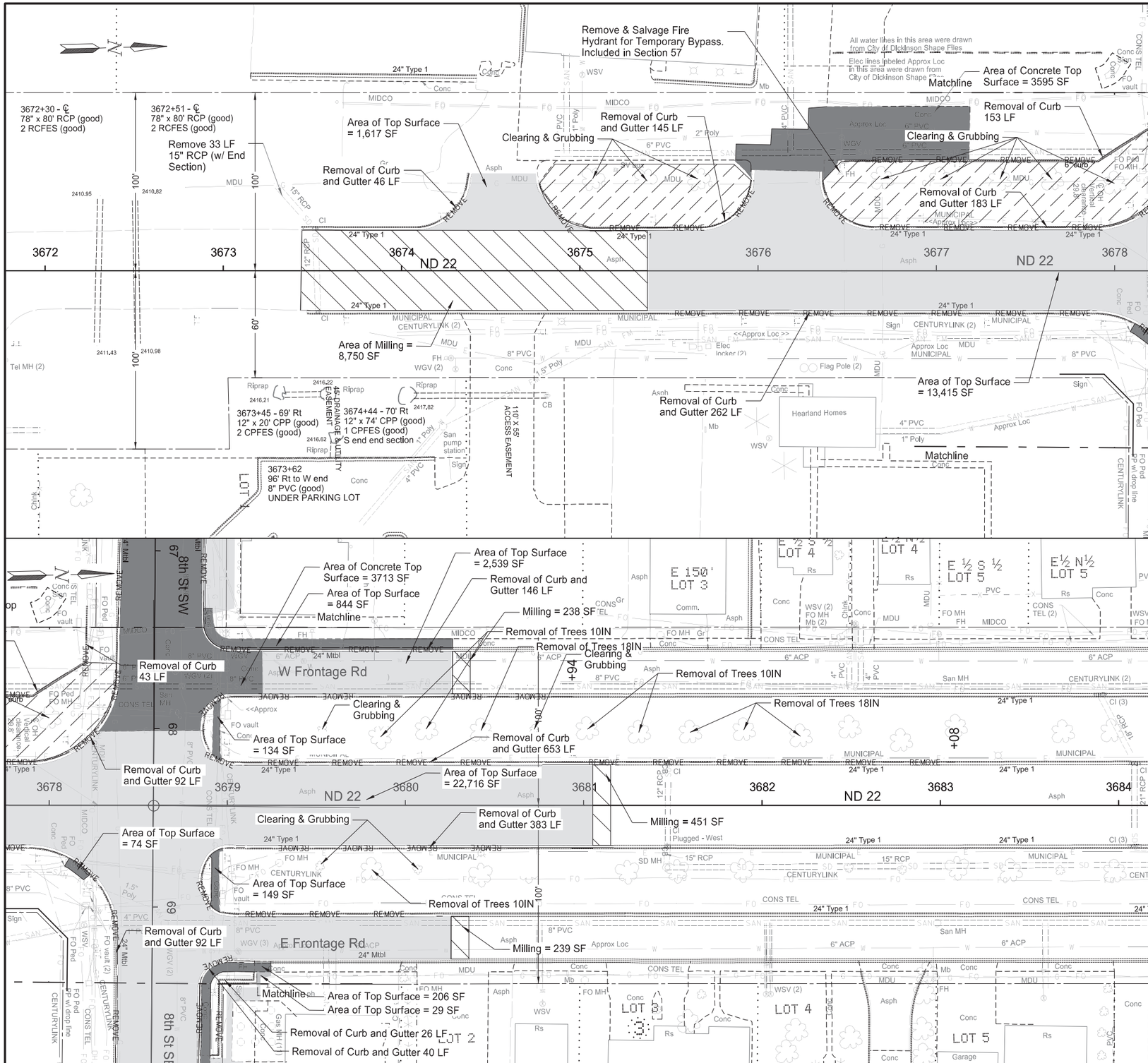

SPEC	CODE	BID ITEM	QTY	UNIT
HEN-5-022(144)069				
201	0370	REMOVAL OF TREES 10IN		
		Sta 3679+86 - 39' Lt	1	EA
		Sta 3679+81 - 35' Rt	1	EA
		Sta 3680+11 - 43' Lt	1	EA
		Sta 3681+02 - 43' Lt	1	EA
		Sta 3681+31 - 41' Lt	1	EA
201	0380	REMOVAL OF TREES 18IN		
		Sta 3680+42 - 42' Lt	1	EA
		Sta 3681+60 - 41' Lt	1	EA
		Sta 3681+90 - 42' Lt	1	EA
		Sta 3682+22 - 39' Lt	1	EA
202	0136	REMOVAL OF PAVEMENT		
		Mainline HBP (5" Depth)	1,115	TON
		W Frontage Road HBP (5" Depth)	78	TON
		Mainline Concrete (8" Depth)	20	TON
		Parking Concrete (8" Depth)	20	TON
		Approach HBP (5" Depth)	60	TON
		Sidewalk (4" Depth)	35	TON
		Curb & Gutter	203	TON
202	0174	REMOVAL OF PIPE ALL TYPES AND SIZES		
		Sta 3673+29 - 46' Lt to Sta 3673+42 - 32' Lt	33	LF
411	0105	MILLING PAVEMENT SURFACE		
		Mainline	1,075	SY
722	6241	ADJUST SPRINKLER SYSTEM		
			1	L SUM

LEGEND

- Removal of Pavement (Bituminous)
- Removal of Pavement (Concrete)
- Milling Pavement Surface
- Adjust Sprinkler System

Removals

ND 22 and 8th St S Intersection

Sta 3672+00 to Sta 3684+00

REGISTERED PROFESSIONAL ENGINEER
DAWN L.S. MICHEL
PE-8029
DATE 2025.12.18 08:55:05 -06'00'
NORTH DAKOTA

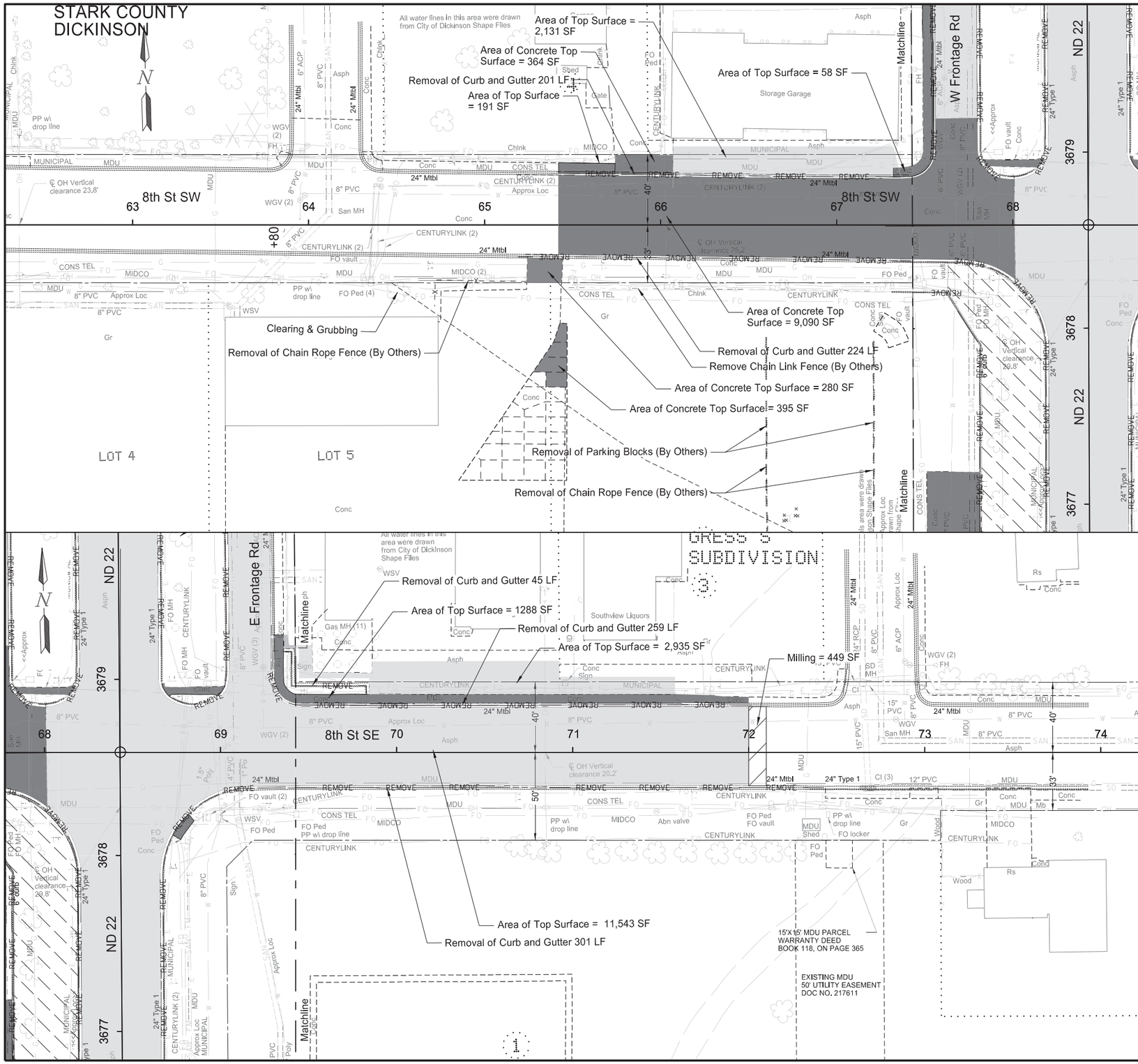

STATE	PROJECT NO.	SECTION NO.	SHEET NO.
ND	HEN-5-022(144)069	40	2

SPEC	CODE	BID ITEM	QTY	UNIT
HEN-5-022(144)069-Local				
202	0136	REMOVAL OF PAVEMENT		
		Mainline HBP (5" Depth)	359	TON
		Parking Area HBP (5" Depth)	156	TON
		Mainline Concrete (8" Depth)	50	TON
		Driveway Concrete (8" Depth)	51	TON
		Sidewalk (4" Depth)	76	TON
		Curb & Gutter	90	TON
411	0105	MILLING PAVEMENT SURFACE		
		Mainline	92	SY

Note:
Chain link fence, rope fence and parking blocks in the easement in the SW quadrant to be removed by others.

LEGEND

- Removal of Pavement (Bituminous)
- Removal of Pavement (Concrete)
- Milling Pavement Surface
- Adjust Sprinkler System

Removals

ND 22 and 8th St S Intersection

Sta 62+50 to Sta 74+00

REGISTERED PROFESSIONAL ENGINEER
DAWN L.S. MICHEL
PE-8029
DATE 2025.12.18 08:54:46 -06'00'
NORTH DAKOTA

STATE	PROJECT NO.	SECTION NO.	SHEET NO.
ND	HEN-5-022(144)069	50	1

INLET AND MANHOLE SUMMARY

Manhole No.	ST 1 - 60 In.
Sta.	3673+51.5 - 36.0' Lt. (SCL22)
Top Elev.	2422.84
Base Elev.	2417.68
Invert Elev.	2418.40
Riser	4.00 Ft.

30 In. Conduit N	2418.50
15 In. Conduit E	2418.50
30 In. Conduit SW	2418.40

Manhole No.	ST 2 - 60 In.
Sta.	3675+53.6 - 36.0' Lt. (SCL22)
Top Elev.	2426.50
Base Elev.	2419.31
Invert Elev.	2419.61
Riser	5.52 Ft.

30 In. Conduit NW	2419.71
18 In. Conduit E	2419.71
30 In. Conduit S	2419.61

Inlet No.	ST 2A
Type	Inlet - Type 2
Grate Style	L or V
Sta.	3675+53.6 - 23.7' Lt. (SCL22)
Top Elev.	2425.11
Base Elev.	2419.79
Invert Elev.	2420.00
H' Dist.	4.57 Ft.

18 In. Conduit W	2420.00

Manhole No.	ST 3 - 72 In.
Sta.	3678+29.6 - 82.8' Lt (SCL22)
Top Elev.	2427.91
Base Elev.	2420.56
Invert Elev.	2420.86
Riser	5.68 Ft.

15 In. Conduit N	2420.96
18 In. Conduit E	2420.90
18 In. Conduit W	2420.96
30 In. Conduit SE	2420.86

Inlet No.	ST 3A
Type	Inlet - Type 2
Grate Style	D
Sta.	3678+41.4 - 190.9' Lt. (SCL22)
Top Elev.	2426.22
Base Elev.	2421.09
Invert Elev.	2421.30
H' Dist.	4.38 Ft.

18 In. Conduit NE	2421.40
18 In. Conduit E	2421.30

Inlet No.	ST 3B
Type	Inlet Mountable Curb - Type B
Grate Style	D
Sta.	3678+88.3 - 162.9' Lt. (SCL22)
Top Elev.	2426.03
Base Elev.	2421.16
Invert Elev.	2421.50
H' Dist.	4.00 Ft.

18 In. Conduit SW	2421.50

Inlet No.	ST 3C
Type	Inlet - Type 2
Grate Style	L or V
Sta.	3678+37.0 - 238.2' Rt. (SCL22)
Top Elev.	2425.35
Base Elev.	2420.60
Invert Elev.	2421.30
H' Dist.	4.00 Ft.

18 In. Conduit N	2421.40
18 In. Conduit W	2421.30

Inlet No.	ST 3D
Type	Inlet Mountable Curb - Type B
Grate Style	L or V
Sta.	3678+83.3 - 237.2' Rt. (SCL22)
Top Elev.	2424.87
Base Elev.	2420.00
Invert Elev.	2421.50
H' Dist.	4.00 Ft.

18 In. Conduit S	2421.50

Inlet No.	ST 3E
Type	Inlet Catch Basin - 6 In. Beehive
Sta.	3679+26.7 - 73.9' Lt. (SCL22)
Top Elev.	2425.50
Base Elev.	2420.50
Invert Elev.	2422.00
H' Dist.	4.00 Ft.

15 In. Conduit S	2422.00

Notes:
1. All Inlet - Type 2 inlets include 4" casting height and 5"adjusting rings.
2. All Inlet - Mountable Curb Type B inlets include 5.5" casting height and 5" adjusting rings.
3. All Manhole and Inlet Catch Basin structures include 7" casting height and 5" adjusting rings unless otherwise noted.
4. Manhole ST 1 includes a 4" casting height and 2" adjusting rings.

Structure Summary

ND 22 and 8th St S Intersection

REGISTERED PROFESSIONAL ENGINEER
LEVI L CLAGETT
PE-40749
DATE 2025.12.18 08:07:31-06'00'
NORTH DAKOTA

STATE	PROJECT NO.	SECTION NO.	SHEET NO.
ND	HEN-5-022(144)069	51	1

Begin Station / Location	Begin Offset	End Station / Location	End Offset	Pipe Installation (Pay Item)			Allowable Material	Required Diameter	Steel Pipe Coatings	Steel Pipe Corrugations or Spiral Ribs	Steel Pipe Minimum Thickness	Geosythetic Material - Type G (Pay Item)	(*) End Sections		Applicable Backfill
				In	Bid Item	LF		In	Type		In	SY	Begin EA	End EA	
ST 1		3673+30	48' Lt	30	Pipe Conduit 30IN - Storm Drain	26	Reinforced Concrete Pipe - Class III (barrel length = 24 LF)	30						FES	Standard D-714-27
							Spiral Rib Steel Pipe	30	P	3/4, 1	0.064				
Ex Inlet		ST 1		15	Pipe Conduit 15IN - Storm Drain	12	Reinforced Concrete Pipe - Class III (barrel length = 12 LF)	15							Standard D-714-27
ST 2		ST 1		30	Pipe Conduit 30IN - Storm Drain	202	Reinforced Concrete Pipe - Class III (barrel length = 202 LF)	30							Standard D-714-27
							Spiral Rib Steel Pipe	30	P	3/4, 1	0.064				
ST 2A		ST 2		18	Pipe Conduit 18IN - Storm Drain	12	Reinforced Concrete Pipe - Class III (barrel length = 12 LF)	18							Standard D-714-27
							Spiral Rib Steel Pipe	18	P	3/4, 1	0.064				
ST 3		ST 2		30	Pipe Conduit 30IN - Storm Drain	280	Reinforced Concrete Pipe - Class III (barrel length = 280 LF)	30							Standard D-714-27
							Spiral Rib Steel Pipe	30	P	3/4, 1	0.064				
ST 3A		ST 3		18	Pipe Conduit 18IN - Storm Drain	109	Reinforced Concrete Pipe - Class III (barrel length = 109 LF)	18							Standard D-714-27
							Spiral Rib Steel Pipe	18	P	3/4, 1	0.064				
ST 3B		ST 3A		18	Pipe Conduit 18IN - Storm Drain	54	Reinforced Concrete Pipe - Class III (barrel length = 54 LF)	18							Standard D-714-27
							Spiral Rib Steel Pipe	18	P	3/4, 1	0.064				
ST 3C		ST 3		18	Pipe Conduit 18IN - Storm Drain	320	Reinforced Concrete Pipe - Class III (barrel length = 320 LF)	18							Standard D-714-27
							Spiral Rib Steel Pipe	18	P	3/4, 1	0.064				
ST 3D		ST 3C		18	Pipe Conduit 18IN - Storm Drain	47	Reinforced Concrete Pipe - Class III (barrel length = 47 LF)	18							Standard D-714-27
							Spiral Rib Steel Pipe	18	P	3/4, 1	0.064				
ST 3E		ST 3		15	Pipe Conduit 15IN - Storm Drain	98	Reinforced Concrete Pipe - Class III (barrel length = 98 LF)	15							Standard D-714-27

Corrugations: 2 = 2-2/3"x1/2"
3 = 3"x1"
5 = 5"x1"

Coatings: Z = Zinc
A = Aluminum
P = Polymeric (over Zinc or Aluminum)

Spiral Ribs: 3/4 = 3/4"x3/4"@7-1/2"
1 = 3/4"x1"@11-1/2"

(*) End sections are measured and paid for separately for pipe extensions.
FES = Flared End Section
TES = Traversable End Section

Allowable Pipe List

ND 22 and 8th St S Intersection

REGISTERED PROFESSIONAL ENGINEER
LEVI L CLAGETT
PE-40749
DATE 2025.12.18 08:08:01-06'00'
NORTH DAKOTA

STATE	PROJECT NO.	SECTION NO.	SHEET NO.
ND	HEN-5-022(144)069	55	1

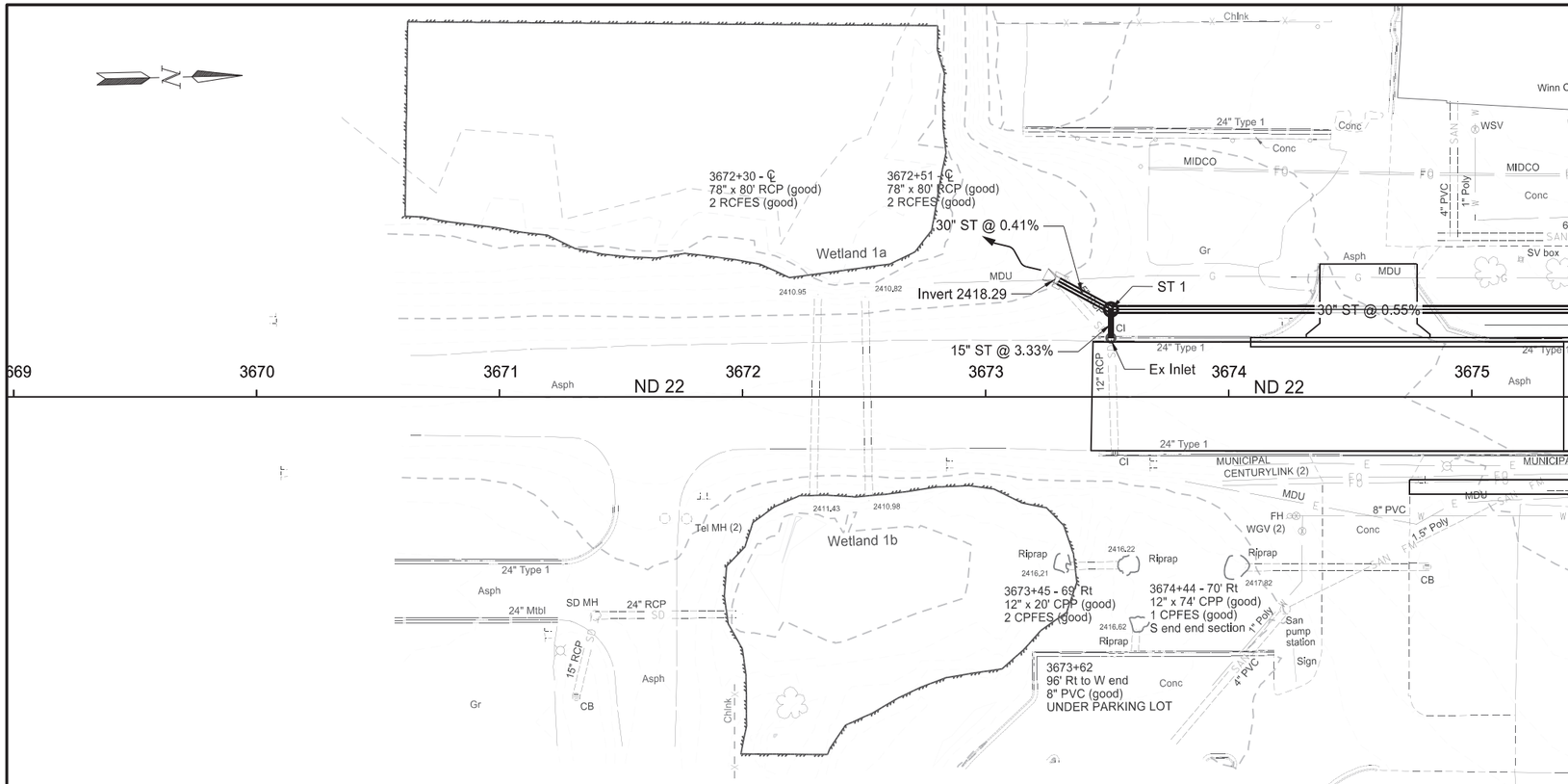

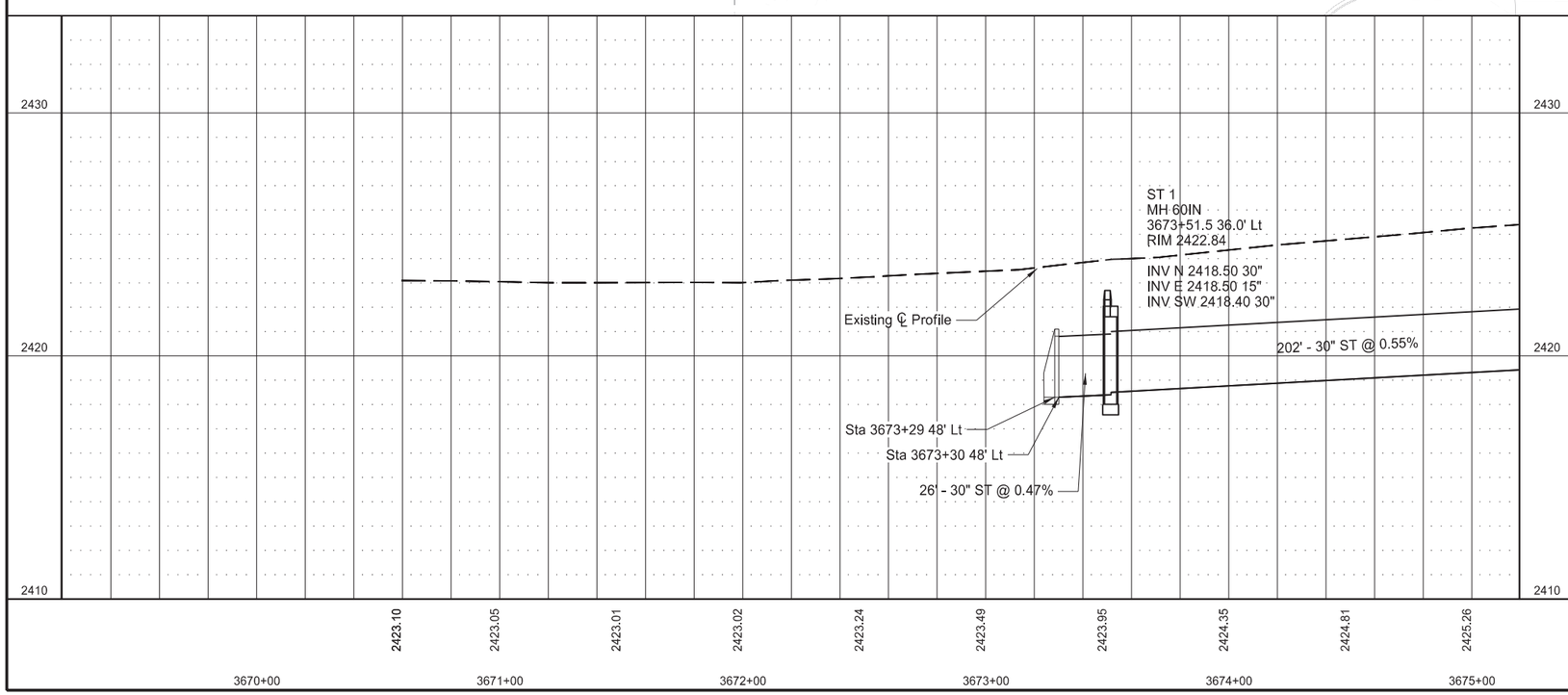

SPEC	CODE	BID ITEM	QTY	UNIT
HEN-5-022(144)069				
714	4097	PIPE CONDUIT 15IN-STORM DRAIN		
		Ex Inlet to ST 1	12	LF
714	4112	PIPE CONDUIT 30IN-STORM DRAIN		
		Sta 3673+30 48' Lt to ST 1	26	LF
		ST 1 to Sta 3675+00 36' Lt	148	LF
722	0110	MANHOLE 60IN		
		ST 1	1	EA
722	1110	MANHOLE RISER 60IN		
		ST 1	4.00	LF

Stationing based on SCL22

Drainage Layout

ND 22 and 8th St S Intersection

REGISTERED PROFESSIONAL ENGINEER
LEVI L CLAGETT
PE-40749
DATE 2025.12.18 08:10:09-06'00'
NORTH DAKOTA

STATE	PROJECT NO.	SECTION NO.	SHEET NO.
ND	HEN-5-022(144)069	55	2

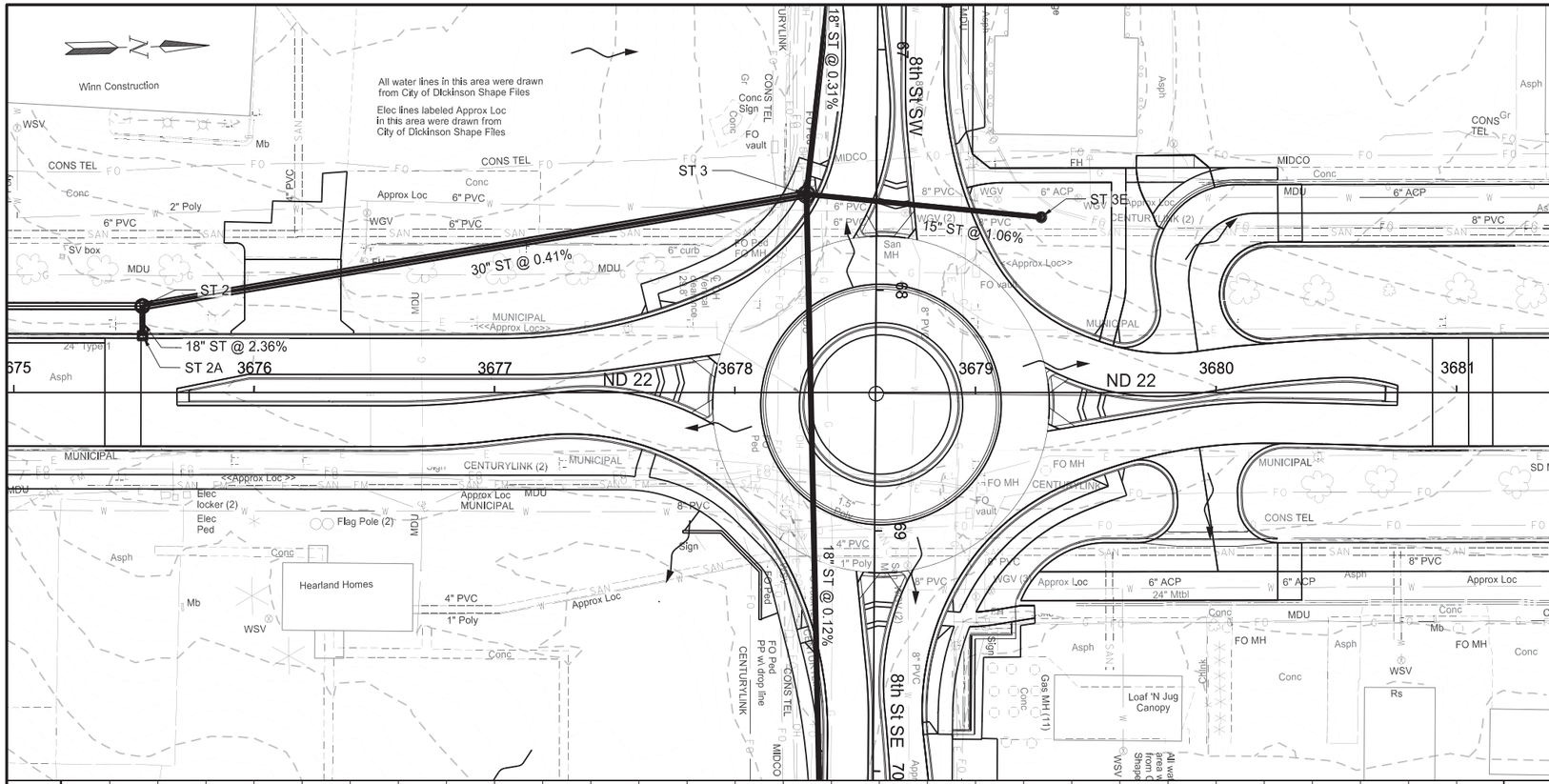

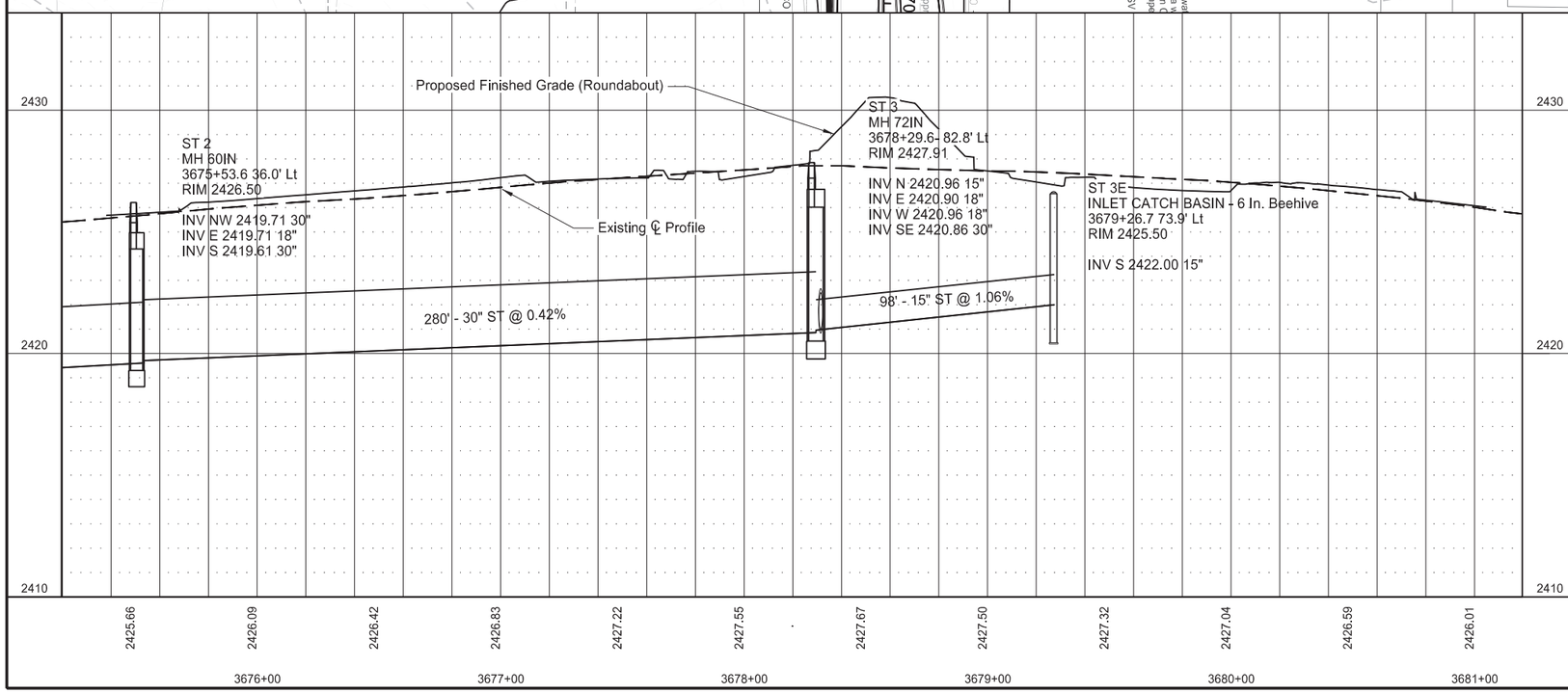

SPEC	CODE	BID ITEM	QTY	UNIT
HEN-5-022(144)069				
714	4097	PIPE CONDUIT 15IN-STORM DRAIN		
		ST 3E to ST 3	98	LF
714	4101	PIPE CONDUIT 18IN-STORM DRAIN		
		ST 2A to ST 2	12	LF
714	4112	PIPE CONDUIT 30IN-STORM DRAIN		
		Sta 3675+00 36' Lt to ST 2	54	LF
		ST 2 to ST 3	280	LF
722	0110	MANHOLE 60IN		
		ST 2	1	EA
722	0120	MANHOLE 72IN		
		ST 3	1	EA
722	1110	MANHOLE RISER 60IN		
		ST 2	5.52	LF
722	1120	MANHOLE RISER 72IN		
		ST 3	5.68	LF
722	3510	INLET-TYPE 2		
		ST 2A	1	EA
722	4010	INLET CATCH BASIN 6IN BEEHIVE		
		ST 3E	1	EA

Stationing based on SCL22

Drainage Layout

ND 22 and 8th St S Intersection

REGISTERED PROFESSIONAL ENGINEER
LEVI L CLAGETT
PE-40749
DATE 2025.12.18 08:10:24-06'00'
NORTH DAKOTA

STATE	PROJECT NO.	SECTION NO.	SHEET NO.
ND	HEN-5-022(144)069	55	3

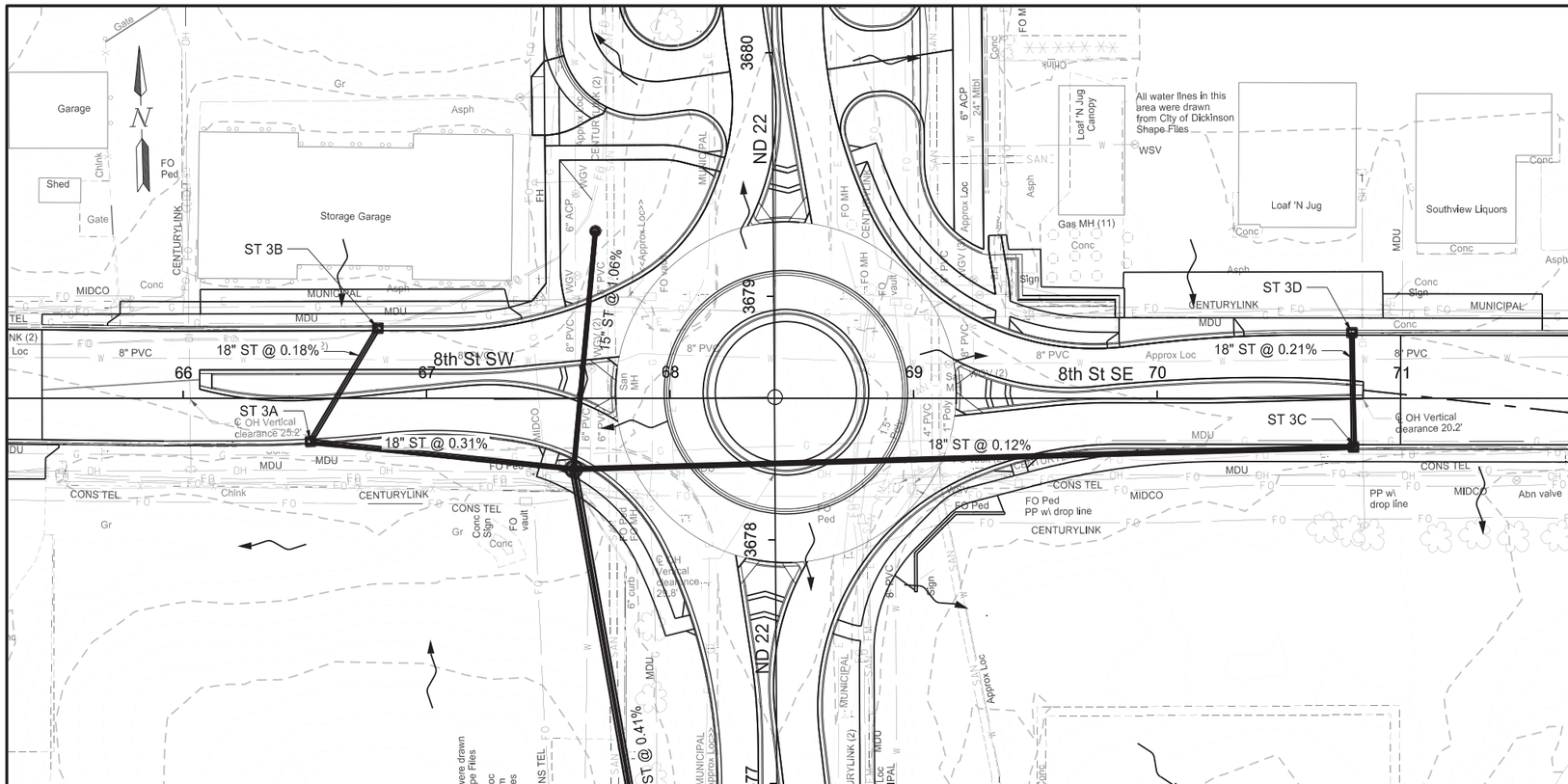

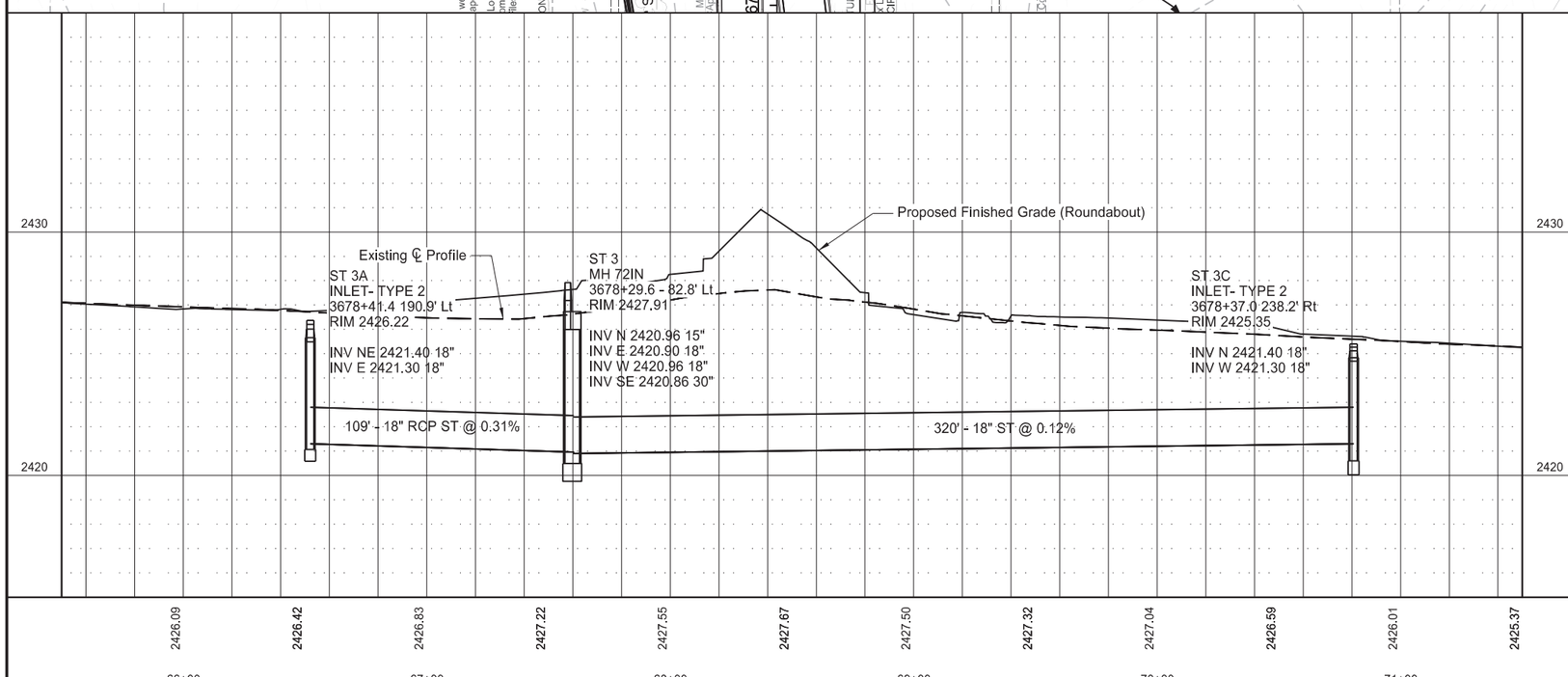

SPEC	CODE	BID ITEM	QTY	UNIT
HEN-5-022(144)069				
714	4101	PIPE CONDUIT 18IN-STORM DRAIN		
		ST 3D to ST 3C	47	LF
		ST 3C to ST 3	320	LF
		ST 3B to ST 3A	54	LF
		ST 3A to ST 3	109	LF
722	3510	INLET-TYPE 2		
		ST 3A	1	EA
		ST 3C	1	EA
722	4060	INLET MOUNTABLE CURB-TYPE B		
		ST 3B	1	EA
		ST 3D	1	EA

Stationing based on SCL22

Drainage Layout

ND 22 and 8th St S Intersection

REGISTERED PROFESSIONAL ENGINEER
LEVI L CLAGETT
PE-40749
DATE 2025.12.18 08:10:36-06'00'
NORTH DAKOTA

STATE	PROJECT NO.	SECTION NO.	SHEET NO.
ND	HEN-5-022(144)069	55	4

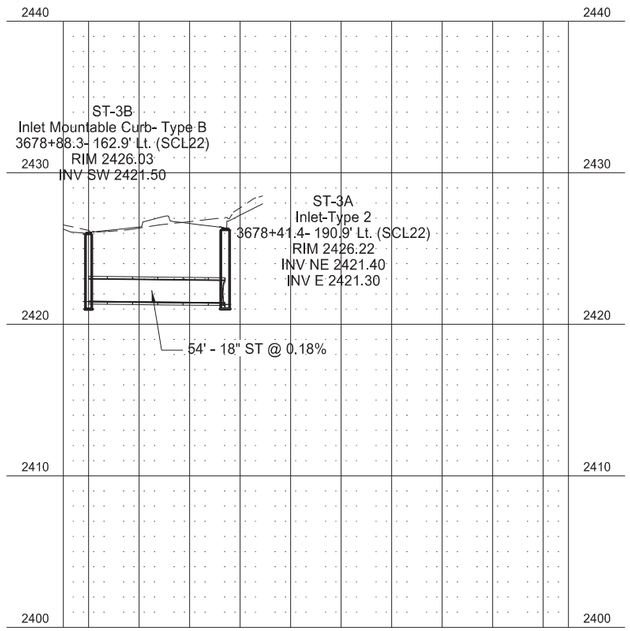

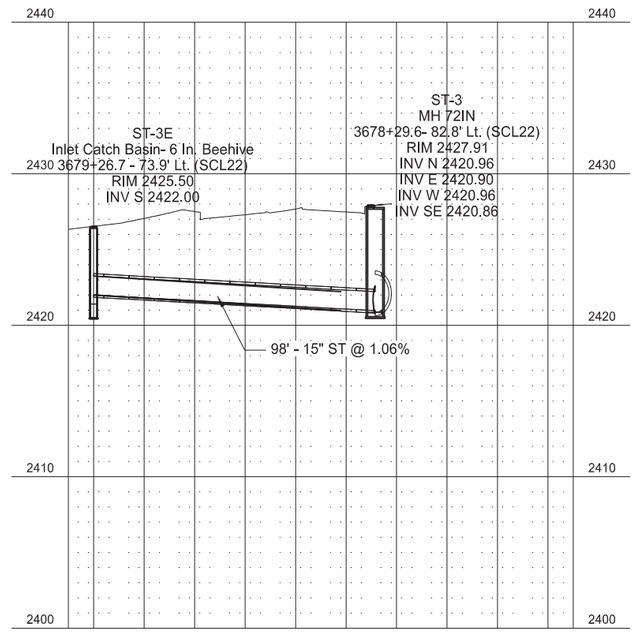

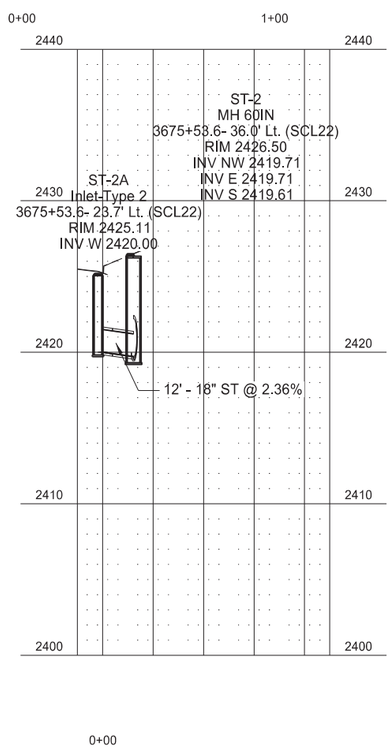

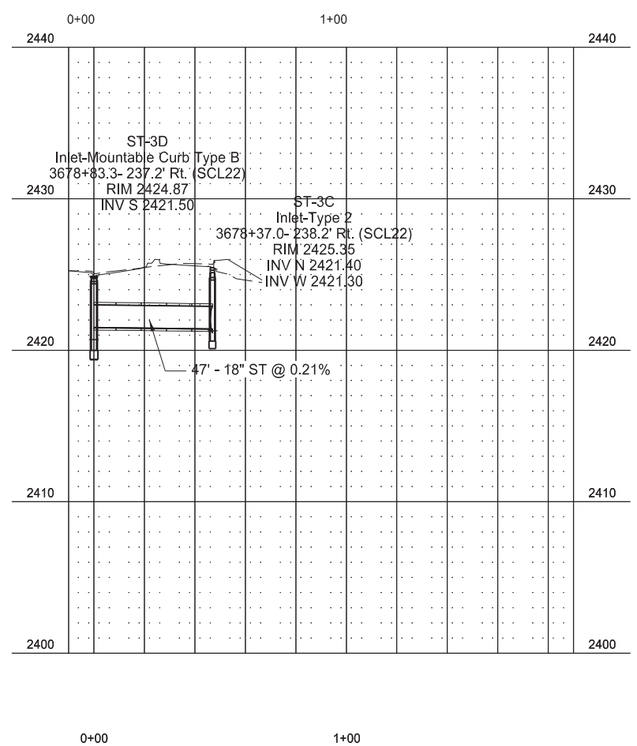

Storm Plan and Profile

ND 22 and 8th St S Intersection

REGISTERED PROFESSIONAL ENGINEER
LEVI L CLAGETT
PE-40749
DATE 2025.12.18 08:10:48-06'00'
NORTH DAKOTA

STATE	PROJECT NO.	SECTION NO.	SHEET NO.
ND	HEN-5-022(144)069	57	1

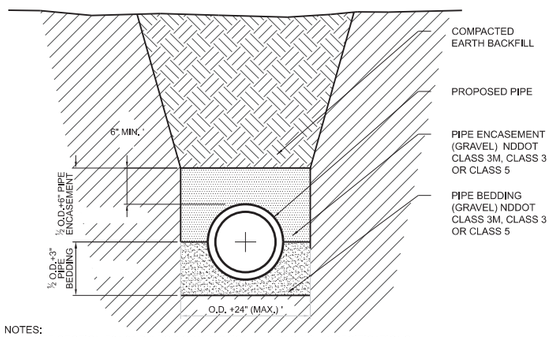

NOTES:
1. SEE SECTION 724.04.B.3 FOR COMPACTION AND BACKFILL SPECIFICATIONS.
2. ROCK BEDDING IS TO BE USED WHERE GROUNDWATER IS PRESENT (INCIDENTAL).
3. CONTRACTOR MAY USE MATERIAL FROM THE TRENCH THAT MEETS THE PIPE MANUFACTURERS REQUIREMENTS FOR PIPE ENCASEMENT AND BEDDING AROUND PIPE AFTER PROVIDING CERTIFICATION OF MATERIAL.

1 WATERMAIN TRENCH BACKFILL DETAIL

NO SCALE

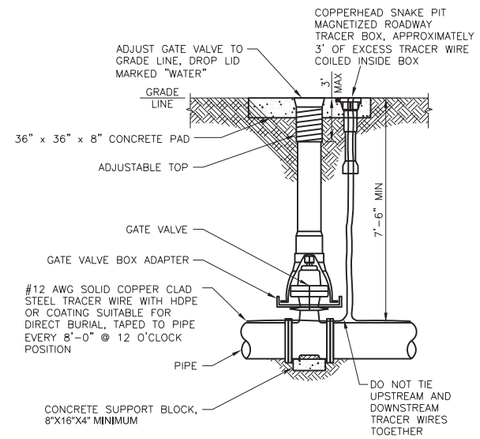

2 GATE VALVE - STANDARD

NO SCALE - CITY OF DICKINSON DETAIL NO. C5.01

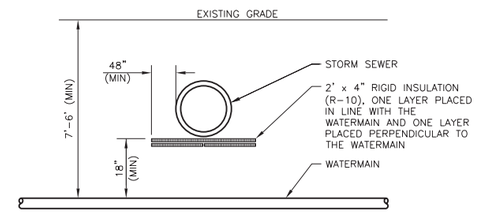

3 WATERMAIN INSULATION

NO SCALE - CITY OF DICKINSON DETAIL NO. C5.09

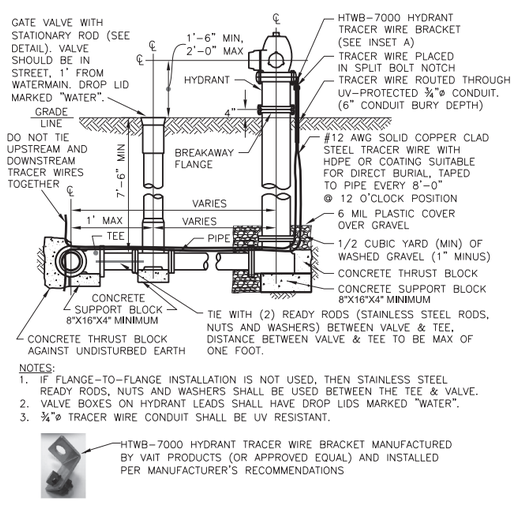

NOTES:
1. IF FLANGE-TO-FLANGE INSTALLATION IS NOT USED, THEN STAINLESS STEEL READY RODS, NUTS AND WASHERS SHALL BE USED BETWEEN THE TEE & VALVE.
2. VALVE BOXES ON HYDRANT LEADS SHALL HAVE DROP LIDS MARKED "WATER".
3. ¾"ø TRACER WIRE CONDUIT SHALL BE UV RESISTANT.

4 HYDRANT WITH GATE VALVE - STANDARD DETAIL

NO SCALE - CITY OF DICKINSON DETAIL NO. C5.02

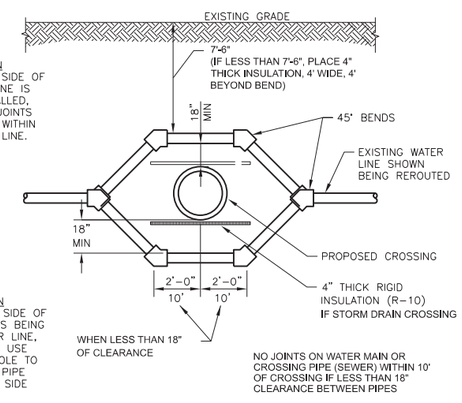

FOR NEW WATER LINE CONSTRUCTION
CENTER WATER PIPE 10 FEET EACH SIDE OF CROSSING. WHEN EXISTING SEWER LINE IS ABOVE THE WATER LINE BEING INSTALLED, INSTALL MECHANICALLY RESTRAINED JOINTS ON THE WATER PIPE AT ALL JOINTS WITHIN 10 FEET EACH SIDE OF THE SEWER LINE.

FOR NEW SEWER LINE CONSTRUCTION
CENTER SEWER PIPE 10 FEET EACH SIDE OF CROSSING. WHEN NEW SEWER LINE IS BEING INSTALLED ABOVE AN EXISTING WATER LINE, SLEEVE SDR-35 OR EQUAL PIPE OR USE C-900 OR EQUAL PIPE FROM MANHOLE TO MANHOLE AND RESTRAIN ALL WATER PIPE CONNECTIONS WITHIN 10 FEET EACH SIDE OF SEWER LINE.

NOTES:
1. "WATER" INCLUDES WATERMAINS AND SERVICE LATERALS.
2. "SEWER" INCLUDES SANITARY SEWER, STORM SEWER AND RECLAIMED WATERMAINS AND LATERALS.
3. PROVIDE 18 INCHES MINIMUM OF VERTICAL SEPARATION BETWEEN WATER AND SEWER LINES. WHEN SEPARATION CANNOT BE OBTAINED AND IN CASES WHERE WATER LINES MUST BE ROUTED UNDER EXISTING SEWER LINES, LOWER WATER LINE AS SHOWN ON THIS DETAIL.
4. IF WATER LINE IS 18 INCHES OR GREATER ABOVE THE SEWER LINE, NO SPECIAL CONSTRUCTION IS REQUIRED.
5. RESTRAINT JOINTS REQUIRED ON ALL FITTINGS.
6. BOTH WATER LINE AND SEWER LINE SHALL HAVE ONE (1) FULL PIPE LENGTH AT INTERSECTION OF CROSSING.
7. FOR PURPOSES OF SEPARATIONS AND PROTECTION OF THE WATER SUPPLY, A RECLAIMED WATER LINE SHALL BE CONSIDERED A SEWER LINE. NO CONCRETE SHALL BE PLACED ON RECLAIMED WATER PIPE JOINTS.
8. 22.5° BENDS MAY BE USED IN LIEU OF 45° BENDS.
9. PAYMENT FOR GRADE CHANGE CROSSINGS WILL BE MADE AT THE BID PRICE ON THE BID FORM FOR THE DUCTILE IRON FITTINGS AND WATERMAIN.
10. CONTRACTOR MAY CHOOSE TO USE FOR BACKFILL IN THIS AREA. THE PRICE OF THIS WORK SHALL BE INCLUDED WITHIN THE COST OF THE WATERMAIN INSTALLATION ON THE BID FORM.

5 WATERMAIN AND WATER SERVICE GRADE CHANGE AT CROSSINGS

NO SCALE - CITY OF DICKINSON DETAIL NO. C5.08

Watermain Details

ND 22 and 8th St S Intersection

REGISTERED PROFESSIONAL ENGINEER
SCOTT M. SCHNEIDER
PE-5347
DATE 2025.12.17 07:56:12-07'00'
NORTH DAKOTA

STATE	PROJECT NO.	SECTION NO.	SHEET NO.
ND	HEN-5-022(144)069	57	2

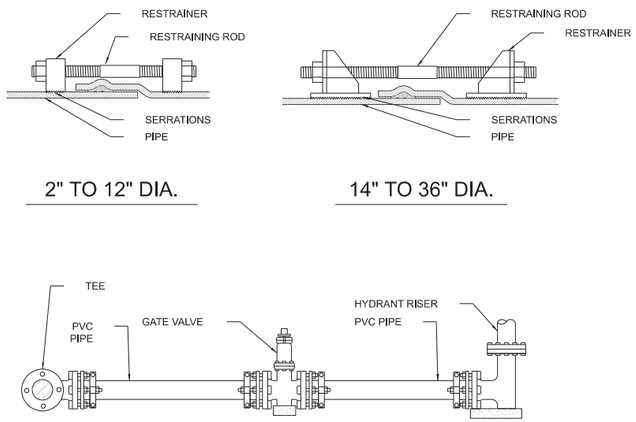

A. RESTRAINING DEVICES SHALL MEET OR EXCEED THE REQUIREMENTS OF ASTM F 1694.
B. APPROVED TYPES ARE UNIFLANGE PVC PIPE RESTRAINTS & EEBA IRON SERIES 2000 PV.
C. ALL METAL FITTINGS AND RESTRAINING DEVICES TO BE WRAPPED IN POLYETHYLENE PLASTIC (8 MIL MIN.).

NOTE:

ADDITIONAL LENGTH OF PIPE TO BE RESTRAINED ON EACH SIDE OF ANY RESTRAINED FITTINGS (SEE TABLE BELOW).

TYPICAL INSTRUCTIONS

SIZE	45° VERT. OFFSET* (L)	22 1/2° VERT. OFFSET* (L)
6"	15'/8'	7'/4'
8"	19'/11'	9'/5'
10"	23'/13'	11'/6'
12"	27'/15'	13'/8'
16"	35'/20'	17'/10'
18"	58'/12'	28'/6'
20"	64'/13'	31'/6'
24"	74'/15'	36'/7'
30"	89'/17'	43'/9'
36"	103'/20'	50'/10'
42"	120'/24'	58'/12'
48"	134'/27'	65'/13'

* FIRST NUMBER IS THE RECOMMENDED RESTRAINED LENGTH ON EACH SIDE OF THE DOWN BEND, THE SECOND NUMBER IS THE LENGTH FOR EACH SIDE OF THE UP BEND.

RESTRAINED LENGTHS OF PVC PIPE

NOM. PIPE SIZE	90° BEND (L)	45° BEND (L)	22.5° BEND (L)	11.25° BEND (L)	SIZE ON SIZE TEE(L)*	VALVE/ DEAD-END(L)
6"	19'	8'	4'	2'	2'	35'
8"	25'	11'	5'	3'	13'	45'
10"	31'	13'	6'	3'	23'	55'
12"	36'	15'	8'	4'	33'	65'
16"	47'	20'	10'	5'	52'	84'
18"	49'	21'	10'	5'	62'	96'
20"	53'	22'	11'	6'	73'	106'
24"	61'	26'	13'	6'	95'	125'
30"	72'	30'	15'	8'	125'	152'
36"	82'	34'	17'	9'	155'	180'
42"	91'	38'	19'	9'	189'	212'
48"	101'	42'	21'	10'	219'	239'

* RECOMMENDED RESTRAINED LENGTHS FOR TEES ARE FOR THE BRANCH OUTLET AND ASSUME A MINIMUM 10 FT. SECTION OF PIPE ATTACHED TO EACH SIDE OF THE RUN. RESTRAINT DEVICES ARE ALSO REQUIRED ON BOTH RUN JOINTS OF THE TEE ITSELF.

6 RESTRAINT DEVICE FOR PVC PIPE BELL

NO SCALE

1. THRU LINE CONNECTION, WYE
2. THRU LINE CONNECTION, CROSS USED AS TEE
3. DIRECTION CHANGE, TEE USED AS ELBOW
4. DIRECTION CHANGE, ELBOW
5. THRU LINE CONNECTION, TEE
6. BLOCKING OF PLUG, TO INCLUDE BOND BREAKER
7. CHANGE LINE SIZE, REDUCER
8. DIRECTION CHANGE, CROSS USED AS ELBOW
9. DIRECTION CHANGE, BEND

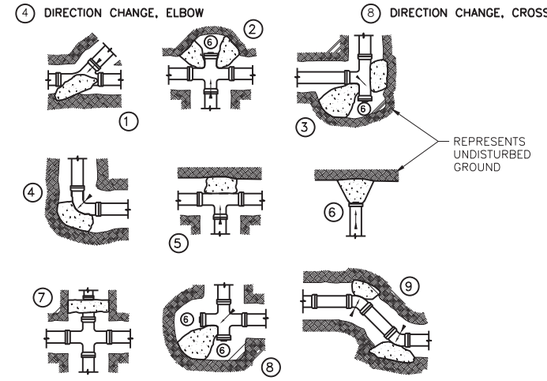

MINIMUM BEARING SURFACE AREA (SQ. FT.)					
SIZE OF MAIN	HORIZONTAL BENDS				TEE OR DEAD END PLUG
	11.25°	22.5°	45°	90°	
4"	0.00	1.00	1.00	2.50	1.50
6"	0.00	1.25	2.25	5.00	3.00
8"	0.00	2.00	4.00	8.00	5.25
12"	2.25	4.50	8.75	16.25	11.25
16"	3.75	7.50	14.50	24.00	19.00
20"	5.00	10.00	19.50	35.50	25.00
24"	7.00	14.00	27.75	51.00	36.00

NOTES:
1. BLOCKING NOT SHOWN MUST BE APPROVED BY ENGINEER.
2. BEARING SURFACE AREAS SHOWN IN THE TABLE ARE MINIMUMS.
3. BASED ON 150 PSI INTERNAL PIPE PRESSURE PLUS WATER HAMMER: 4", 6", 8" AND 12" WATER HAMMER=110 PSI; 16", 20" AND 24" WATER HAMMER=70 PSI.
4. TABLE VALUES BASED ON 3,000 PSF SOIL BEARING CAPACITY.
5. ALL FITTINGS AND COUPLINGS SHALL BE SET ON A CONCRETE BLOCK ALONG WITH THE THRUST BLOCKING AS SHOWN.
6. CONCRETE FOR THRUST BLOCKING TO CONFORM TO SPECIFICATION SECTION 03 3000.

8 THRUST BLOCKING

NO SCALE - CITY OF DICKINSON DETAIL NO. C5.06

Fittings Table	
Item Description	Weight (lbs)
12"x8" TEE	340
8"x8" TEE	235
8"x6" TEE	175
6"x6" TEE	125
12" - 45° BEND	215
12" - 22.5° BEND	220
8" - 90° BEND	125
8" - 45° BEND	110
8" -22.5° BEND	110
6"-45° BEND	75
6"-22.5° BEND	75
8x6" REDUCER	95
12" PLUG	85
8" PLUG	45

7 FITTING WEIGHTS

NO SCALE

Watermain Details

ND 22 and 8th St S Intersection

REGISTERED PROFESSIONAL ENGINEER
SCOTT M. SCHNEIDER
PE-5347
DATE 2025.12.17 07:56:24-07'00'
NORTH DAKOTA

STATE	PROJECT NO.	SECTION NO.	SHEET NO.
ND	HEN-5-022(144)069	57	3

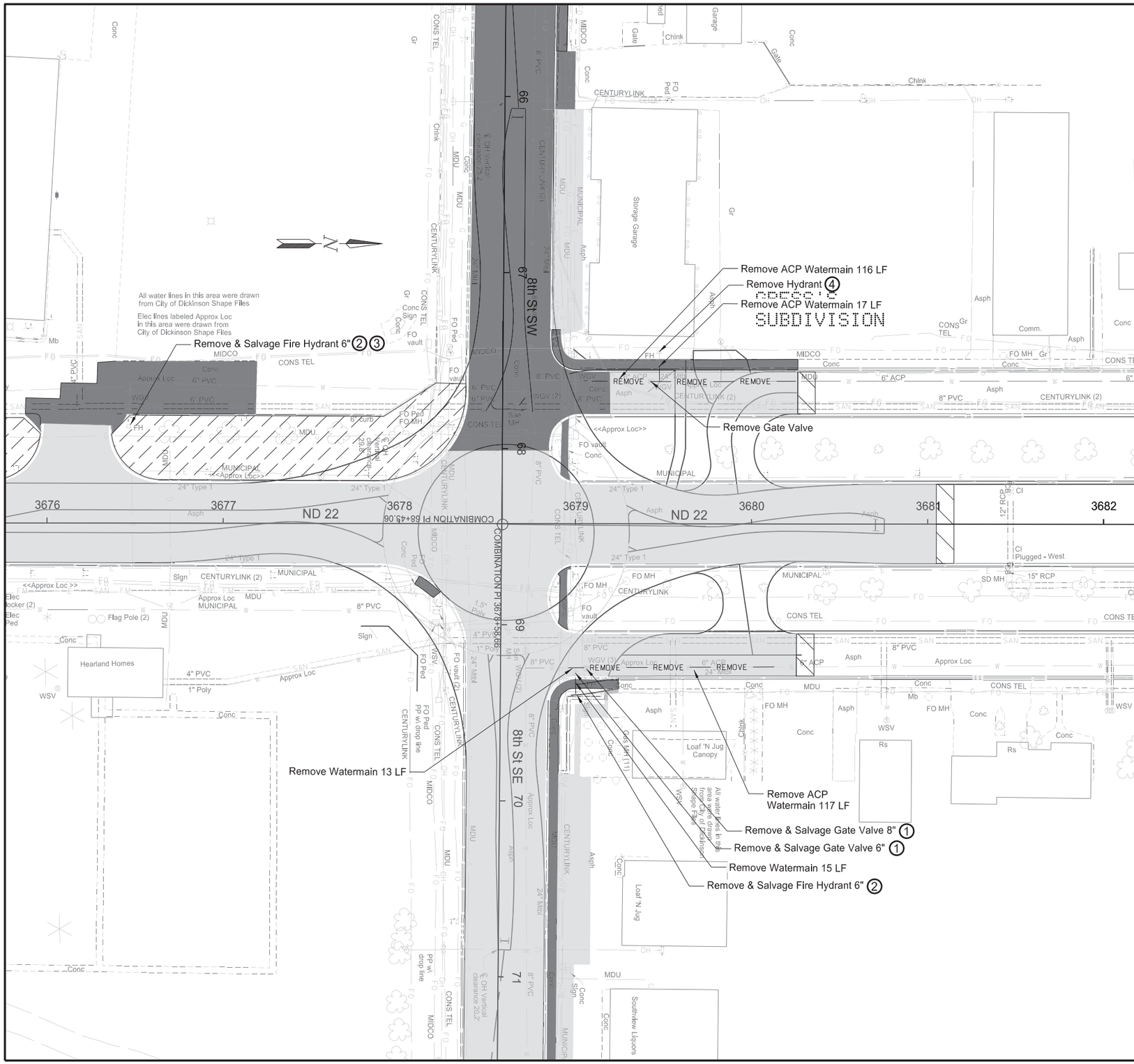

SPEC	CODE	BID ITEM	QTY	UNIT
HEN-5-022(144)069				
724	0402	SALVAGE 6IN HYDRANT		
		Sta 3676+46 - 55' Lt	1	EA
		Sta 3679+00 - 96' Rt	1	EA
724	0430	REMOVE HYDRANT		
		Sta 3679+48 - 98' Lt	1	EA
202	0174	REMOVAL OF PIPE ALL TYPES AND SIZES		
		Sta 3678+96 - 81' Rt to 3679+09 - 81' Rt	13	LF
		Sta 3679+00 - 81' Rt to 3679+00 - 96' Rt	15	LF
Local Only				
202	0500	ACP WATERMAIN REMOVAL		
		Sta 3679+09 - 81' Lt to 3680+25 - 81' Lt	116	LF
		Sta 3679+09 - 81' Rt to 3680+26 - 81' Rt	117	LF
		Sta 3679+48 - 81' Lt to 3679+48 - 98' Lt	17	LF
724	0270	REMOVE GATE VALVE & BOX		
		Sta 3679+43 - 81' Lt	1	EA

Construction Notes

① Remove and Salvage Gate Valve to be paid for under "Relocate Gate Valve & Box".

② Salvage Hydrant 6" to be reset under "Reset Hydrant".

③ Install temporary plug on existing pipe in Phase 1 incidental to Salvage 6IN Hydrant.

④ Remove hydrant for temporary road in Phase 1and plug hydrant lead. Plugging hydrant lead is incidental to Remove Hydrant.

LEGEND

Removal of Pavement (Bituminous)

Removal of Pavement (Concrete)

Milling Pavement Surface

— REMOVE — Remove Watermain

Watermain Removals

ND 22 and 8th St S Intersection

REGISTERED PROFESSIONAL ENGINEER
SCOTT M. SCHNEIDER
PE-5347
DATE 2025.12.17 07:56:37-07'00'
NORTH DAKOTA

STATE	PROJECT NO.	SECTION NO.	SHEET NO.
ND	HEN-5-022(144)069	57	4

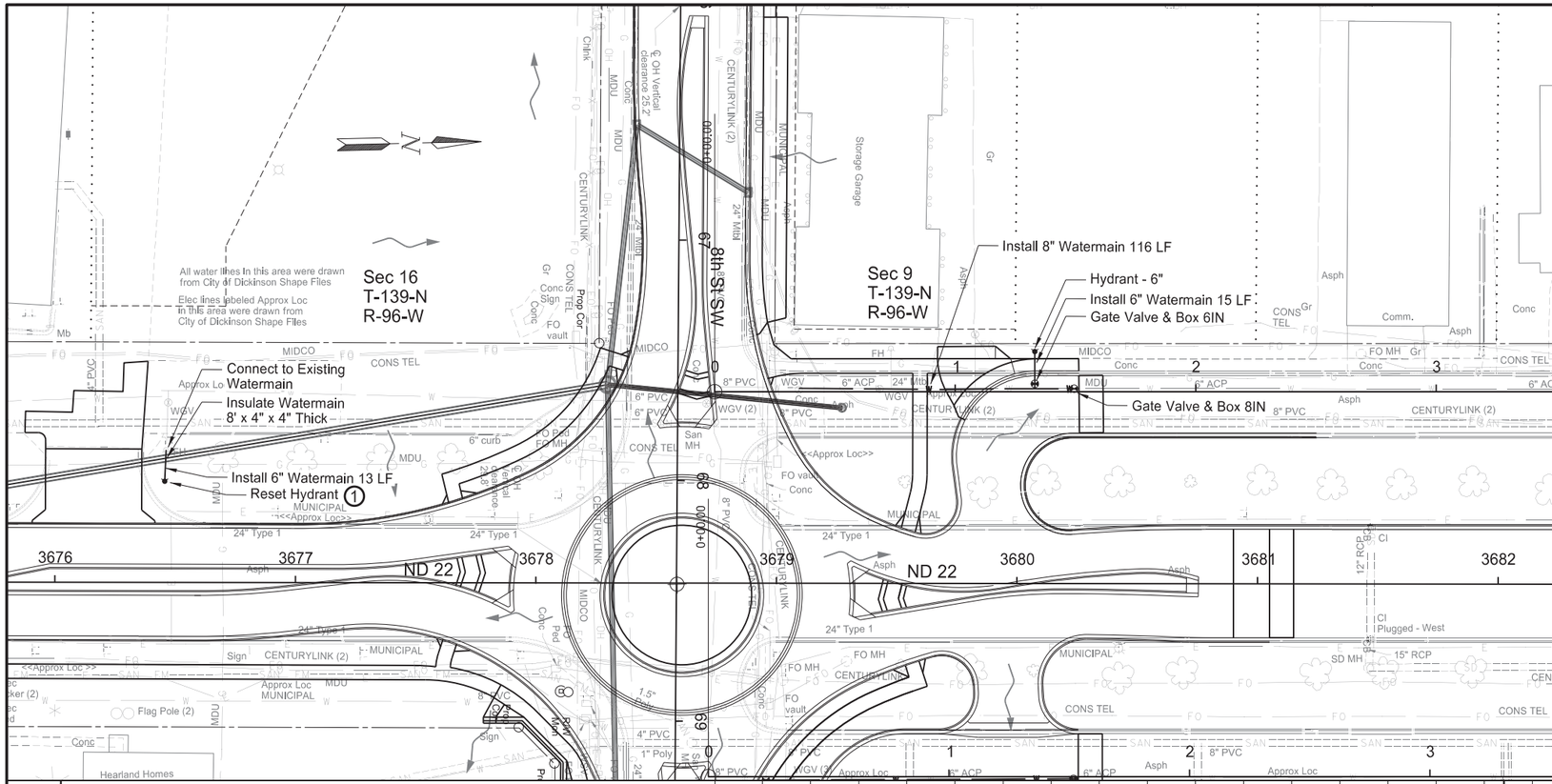

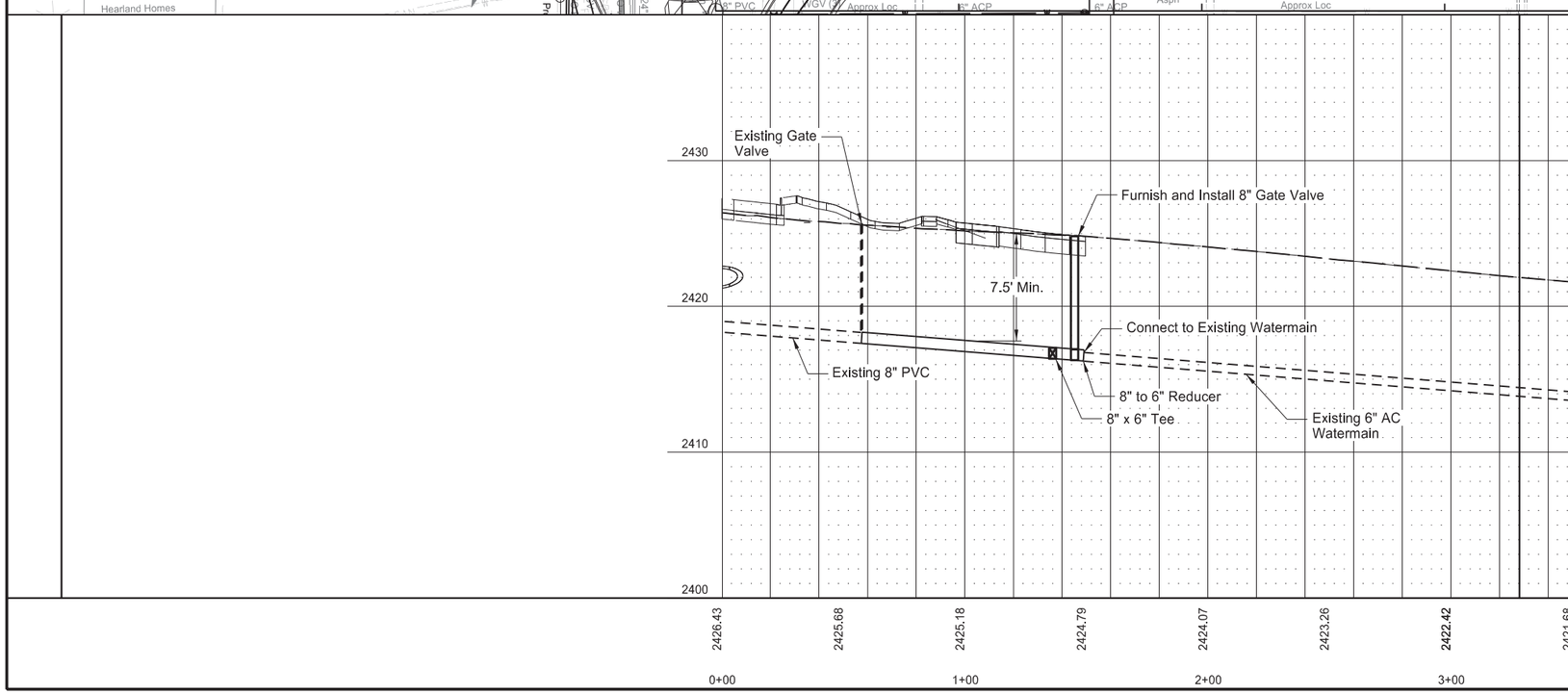

SPEC	CODE	BID ITEM	QTY	UNIT
HEN-5-022(144)069				
724	0411	6IN HYDRANT		
		Sta 3680+07 - 96' Lt	1	EA
724	0425	RESET HYDRANT		
		Sta 3676+46 - 42' Lt	1	EA
724	0810	WATERMAIN 6IN PVC		
		Sta 3676+46 - 46' Lt to 3676+46 - 55' Lt	13	LF
724	0944	CONNECTION TO EXISTING MAIN		
		Sta 3676+46 - 55' Lt	1	EA
Local Only				
724	0210	FITTINGS-DUCTILE IRON		
			270	LBS
724	0300	GATE VALVE & BOX 6IN		
		Sta 3680+07 - 83' Lt	1	EA
724	0310	GATE VALVE & BOX 8IN		
		Sta 3680+23 - 81' Lt	1	EA
724	0490	SLEEVE 6IN		
			1	EA
724	0810	WATERMAIN 6IN PVC		
		Sta 3680+07 - 81' Lt to 3680+07 - 96' Lt	15	LF
724	0830	WATERMAIN 8IN PVC		
		Sta 3679+09 - 81' Lt to 3680+25 - 81' Lt	116	LF
724	0944	CONNECTION TO EXISTING MAIN		
		Sta 3680+23 - 81' Lt	1	EA
744	0050	INSULATION BOARD		
		Sta 3676+46 - 52' Lt	11	CF

Construction Notes

1 Adjust hydrant reset based on storm location to maintain 4 feet between edge of storm sewer and hydrant riser.

Watermain Plan and Profile

ND 22 and 8th St S Intersection

REGISTERED PROFESSIONAL ENGINEER
SCOTT M. SCHNEIDER
PE-5347
DATE 2025.12.17 07:56:50-07'00'
NORTH DAKOTA

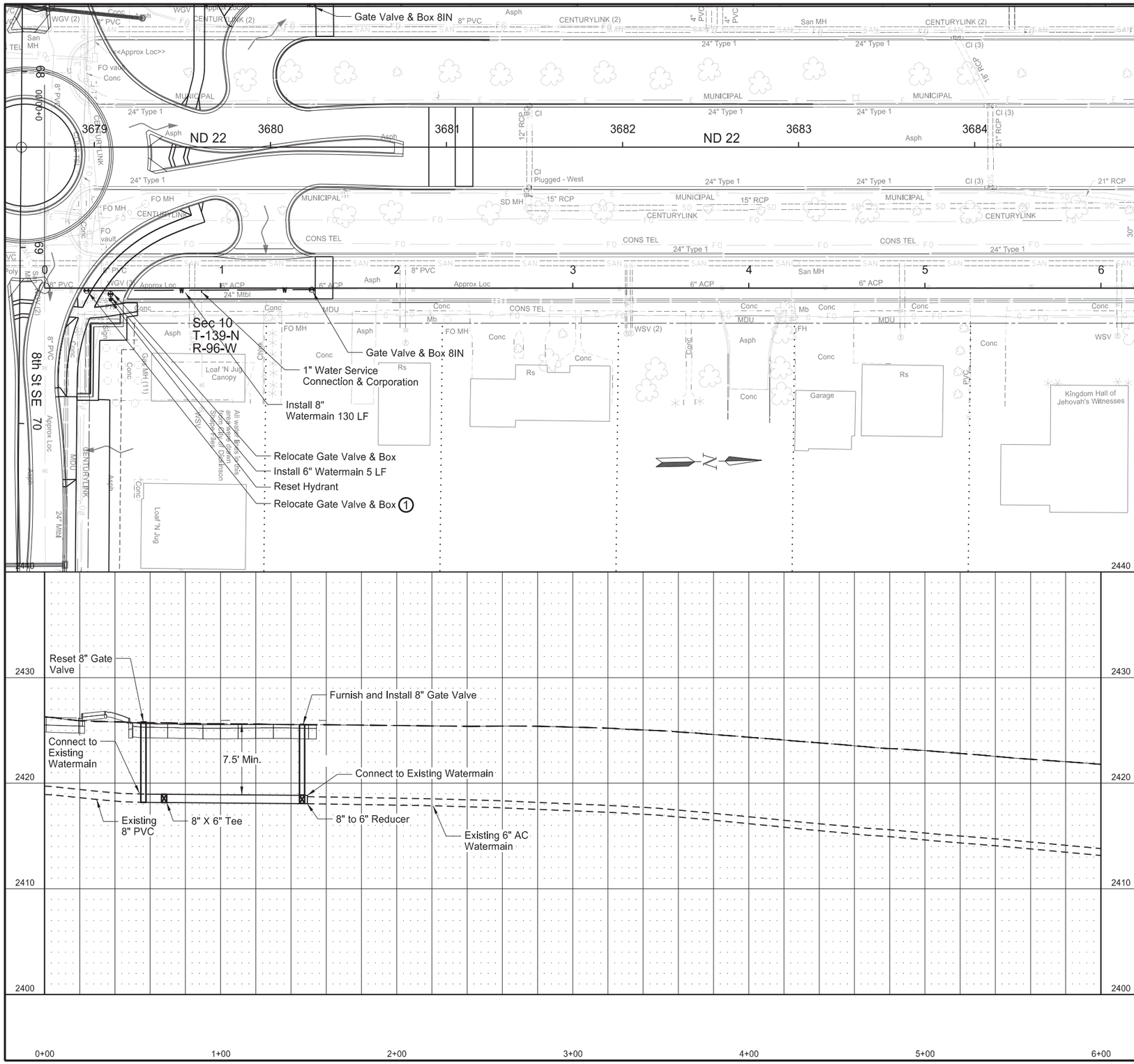

STATE	PROJECT NO.	SECTION NO.	SHEET NO.
ND	HEN-5-022(144)069	57	5

SPEC	CODE	BID ITEM	QTY	UNIT
HEN-5-022(160)903				
724	0375	RELOCATE GATE VALVE & BOX		
		Sta 3678+96 - 81' Rt	1	EA
		Sta 3679+09 - 83' Rt	1	EA
724	0425	RESET HYDRANT		
		Sta 3679+09 - 86' Rt	1	EA
724	0810	WATERMAIN 6IN PVC		
		Sta 3679+09 - 81' Rt to 3679+09 - 86' Rt	5	LF
724	0830	WATERMAIN 8IN PVC		
		Sta 3678+96 - 81' Rt to 3679+09 - 81' Rt	13	LF
724	0944	CONNECTION TO EXISTING MAIN		
		Sta 3678+96 - 81' Rt	1	EA
Local Only				
724	0210	FITTINGS-DUCTILE IRON		
			270	LBS
724	0310	GATE VALVE & BOX 8IN		
		Sta 3680+26 - 81' Rt	1	EA
724	0490	SLEEVE 6IN		
			1	EA
724	0830	WATERMAIN 8IN PVC		
		Sta 3679+09 - 81' Rt to 3680+26 - 81' Rt	117	LF
724	0944	CONNECTION TO EXISTING MAIN		
		Sta 3680+26 - 81' Rt	1	EA
724	0955	WATER SERVICE CONNECTION 1IN		
		Sta 3679+61 - 81' Rt	1	EA
724	7017	1IN CORPORATION-NEW SERVICE		
		Sta 3679+61 - 81' Rt	1	EA

General Notes

1. Existing service to 797 South Main is 1" Copper.

Construction Notes

1 Gate Valve to be located between back of curb and sidewalk.

Watermain Plan and Profile

ND 22 and 8th St S Intersection

REGISTERED PROFESSIONAL ENGINEER
SCOTT M. SCHNEIDER
PE-5347
DATE 2025.12.17 07:57:03-07'00'
NORTH DAKOTA

STATE	PROJECT NO.	SECTION NO.	SHEET NO.
ND	HEN-5-022(144)069	60	1

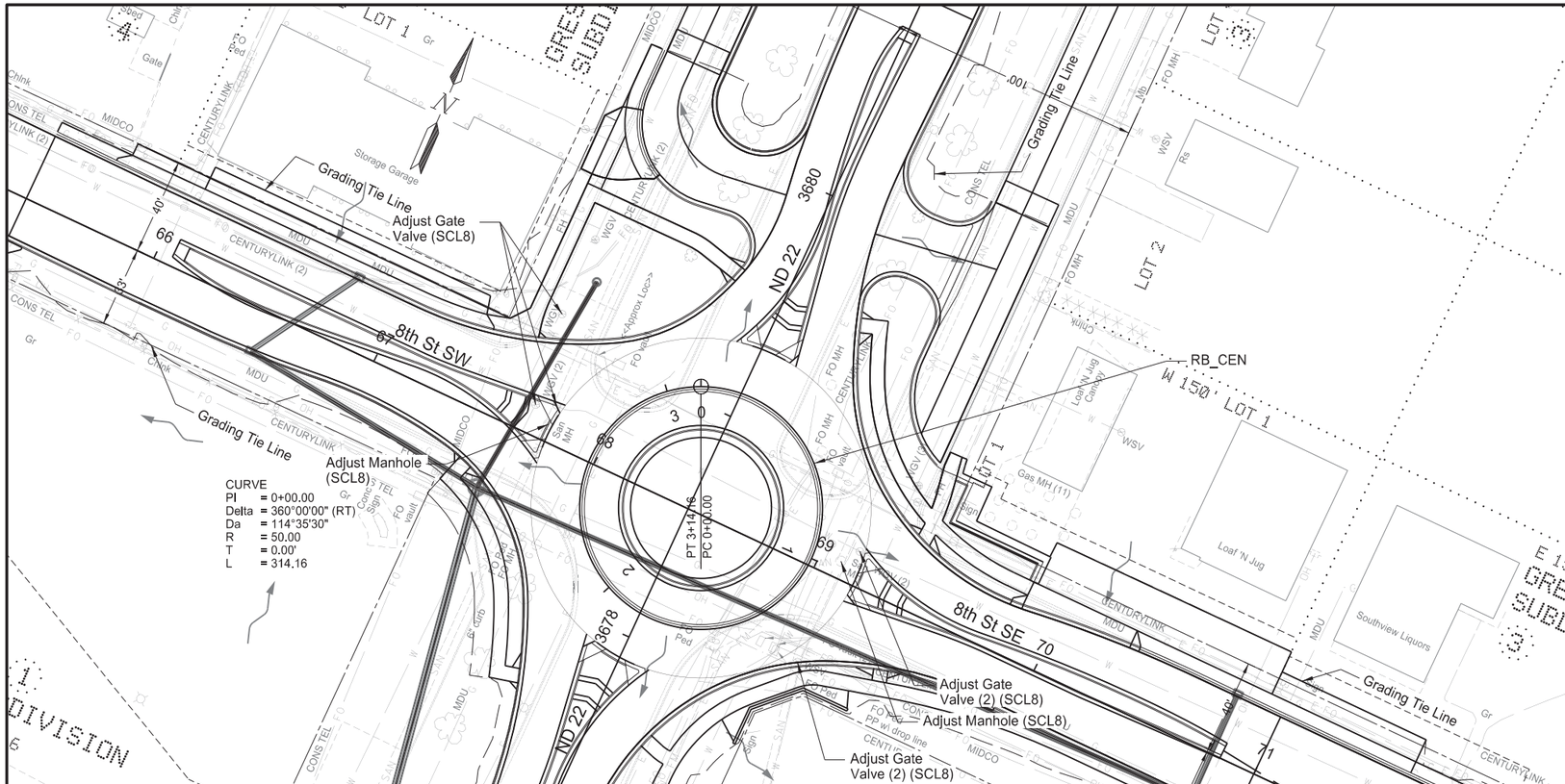

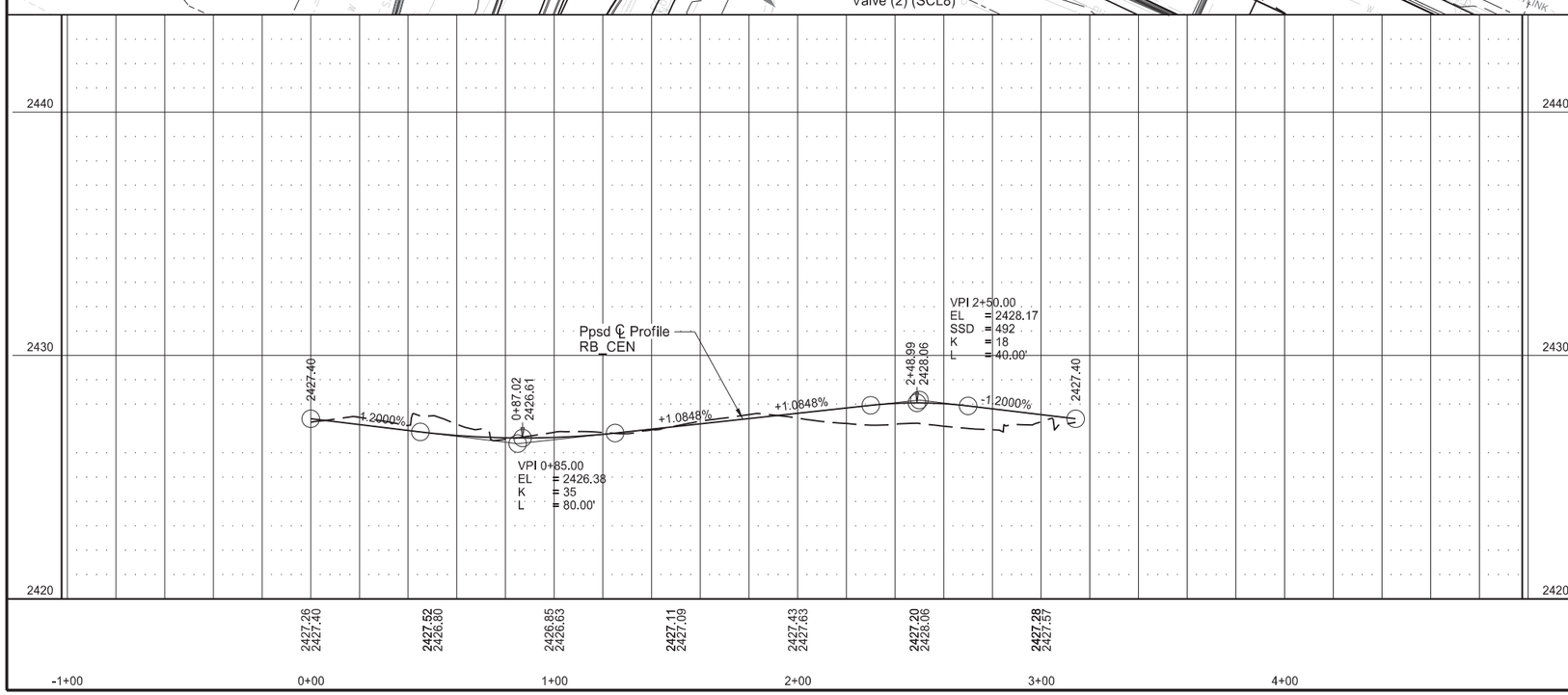

SPEC	CODE	BID ITEM	QTY	UNIT
HEN-5-022(144)069				
722	6140	ADJUST GATE VALVE BOX		
		Sta 67+62 - 50' Lt	1	EA
		Sta 67+68 - 12' Lt	1	EA
		Sta 67+76 - 15' Lt	1	EA
		Sta 69+10 - 38' Rt	2	EA
		Sta 69+14 - 14' Lt	2	EA
722	6200	ADJUST MANHOLE		
		Sta 67+76 - 7' Lt	1	EA
		Sta 69+09 - 7' Lt	1	EA

Quantities based on SCL8 Alignment

Stationing based on RB_CEN unless otherwise noted.

Plan and Profile

ND 22 and 8th St S Intersection

REGISTERED PROFESSIONAL ENGINEER
DAWN L.S. MICHEL
PE-8029
DATE 2025.12.18 08:56:00 -06'00'
NORTH DAKOTA

STATE	PROJECT NO.	SECTION NO.	SHEET NO.
ND	HEN-5-022(144)069	60	2

CURVE	CURVE	CURVE	CURVE	CURVE
PI = 12+57.46	PI = 13+20.39	PI = 13+80.59	PI = 13+52.55	PI = 14+52.52
Delta = 29°22'33" (LT)	Delta = 35°06'30" (LT)	Delta = 22°43'30" (LT)	Delta = 10°04'19" (LT)	Delta = 05°00'04" (RT)
Da = 35°28'38"	Da = 80°41'56"	Da = 67°46'25"	Da = 45°25'37"	Da = 09°09'10"
R = 161.50	R = 71.00	R = 84.54	R = 126.13	R = 626.00
T = 42.33'	T = 22.46'	T = 16.99'	T = 11.11'	T = 27.34'
L = 82.80	L = 43.51	L = 33.53	L = 22.17	L = 54.64

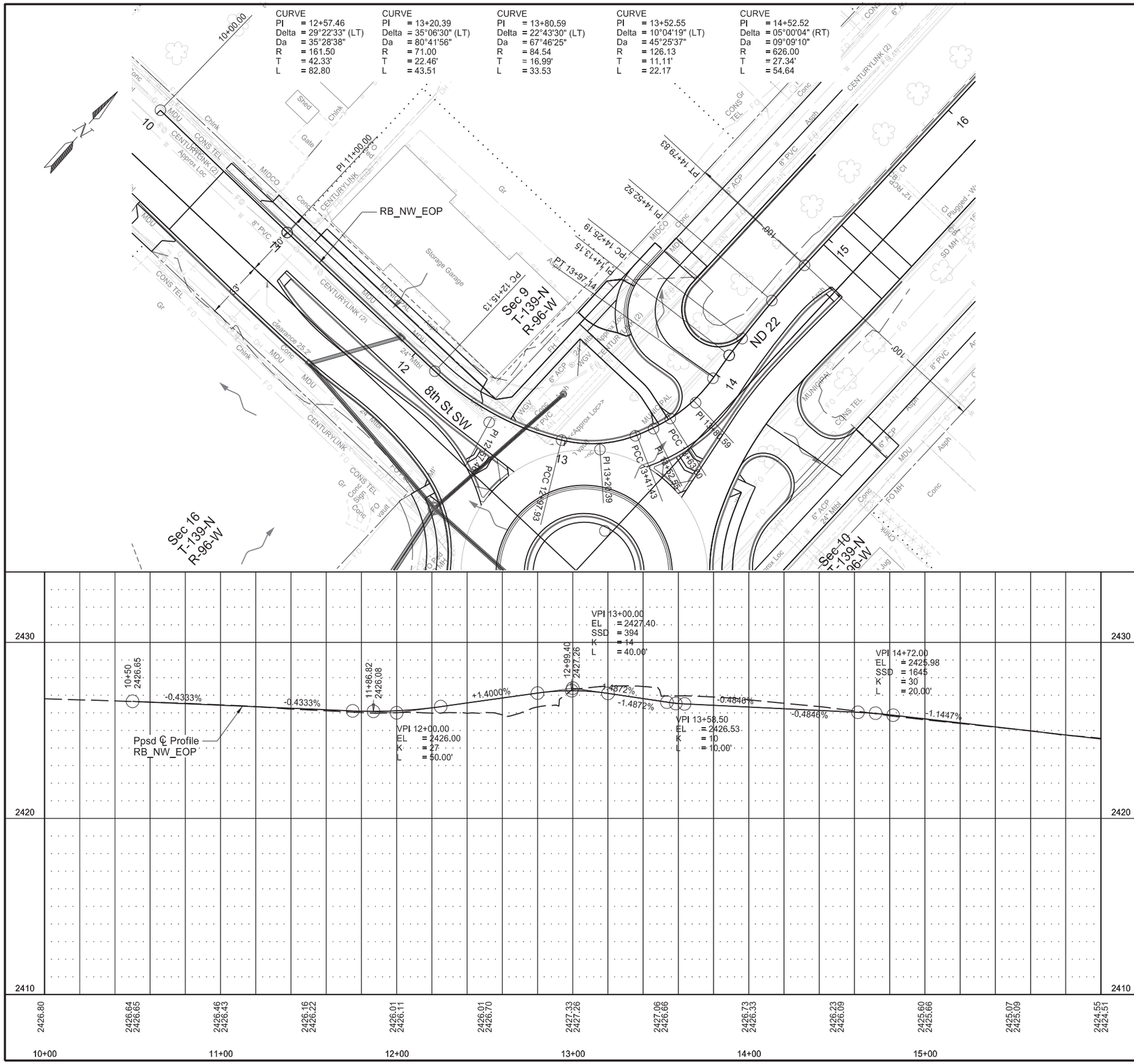

Stationing based on RB_NW_EOP

Plan and Profile

ND 22 and 8th St S Intersection

REGISTERED PROFESSIONAL ENGINEER
DAWN L.S. MICHEL
PE-8029
DATE 2025.12.18 08:56:12 -06'00'
NORTH DAKOTA

STATE	PROJECT NO.	SECTION NO.	SHEET NO.
ND	HEN-5-022(144)069	60	3

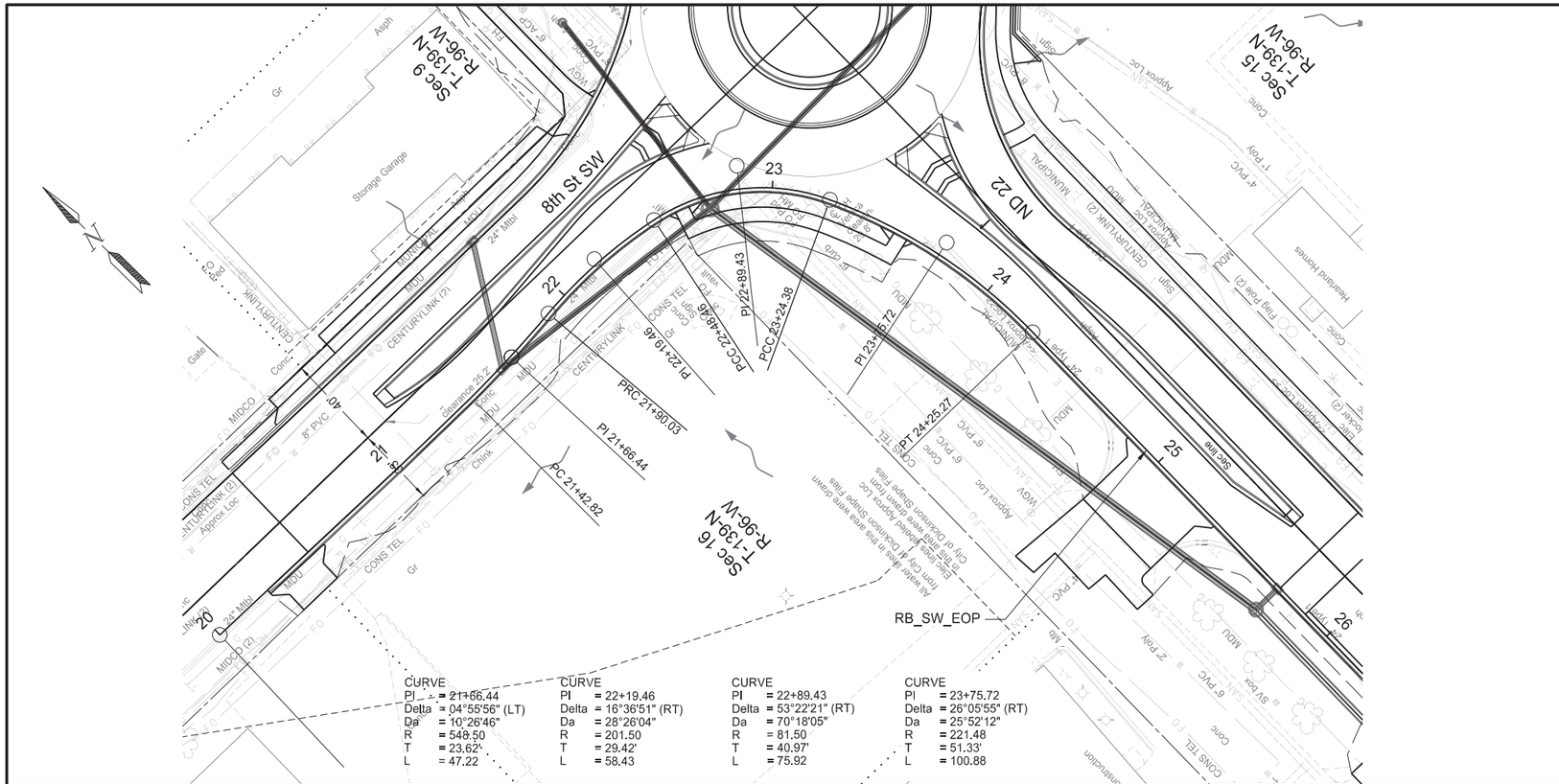

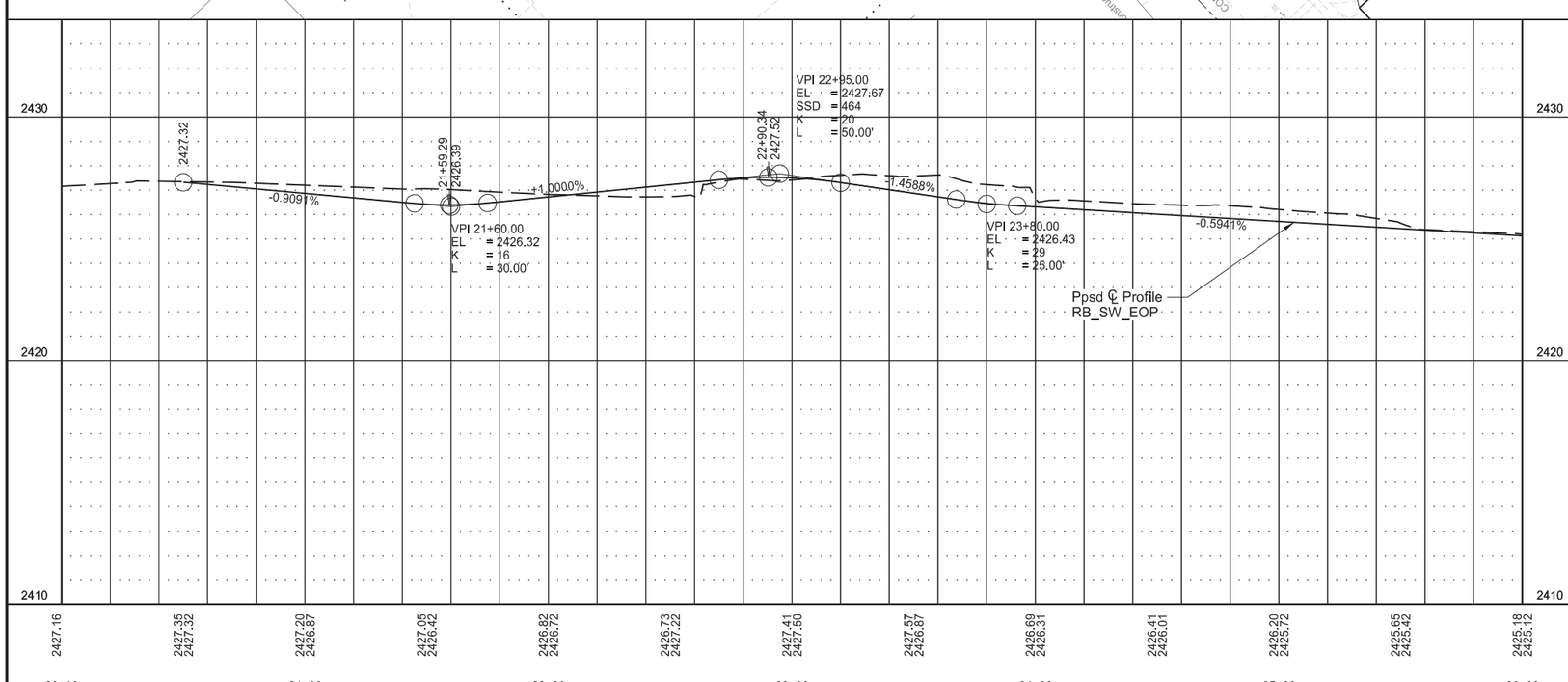

Stationing based on RB_SW_EOP

Plan and Profile

ND 22 and 8th St S Intersection

REGISTERED PROFESSIONAL ENGINEER
DAWN L.S. MICHEL
PE-8029
DATE 2025.12.18 08:56:25 -06'00'
NORTH DAKOTA

STATE	PROJECT NO.	SECTION NO.	SHEET NO.
ND	HEN-5-022(144)069	60	4

CURVE
PI = 30+16.40
Delta = 02°27'56" (RT)
Da = 16°26'26"
R = 348.50
T = 7.50'
L = 15.00

CURVE
PI = 30+47.21
Delta = 02°15'04" (LT)
Da = 04°49'40"
R = 1186.76
T = 23.32'
L = 46.62

CURVE
PI = 31+14.37
Delta = 24°33'22" (LT)
Da = 28°26'05"
R = 201.50
T = 43.85'
L = 86.36

CURVE
PI = 31+86.37
Delta = 33°59'39" (LT)
Da = 59°22'26"
R = 96.50
T = 29.50'
L = 57.25

CURVE
PI = 32+51.50
Delta = 38°40'09" (LT)
Da = 53°47'56"
R = 106.50
T = 37.37'
L = 71.88

CURVE
PI = 33+22.29
Delta = 07°34'06" (RT)
Da = 10°26'45"
R = 548.50
T = 36.28'
L = 72.45

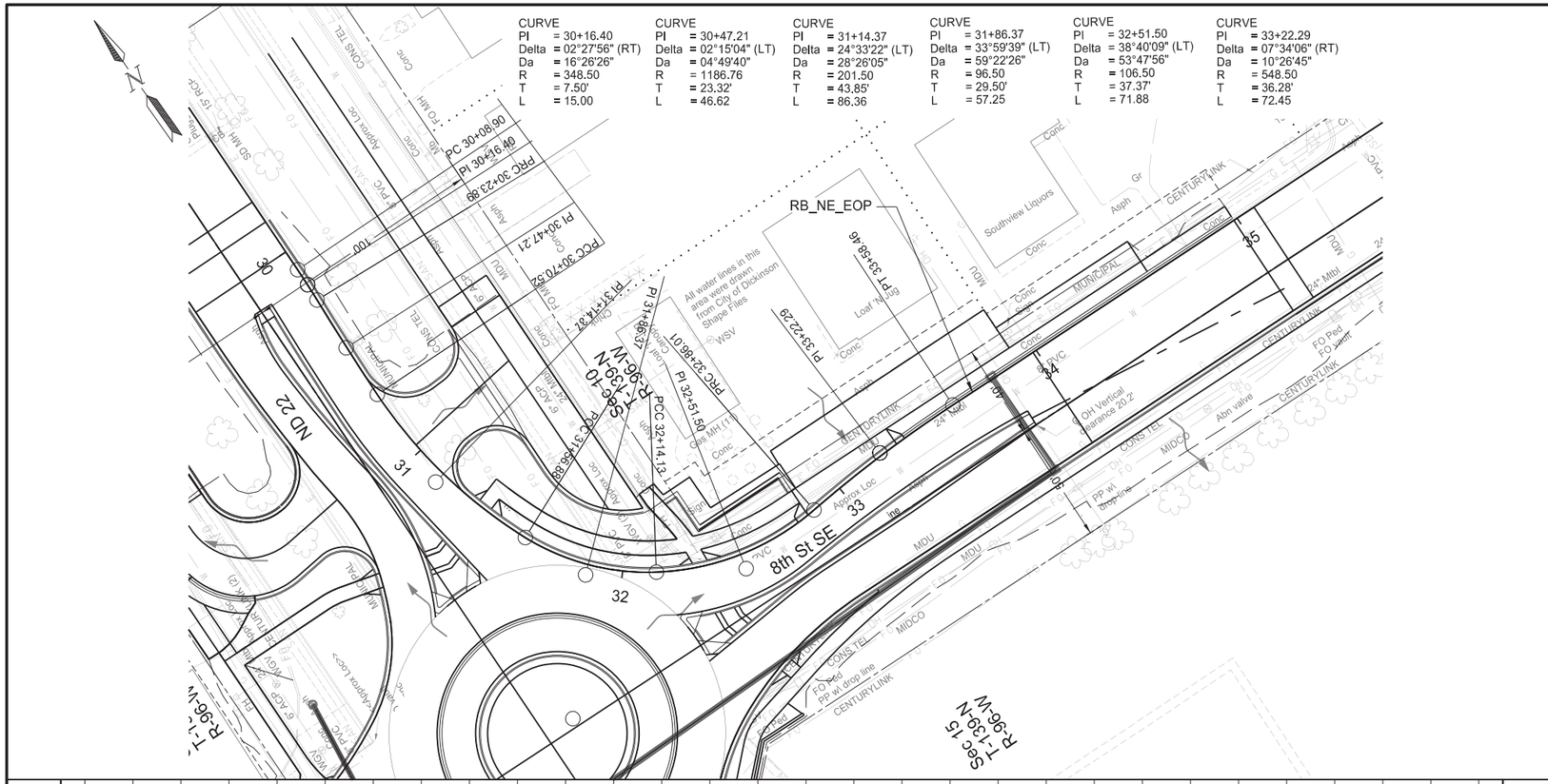

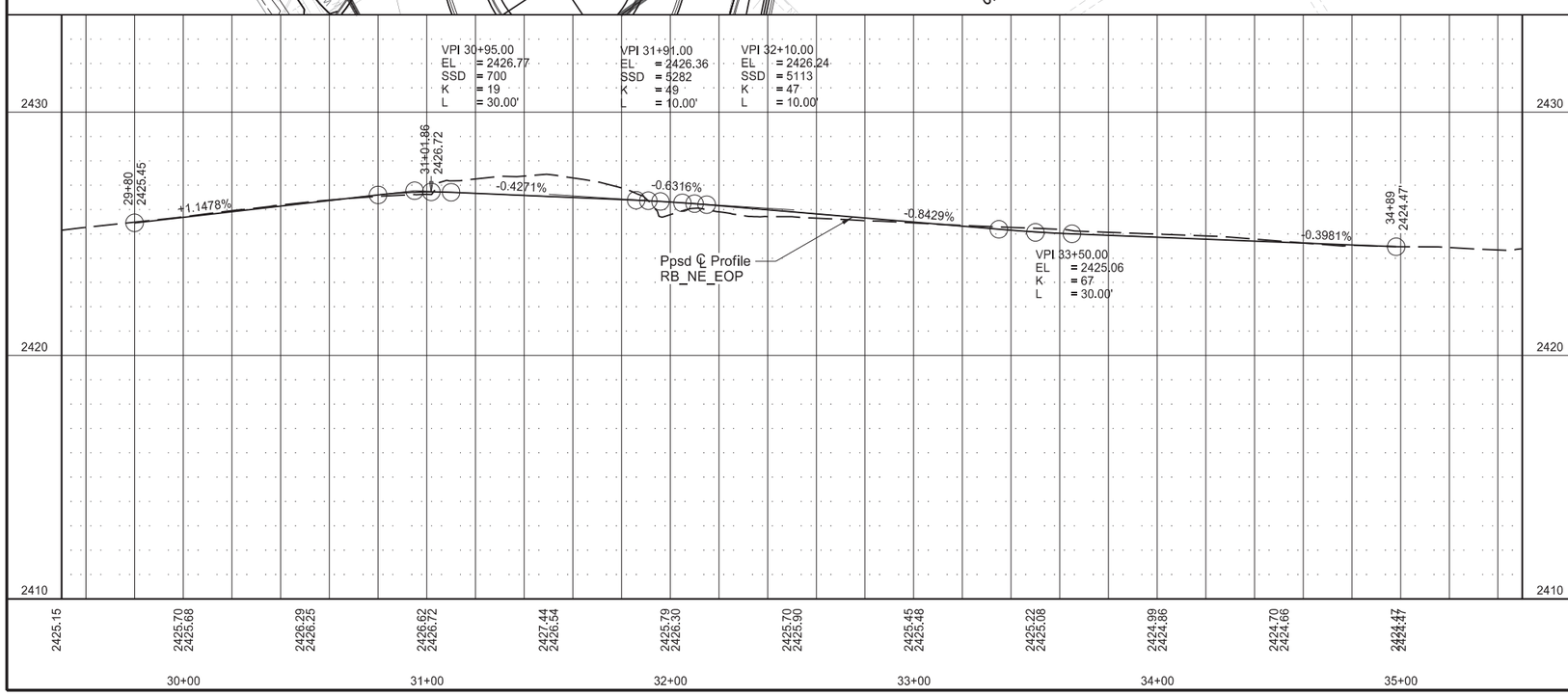

Stationing based on RB_NE_EOP

Plan and Profile

ND 22 and 8th St S Intersection

REGISTERED PROFESSIONAL ENGINEER
DAWN L.S. MICHEL
PE-8029
DATE 2025.12.18 08:56:38 -06'00'
NORTH DAKOTA

STATE	PROJECT NO.	SECTION NO.	SHEET NO.
ND	HEN-5-022(144)069	60	5

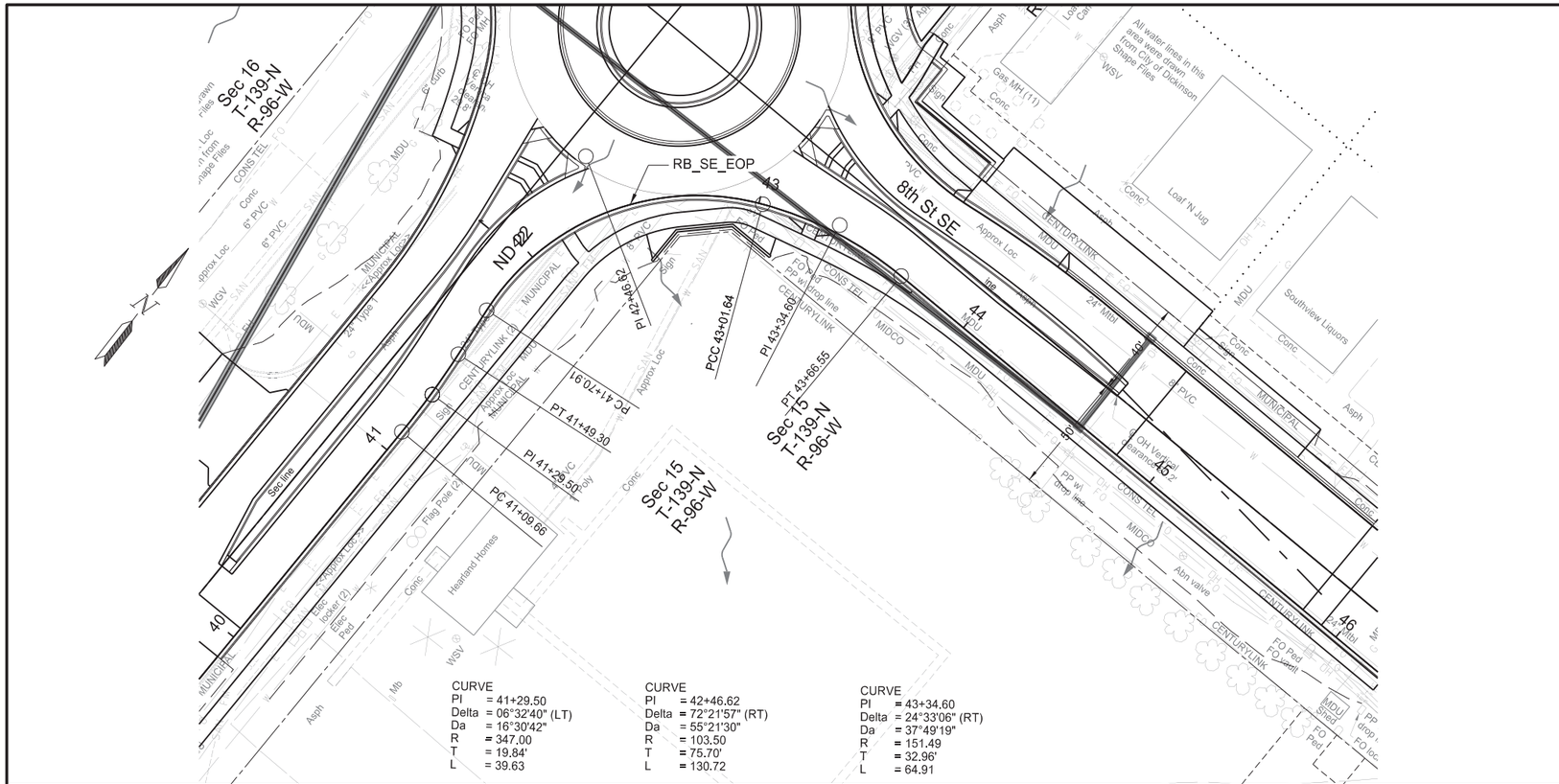

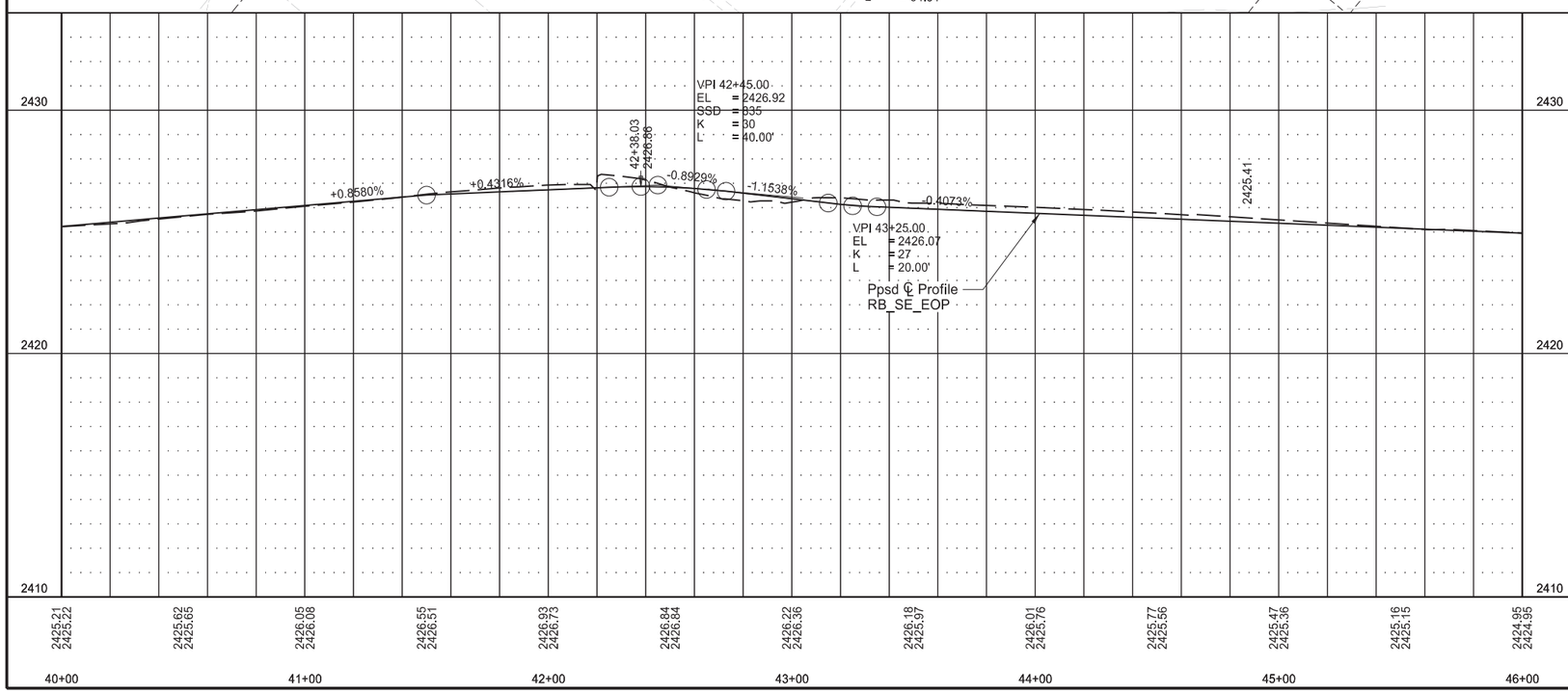

Stationing based on RB_SE_EOP

Plan and Profile

ND 22 and 8th St S Intersection

REGISTERED PROFESSIONAL ENGINEER
DAWN L.S. MICHEL
PE-8029
DATE 2025.12.18 08:56:51 -06'00'
NORTH DAKOTA

STATE	PROJECT NO.	SECTION NO.	SHEET NO.
ND	HEN-5-022(144)069	75	1

Wetland Impact Table

Wetland Number	Location	Wetland Type	Wetland Feature	USACE Jurisdictional Wetlands[2]	Wetland Impact: Wetland Impacts Acre(s)			Wetland Mitigation: Mitigation Proposed	
					Temp.	Perm. (Fill/Drain)	Perm. (Cut)	EO 11990	USACE
5-022(144)069 PCN 23691									
1a	Sec.16, T139N, R96W	Basin	Natural	Yes				N	N
1b	Sec.15, T139N, R96W	Basin	Natural	Yes				N	N
				Totals	0.000	0.000			

Other Waters Impact Table

Number	Location	Type	Feature	USACE Jurisdictional	Impacts to Other Waters: Acres			Linear Feet		
					Temp.	Perm (Fill/Drain)	Perm. (Cut)	Temp.	Perm. (Fill/Drain)	Perm. (Cut)
				Totals						

[2] A Jurisdictional Determination was issued by the USACE on 11/14/2023: NWO-2004-60554-BIS, PCN23691

Impact Summary Table

Permanent Impact Summary		Temporary Impacts and additional information	
Wetland Type	Total Acre(s)	WaterType	Total Acre(s)
Natural/JD (Fill/Drain)	0.000	Temporary Wetland JD	0.000
Natural/Non-JD (Fill/Drain)	0.000	Non-JD Wetland Temporary	0.000
Created/JD (Fill/Drain)	0.000	Total	
Created /Non-JD (Fill/Drain))	0.000	Permanent OW	
Total	0.000	Temporary OW	
JD Natural (Cut)		Permanent OW-d	
JD Artificial (Cut)		Temporary OW-d	
Non-JD Natural (Cut)			
Non-JD Artificial (Cut)			
Total	0.000		

Wetland Impacts

ND 22 and 8th St S Intersection

Impact Table

REGISTERED PROFESSIONAL ENGINEER
DAWN L.S. MICHEL
PE-8029
DATE 2025.12.18 08:57:26 -06'00'
NORTH DAKOTA

STATE	PROJECT NO.	SECTION NO.	SHEET NO.
ND	HEN-5-022(144)069	75	2

No wetland impacts this sheet

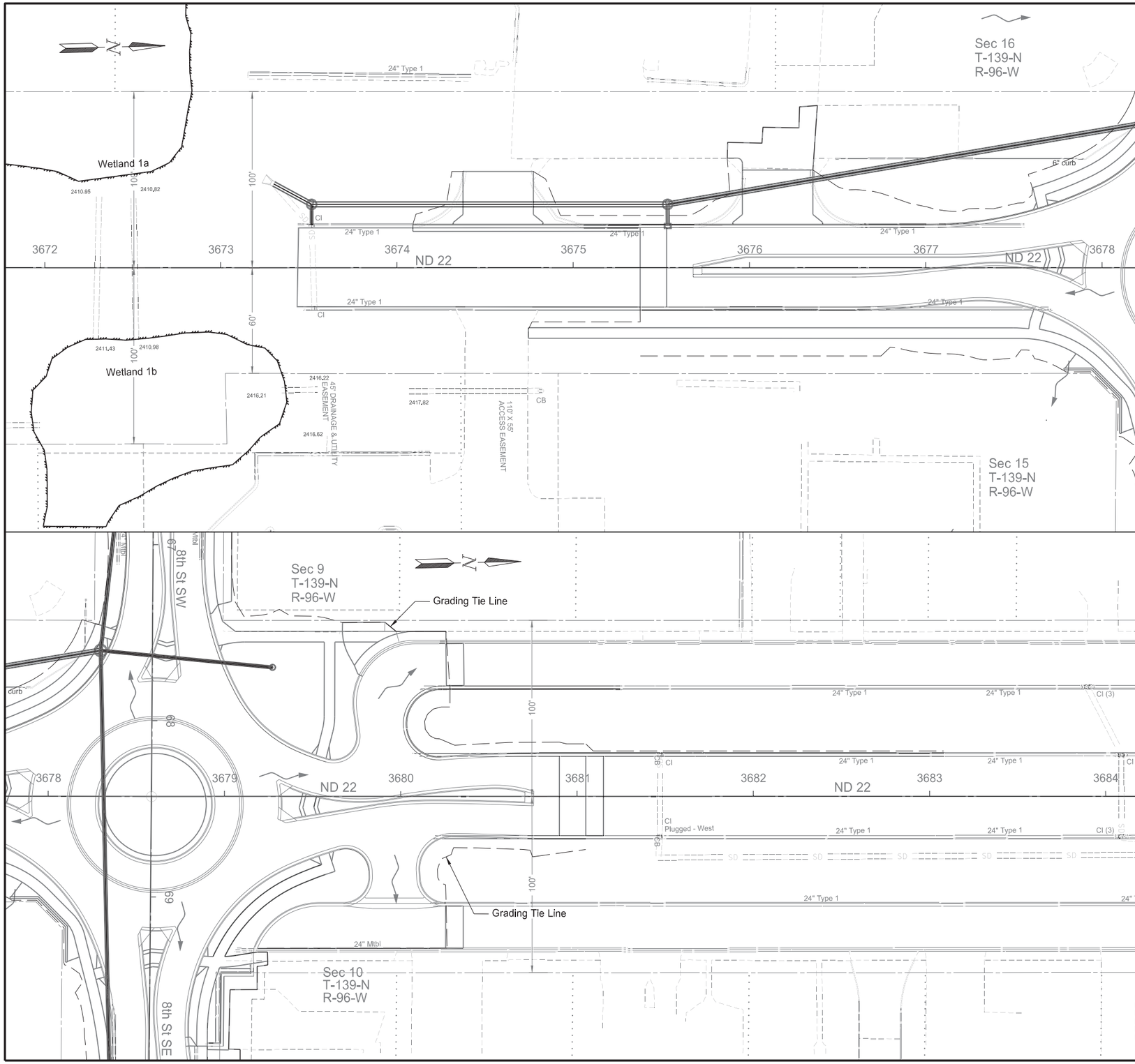

Legend

- Permanent Wetland Fill / Drain Impact
- Temporary Wetland Impact
- Grading Tie Line (Fill)
- Grading Tie Line (Cut)
- Exst Delineated Wetland - JD

Wetland Impacts

ND 22 and 8th St S Intersection

Sta 3671+77.5 to Sta 3684+22.5

REGISTERED PROFESSIONAL ENGINEER
DAWN L.S. MICHEL
PE-8029
DATE 2025.12.18 08:57:40 -06'00'
NORTH DAKOTA

STATE	PROJECT NO.	SECTION NO.	SHEET NO.
ND	HEN-5-022(144)069	75	3

No wetland impacts this sheet.

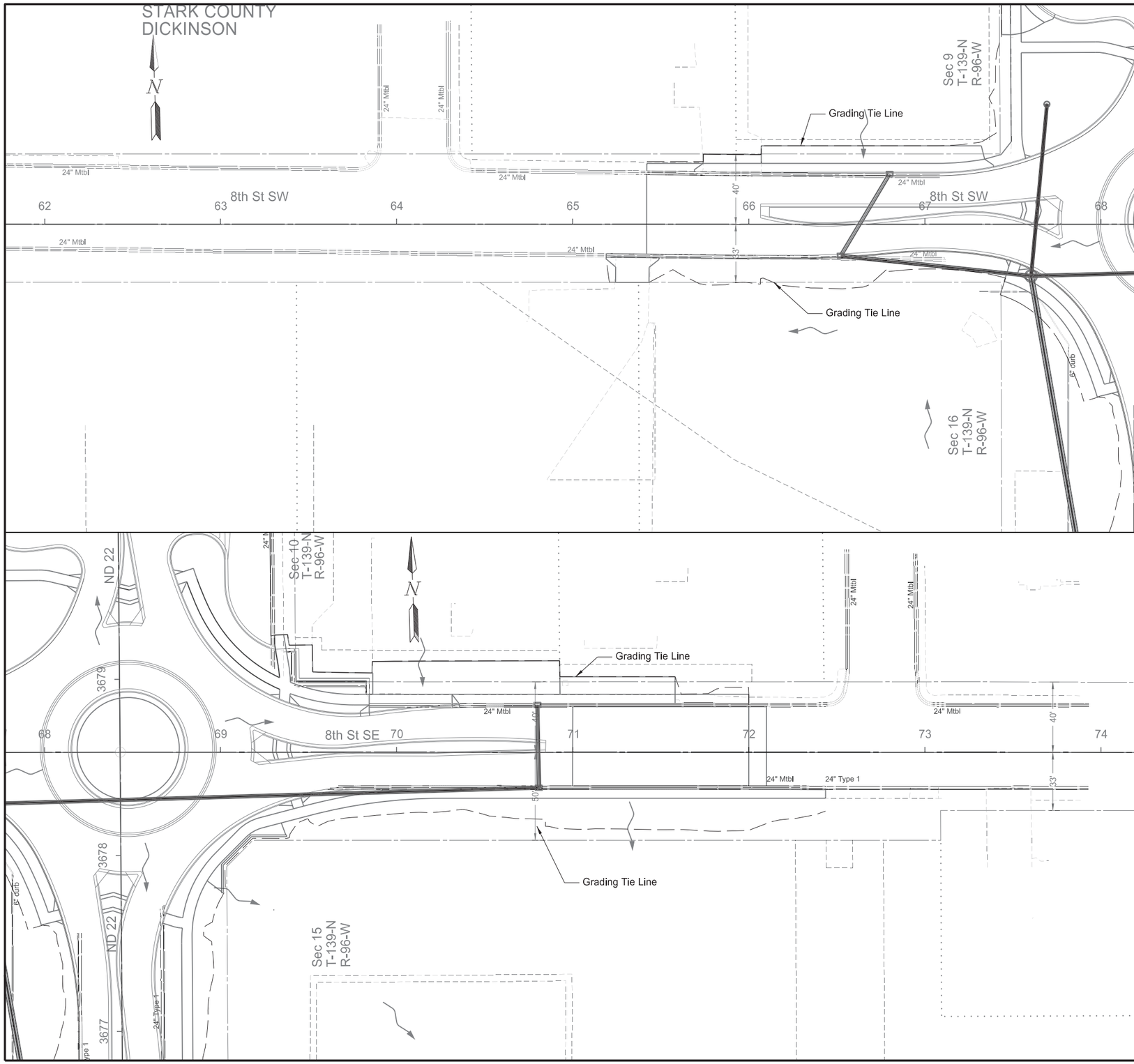

Legend

- Permanent Wetland Fill / Drain Impact
- Temporary Wetland Impact
- Grading Tie Line (Fill)
- Grading Tie Line (Cut)
- Exst Delineated Wetland - JD

Wetland Impacts

ND 22 and 8th St S Intersection

Sta 61+77.5 to Sta 74+67.5

REGISTERED PROFESSIONAL ENGINEER
DAWN L.S. MICHEL
PE-8029
DATE 2025.12.18 08:57:56 -06'00'
NORTH DAKOTA

STATE	PROJECT NO.	SECTION NO.	SHEET NO.
ND	HEN-5-022(144)069	76	1

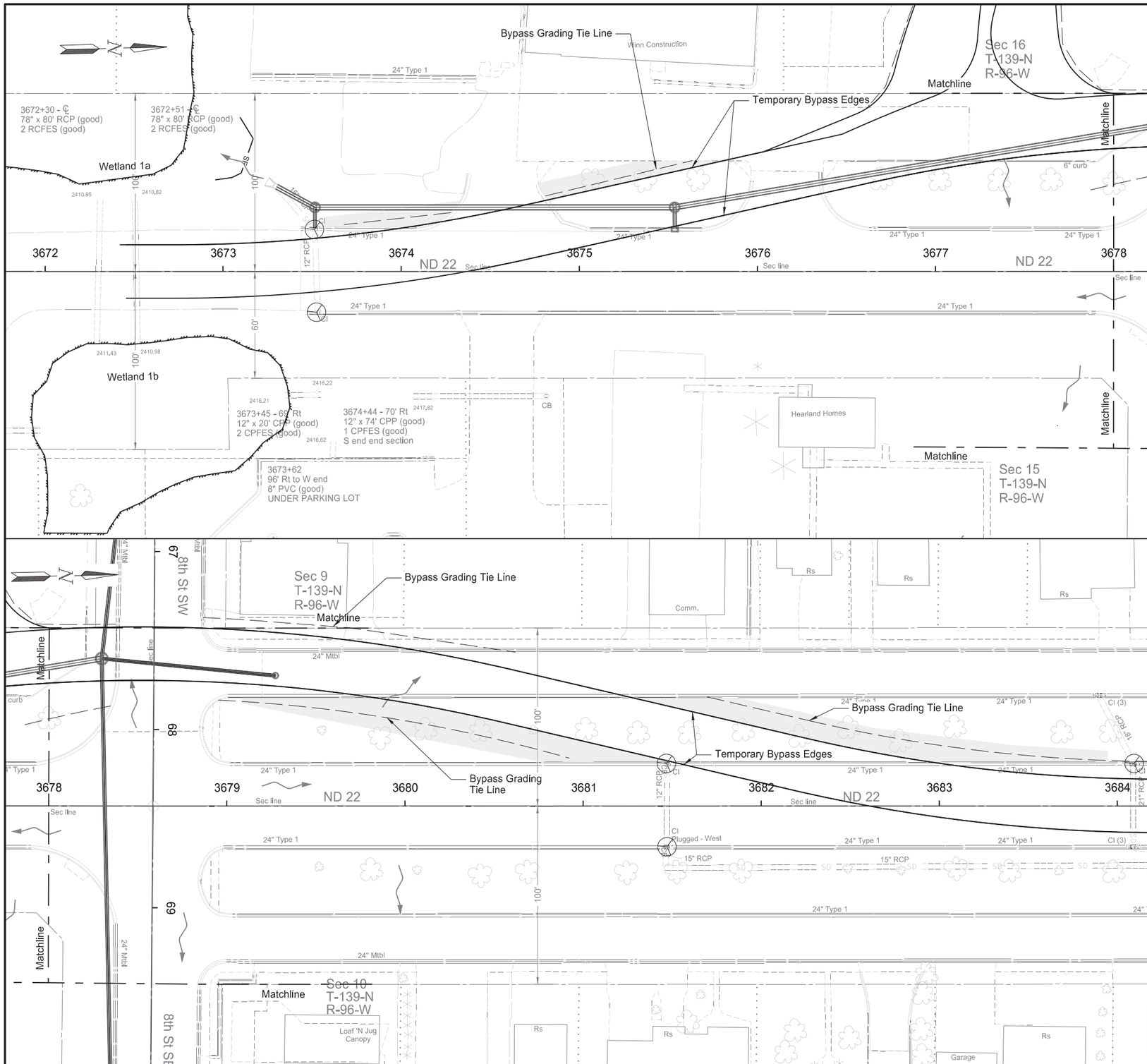

SPEC	CODE	BID ITEM	QTY	UNIT
HEN-5-022(144)069				
251	2000	TEMPORARY COVER CROP		
		Various Locations	0.20	ACRE
253	0201	HYDRAULIC MULCH		
		Various Locations	0.20	ACRE
260	0200	SILT FENCE SUPPORTED		
		Sta 3672+83 to Sta 3672+93	75	LF
708	1540	INLET PROTECTION-SPECIAL		
		Various Locations	5	EA

Legend

- Fiber Rolls 12IN
- SF Silt Fence Supported
- Grading Tie Line (Fill)
- Grading Tie Line (Cut)
- Grading Tie Line (Transition)
- Exst Delineated Wetland - JD
- Flow Direction
- Hydraulic Mulch \ Temporary Crop Cover
- Inlet Protection - Special

Temporary Sediment and Erosion Control
Temporary Bypasses

ND 22 and 8th St S Intersection

Sta 3672+00 to Sta 3684+00

REGISTERED PROFESSIONAL ENGINEER
DAWN L.S. MICHEL
PE-8029
DATE 2025.12.18 08:59:04 -06'00'
NORTH DAKOTA

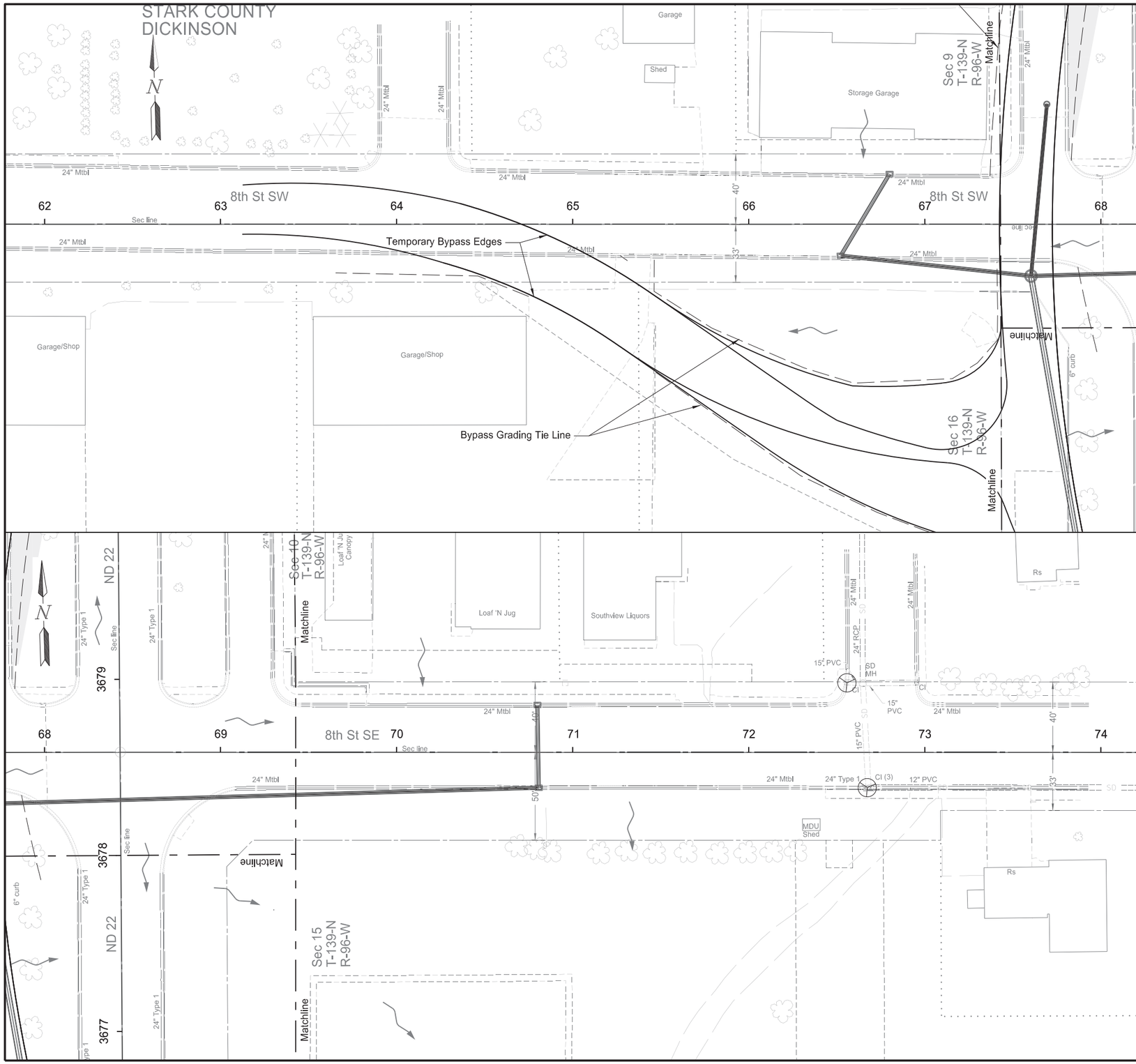

STATE	PROJECT NO.	SECTION NO.	SHEET NO.
ND	HEN-5-022(144)069	76	2

SPEC	CODE	BID ITEM	QTY	UNIT
HEN-5-022(144)069-Local				
708	1540	INLET PROTECTION-SPECIAL Various Locations	2	EA

Legend

- Fiber Rolls 12IN
- Silt Fence Supported
- Grading Tie Line (Fill)
- Grading Tie Line (Cut)
- Grading Tie Line (Transition)
- Exst Delineated Wetland - JD
- Flow Direction
- Hydraulic Mulch \ Temporary Crop Cover
- Inlet Protection - Special

Temporary Sediment and Erosion Control
Temporary Bypasses

ND 22 and 8th St S Intersection

Sta 62+00 to Sta 74+00

REGISTERED PROFESSIONAL ENGINEER
DAWN L.S. MICHEL
PE-8029
DATE 2025.12.18 08:59:21 -06'00'
NORTH DAKOTA

STATE	PROJECT NO.	SECTION NO.	SHEET NO.
ND	HEN-5-022(144)069	76	3

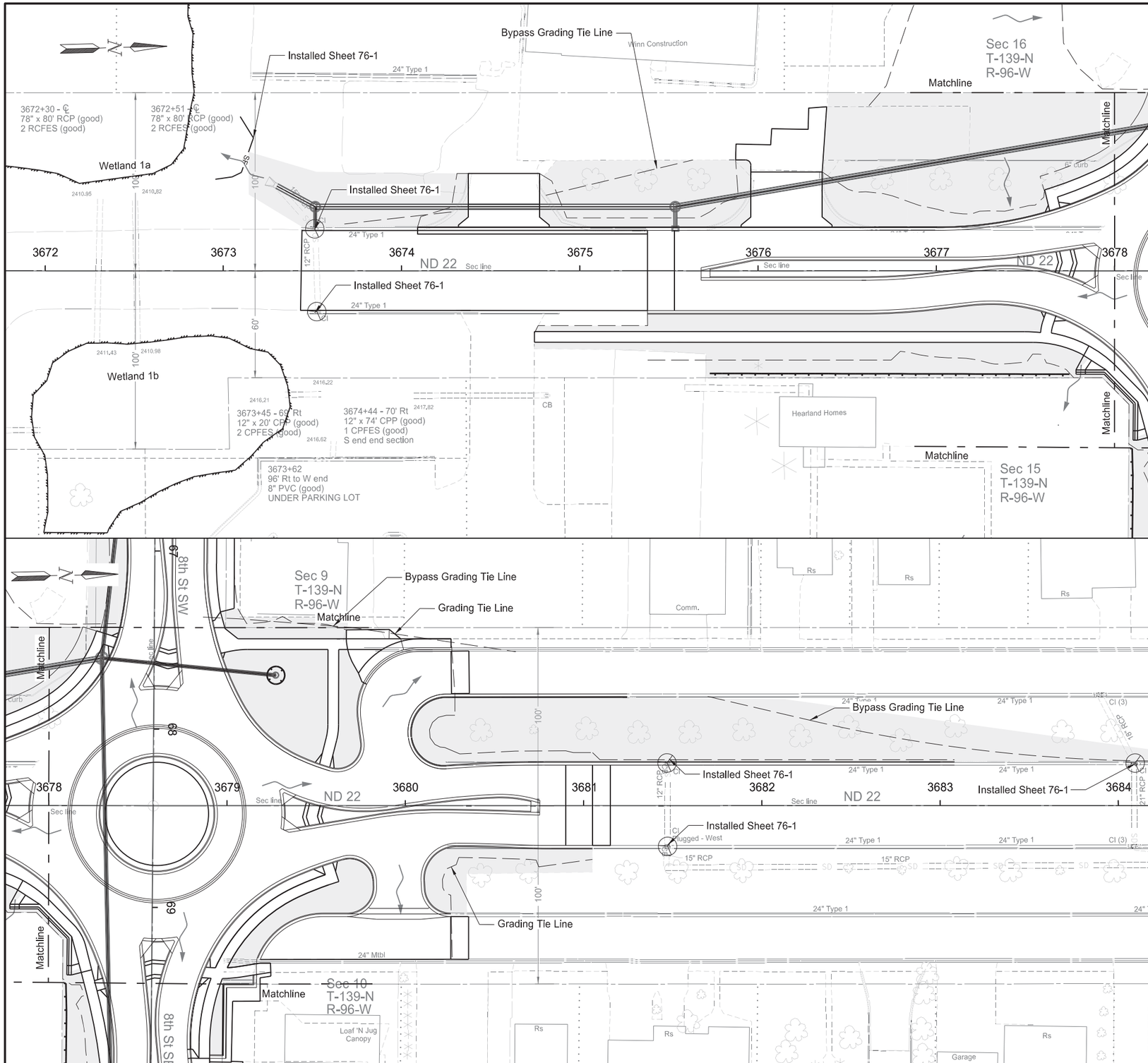

SPEC	CODE	BID ITEM	QTY	UNIT
HEN-5-022(144)069				
251	2000	TEMPORARY COVER CROP		
		Various Locations	0.91	ACRE
253	0201	HYDRAULIC MULCH		
		Various Locations	0.91	ACRE
260	0201	REMOVE SILT FENCE SUPPORTED		
		Sta 3672+83 to Sta 3672+93	75	LF
261	0112	FIBER ROLLS 12IN		
		Sta 3679+41	32	LF
		Sta 3675+73 to Sta 3678+00	200	LF
261	0113	REMOVE FIBER ROLLS 12IN		
		Sta 3679+41	32	LF
		Sta 3675+73 to Sta 3678+00	200	LF
708	1541	REMOVE INLET PROTECTION-SPECIAL		
		Various Locations	5	EA

Legend

- Fiber Rolls 12IN
- SF Silt Fence Supported
- Grading Tie Line (Fill)
- Grading Tie Line (Cut)
- Grading Tie Line (Transition)
- Exst Delineated Wetland - JD
- Flow Direction
- Hydraulic Mulch \ Temporary Crop Cover
- Inlet Protection - Special

Temporary Sediment and Erosion Control

ND 22 and 8th St S Intersection

Sta 3672+00 to Sta 3684+00

REGISTERED PROFESSIONAL ENGINEER
DAWN L.S. MICHEL
PE-8029
DATE 2025.12.18 08:59:35 -06'00'
NORTH DAKOTA

STATE	PROJECT NO.	SECTION NO.	SHEET NO.
ND	HEN-5-022(144)069	76	4

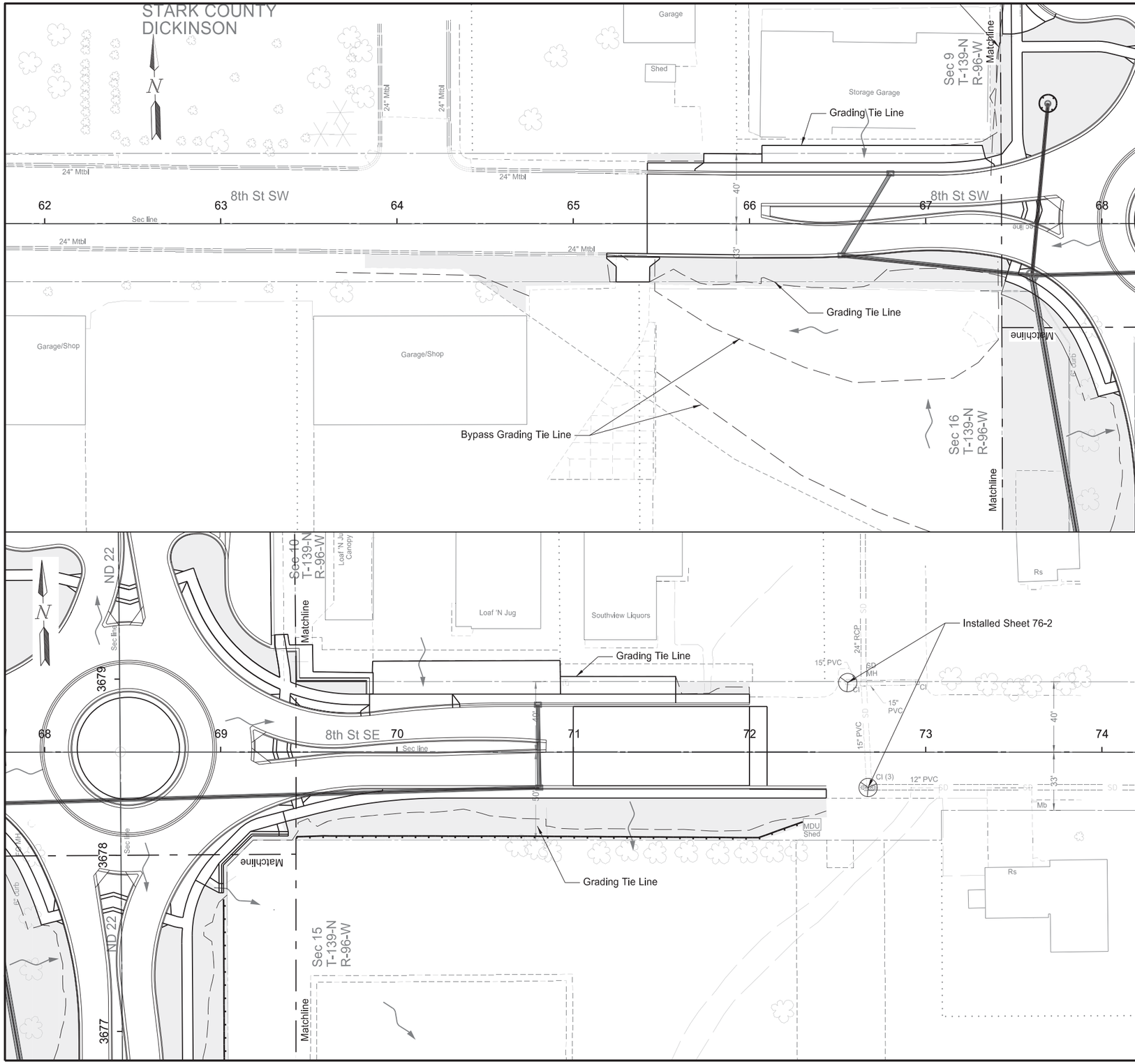

SPEC	CODE	BID ITEM	QTY	UNIT
HEN-5-022(144)069-Local				
251	2000	TEMPORARY COVER CROP		
		Various Locations	0.28	ACRE
253	0201	HYDRAULIC MULCH		
		Various Locations	0.28	ACRE
261	0112	FIBER ROLLS 12IN		
		Sta 69+43 to Sta 71+96	253	LF
261	0113	REMOVE FIBER ROLLS 12IN		
		Sta 69+43 to Sta 71+96	253	LF
708	1541	REMOVE INLET PROTECTION-SPECIAL		
		Various Locations	2	EA

Legend

- Fiber Rolls 12IN
- SF — Silt Fence Supported
- Grading Tie Line (Fill)
- Grading Tie Line (Cut)
- Grading Tie Line (Transition)
- Exst Delineated Wetland - JD
- Flow Direction
- Hydraulic Mulch \ Temporary Crop Cover
- Inlet Protection - Special

Temporary Sediment and Erosion Control

ND 22 and 8th St S Intersection

Sta 62+00 to Sta 74+00

REGISTERED PROFESSIONAL ENGINEER
DAWN L.S. MICHEL
PE-8029
DATE 2025.12.18 08:59:48 -06'00'
NORTH DAKOTA

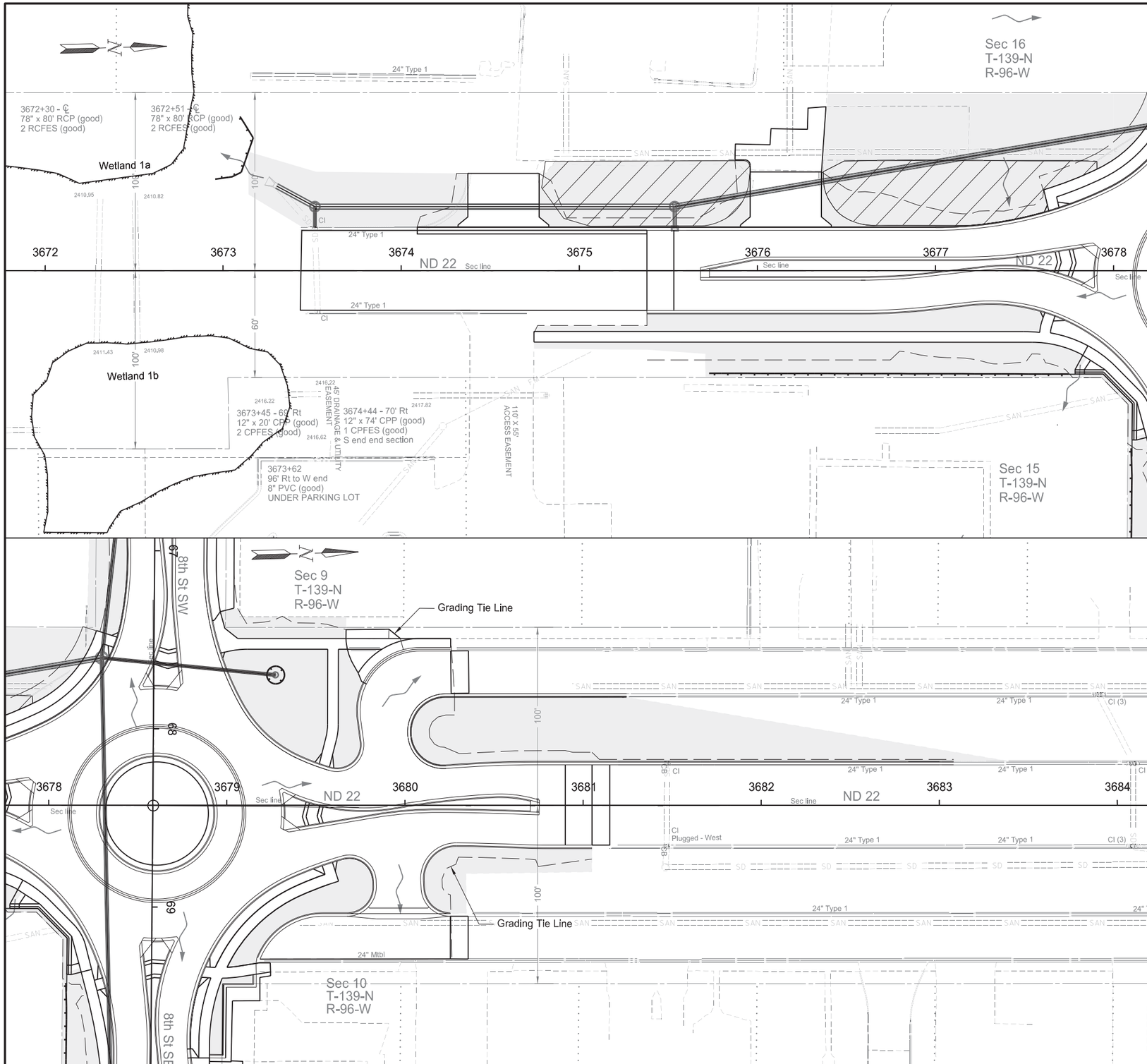

STATE	PROJECT NO.	SECTION NO.	SHEET NO.
ND	HEN-5-022(144)069	77	1

SPEC	CODE	BID ITEM	QTY	UNIT
HEN-5-022(144)069				
251	0200	SEEDING CLASS II		
		Various Locations	0.92	ACRE
253	0201	HYDRAULIC MULCH		
		Various Locations	0.92	ACRE
261	0112	FIBER ROLLS 12IN		
		Sta 3672+83 to Sta 3672+93 Lt	75	LF
		Sta 3675+73 to Sta 3677+96 Rt	200	LF
		Sta 3679+41 Lt	32	LF

Legend

- Fiber Rolls 12IN
- SF — Silt Fence Supported
- Grading Tie Line (Fill)
- Grading Tie Line (Cut)
- Grading Tie Line (Transition)
- Exst Delineated Wetland - JD
- Flow Direction
- Hydraulic Mulch
- Inlet Protection - Special
- Adjust Sprinkler System

Permanent Sediment and Erosion Control

ND 22 and 8th St

Sta 3671+77.5 to Sta 3684+22.5

REGISTERED PROFESSIONAL ENGINEER
DAWN L.S. MICHEL
PE-8029
DATE 2026.01.08 18:06:15 -06'00'
NORTH DAKOTA

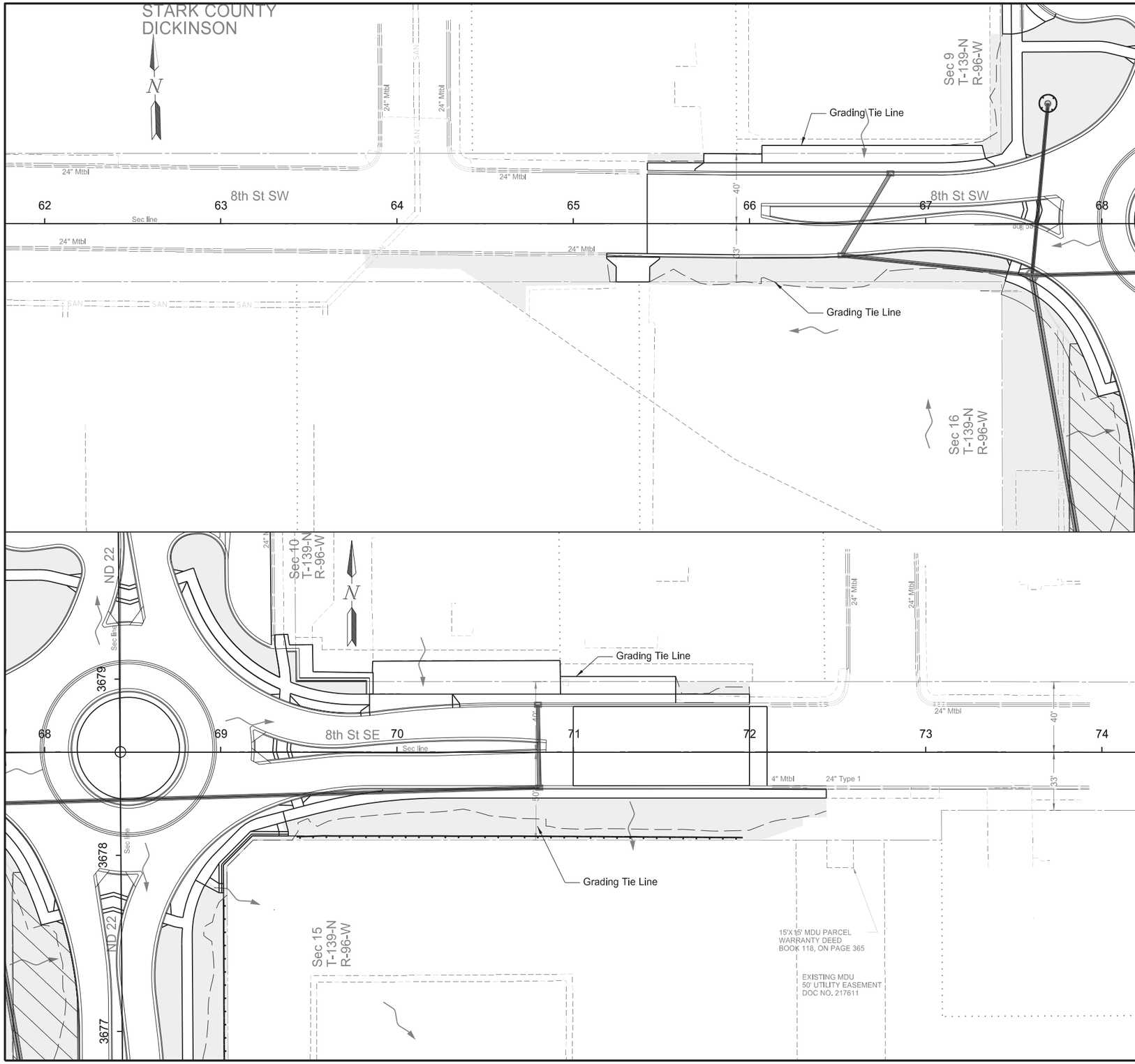

STATE	PROJECT NO.	SECTION NO.	SHEET NO.
ND	HEN-5-022(144)069	77	2

SPEC	CODE	BID ITEM	QTY	UNIT
HEN-5-022(144)069-Local				
251	0200	SEEDING CLASS II		
		Various Locations	0.28	ACRE
253	0201	HYDRAULIC MULCH		
		Various Locations	0.28	ACRE
261	0112	FIBER ROLLS 12IN		
		Sta 69+43 to Sta 71+96 Rt	253	LF

Legend

- Fiber Rolls 12IN
- SF Silt Fence Supported
- Grading Tie Line (Fill)
- Grading Tie Line (Cut)
- Grading Tie Line (Transition)
- Exst Delineated Wetland - JD
- Flow Direction
- Hydraulic Mulch
- Inlet Protection - Special
- Adjust Sprinkler System

Permanent Sediment and Erosion Control

ND 22 and 8th St

Sta 61+77.5 to Sta 74+67.5

REGISTERED PROFESSIONAL ENGINEER
DAWN L.S. MICHEL
PE-8029
DATE 2026.01.08 18:06:37 -06'00'
NORTH DAKOTA

PRELIMINARY SURVEY COORDINATE AND CURVE DATA - ND 22 & 8th St

STATE	PROJECT NO.	SECTION NO.	SHEET NO.
ND	HEN-5-022(144)069	81	1

HORIZONTAL ALIGNMENT

PNT	STATION	NORTHING	EASTING
Begin 8th St Align (SCL8)			
Beg	42+18.55	444,268.14	1,393,400.91
Station Equation ND 22 (SCL22) and 8th St (SCL8)			
8th St	68+43.06	444,193.72	1,396,024.36
ND 22	3678+58.66	444,193.72	1,396,024.36
End	94+96.00	444,109.49	1,398,675.96
Begin ND 22 Align (SCL22)			
Begin	3652+19.66	441,555.54	1,395,958.35
Station Equation 8th St (SCL8) and ND 22 (SCL22)			
ND 22	3678+58.66	444,193.72	1,396,024.36
8th St	68+43.06	444,193.72	1,396,024.36
End	3704+98.63	446,833.05	1,396,082.45

CURVE DATA

ARC DEFINITION

US PUBLIC LAND SURVEY DATA

CORNER	IRN	NORTHING	EASTING
T-139-N R-96-W			
N Qtr Cor Sec 16	6-E	444,268.14	1,393,400.91
E Qtr Cor Sec 9	7-D	446,833.05	1,396,082.45
SE Cor Sec 9	7-E	444,193.72	1,396,024.36
W Qtr Cor Sec 15	7-F	441,555.54	1,395,958.35
N Qtr Cor Sec 15	8-E	444,109.49	1,398,675.96

SURVEY CONTROL POINTS

PNT	NORTHING	EASTING	ELEV	STATION	OFFSET	ALIGNMENT	MONUMENT
GPS 3	442,472.31	1,395,902.99	2,434.09	3661+35	78' Lt	SCL22	Rebar w/ Alum cap stamped ND 22-8

All coordinates and measurements on this document derived from the International Foot definition.

INITIALIZING BENCH MARK
NDGPS Stations (OPUS)

- [x] NAVD-88
- [ ] _____
- [ ] GEOID12B
- [x] GEOID18
- [ ] _____

Date Survey Completed 04/26/23

- [ ] Assumed Coordinates
- [x] All coordinates on this sheet are Stark County ground coordinates. They are derived from the NAD83(2011) reference frame; North Dakota South Zone Combination Factor (cf) = 0.9998175

GREGG ORVIK
REGISTERED LAND SURVEYOR
LS. -3881
2025.12.15 08:27:57 -06'00'
NORTH DAKOTA

NOTES: Sheet 1 of 1

STATE	PROJECT NO.	SECTION NO.	SHEET NO.
ND	HEN-5-022(144)069	82	1

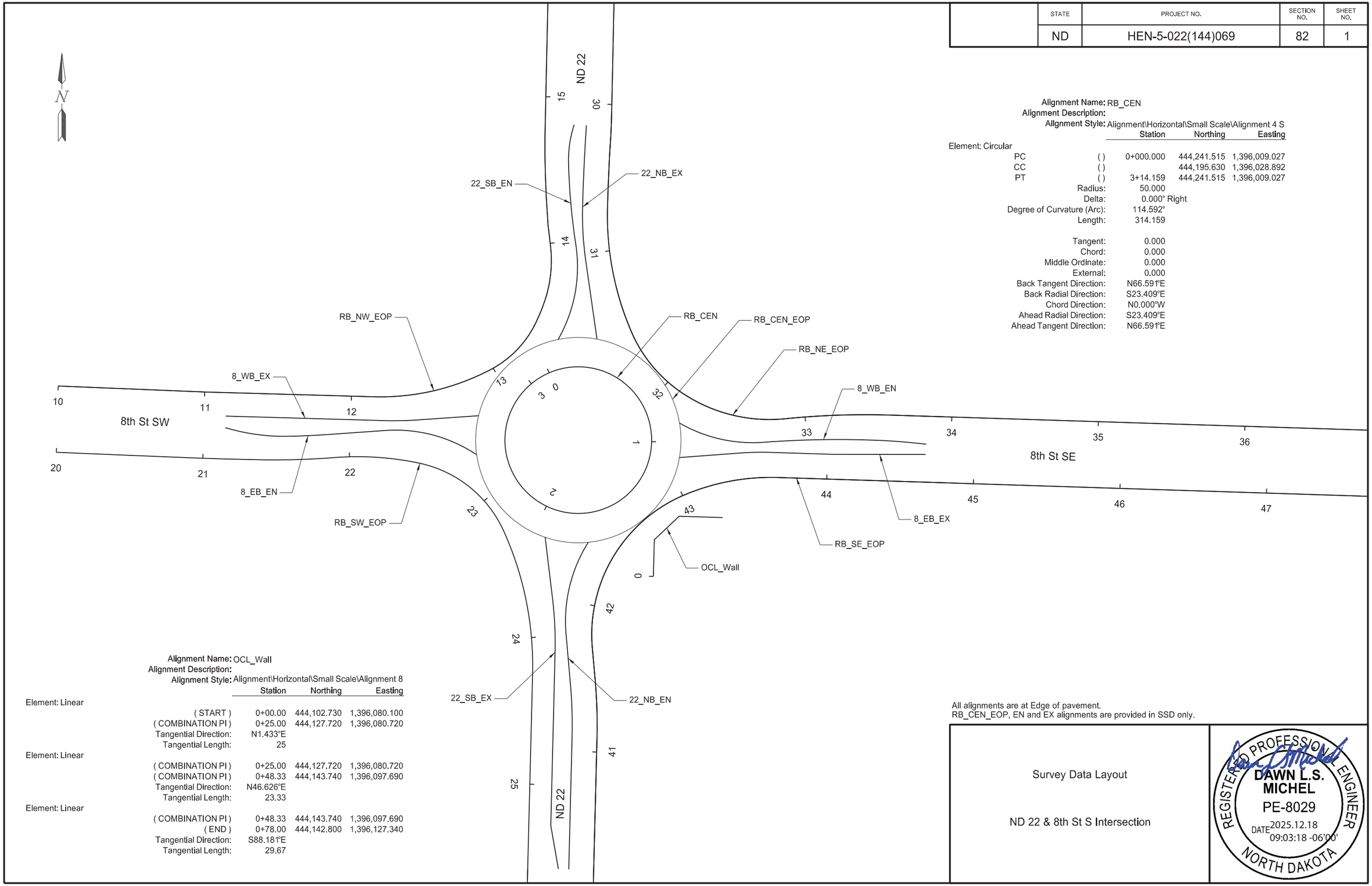

Alignment Name: RB_CEN
Alignment Description:
Alignment Style: Alignment\Horizontal\Small Scale\Alignment 4 S

		Station	Northing	Easting
Element: Circular				
PC	( )	0+000.000	444,241.515	1,396,009.027
CC	( )		444,195.630	1,396,028.892
PT	( )	3+14.159	444,241.515	1,396,009.027

Radius:	50.000
Delta:	0.000° Right
Degree of Curvature (Arc):	114.592°
Length:	314.159
Tangent:	0.000
Chord:	0.000
Middle Ordinate:	0.000
External:	0.000
Back Tangent Direction:	N66.591°E
Back Radial Direction:	S23.409°E
Chord Direction:	N0.000°W
Ahead Radial Direction:	S23.409°E
Ahead Tangent Direction:	N66.591°E

Alignment Name: OCL_Wall
Alignment Description:
Alignment Style: Alignment\Horizontal\Small Scale\Alignment 8

		Station	Northing	Easting
Element: Linear				
	(START)	0+00.00	444,102.730	1,396,080.100
	(COMBINATION PI)	0+25.00	444,127.720	1,396,080.720
	Tangential Direction:	N1.433°E		
	Tangential Length:	25		
Element: Linear				
	(COMBINATION PI)	0+25.00	444,127.720	1,396,080.720
	(COMBINATION PI)	0+48.33	444,143.740	1,396,097.690
	Tangential Direction:	N46.626°E		
	Tangential Length:	23.33		
Element: Linear				
	(COMBINATION PI)	0+48.33	444,143.740	1,396,097.690
	(END)	0+78.00	444,142.800	1,396,127.340
	Tangential Direction:	S88.181°E		
	Tangential Length:	29.67		

All alignments are at Edge of pavement.
RB_CEN_EOP, EN and EX alignments are provided in SSD only.

Survey Data Layout

ND 22 & 8th St S Intersection

REGISTERED PROFESSIONAL ENGINEER
DAWN L.S. MICHEL
PE-8029
DATE 2025.12.18 09:03:18 -06'00'
NORTH DAKOTA

STATE	PROJECT NO.	SECTION NO.	SHEET NO.
ND	HEN-5-022(144)069	82	2

Alignment Name: RB_NW
Alignment Description:
Alignment Style: Alignment\Horizontal\Small Scale\Alignment 4 S

		Station	Northing	Easting
Element: Linear				
START	( )	10+00.000 R1	444,232.560	1,395,674.271
COMBINATION PI	( )	11+00.000 R1	444,228.430	1,395,774.185
Tangential Direction:		S87.633°E		
Tangential Length:		100.000		
Element: Linear				
COMBINATION PI	( )	11+00.000 R1	444,228.430	1,395,774.185
PC	( )	12+15.126 R1	444,225.165	1,395,889.265
Tangential Direction:		S88.375°E		
Tangential Length:		115.126		
Element: Circular				
PC	( )	12+15.126 R1	444,225.165	1,395,889.265
COMBINATION PI	( )	12+57.458 R1	444,223.965	1,395,931.580
CC	( )		444,386.600	1,395,893.844
PCC	( )	12+97.928 R1	444,243.676	1,395,969.043
Radius:		161.500		
Delta:		29.376° Left		
Degree of Curvature (Arc):		35.477°		
Length:		82.802		
Tangent:		42.332		
Chord:		81.898		
Middle Ordinate:		5.278		
External:		5.456		
Back Tangent Direction:		S88.375°E		
Back Radial Direction:		S1.625°W		
Chord Direction:		N76.937°E		
Ahead Radial Direction:		S27.751°E		
Ahead Tangent Direction:		N62.249°E		
Element: Circular				
PCC	( )	12+97.928 R1	444,243.676	1,395,969.043
COMBINATION PI	( )	13+20.388 R1	444,254.134	1,395,988.920
CC	( )		444,306.510	1,395,935.984
PCC	( )	13+41.433 R1	444,274.121	1,395,999.166
Radius:		71.000		
Delta:		35.108° Left		
Degree of Curvature (Arc):		80.698°		
Length:		43.506		
Tangent:		22.460		
Chord:		42.828		
Middle Ordinate:		3.306		
External:		3.468		
Back Tangent Direction:		N62.249°E		
Back Radial Direction:		S27.751°E		
Chord Direction:		N44.695°E		
Ahead Radial Direction:		S62.859°E		
Ahead Tangent Direction:		N27.141°E		
Element: Circular				
PCC	( )	13+41.433 R1	444,274.121	1,395,999.166
COMBINATION PI	( )	13+51.942 R1	444,283.473	1,396,003.960
CC	( )		444,322.704	1,395,904.393
PCC	( )	13+62.383 R1	444,293.581	1,396,006.833
Radius:		106.500		
Delta:		11.271° Left		
Degree of Curvature (Arc):		53.799°		
Length:		20.950		
Tangent:		10.509		
Chord:		20.916		
Middle Ordinate:		0.515		
External:		0.517		
Back Tangent Direction:		N27.141°E		
Back Radial Direction:		S62.859°E		
Chord Direction:		N21.505°E		
Ahead Radial Direction:		S74.130°E		
Ahead Tangent Direction:		N15.870°E		
Element: Circular				
PCC	( )	13+62.383 R1	444,293.581	1,396,006.833
COMBINATION PI	( )	13+79.416 R1	444,309.840	1,396,011.911
CC	( )		444,318.120	1,395,928.257
PRC	( )	13+95.976 R1	444,326.779	1,396,010.119
Radius:		82.319		
Delta:		23.381° Left		
Degree of Curvature (Arc):		69.602°		
Length:		33.592		
Tangent:		17.033		
Chord:		33.360		
Middle Ordinate:		1.708		
External:		1.744		
Back Tangent Direction:		N17.343°E		
Back Radial Direction:		S72.657°E		
Chord Direction:		N5.652°E		
Ahead Radial Direction:		N83.962°E		
Ahead Tangent Direction:		N6.038°W		
Element: Circular				
PRC	( )	13+95.976 R1	444,326.779	1,396,010.119
COMBINATION PI	( )	14+12.216 R1	444,342.912	1,396,008.262
CC	( )		444,378.101	1,396,455.968
PCC	( )	14+28.441 R1	444,359.138	1,396,007.576
Radius:		448.793		
Delta:		4.145° Right		
Degree of Curvature (Arc):		12.767°		
Length:		32.466		
Tangent:		16.240		
Chord:		32.459		
Middle Ordinate:		0.294		
External:		0.294		
Back Tangent Direction:		N6.566°W		
Back Radial Direction:		N83.434°E		
Chord Direction:		N4.494°W		
Ahead Radial Direction:		N87.578°E		
Ahead Tangent Direction:		N2.422°W		
Element: Circular				
PCC	( )	14+28.441 R1	444,359.138	1,396,007.576
COMBINATION PI	( )	14+51.584 R1	444,382.204	1,396,005.701
CC	( )		444,395.471	1,396,454.602
PT	( )	14+74.685 R1	444,405.340	1,396,006.210
Radius:		448.500		
Delta:		5.908° Right		
Degree of Curvature (Arc):		12.775°		
Length:		46.243		
Tangent:		23.142		
Chord:		46.223		
Middle Ordinate:		0.596		
External:		0.597		
Back Tangent Direction:		N4.647°W		
Back Radial Direction:		N85.353°E		
Chord Direction:		N1.693°W		
Ahead Radial Direction:		S88.739°E		
Ahead Tangent Direction:		N1.261°E		
Element: Linear				
PT	( )	14+74.685 R1	444,405.340	1,396,006.210
END	( )	15+94.854 R1	444,525.480	1,396,008.882
Tangential Direction:		N1.274°E		
Tangential Length:		120.169		

Survey Data Layout

ND 22 & 8th St S Intersection

REGISTERED PROFESSIONAL ENGINEER
DAWN L.S. MICHEL
PE-8029
DATE 2025.12.18 09:03:34 -06'00'
NORTH DAKOTA

STATE	PROJECT NO.	SECTION NO.	SHEET NO.
ND	HEN-5-022(144)069	82	3

Alignment Name: RB_SW
Alignment Description:
Alignment Style: Alignment\Horizontal\Small Scale\Alignment 4 S

		Station	Northing	Easting
Element: Linear				
START	( )	20+00.000 R1	444,186.084	1,395,672.944
COMBINATION PI	( )	21+00.000 R1	444,183.248	1,395,772.904
Tangential Direction:		S88.375°E		
Tangential Length:		100.000		
Element: Linear				
COMBINATION PI	( )	21+00.000 R1	444,183.248	1,395,772.904
PC	( )	21+32.139 R1	444,182.337	1,395,805.030
Tangential Direction:		S88.375°E		
Tangential Length:		32.139		
Element: Circular				
PC	( )	21+32.139 R1	444,182.337	1,395,805.030
COMBINATION PI	( )	21+61.110 R1	444,181.515	1,395,833.989
CC	( )		444,730.616	1,395,820.583
PRC	( )	21+90.027 R1	444,183.749	1,395,862.874
Radius:		548.500		
Delta:		6.047° Left		
Degree of Curvature (Arc):		10.446°		
Length:		57.888		
Tangent:		28.971		
Chord:		57.861		
Middle Ordinate:		0.764		
External:		0.765		
Back Tangent Direction:		S88.375°E		
Back Radial Direction:		S1.625°W		
Chord Direction:		N88.601°E		
Ahead Radial Direction:		S4.422°E		
Ahead Tangent Direction:		N85.578°E		
Element: Circular				
PRC	( )	21+90.027 R1	444,183.749	1,395,862.874
COMBINATION PI	( )	22+19.449 R1	444,186.017	1,395,892.208
CC	( )		443,982.849	1,395,878.410
PCC	( )	22+48.457 R1	444,179.804	1,395,920.965
Radius:		201.500		
Delta:		16.614° Right		
Degree of Curvature (Arc):		28.435°		
Length:		58.430		
Tangent:		29.421		
Chord:		58.226		
Middle Ordinate:		2.114		
External:		2.137		
Back Tangent Direction:		N85.578°E		
Back Radial Direction:		S4.422°E		
Chord Direction:		S86.115°E		
Ahead Radial Direction:		S12.192°W		
Ahead Tangent Direction:		S77.808°E		
Element: Circular				
PCC	( )	22+48.457 R1	444,179.804	1,395,920.965
COMBINATION PI	( )	22+89.424 R1	444,171.152	1,395,961.008
CC	( )		444,100.142	1,395,903.753
PCC	( )	23+24.379 R1	444,133.854	1,395,977.954
Radius:		81.500		
Delta:		53.374° Right		
Degree of Curvature (Arc):		70.302°		
Length:		75.921		
Tangent:		40.967		
Chord:		73.206		
Middle Ordinate:		8.682		
External:		9.717		
Back Tangent Direction:		S77.808°E		
Back Radial Direction:		S12.192°W		
Chord Direction:		S51.121°E		
Ahead Radial Direction:		S65.566°W		
Ahead Tangent Direction:		S24.434°E		
Element: Circular				
PCC	( )	23+24.379 R1	444,133.854	1,395,977.954
COMBINATION PI	( )	23+75.245 R1	444,087.543	1,395,998.994
CC	( )		444,042.232	1,395,776.292
PT	( )	24+24.377 R1	444,036.693	1,395,997.722
Radius:		221.500		
Delta:		25.867° Right		
Degree of Curvature (Arc):		25.867°		
Length:		99.999		
Tangent:		50.866		
Chord:		99.152		
Middle Ordinate:		5.619		
External:		5.766		
Back Tangent Direction:		S24.434°E		
Back Radial Direction:		S65.566°W		
Chord Direction:		S11.500°E		
Ahead Radial Direction:		N88.567°W		
Ahead Tangent Direction:		S1.433°W		
Element: Linear				
PT	( )	24+24.377 R1	444,036.693	1,395,997.722
END	( )	27+26.761 R1	443,734.437	1,395,988.945
Tangential Direction:		S1.663°W		
Tangential Length:		302.383		

Survey Data Layout

ND 22 & 8th St S Intersection

REGISTERED PROFESSIONAL ENGINEER
DAWN L.S. MICHEL
PE-8029
DATE 2025.12.18 09:03:48 -06'00'
NORTH DAKOTA

STATE	PROJECT NO.	SECTION NO.	SHEET NO.
ND	HEN-5-022(144)069	82	4

Alignment Name: RAB_NE_EOP
Alignment Description:
Alignment Style: Alignment\Horizontal\Small Scale\Alignment 3 S

		Station	Northing	Easting
Element: Linear				
START	( )	29+00.000 R1	444,524.492	1,396,053.913
PC	( )	30+08.896 R1	444,415.622	1,396,051.546
Tangential Direction:		S1.246°W		
Tangential Length:		108.896		
Element: Circular				
PC	( )	30+08.896 R1	444,415.622	1,396,051.546
COMBINATION PI	( )	30+16.395 R1	444,408.124	1,396,051.383
CC	( )		444,423.198	1,395,703.128
PRC	( )	30+23.892 R1	444,400.640	1,396,050.897
Radius:		348.500		
Delta:		2.466° Right		
Degree of Curvature (Arc):		16.441°		
Length:		14.996		
Tangent:		7.499		
Chord:		14.995		
Middle Ordinate:		0.081		
External:		0.081		
Back Tangent Direction:		S1.246°W		
Back Radial Direction:		N88.754°W		
Chord Direction:		S2.478°W		
Ahead Radial Direction:		N86.289°W		
Ahead Tangent Direction:		S3.711°W		
Element: Circular				
PRC	( )	30+23.892 R1	444,400.687	1,396,050.900
COMBINATION PI	( )	30+47.208 R1	444,377.420	1,396,049.391
CC	( )		444,323.872	1,397,235.172
PCC	( )	30+70.517 R1	444,354.113	1,396,048.797
Radius:		1,186.760		
Delta:		2.251° Left		
Degree of Curvature (Arc):		4.828°		
Length:		46.625		
Tangent:		23.315		
Chord:		46.622		
Middle Ordinate:		0.229		
External:		0.229		
Back Tangent Direction:		S3.711°W		
Back Radial Direction:		N86.289°W		
Chord Direction:		S2.586°W		
Ahead Radial Direction:		N88.540°W		
Ahead Tangent Direction:		S1.460°W		
Element: Circular				
PCC	( )	30+70.517 R1	444,354.113	1,396,048.797
COMBINATION PI	( )	31+14.370 R1	444,310.274	1,396,047.679
CC	( )		444,348.978	1,396,250.232
PCC	( )	31+56.877 R1	444,269.935	1,396,064.882
Radius:		201.500		
Delta:		24.556° Left		
Degree of Curvature (Arc):		28.435°		
Length:		86.360		
Tangent:		43.853		
Chord:		85.701		
Middle Ordinate:		4.609		
External:		4.717		
Back Tangent Direction:		S1.460°W		
Back Radial Direction:		N88.540°W		
Chord Direction:		S10.818°E		
Ahead Radial Direction:		S66.904°W		
Ahead Tangent Direction:		S23.096°E		
Element: Circular				
PCC	( )	31+56.877 R1	444,269.935	1,396,064.882
COMBINATION PI	( )	31+86.375 R1	444,242.802	1,396,076.453
CC	( )		444,307.789	1,396,153.647
PCC	( )	32+14.131 R1	444,226.775	1,396,101.217
Radius:		96.500		
Delta:		33.994° Left		
Degree of Curvature (Arc):		59.374°		
Length:		57.254		
Tangent:		29.498		
Chord:		56.418		
Middle Ordinate:		4.215		
External:		4.408		
Back Tangent Direction:		S23.096°E		
Back Radial Direction:		S66.904°W		
Chord Direction:		S40.093°E		
Ahead Radial Direction:		S32.910°W		
Ahead Tangent Direction:		S57.090°E		
Element: Circular				
PCC	( )	32+14.131 R1	444,226.775	1,396,101.217
COMBINATION PI	( )	32+51.499 R1	444,206.472	1,396,132.588
CC	( )		444,316.185	1,396,159.080
PRC	( )	32+86.009 R1	444,210.222	1,396,169.768
Radius:		106.500		
Delta:		38.669° Left		
Degree of Curvature (Arc):		53.799°		
Length:		71.877		
Tangent:		37.368		
Chord:		70.521		
Middle Ordinate:		6.006		
External:		6.365		
Back Tangent Direction:		S57.090°E		
Back Radial Direction:		S32.910°W		
Chord Direction:		S76.425°E		
Ahead Radial Direction:		S5.759°E		
Ahead Tangent Direction:		N84.241°E		
Element: Circular				
PRC	( )	32+86.009 R1	444,210.217	1,396,169.713
COMBINATION PI	( )	33+22.288 R1	444,213.857	1,396,205.810
CC	( )		443,664.485	1,396,224.755
PT	( )	33+58.462 R1	444,212.712	1,396,242.071
Radius:		548.500		
Delta:		7.568° Right		
Degree of Curvature (Arc):		10.446°		
Length:		72.453		
Tangent:		36.279		
Chord:		72.401		
Middle Ordinate:		1.196		
External:		1.199		
Back Tangent Direction:		N84.241°E		
Back Radial Direction:		S5.759°E		
Chord Direction:		N88.025°E		
Ahead Radial Direction:		S1.809°W		
Ahead Tangent Direction:		S88.191°E		
Element: Linear				
PT	( )	33+58.462 R1	444,212.712	1,396,242.071
END	( )	36+91.491 R1	444,202.198	1,396,574.934
Tangential Direction:		S88.191°E		
Tangential Length:		333.029		

Survey Data Layout

ND 22 & 8th St S Intersection

REGISTERED PROFESSIONAL ENGINEER
DAWN L.S. MICHEL
PE-8029
DATE 2025.12.18 09:04:00 -06'00'
NORTH DAKOTA

STATE	PROJECT NO.	SECTION NO.	SHEET NO.
ND	HEN-5-022(144)069	82	5

Alignment Name: RB_SE
Alignment Description:
Alignment Style: Alignment\Horizontal\Small Scale\Alignment 4 S

		Station	Northing	Easting
Element: Linear				
START	( )	38+50.000 R1	443,733.097	1,396,035.073
PC	( )	41+09.622 R1	443,992.636	1,396,041.634
Tangential Direction:		N1.448°E		
Tangential Length:		259.622		
Element: Circular				
PC	( )	41+09.622 R1	443,992.636	1,396,041.634
COMBINATION PI	( )	41+29.504 R1	444,012.512	1,396,042.131
CC	( )		444,001.352	1,395,693.243
PT	( )	41+49.343 R1	444,032.315	1,396,040.365
Radius:		348.500		
Delta:		6.530° Left		
Degree of Curvature (Arc):		16.441°		
Length:		39.721		
Tangent:		19.882		
Chord:		39.700		
Middle Ordinate:		0.566		
External:		0.567		
Back Tangent Direction:		N1.433°E		
Back Radial Direction:		S88.567°E		
Chord Direction:		N1.832°W		
Ahead Radial Direction:		N84.903°E		
Ahead Tangent Direction:		N5.097°W		
Element: Linear				
PT	( )	41+49.343 R1	444,032.315	1,396,040.365
PC	( )	41+70.913 R1	444,053.800	1,396,038.448
Tangential Direction:		N5.097°W		
Tangential Length:		21.570		
Element: Circular				
PC	( )	41+70.913 R1	444,053.800	1,396,038.448
COMBINATION PI	( )	42+46.617 R1	444,129.204	1,396,031.722
CC	( )		444,062.996	1,396,141.539
PCC	( )	43+01.636 R1	444,158.457	1,396,101.545
Radius:		103.500		
Delta:		72.366° Right		
Degree of Curvature (Arc):		55.358°		
Length:		130.723		
Tangent:		75.703		
Chord:		122.205		
Middle Ordinate:		19.961		
External:		24.731		
Back Tangent Direction:		N5.097°W		
Back Radial Direction:		N84.903°E		
Chord Direction:		N31.086°E		
Ahead Radial Direction:		S22.732°E		
Ahead Tangent Direction:		N67.268°E		
Element: Circular				
PCC	( )	43+01.636 R1	444,158.457	1,396,101.545
COMBINATION PI	( )	43+34.601 R1	444,171.195	1,396,131.949
CC	( )		444,018.724	1,396,160.087
PT	( )	43+66.553 R1	444,170.148	1,396,164.897
Radius:		151.500		
Delta:		24.551° Right		
Degree of Curvature (Arc):		37.819°		
Length:		64.917		
Tangent:		32.964		
Chord:		64.421		
Middle Ordinate:		3.464		
External:		3.545		
Back Tangent Direction:		N67.268°E		
Back Radial Direction:		S22.732°E		
Chord Direction:		N79.544°E		
Ahead Radial Direction:		S1.819°W		
Ahead Tangent Direction:		S88.181°E		
Element: Linear				
PT	( )	43+66.553 R1	444,170.148	1,396,164.897
COMBINATION PI	( )	44+82.278 R1	444,166.474	1,396,280.564
Tangential Direction:		S88.181°E		
Tangential Length:		115.725		
Element: Linear				
COMBINATION PI	( )	44+82.278 R1	444,166.474	1,396,280.564
END	( )	47+75.173 R1	444,157.168	1,396,573.310
Tangential Direction:		S88.179°E		
Tangential Length:		292.895		

Survey Data Layout

ND 22 & 8th St S Intersection

REGISTERED PROFESSIONAL ENGINEER
DAWN L.S. MICHEL
PE-8029
DATE 2025.12.18 09:04:13 -06'00'
NORTH DAKOTA

STATE	PROJECT NO.	SECTION NO.	SHEET NO.
ND	HEN-5-022(144)069	82	6

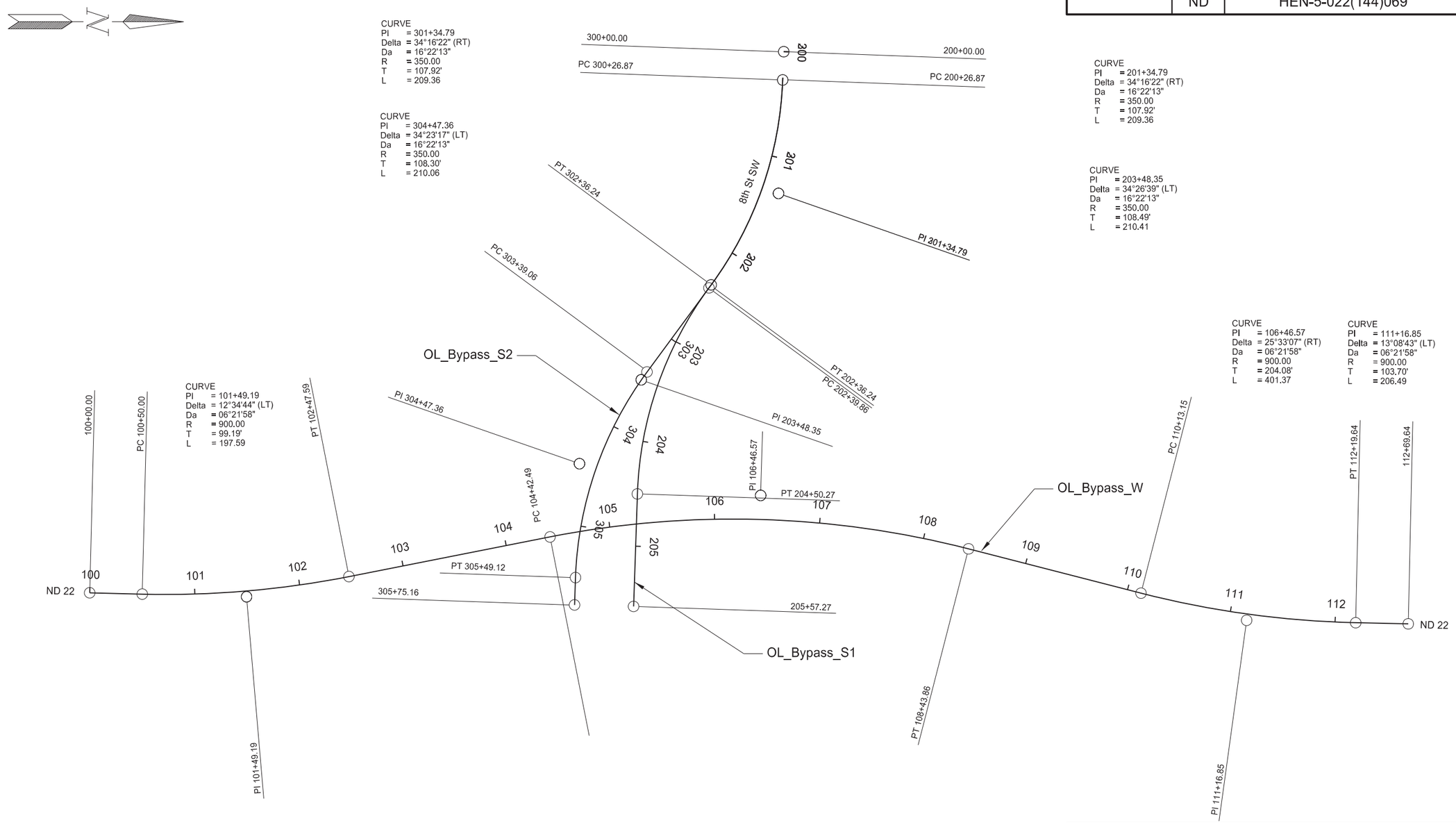

Survey Data Layout

ND 22 and 8th St S Intersection

REGISTERED PROFESSIONAL ENGINEER
JASON P GULLICKS
PE-4792
DATE 2025.12.17
17:30:20 -06'00'
NORTH DAKOTA

Alignment Name: OL_Bypass_W
Alignment Description:
Alignment Style: Alignment\Horizontal\Small Scale\Alignment 1 S

		Station	Northing	Easting
Element: Linear				
START	( )	0+00	443,557.17	1,396,008.43
PC	( )	0+50	443,607.16	1,396,009.68
Tangential Direction:		N1.433°E		
Tangential Length:		50.00		
Element: Circular				
PC	( )	0+50	443,607.16	1,396,009.68
COMBINATION PI	( )	1+49.194	443,706.32	1,396,012.16
CC	( )		443,629.67	1,395,109.96
PT	( )	2+47.59	443,803.64	1,395,992.99
Radius:		900.00		
Delta:		12.579° Left		
Degree of Curvature (Arc):		6.366°		
Length:		197.59		
Tangent:		99.19		
Chord:		197.19		
Middle Ordinate:		5.42		
External:		5.45		
Back Tangent Direction:		N1.433°E		
Back Radial Direction:		S88.567°E		
Chord Direction:		N4.856°W		
Ahead Radial Direction:		N78.854°E		
Ahead Tangent Direction:		N11.146°W		
Element: Linear				
PT	( )	2+47.59	443,803.64	1,395,992.99
PC	( )	4+42.486	443,994.86	1,395,955.31
Tangential Direction:		N11.146°W		
Tangential Length:		194.90		
Element: Circular				
PC	( )	4+42.486	443,994.86	1,395,955.31
COMBINATION PI	( )	6+46.565	444,195.09	1,395,915.87
CC	( )		444,168.84	1,396,838.34
PT	( )	8+43.857	444,392.76	1,395,966.64
Radius:		900.00		
Delta:		25.552° Right		
Degree of Curvature (Arc):		6.366°		
Length:		401.37		
Tangent:		204.08		
Chord:		398.05		
Middle Ordinate:		22.28		
External:		22.85		
Back Tangent Direction:		N11.146°W		
Back Radial Direction:		N78.854°E		
Chord Direction:		N1.630°E		
Ahead Radial Direction:		S75.594°E		
Ahead Tangent Direction:		N14.406°E		
Element: Linear				
PT	( )	8+43.857	444,392.76	1,395,966.64
PC	( )	10+13.153	444,556.73	1,396,008.76
Tangential Direction:		N14.406°E		
Tangential Length:		169.30		
Element: Circular				
PC	( )	10+13.153	444,556.73	1,396,008.76
COMBINATION PI	( )	11+16.852	444,657.17	1,396,034.56
CC	( )		444,780.64	1,395,137.06
PT	( )	12+19.64	444,760.84	1,396,036.84
Radius:		900.00		
Delta:		13.145° Left		
Degree of Curvature (Arc):		6.366°		
Length:		206.49		
Tangent:		103.70		
Chord:		206.03		
Middle Ordinate:		5.92		
External:		5.95		
Back Tangent Direction:		N14.406°E		
Back Radial Direction:		S75.594°E		
Chord Direction:		N7.834°E		
Ahead Radial Direction:		S88.739°E		
Ahead Tangent Direction:		N1.261°E		
Element: Linear				
PT	( )	12+19.64	444,760.84	1,396,036.84
END	( )	12+69.64	444,810.83	1,396,037.94
Tangential Direction:		N1.261°E		
Tangential Length:		50.00		

Survey Data Layout

ND 22 and 8th St S Intersection

REGISTERED PROFESSIONAL ENGINEER
JASON P GULLICKS
PE-4792
DATE 2025.12.17 17:30:36 -06'00'
NORTH DAKOTA

STATE	PROJECT NO.	SECTION NO.	SHEET NO.
ND	HEN-5-022(144)069	82	8

Alignment Name: OL_Bypass_S_1
Alignment Description:
Alignment Style: Alignment\Horizontal\Small Scale\Alignment 2

		Station	Northing	Easting
Element: Linear				
START	(START)	200+00.00 R1	444,217.04	1,395,494.16
PC	(PC)	200+26.87 R1	444,216.05	1,395,521.01
	Tangential Direction:	S87.890°E		
	Tangential Length:	26.87		
Element: Circular				
PC	(PC)	200+26.87 R1	444,216.05	1,395,521.01
COMBINATION	(COMBINATION PI)	201+34.79 R1	444,212.08	1,395,628.86
CC	(CC)		443,866.29	1,395,508.13
PT	(PT)	202+36.24 R1	444,148.07	1,395,715.74
	Radius:	350.00		
	Delta:	34.27 Right		
	Degree of Curvature (Arc):	16.37		
	Length:	209.36		
	Tangent:	107.92		
	Chord:	206.25		
	Middle Ordinate:	15.54		
	External:	16.26		
	Back Tangent Direction:	S87.890°E		
	Back Radial Direction:	S2.110°W		
	Chord Direction:	S70.754°E		
	Ahead Radial Direction:	S36.383°W		
	Ahead Tangent Direction:	S53.617°E		
Element: Linear				
PT	(PT)	202+36.24 R1	444,148.07	1,395,715.74
PC	(PC)	202+39.86 R1	444,145.91	1,395,718.66
	Tangential Direction:	S53.617°E		
	Tangential Length:	3.63		
Element: Circular				
PC	(PC)	202+39.86 R1	444,145.91	1,395,718.66
COMBINATION	(COMBINATION PI)	203+48.35 R1	444,081.56	1,395,806.00
CC	(CC)		444,427.69	1,395,926.27
PT	(PT)	204+50.27 R1	444,077.89	1,395,914.43
	Radius:	350.00		
	Delta:	34.44 Left		
	Degree of Curvature (Arc):	16.37		
	Length:	210.41		
	Tangent:	108.49		
	Chord:	207.25		
	Middle Ordinate:	15.69		
	External:	16.43		
	Back Tangent Direction:	S53.617°E		
	Back Radial Direction:	S36.383°W		
	Chord Direction:	S70.839°E		
	Ahead Radial Direction:	S1.939°W		
	Ahead Tangent Direction:	S88.061°E		
Element: Linear				
PT	(PT)	204+50.27 R1	444,077.89	1,395,914.43
END	(END)	205+57.27 R1	444,074.27	1,396,021.37
	Tangential Direction:	S88.061°E		
	Tangential Length:	107.00		

Alignment Name: OL_Bypass_S_2
Alignment Description:
Alignment Style: Alignment\Horizontal\Small Scale\Alignment 3

		Station	Northing	Easting
Element: Linear				
START	(START)	300+00.00 R1	444,217.04	1,395,494.16
PC	(PC)	300+26.87 R1	444,216.05	1,395,521.01
	Tangential Direction:	S87.890°E		
	Tangential Length:	26.87		
Element: Circular				
PC	(PC)	300+26.87 R1	444,216.05	1,395,521.01
COMBINATION	(COMBINATION PI)	301+34.79 R1	444,212.08	1,395,628.86
CC	(CC)		443,866.29	1,395,508.13
PT	(PT)	302+36.24 R1	444,148.07	1,395,715.74
	Radius:	350.00		
	Delta:	34.27 Right		
	Degree of Curvature (Arc):	16.37		
	Length:	209.36		
	Tangent:	107.92		
	Chord:	206.25		
	Middle Ordinate:	15.54		
	External:	16.26		
	Back Tangent Direction:	S87.890°E		
	Back Radial Direction:	S2.110°W		
	Chord Direction:	S70.754°E		
	Ahead Radial Direction:	S36.383°W		
	Ahead Tangent Direction:	S53.617°E		
Element: Linear				
PT	(PT)	302+36.24 R1	444,148.07	1,395,715.74
PC	(PC)	303+39.06 R1	444,087.07	1,395,798.52
	Tangential Direction:	S53.617°E		
	Tangential Length:	102.82		
Element: Circular				
PC	(PC)	303+39.06 R1	444,087.07	1,395,798.52
COMBINATION	(COMBINATION PI)	304+47.36 R1	444,022.83	1,395,885.71
CC	(CC)		444,368.85	1,396,006.13
PT	(PT)	305+49.12 R1	444,019.06	1,395,993.95
	Radius:	350.00		
	Delta:	34.39 Left		
	Degree of Curvature (Arc):	16.37		
	Length:	210.06		
	Tangent:	108.30		
	Chord:	206.93		
	Middle Ordinate:	15.64		
	External:	16.37		
	Back Tangent Direction:	S53.617°E		
	Back Radial Direction:	S36.383°W		
	Chord Direction:	S70.811°E		
	Ahead Radial Direction:	S1.995°W		
	Ahead Tangent Direction:	S88.005°E		
Element: Linear				
PT	(PT)	305+49.12 R1	444,019.06	1,395,993.95
END	(END)	305+75.16 R1	444,018.15	1,396,019.97
	Tangential Direction:	S88.005°E		
	Tangential Length:	26.03		

Survey Data Layout

ND 22 and 8th St S Intersection

REGISTERED PROFESSIONAL ENGINEER
JASON P GULLICKS
PE-4792
DATE 2025.12.17 17:30:53 -06'00'
NORTH DAKOTA

STATE	PROJECT NO.	SECTION NO.	SHEET NO.
ND	HEN-5-022(144)069	82	9

SPEC	CODE	BID ITEM	QTY	UNIT
HEN-5-022(144)069				
720	0110	RIGHT OF WAY MARKERS		
		3678+26.00 - 100' Lt	1	EA
		3677+93.26 - 60' Rt	1	EA
		3678+08.16 - 75' Rt	1	EA
		3678+97.69 - 100' Rt	1	EA
		3678+99.30 - 100' Lt	1	EA
		3678+22.52 - 466' Rt	1	EA
		3678+05.52 - 466' Rt	1	EA
		3673+02.62 - 60' Rt	1	EA
		3673+03.47 - 100' Rt	1	EA
720	0125	RIGHT OF WAY MARKERS		
		3678+75.34 - 2624' Lt	1	EA
		3678+40.78 - 2653' Rt	1	EA
		3652+19.66 - 0' Rt	1	EA
		3678+58.66 - 0' Rt	1	EA
		3704+98.63 - 0' Rt	1	EA
720	0130	RIGHT OF WAY MARKERS		
		3678+26.00 - 100' Lt	1	EA
		3673+02.62 - 60' Rt	1	EA
		3677+93.26 - 60' Rt	1	EA
		3678+08.16 - 75' Rt	1	EA
		3678+97.69 - 100' Rt	1	EA
		3678+99.30 - 100' Lt	1	EA
		3678+22.52 - 466' Rt	1	EA
		3678+05.52 - 466' Rt	1	EA
		3673+03.47 - 100' Rt		
720	0135	IRON PIN REFERENCE MONUMENTS		
		3679+15.34 - 2624' Lt	1	EA
		3652+19.66 - 100' Lt	1	EA
		3652+19.66 - 100' Rt	1	EA
		3678+72.80 - 2653' Rt	1	EA
		3678+07.78 - 2653' Rt	1	EA
		3704+98.63 - 100' Rt	1	EA
		3704+98.63 - 100' Lt	1	EA

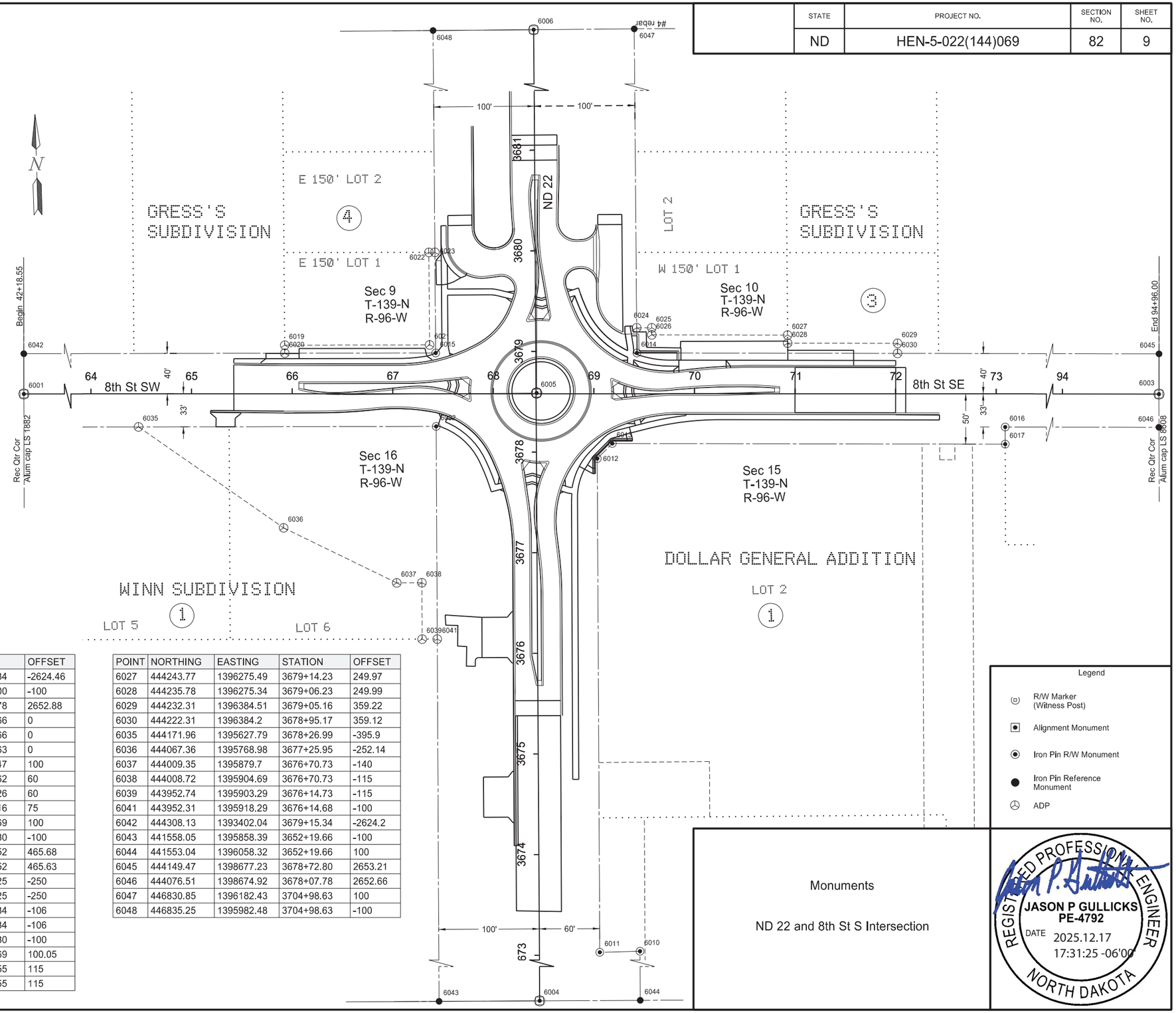

POINT	NORTHING	EASTING	STATION	OFFSET
6001	444268.14	1393400.91	3678+75.34	-2624.46
6002	444163.57	1395923.57	3678+26.00	-100
6003	444109.49	1398675.96	3678+40.78	2652.88
6004	441555.54	1395958.35	3652+19.66	0
6005	444193.72	1396024.36	3678+58.66	0
6006	446833.05	1396082.45	3704+98.63	0
6010	443636.2	1396110.44	3673+03.47	100
6011	443636.35	1396070.43	3673+02.62	60
6012	444126.84	1396082.7	3677+93.26	60
6013	444141.36	1396098.07	3678+08.16	75
6014	444230.54	1396125.19	3678+97.69	100
6015	444236.55	1395925.28	3678+99.30	-100
6016	444145.95	1396488.99	3678+22.52	465.68
6017	444128.95	1396488.52	3678+05.52	465.63
6019	444248.8	1395775.51	3679+08.25	-250
6020	444240.8	1395775.33	3679+00.25	-250
6021	444244.72	1395919.46	3679+07.34	-106
6022	444336.7	1395921.48	3679+99.34	-106
6023	444336.53	1395927.48	3679+99.30	-100
6024	444255.53	1396125.79	3679+22.69	100.05
6025	444255.06	1396140.74	3679+22.55	115
6026	444248.06	1396140.58	3679+15.55	115

POINT	NORTHING	EASTING	STATION	OFFSET
6027	444243.77	1396275.49	3679+14.23	249.97
6028	444235.78	1396275.34	3679+06.23	249.99
6029	444232.31	1396384.51	3679+05.16	359.22
6030	444222.31	1396384.2	3678+95.17	359.12
6035	444171.96	1395627.79	3678+26.99	-395.9
6036	444067.36	1395768.98	3677+25.95	-252.14
6037	444009.35	1395879.7	3676+70.73	-140
6038	444008.72	1395904.69	3676+70.73	-115
6039	443952.74	1395903.29	3676+14.73	-115
6041	443952.31	1395918.29	3676+14.68	-100
6042	444308.13	1393402.04	3679+15.34	-2624.2
6043	441558.05	1395858.39	3652+19.66	-100
6044	441553.04	1396058.32	3652+19.66	100
6045	444149.47	1398677.23	3678+72.80	2653.21
6046	444076.51	1398674.92	3678+07.78	2652.66
6047	446830.85	1396182.43	3704+98.63	100
6048	446835.25	1395982.48	3704+98.63	-100

Legend

- R/W Marker (Witness Post)
- Alignment Monument
- Iron Pin R/W Monument
- Iron Pin Reference Monument
- ADP

Monuments

ND 22 and 8th St S Intersection

REGISTERED PROFESSIONAL ENGINEER
JASON P GULLICKS
PE-4792
DATE 2025.12.17 17:31:25 -06'00'
NORTH DAKOTA

STATE	PROJECT NO.	SECTION NO.	SHEET NO.
ND	HEN-5-022(144)069	82	10

Stations and offsets based on SCL22 alignment

Point	Northing	Easting	Station	Offset	Description
ADP6	444133.03	1395976.13	3677+96.78	-46.69	BOC
ADP8	443744.86	1395988.44	3674+09.05	-24.68	BOC
ADP9	443813.94	1395960.15	3674+77.39	-54.69	BOC
ADP11	443679.96	1395988.84	3673+44.17	-22.66	ASP
ADP43	443972.52	1395963.30	3676+36.00	-55.51	CONC
ADP44	443971.89	1395988.60	3676+36.00	-30.20	CONC
ADP45	443977.27	1395993.24	3676+41.50	-25.70	CONC
ADP46	443977.25	1395994.23	3676+41.50	-24.70	BOC
ADP47	443932.63	1395958.60	3675+96.00	-59.20	CONC
ADP48	443931.90	1395987.60	3675+96.00	-30.20	CONC
ADP49	443926.29	1395991.96	3675+90.50	-25.70	CONC
ADP50	443926.26	1395992.96	3675+90.50	-24.70	BOC
ADP69	443982.85	1395878.41	3676+44.20	-140.63	CEN RAD
ADP70	444100.14	1395903.75	3677+62.10	-118.23	CEN RAD
ADP108	444164.07	1395925.41	3678+26.55	-98.17	CONC
ADP109	444097.00	1395976.43	3677+60.78	-45.49	CONC
ADP110	444128.06	1395965.21	3677+91.55	-57.49	CONC
ADP111	444098.85	1395984.98	3677+62.84	-36.99	CONC
ADP112	444097.00	1395988.85	3677+61.08	-33.08	BOC
ADP113	444104.69	1395983.59	3677+68.64	-38.53	CONC
ADP114	444111.29	1395984.64	3677+75.27	-37.64	BOC
ADP115	444130.55	1395970.67	3677+94.16	-52.09	CONC
ADP116	444170.66	1395934.06	3678+33.35	-89.69	CONC
ADP117	444170.80	1395940.19	3678+33.64	-83.57	BOC

Point	Northing	Easting	Station	Offset	Description
ADP118	444172.57	1395928.37	3678+35.12	-95.43	CONC
ADP119	444176.22	1395926.84	3678+38.72	-97.05	BOC
ADP120	444167.58	1395932.99	3678+30.24	-90.69	CONC
ADP157	444173.26	1395934.97	3678+35.97	-88.85	BOC
ADP158	444175.41	1395929.36	3678+37.98	-94.51	BOC
ADP159	443873.72	1395993.65	3675+38.00	-22.70	CONC
ADP300	443767.74	1395989.01	3674+31.93	-24.69	CONC
ADP301	443767.74	1395988.01	3674+31.90	-25.69	BOC
ADP302	443773.35	1395983.64	3674+37.40	-30.19	CONC
ADP303	443773.95	1395959.16	3674+37.39	-54.68	CONC
ADP304	443813.33	1395984.64	3674+77.40	-30.19	CONC
ADP305	443818.72	1395989.28	3674+82.90	-25.69	CONC
ADP306	443818.69	1395990.27	3674+82.90	-24.69	BOC
ADP307	443924.12	1395955.38	3675+87.42	-62.21	CONC
ADP308	443924.58	1395946.47	3675+87.66	-71.13	CONC
ADP309	443944.01	1395947.37	3676+07.11	-70.72	CONC
ADP310	443944.80	1395938.35	3676+07.66	-79.75	CONC
ADP311	443965.19	1395939.18	3676+28.07	-79.44	CONC
ADP312	443965.87	1395927.29	3676+28.45	-91.34	CONC
ADP313	443975.94	1395926.83	3676+38.51	-92.05	CONC
ADP412	443887.72	1395994.02	3675+53.00	-22.70	CONC
ADP521	444099.54	1395988.17	3677+63.60	-33.82	BOC
ADP522	443887.72	1395994.02	3675+53.00	-22.70	BOC

Point	Northing	Easting	Station	Offset	Description
ADP412	444117.22	1396080.46	3677+83.59	58.00	
ADP415	444127.72	1396080.72	3677+94.09	58.00	
ADP416	444143.74	1396097.69	3678+10.53	75.00	
ADP417	444143.26	1396112.84	3678+10.43	90.00	
ADP419	444143.09	1396118.09	3678+10.40	95.00	
ADP528	444145.76	1396112.92	3678+12.93	90.00	FF Wall
ADP 529	444144.76	1396097.30	3678+11.54	74.00	FF Wall
ADP 530	444128.16	1396079.74	3677+94.51	57.00	FF Wall
ADP 531	444117.28	1396077.96	3677+83.59	56.00	CON
ADP 532	444112.04	1396077.83	3677+78.34	56.00	CON
ADP534	444117.25	1396079.46	3677+83.59	57.00	FF Wall
ADP535	444112.00	1396079.33	3677+78.34	57.00	FF Wall

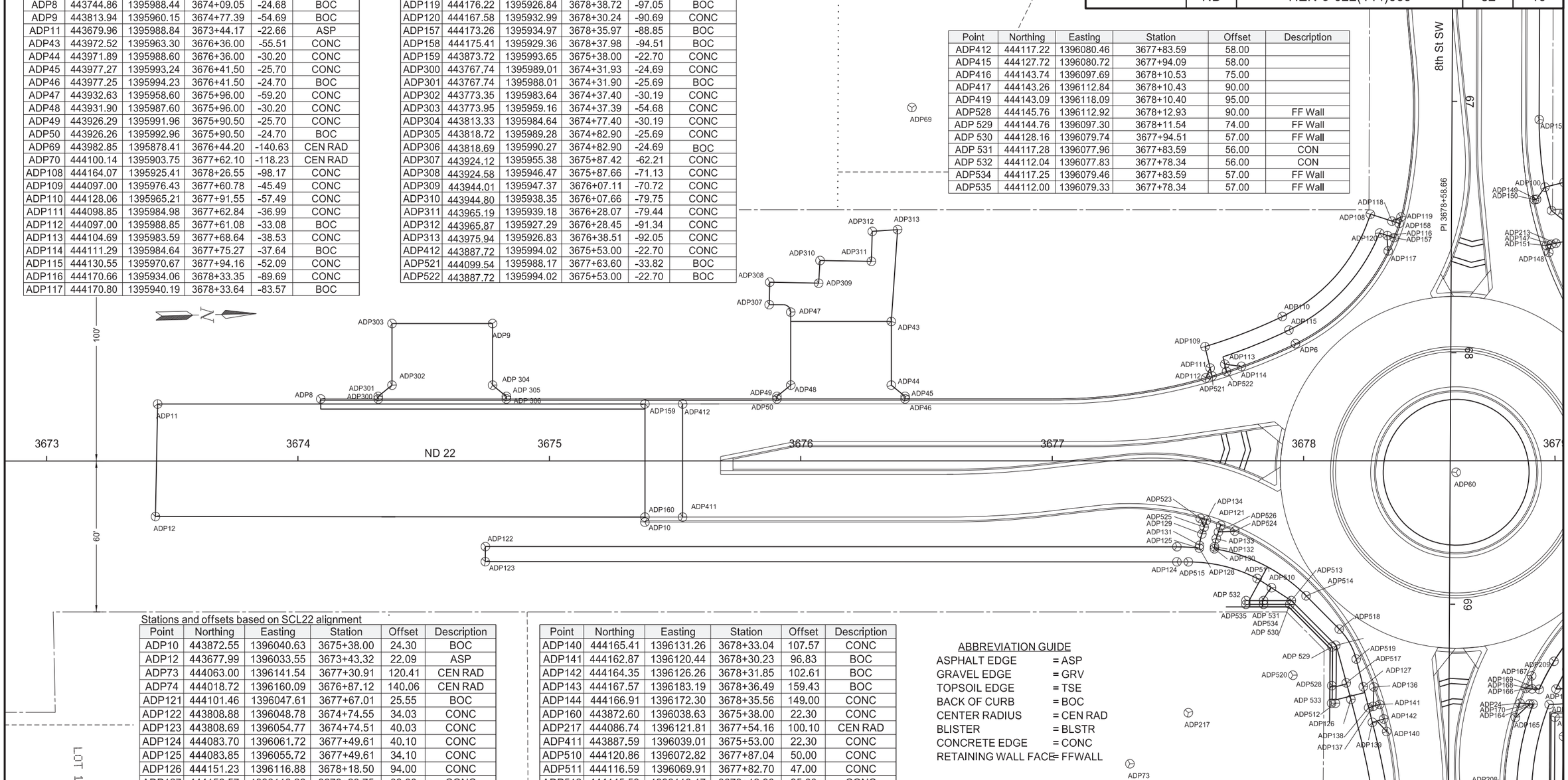

Stations and offsets based on SCL22 alignment

Point	Northing	Easting	Station	Offset	Description
ADP10	443872.55	1396040.63	3675+38.00	24.30	BOC
ADP12	443677.99	1396033.55	3673+43.32	22.09	ASP
ADP73	444063.00	1396141.54	3677+30.91	120.41	CEN RAD
ADP74	444018.72	1396160.09	3676+87.12	140.06	CEN RAD
ADP121	444101.46	1396047.61	3677+67.01	25.55	BOC
ADP122	443808.88	1396048.78	3674+74.55	34.03	CONC
ADP123	443808.69	1396054.77	3674+74.51	40.03	CONC
ADP124	444083.70	1396061.72	3677+49.61	40.10	CONC
ADP125	444083.85	1396055.72	3677+49.61	34.10	CONC
ADP126	444151.23	1396116.88	3678+18.50	94.00	CONC
ADP127	444156.57	1396113.26	3678+23.75	89.80	CONC
ADP128	444092.73	1396056.46	3677+58.51	34.62	CONC
ADP129	444093.93	1396050.86	3677+59.57	28.99	CONC
ADP130	444098.72	1396056.91	3677+64.51	34.92	CONC
ADP131	444092.86	1396055.39	3677+58.61	33.54	CONC
ADP132	444098.82	1396056.11	3677+64.59	34.11	CONC
ADP133	444099.58	1396052.88	3677+65.27	30.87	CONC
ADP134	444101.63	1396047.14	3677+67.17	25.08	BOC
ADP135	444096.01	1396045.03	3677+61.50	23.11	BOC
ADP136	444160.75	1396113.40	3678+27.93	89.84	BOC
ADP137	444160.28	1396121.14	3678+27.65	97.59	CONC
ADP138	444158.49	1396121.62	3678+25.87	98.11	CONC
ADP139	444159.83	1396127.47	3678+27.36	103.93	CONC

Point	Northing	Easting	Station	Offset	Description
ADP140	444165.41	1396131.26	3678+33.04	107.57	CONC
ADP141	444162.87	1396120.44	3678+30.23	96.83	BOC
ADP142	444164.35	1396126.26	3678+31.85	102.61	BOC
ADP143	444167.57	1396183.19	3678+36.49	159.43	BOC
ADP144	444166.91	1396172.30	3678+35.56	149.00	CONC
ADP160	443872.60	1396038.63	3675+38.00	22.30	CONC
ADP217	444086.74	1396121.81	3677+54.16	100.10	CEN RAD
ADP411	443887.59	1396039.01	3675+53.00	22.30	CONC
ADP510	444120.86	1396072.82	3677+87.04	50.00	CONC
ADP511	444116.59	1396069.91	3677+82.70	47.00	CONC
ADP512	444145.59	1396118.17	3678+12.90	95.00	CONC
ADP513	444128.82	1396078.25	3677+95.13	56.00	CONC
ADP514	444134.72	1396076.49	3678+00.98	54.00	CONC
ADP515	444088.26	1396061.83	3677+54.17	40.00	CONC
ADP516	444154.02	1396102.14	3678+13.04	74.00	CONC
ADP517	444150.00	1396111.88	3678+17.14	89.00	CONC
ADP518	444147.58	1396090.10	3678+14.18	66.87	CONC
ADP519	444154.02	1396102.14	3678+20.92	78.76	CONC
ADP520	444128.68	1396107.95	3677+95.73	85.20	CEN RAD
ADP523	444093.43	1396044.71	3677+58.91	22.85	BOC
ADP524	444107.01	1396050.25	3677+72.62	27.88	BOC
ADP525	444094.89	1396048.18	3677+60.46	26.29	CONC
ADP526	444100.52	1396050.25	3677+66.14	28.21	CONC

ABBREVIATION GUIDE

ASPHALT EDGE	= ASP
GRAVEL EDGE	= GRV
TOPSOIL EDGE	= TSE
BACK OF CURB	= BOC
CENTER RADIUS	= CEN RAD
BLISTER	= BLSTR
CONCRETE EDGE	= CONC
RETAINING WALL FACE	= FFWALL

Survey Data Layout

ND 22 and 8th St S Intersection

Sta 3673+00 to Sta 3679+00

REGISTERED PROFESSIONAL ENGINEER
DAWN L.S. MICHEL
PE-8029
DATE 2025.12.18 09:07:17 -06'00'
NORTH DAKOTA

STATE	PROJECT NO.	SECTION NO.	SHEET NO.
ND	HEN-5-022(144)069	82	11

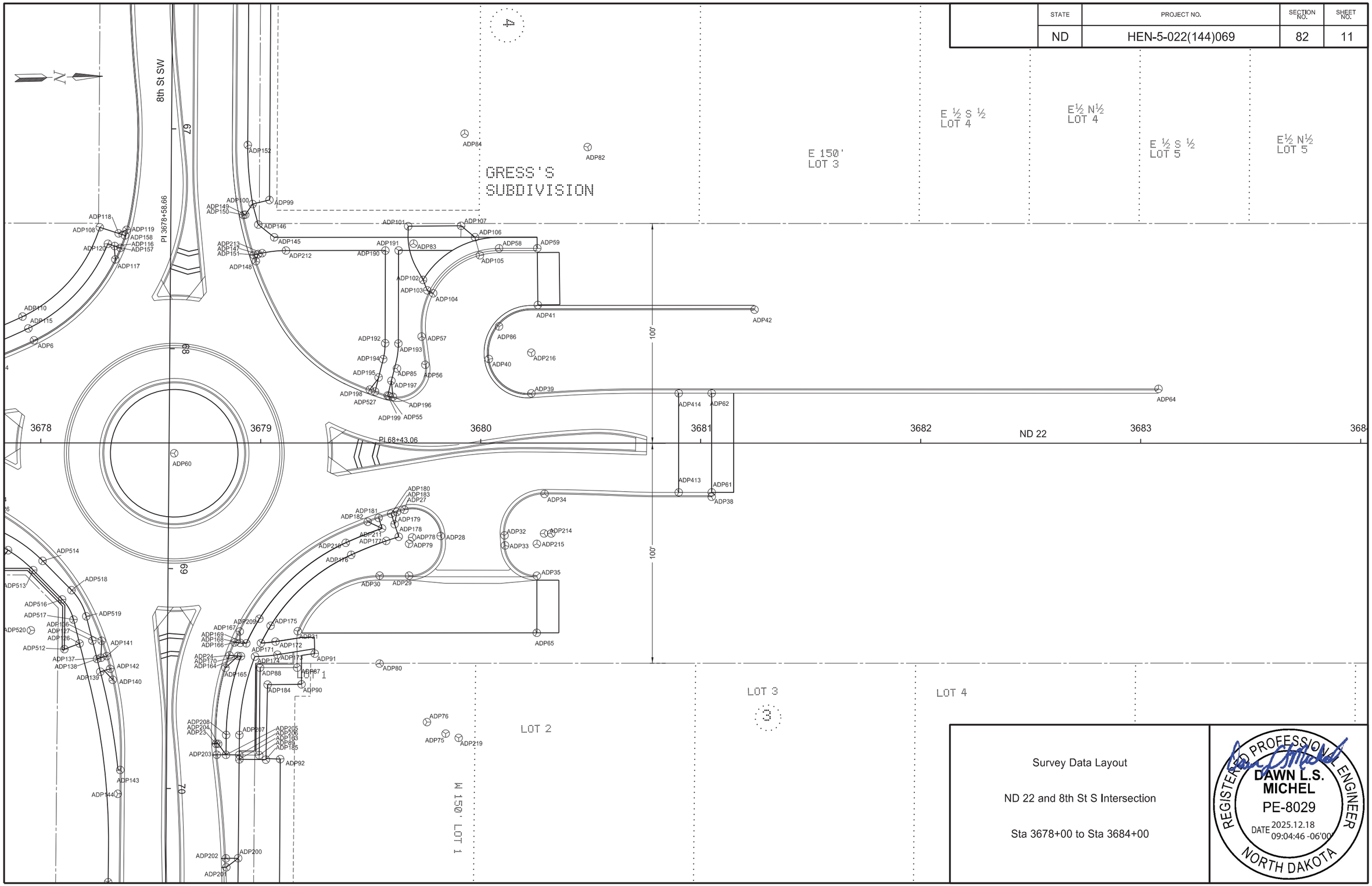

Survey Data Layout

ND 22 and 8th St S Intersection

Sta 3678+00 to Sta 3684+00

REGISTERED PROFESSIONAL ENGINEER
DAWN L.S. MICHEL
PE-8029
DATE 2025.12.18 09:04:46 -06'00'
NORTH DAKOTA

STATE	PROJECT NO.	SECTION NO.	SHEET NO.
ND	HEN-5-022(144)069	82	12

Stations and offsets based on SCL22 alignment - NE quadrant

Point	Northing	Easting	Station	Offset	Description
ADP23	444211.71	1396161.38	3678+79.66	136.60	BOC
ADP24	444218.74	1396121.33	3678+85.81	96.40	BOC
ADP27	444299.69	1396056.92	3679+65.32	30.22	BOC
ADP28	444315.90	1396069.16	3679+81.80	42.11	BOC
ADP29	444301.15	1396086.89	3679+67.44	60.15	BOC
ADP30	444287.77	1396086.58	3679+54.05	60.14	BOC
ADP31	444249.99	1396111.05	3679+16.82	85.43	BOC
ADP32	444344.92	1396069.55	3680+10.82	41.85	BOC
ADP33	444345.04	1396074.11	3680+11.04	46.41	BOC
ADP34	444363.51	1396051.08	3680+29.00	22.97	BOC
ADP35	444359.20	1396088.22	3680+25.51	60.20	BOC
ADP38	444439.46	1396054.07	3681+05.00	24.30	BOC
ADP61	444439.51	1396052.07	3681+05.00	22.30	ASP
ADP65	444358.61	1396114.15	3680+25.49	86.15	CONC
ADP66	444496.38	1396093.28	3681+62.77	62.24	CONC
ADP75	444316.19	1396159.08	3679+84.06	132.00	CEN RAD
ADP76	444307.79	1396153.65	3679+75.55	126.75	CEN RAD
ADP78	444302.90	1396069.51	3679+68.81	42.74	CEN RAD
ADP79	444301.48	1396072.39	3679+67.45	45.65	CEN RAD
ADP80	444286.85	1396126.57	3679+54.02	100.14	CEN RAD
ADP87	444249.33	1396127.61	3679+16.53	102.00	BOC
ADP88	444232.48	1396127.24	3678+99.67	102.00	BOC
ADP89	444231.21	1396166.99	3678+99.28	141.77	BOC
ADP90	444251.17	1396135.22	3679+18.53	109.57	ASP
ADP91	444257.50	1396121.39	3679+24.56	95.61	ASP
ADP92	444240.72	1396169.01	3679+08.84	143.58	ASP
ADP163	444222.15	1396168.70	3678+90.26	143.69	ASP
ADP164	444223.94	1396121.81	3678+91.02	96.76	CONC
ADP165	444216.74	1396126.96	3678+83.94	102.07	BOC
ADP166	444221.19	1396115.53	3678+88.13	90.55	BOC
ADP167	444223.62	1396110.59	3678+90.45	85.55	BOC
ADP168	444223.68	1396115.77	3678+90.63	90.73	CONC
ADP169	444226.49	1396116.02	3678+93.44	90.92	CONC
ADP170	444222.63	1396121.69	3678+89.71	96.67	CONC
ADP171	444233.16	1396116.08	3679+00.11	90.84	CONC
ADP172	444239.75	1396115.55	3679+06.68	90.16	CONC
ADP173	444240.51	1396121.50	3679+07.58	96.09	CONC
ADP174	444230.30	1396122.12	3678+97.38	96.94	CONC
ADP175	444237.69	1396108.28	3679+04.47	82.93	CONC
ADP176	444275.04	1396076.84	3679+41.11	50.68	CONC
ADP177	444291.09	1396070.84	3679+57.03	44.33	CONC
ADP178	444296.83	1396069.09	3679+62.73	42.45	CONC
ADP179	444295.08	1396063.35	3679+60.85	36.75	CONC
ADP180	444293.62	1396058.57	3679+59.29	32.00	BOC
ADP181	444287.88	1396060.32	3679+53.59	33.88	BOC
ADP182	444282.89	1396062.00	3679+48.64	35.67	BOC
ADP183	444296.23	1396057.83	3679+61.88	31.21	BOC
ADP184	444235.72	1396135.00	3679+03.09	109.70	ASP
ADP185	444234.21	1396169.09	3679+02.32	143.80	ASP
ADP200	444220.63	1396213.66	3678+89.73	188.66	CONC
ADP201	444215.15	1396217.63	3678+84.34	192.75	BOC
ADP202	444215.07	1396213.58	3678+84.17	188.71	BOC
ADP203	444211.94	1396166.40	3678+80.00	141.61	BOC
ADP204	444212.68	1396161.42	3678+80.63	136.61	CONC
ADP205	444216.12	1396166.51	3678+84.18	141.63	CONC
ADP206	444222.12	1396166.70	3678+90.18	141.69	CONC
ADP207	444222.41	1396157.63	3678+90.27	132.61	CONC
ADP208	444216.41	1396157.46	3678+84.27	132.58	CONC
ADP209	444232.65	1396105.02	3678+99.36	79.79	CONC
ADP210	444272.68	1396071.32	3679+38.64	45.21	CONC
ADP211	444289.34	1396065.10	3679+55.15	38.63	CONC
ADP214	444362.91	1396069.07	3680+28.80	40.97	CEN RAD
ADP215	444359.54	1396073.72	3680+25.52	45.70	CEN RAD
ADP219	444322.05	1396161.15	3679+89.97	133.94	CEN RAD
ADP413	444424.52	1396051.74	3680+90.00	22.30	CONC

Stations and offsets based on SCL22 alignment - NW quadrant

Point	Northing	Easting	Station	Offset	Description
ADP39	444358.54	1396005.25	3680+23.02	-22.73	BOC
ADP40	444339.58	1395989.22	3680+03.72	-38.34	BOC
ADP41	444362.37	1395965.11	3680+25.96	-62.94	BOC
ADP42	444460.83	1395968.45	3681+24.50	-60.78	BOC
ADP55	444293.83	1396004.99	3679+58.32	-21.57	BOC
ADP56	444310.63	1395991.18	3679+74.81	-35.74	BOC
ADP57	444309.23	1395978.30	3679+73.13	-48.59	BOC
ADP58	444345.32	1395939.00	3680+08.35	-88.68	BOC
ADP59	444362.68	1395939.33	3680+25.71	-88.73	BOC
ADP62	444440.50	1396006.98	3681+05.00	-22.80	ASP
ADP64	444643.64	1396009.51	3683+08.15	-24.75	BOC
ADP82	444386.60	1395893.84	3680+48.62	-134.73	CEN RAD
ADP83	444306.51	1395935.98	3679+69.48	-90.83	CNE RAD
ADP84	444330.83	1395886.50	3679+92.71	-140.84	CEN RAD
ADP85	444297.70	1395992.58	3679+61.92	-34.06	CEN RAD
ADP86	444344.53	1395974.49	3680+08.34	-53.18	CEN RAD
ADP99	444241.45	1395914.68	3679+03.97	-110.71	ASP
ADP100	444233.75	1395916.38	3678+96.31	-108.84	CONC
ADP101	444304.26	1395928.03	3679+67.06	-98.74	CONC
ADP102	444310.45	1395952.55	3679+73.78	-74.36	CONC
ADP103	444312.27	1395957.36	3679+75.70	-69.59	CONC
ADP104	444314.91	1395958.77	3679+78.38	-68.24	CONC
ADP105	444336.54	1395941.95	3679+99.63	-85.53	CONC
ADP106	444334.51	1395933.71	3679+97.43	-93.72	CONC
ADP107	444328.27	1395928.34	3679+91.07	-98.95	CONC
ADP145	444243.24	1395931.73	3679+06.13	-93.70	CONC
ADP146	444236.14	1395925.77	3678+98.90	-99.50	CONC
ADP147	444235.75	1395939.17	3678+98.81	-86.09	CONC
ADP148	444234.67	1395942.37	3678+97.80	-82.87	BOC
ADP149	444230.30	1395921.12	3678+92.96	-104.02	CONC
ADP150	444229.48	1395921.27	3678+92.14	-103.85	BOC
ADP151	444233.79	1395939.56	3678+96.86	-85.66	BOC
ADP152	444232.16	1395889.46	3678+94.13	-135.71	CONC
ADP190	444293.65	1395938.83	3679+56.68	-87.71	CONC
ADP191	444299.65	1395938.96	3679+62.68	-87.71	CONC
ADP192	444292.62	1395980.99	3679+56.58	-45.54	CONC
ADP193	444298.62	1395981.25	3679+62.58	-45.40	CONC
ADP194	444291.55	1395988.22	3679+55.67	-38.28	CONC
ADP195	444289.28	1395996.48	3679+53.58	-29.98	CONC
ADP196	444295.60	1396005.41	3679+60.10	-21.19	BOC
ADP197	444295.04	1395998.14	3679+59.38	-28.44	CONC
ADP198	444285.13	1396001.91	3679+49.56	-24.45	BOC
ADP199	444293.21	1396004.79	3679+57.70	-21.75	BOC
ADP212	444248.47	1395937.85	3679+11.49	-87.70	CONC
ADP213	444237.59	1395938.80	3679+00.64	-86.50	CONC
ADP216	444358.93	1395986.76	3680+23.01	-41.23	CEN RAD
ADP414	444425.50	1396006.66	3680+90.00	-22.79	CONC
ADP527	444287.53	1396002.83	3679+51.97	-23.59	BOC

ABBREVIATION GUIDE

ASPHALT EDGE	= ASP
GRAVEL EDGE	= GRV
TOPSOIL EDGE	= TSE
BACK OF CURB	= BOC
CENTER RADIUS	= CEN RAD
BLISTER	= BLSTR

Survey Data Layout

ND 22 and 8th St S Intersection

REGISTERED PROFESSIONAL ENGINEER
DAWN L.S. MICHEL
PE-8029
DATE 2025.12.18 09:05:01 -06'00'
NORTH DAKOTA

STATE	PROJECT NO.	SECTION NO.	SHEET NO.
ND	HEN-5-022(144)069	82	13

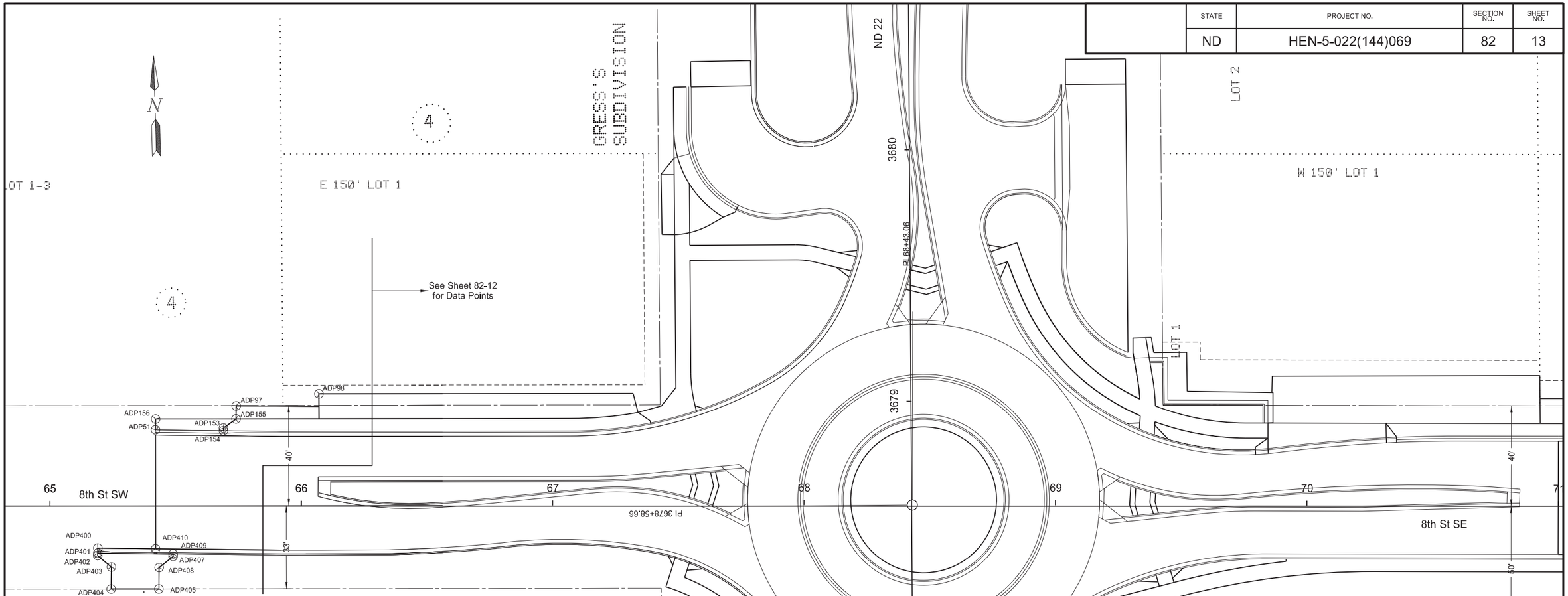

Stations and offsets based on SCL22 alignment

Point	Northing	Easting	Station	Offset	Description
ADP51	444232.55	1395724.31	3678+90.88	-300.83	BOC
ADP71	444042.28	1395776.30	3677+01.06	-244.19	CEN RAD
ADP72	444001.35	1395693.24	3676+58.07	-326.20	CEN RAD
ADP97	444241.16	1395756.70	3679+00.20	-268.64	CONC
ADP98	444245.00	1395789.74	3679+04.76	-235.69	ASP
ADP153	444232.46	1395751.36	3678+91.39	-273.79	CONC
ADP154	444231.31	1395751.32	3678+90.24	-273.80	BOC
ADP155	444235.94	1395756.48	3678+94.97	-268.74	CONC
ADP156	444236.84	1395724.49	3678+95.18	-300.74	CONC
ADP400	444186.24	1395699.96	3678+43.07	-324.11	CONC
ADP401	444184.24	1395699.88	3678+41.07	-324.14	BOC
ADP402	444183.24	1395699.84	3678+40.07	-324.16	CONC
ADP403	444178.52	1395705.15	3678+35.48	-318.73	CONC
ADP404	444169.77	1395704.79	3678+26.73	-318.87	CONC
ADP405	444169.24	1395723.79	3678+26.67	-299.87	CONC
ADP407	444182.01	1395729.81	3678+39.59	-294.16	CONC
ADP408	444177.74	1395724.13	3678+26.73	-299.73	CONC
ADP409	444183.01	1395729.85	3678+40.59	-294.14	BOC
ADP410	444185.30	1395722.94	3678+42.70	-301.11	CONC

ABBREVIATION GUIDE

ASPHALT EDGE	= ASP
GRAVEL EDGE	= GRV
TOPSOIL EDGE	= TSE
BACK OF CURB	= BOC
CENTER RADIUS	= CEN RAD
BLISTER	= BLSTR
CONCRETE EDGE	= CONC

Survey Data Layout

ND 22 and 8th St S Intersection

Sta 65+00 to Sta 67+00

REGISTERED PROFESSIONAL ENGINEER
DAWN L.S. MICHEL
PE-8029
DATE 2025.12.18 09:05:16 -06'00'
NORTH DAKOTA

STATE	PROJECT NO.	SECTION NO.	SHEET NO.
ND	HEN-5-022(144)069	82	14

Stations and offsets based on SCL22 alignment

Point	Northing	Easting	Station	Offset	Description
ADP18	444159.85	1396424.02	3678+34.80	400.38	BOC
ADP19	444210.30	1396382.01	3678+83.11	357.20	BOC
ADP20	444213.45	1396282.06	3678+84.06	257.20	BOC
ADP77	444348.98	1396250.23	3680+18.85	222.40	CEN RAD
ADP81	444166.47	1396280.56	3678+37.83	256.81	CONC
ADP93	444237.77	1396275.38	3679+08.23	249.99	ASP
ADP94	444228.68	1396275.18	3678+99.13	249.99	ASP
ADP95	444226.61	1396340.67	3678+98.50	315.51	ASP
ADP96	444208.28	1396381.94	3678+81.08	357.18	ASP
ADP161	444215.27	1396382.16	3678+88.08	357.25	CONC
ADP162	444211.62	1396340.20	3678+83.50	315.37	BOC
ADP186	444218.68	1396274.96	3678+89.13	249.99	CONC
ADP187	444161.29	1396223.26	3678+31.22	199.65	CONC
ADP188	444154.92	1396423.85	3678+29.86	400.34	CONC
ADP189	444163.37	1396380.52	3678+37.23	356.81	ASP

ABBREVIATION GUIDE

ASPHALT EDGE	= ASP
GRAVEL EDGE	= GRV
TOPSOIL EDGE	= TSE
BACK OF CURB	= BOC
CENTER RADIUS	= CEN RAD
BLISTER	= BLSTR
CONCRETE EDGE	= CONC

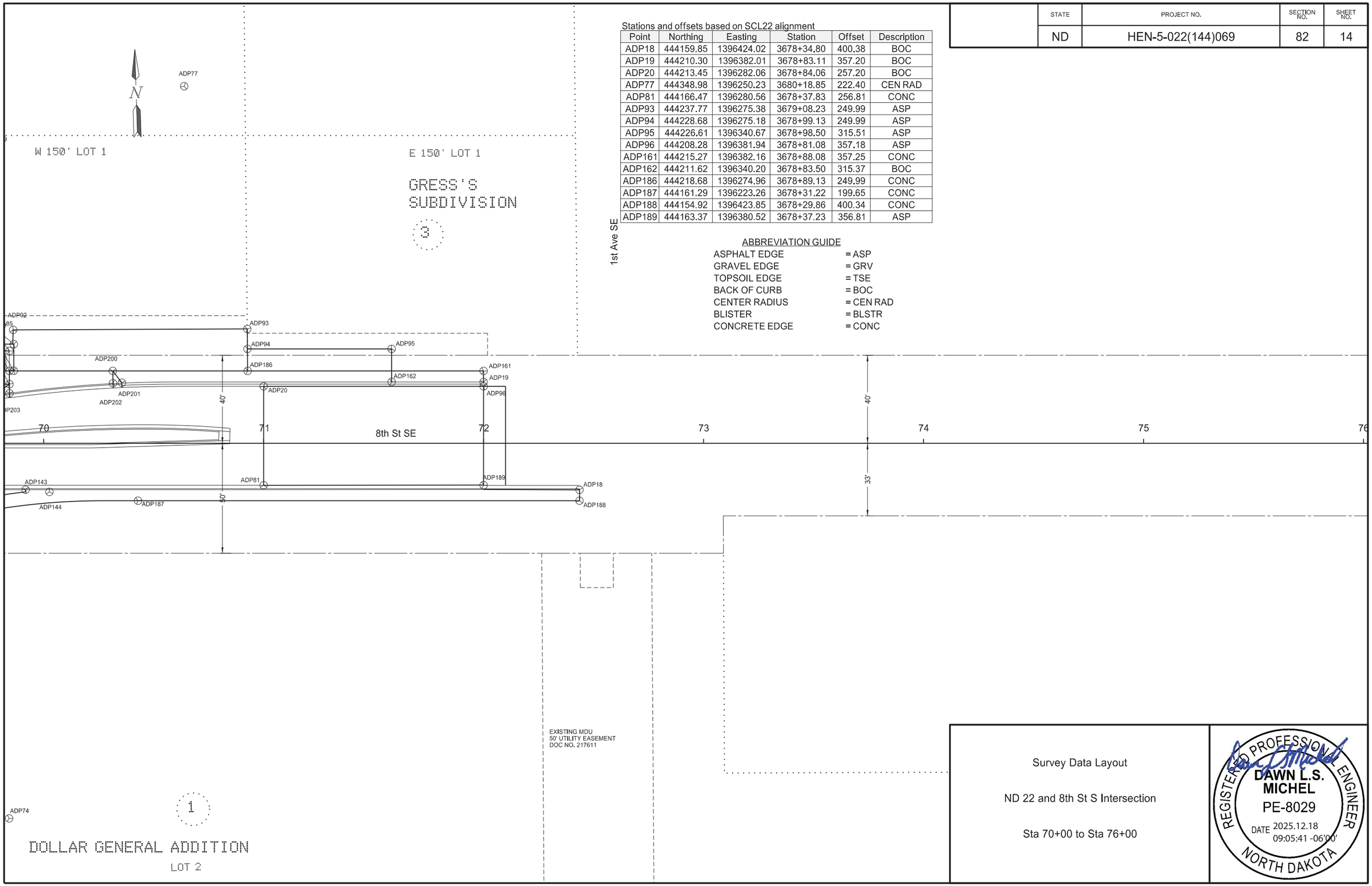

Survey Data Layout

ND 22 and 8th St S Intersection

Sta 70+00 to Sta 76+00

REGISTERED PROFESSIONAL ENGINEER
DAWN L.S. MICHEL
PE-8029
DATE 2025.12.18 09:05:41 -06'00'
NORTH DAKOTA

STATE	PROJECT NO.	SECTION NO.	SHEET NO.
ND	HEN-5-022(144)069	82	15

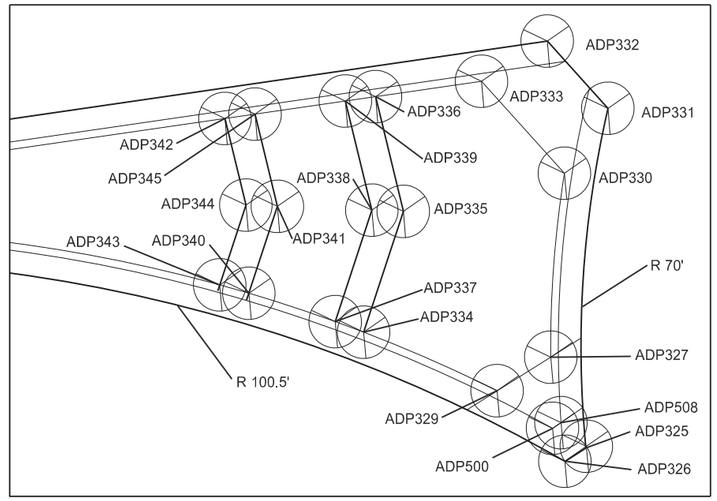

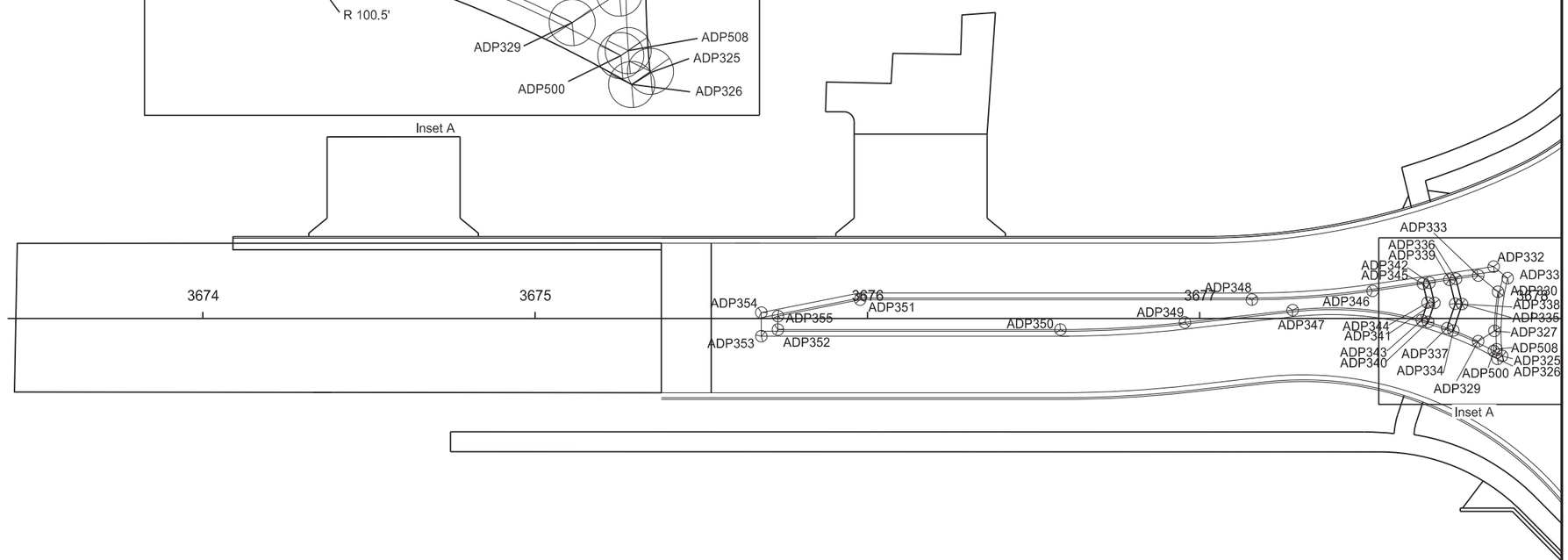

Stations and offsets based on SCL22 alignment

Point	Northing	Easting	Station	Offset	Description
ADP325	444125.81	1396033.90	3677+91.01	11.24	CONC
ADP326	444124.41	1396034.74	3677+89.63	12.11	CONC
ADP327	444123.68	1396026.32	3677+88.69	3.71	BOC
ADP329	444118.72	1396029.28	3677+83.81	6.80	BOC
ADP330	444125.07	1396014.56	3677+89.79	-8.08	BOC
ADP331	444127.82	1396011.51	3677+92.46	-11.19	CONC
ADP332	444123.93	1396006.97	3677+88.46	-15.63	CONC
ADP333	444119.23	1396009.53	3677+83.83	-12.96	BOC
ADP334	444111.33	1396025.88	3677+76.34	3.59	BOC
ADP335	444114.15	1396017.98	3677+78.96	-4.39	TAP
ADP336	444112.51	1396010.36	3677+77.12	-11.97	BOC
ADP337	444109.47	1396025.14	3677+74.46	2.89	BOC
ADP338	444112.08	1396017.84	3677+76.88	-4.47	TAP
ADP339	444110.51	1396010.60	3677+75.14	-11.68	BOC
ADP340	444103.82	1396023.12	3677+68.76	1.01	BOC
ADP341	444105.85	1396017.44	3677+70.65	-4.72	TAP
ADP342	444104.53	1396011.31	3677+69.17	-10.81	BOC
ADP343	444101.91	1396022.53	3677+66.84	0.46	BOC
ADP344	444103.77	1396017.30	3677+68.57	-4.80	TAP
ADP345	444102.53	1396011.55	3677+67.18	-10.52	BOC
ADP346	444087.30	1396013.37	3677+52.00	-8.32	BOC
ADP347	444063.13	1396018.54	3677+27.97	-2.55	BOC
ADP348	444050.97	1396015.09	3677+15.73	-5.70	BOC
ADP349	444030.63	1396021.44	3676+95.55	1.16	BOC
ADP350	443993.11	1396022.64	3676+58.07	3.30	BOC
ADP351	443933.09	1396012.14	3675+97.81	-5.70	BOC
ADP352	443908.13	1396020.51	3675+73.06	3.30	BOC
ADP353	443903.08	1396022.39	3675+68.06	5.30	CONC
ADP354	443903.26	1396015.30	3675+68.06	-1.79	CONC
ADP355	443908.23	1396016.47	3675+73.06	-0.75	BOC
ADP500	444123.33	1396032.35	3677+88.49	9.75	GUT
ADP508	444124.19	1396031.84	3677+89.34	9.22	GUT

ABBREVIATION GUIDE

ASPHALT EDGE	= ASP
GRAVEL EDGE	= GRV
TOPSOIL EDGE	= TSE
BACK OF CURB	= BOC
CENTER RADIUS	= CEN RAD
BLISTER	= BLSTR
CONCRETE EDGE	= CONC
TAPER EDGE	= TAP
GUTTER	= GUT

Survey Data Layout

ND 22 and 8th St S Intersection

Sta 3672+00 to Sta 3678+00

REGISTERED PROFESSIONAL ENGINEER
DAWN L.S. MICHEL
PE-8029
DATE 2025.12.18 09:05:55 -06'00'
NORTH DAKOTA

STATE	PROJECT NO.	SECTION NO.	SHEET NO.
ND	HEN-5-022(144)069	82	16

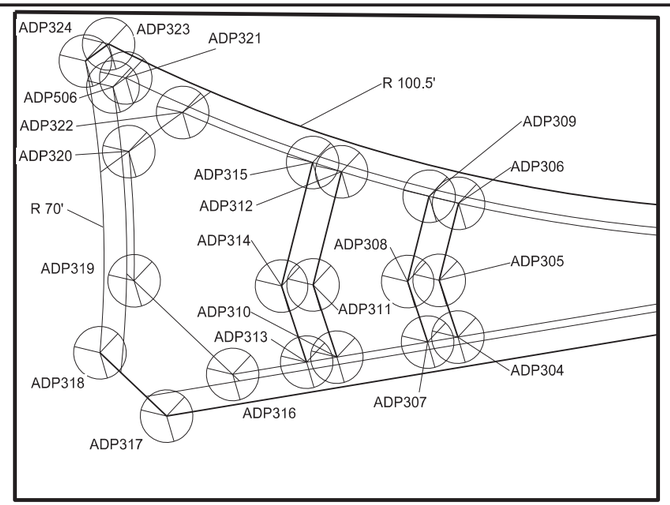

Inset B

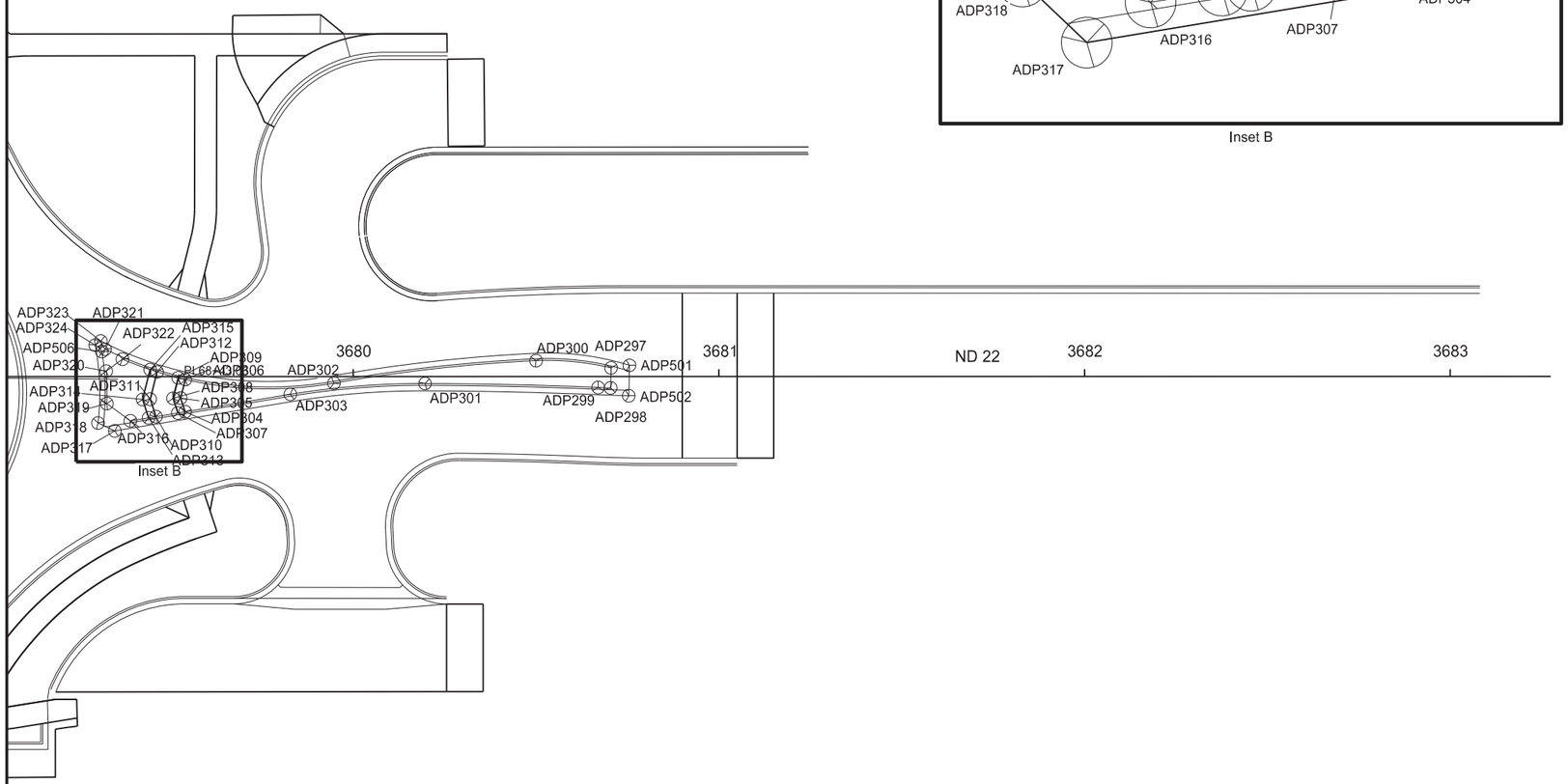

Stations and offsets based on SCL22 alignment

Point	Northing	Easting	Station	Offset	Description
ADP297	444405.57	1396026.67	3680+70.51	-2.36	BOC
ADP298	444405.33	1396032.14	3680+70.39	3.13	BOC
ADP299	444401.92	1396031.94	3680+66.98	3.00	BOC
ADP300	444385.10	1396024.23	3680+49.99	-4.34	BOC
ADP301	444354.60	1396029.80	3680+19.62	1.90	BOC
ADP302	444329.72	1396029.15	3679+94.73	1.80	BOC
ADP303	444317.72	1396031.96	3679+82.79	4.87	BOC
ADP304	444288.85	1396036.09	3679+54.03	9.64	BOC
ADP305	444287.70	1396032.32	3679+52.79	5.90	TAP
ADP306	444289.09	1396027.27	3679+54.08	0.81	BOC
ADP307	444286.85	1396036.38	3679+52.03	9.97	BOC
ADP308	444285.62	1396032.35	3679+50.71	5.97	TAP
ADP309	444287.16	1396026.76	3679+52.13	0.35	BOC
ADP310	444280.84	1396037.24	3679+46.04	10.96	BOC
ADP311	444279.37	1396032.44	3679+44.47	6.19	TAP
ADP312	444281.42	1396025.02	3679+46.35	-1.27	BOC
ADP313	444278.83	1396037.53	3679+44.04	11.29	BOC
ADP314	444277.29	1396032.47	3679+42.39	6.27	TAP
ADP315	444279.52	1396024.36	3679+44.44	-1.89	BOC
ADP316	444273.82	1396038.25	3679+39.04	12.12	BOC
ADP317	444269.51	1396040.88	3679+34.80	14.85	CONC
ADP318	444265.20	1396036.61	3679+30.40	10.67	CONC
ADP319	444267.49	1396033.38	3679+32.61	7.40	BOC
ADP320	444267.50	1396024.50	3679+32.42	-1.48	BOC
ADP321	444267.33	1396018.52	3679+32.13	-7.46	GUT
ADP322	444272.02	1396021.34	3679+36.88	-4.74	BOC
ADP323	444266.23	1396016.24	3679+30.97	-9.71	CONC
ADP324	444264.67	1396017.33	3679+29.44	-8.59	CONC
ADP501	444410.60	1396026.08	3680+75.53	-3.05	CONC
ADP502	444410.23	1396034.38	3680+75.34	5.25	CONC
ADP506	444266.46	1396019.13	3679+31.27	-6.83	GUT

ABBREVIATION GUIDE

ASPHALT EDGE	= ASP
GRAVEL EDGE	= GRV
TOPSOIL EDGE	= TSE
BACK OF CURB	= BOC
CENTER RADIUS	= CEN RAD
BLISTER	= BLSTR
CONCRETE EDGE	= CONC
TAPER EDGE	= TAP
GUTTER	= GUT

Survey Data Layout

ND 22 and 8th St S Intersection

Sta 3679+00 to Sta

REGISTERED PROFESSIONAL ENGINEER
DAWN L.S. MICHEL
PE-8029
DATE 2025.12.18 09:06:13 -06'00'
NORTH DAKOTA

STATE	PROJECT NO.	SECTION NO.	SHEET NO.
ND	HEN-5-022(144)069	82	17

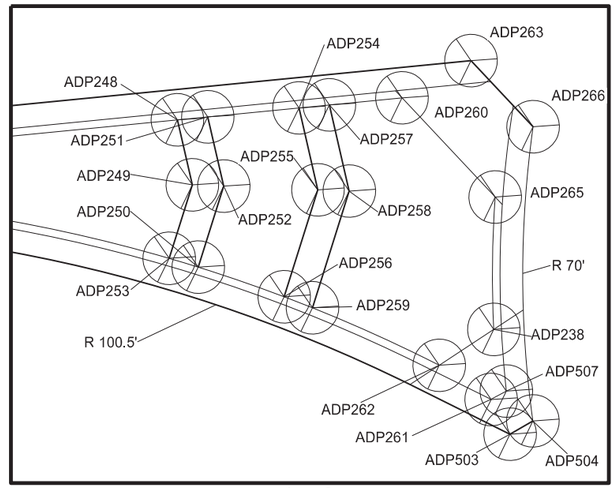

Inset C

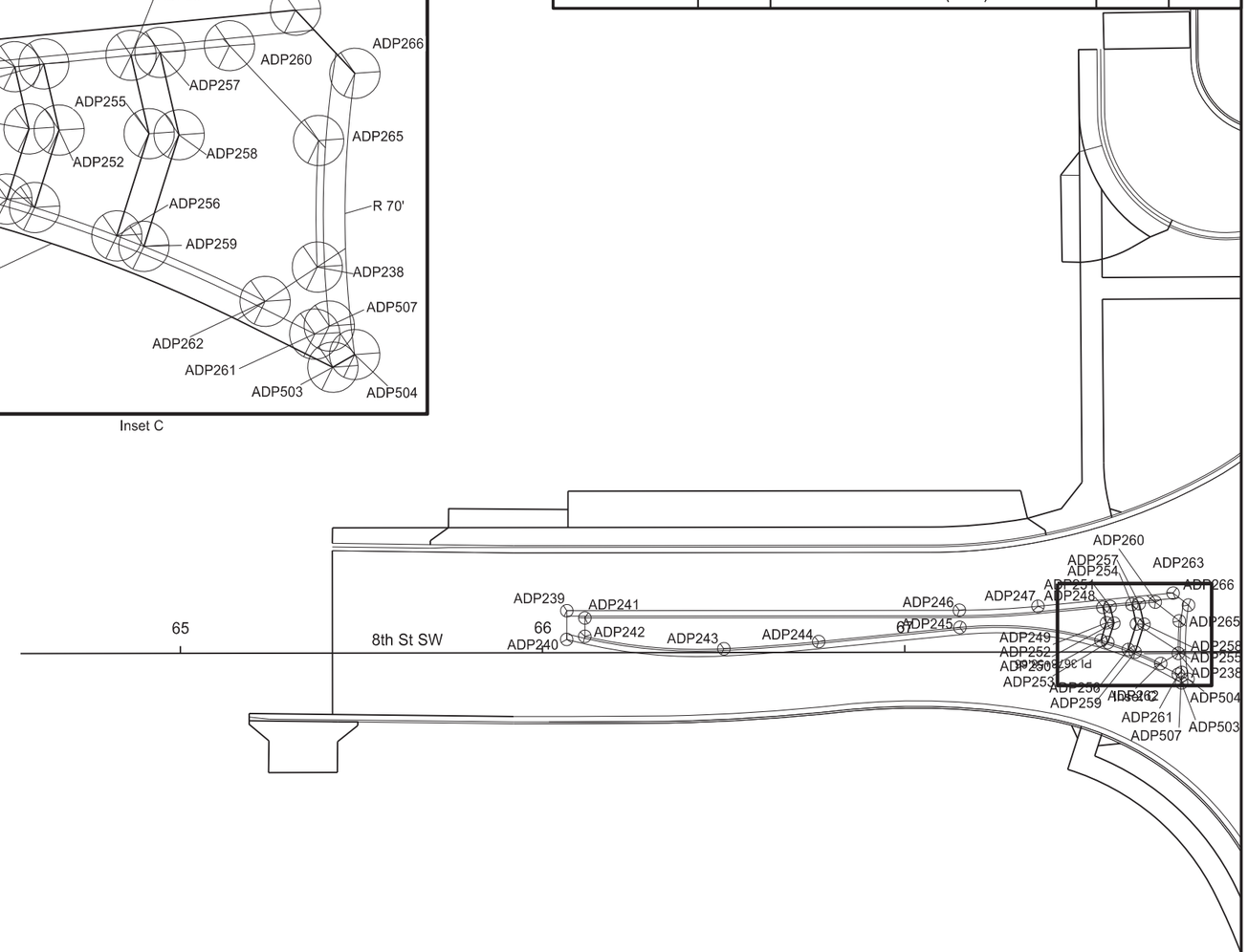

Stations and offsets based on SCL22 alignment

Point	Northing	Easting	Station	Offset	Description
ADP238	444195.26	1395956.89	3678+58.51	-67.48	BOC
ADP239	444212.02	1395788.46	3678+71.77	-236.24	CONC
ADP240	444204.09	1395788.19	3678+63.84	-236.34	CONC
ADP241	444209.88	1395793.39	3678+69.73	-231.27	BOC
ADP242	444204.78	1395793.21	3678+64.64	-231.33	BOC
ADP243	444200.23	1395831.49	3678+60.92	-192.96	BOC
ADP244	444201.43	1395857.71	3678+62.71	-166.78	BOC
ADP245	444204.20	1395896.81	3678+66.33	-127.75	BOC
ADP246	444208.95	1395896.80	3678+71.08	-127.86	BOC
ADP247	444209.38	1395918.53	3678+71.99	-106.14	BOC
ADP248	444208.59	1395936.44	3678+71.60	-88.23	BOC
ADP249	444204.27	1395937.30	3678+67.30	-87.27	TAP
ADP250	444199.47	1395935.63	3678+62.46	-88.84	BOC
ADP251	444208.73	1395938.45	3678+71.78	-86.22	BOC
ADP252	444204.13	1395939.37	3678+67.20	-85.20	TAP
ADP253	444198.84	1395937.52	3678+61.86	-86.93	BOC
ADP254	444209.14	1395944.48	3678+72.32	-80.19	BOC
ADP255	444203.70	1395945.57	3678+66.91	-78.99	TAP
ADP256	444196.71	1395943.14	3678+59.86	-81.27	BOC
ADP257	444209.28	1395946.50	3678+72.50	-78.19	BOC
ADP258	444203.56	1395947.64	3678+66.81	-76.92	TAP
ADP259	444195.93	1395944.98	3678+59.12	-79.41	BOC
ADP260	444209.61	1395951.30	3678+72.94	-73.39	BOC
ADP261	444189.47	1395956.71	3678+52.72	-67.52	GUT
ADP262	444192.58	1395951.95	3678+55.71	-72.36	BOC
ADP263	444211.93	1395955.93	3678+75.36	-68.82	CONC
ADP265	444202.88	1395957.26	3678+66.34	-67.29	BOC
ADP266	444207.44	1395959.90	3678+70.96	-64.75	CONC
ADP503	444187.06	1395957.51	3678+50.33	-66.67	CONC
ADP504	444188.03	1395959.31	3678+51.35	-64.89	CONC
ADP507	444189.96	1395957.62	3678+53.23	-66.63	GUT

ABBREVIATION GUIDE

ASPHALT EDGE	= ASP
GRAVEL EDGE	= GRV
TOPSOIL EDGE	= TSE
BACK OF CURB	= BOC
CENTER RADIUS	= CEN RAD
BLISTER	= BLSTR
CONCRETE EDGE	= CONC
TAPER EDGE	= TAP
GUTTER	= GUT

Survey Data Layout

ND 22 and 8th St S Intersection

Sta 65+00 to 68+00

REGISTERED PROFESSIONAL ENGINEER
DAWN L.S. MICHEL
PE-8029
DATE 2025.12.18 09:06:27 -06'00'
NORTH DAKOTA

STATE	PROJECT NO.	SECTION NO.	SHEET NO.
ND	HEN-5-022(144)069	82	18

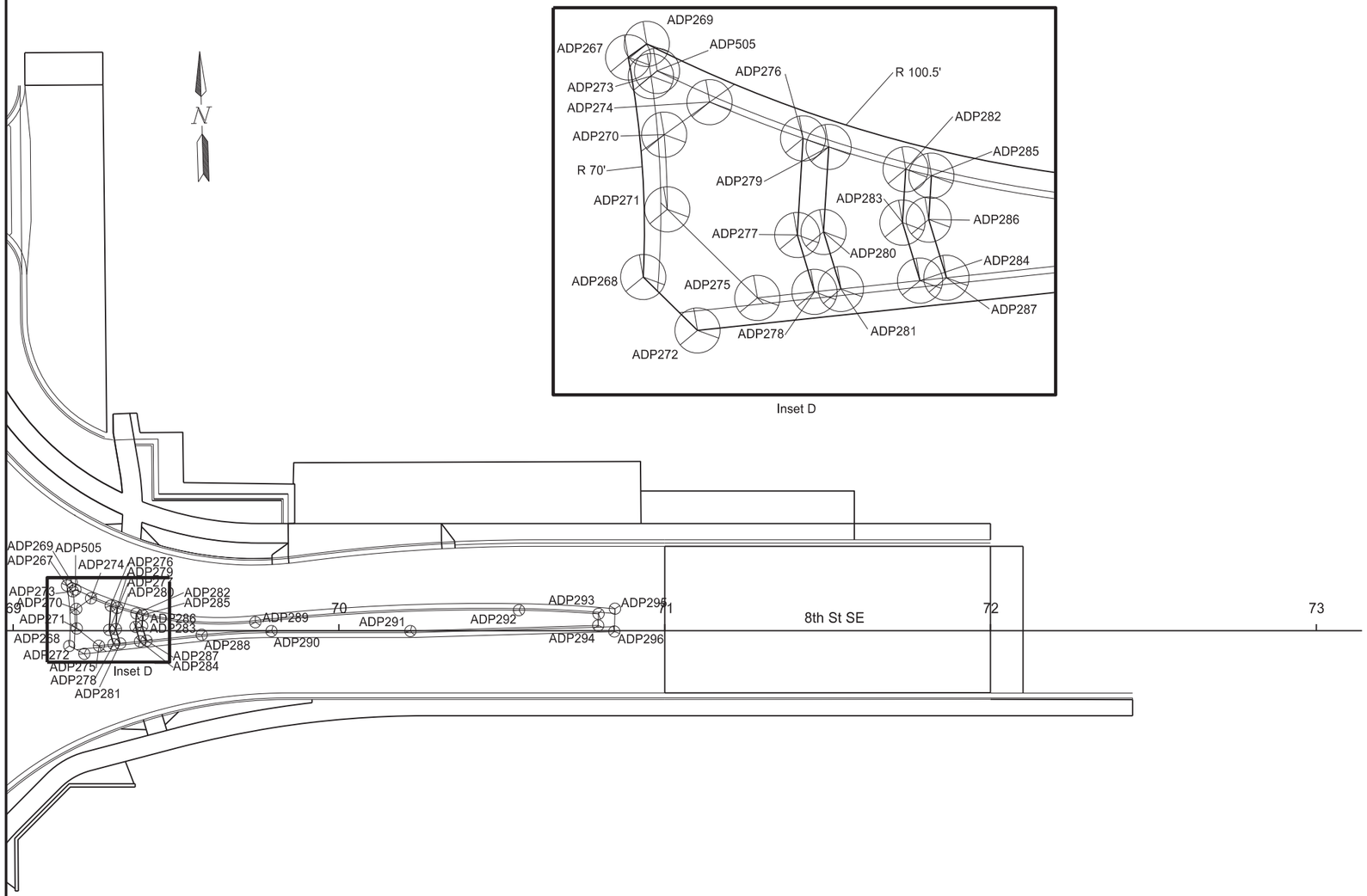

Stations and offsets based on SCL22 alignment

Point	Northing	Easting	Station	Offset	Description
ADP267	444205.27	1396098.23	3678+71.83	73.60	CONC
ADP268	444186.71	1396098.32	3678+53.50	74.12	CONC
ADP269	444206.26	1396099.69	3678+72.85	75.04	CONC
ADP270	444197.99	1396100.85	3678+64.62	76.38	BOC
ADP271	444192.02	1396100.80	3678+58.66	76.46	BOC
ADP272	444184.15	1396102.88	3678+51.05	78.74	CONC
ADP273	444203.43	1396099.97	3678+70.03	75.38	GUT
ADP274	444201.12	1396105.48	3678+67.84	80.94	BOC
ADP275	444186.49	1396107.43	3678+53.51	83.23	BOC
ADP276	444198.63	1396111.45	3678+65.48	86.96	BOC
ADP277	444191.23	1396110.76	3678+58.33	86.44	TAP
ADP278	444186.83	1396111.95	3678+53.96	87.73	BOC
ADP279	444197.91	1396113.39	3678+64.81	88.92	BOC
ADP280	444191.40	1396112.79	3678+58.56	88.46	TAP
ADP281	444186.98	1396113.98	3678+54.16	89.76	BOC
ADP282	444196.01	1396119.24	3678+63.04	94.81	BOC
ADP283	444191.92	1396118.86	3678+58.94	94.52	TAP
ADP284	444187.43	1396120.07	3678+54.77	95.84	BOC
ADP285	444195.46	1396121.20	3678+62.53	96.78	BOC
ADP286	444192.09	1396120.89	3678+59.16	96.54	TAP
ADP287	444187.58	1396122.10	3678+54.97	97.86	BOC
ADP288	444188.84	1396139.08	3678+56.65	114.80	BOC
ADP289	444192.18	1396155.65	3678+60.01	131.29	BOC
ADP290	444189.30	1396160.52	3678+57.65	136.23	BOC
ADP291	444187.94	1396203.13	3678+57.36	178.86	BOC
ADP292	444193.31	1396236.65	3678+62.92	212.25	BOC
ADP293	444191.40	1396261.03	3678+61.55	236.66	BOC
ADP294	444187.83	1396260.82	3678+58.66	236.53	BOC
ADP295	444192.82	1396266.12	3678+63.08	241.72	CONC
ADP296	444185.82	1396265.71	3678+56.80	241.47	CONC
ADP505	444203.97	1396100.78	3678+70.59	76.17	GUT

ABBREVIATION GUIDE

ASPHALT EDGE	= ASP
GRAVEL EDGE	= GRV
TOPSOIL EDGE	= TSE
BACK OF CURB	= BOC
CENTER RADIUS	= CEN RAD
BLISTER	= BLSTR
CONCRETE EDGE	= CONC
TAPER EDGE	= TAP
GUTTER	= GUT

Survey Data Layout

ND 22 and 8th St S Intersection

Sta 69+00 to Sta 73+00

REGISTERED PROFESSIONAL ENGINEER
DAWN L.S. MICHEL
PE-8029
DATE 2025.12.18 09:06:44 -06'00'
NORTH DAKOTA

Plot Date: 12/15/2025, 11:51am
Drawing name: U:\193806164\Design\CAD\PLANSHEETS\193806164-L100.dwg
Xrefs: Design_PCN23691, RW_Bndry_PCN23695, 193806164-XNF-ND22&8th-Trees, DS_Align_Ports_ND22-8th, Control Design - ND22, 193806164-XBRD Design_PCN23695, PCN23695_Aerial, Topog, PCN23695_Ties, PCN23691_Aerial, 193806164-XBRD, DS_Align, DS_Align_Ports, 193806164-XNF-Corridor, 193806164-XNF-ND22&8th, 193806165-XSNF-R4&23rd, Design_PCN23695, 193806164-XVPRT, 193806164-XBRD

STATE	PROJECT NO.	SECTION NO.	SHEET NO.
ND	HEN-5-022(144)069	85	1

LEGEND

PLANT SCHEDULE

SYMBOL	CODE	QTY	BOTANICAL / COMMON NAME
DECIDUOUS SHADE TREES			
	TC	3	TILIA CORDATA 'GREENSPIRE' GREENSPIRE LINDEN
ORNAMENTAL TREES			
	AG	5	AMELANCHIER X GRANDIFLORA 'AUTUMN BRILLIANCE' AUTUMN BRILLIANCE APPLE SERVICEBERRY

TREE PLANTING

ND 22 and 8th St S Intersection

LICENSED LANDSCAPE ARCHITECT
RACHEL J. BURAND
(160)
Rachel Burand
DATE 12/15/2025
STATE OF NORTH DAKOTA

Plot Date: 12/15/2025 , 11:51am
Drawing name: U:\193806164\Design\CAD\PLANSHEETS\ 193806164-L100.dwg
Xrefs: Design_PCN23691, RW_Bndry_PCN23691, RW_Bndry_PCN23695, 193806164-XVPRT, 193806164-XSNF-Corridor, 193806164-XSNF-ND22&8th, 193806165-XSNF-P4&23rd, Design_PCN26395, PCN23695_Aerial, Topog_PCN23695_Tiles, PCN23691_Aerial, 193806164-XBRD, D5_Align, D5_Align_Plans, 193806164-XBRD, D5_Align, D5_Align_Plans, ND22-8th_Control, Design - ND22, 193806164-XBRD

STATE	PROJECT NO.	SECTION NO.	SHEET NO.
ND	HEN-5-022(144)069	85	2

CORRIDOR LANDSCAPE PLANT SCHEDULE

PLANT SCHEDULE

SYMBOL	CODE	QTY	BOTANICAL NAME	COMMON NAME	CONT	REMARKS
DECIDUOUS SHADE TREES						
	TC	3	TILIA CORDATA 'GREENSPIRE'	GREENSPIRE LINDEN	2.5" B&B	MATURE HEIGHT: 50' MATURE SPREAD: 35'
ORNAMENTAL TREES						
	AG	5	AMELANCHIER X GRANDIFLORA 'AUTUMN BRILLIANCE'	AUTUMN BRILLIANCE APPLE SERVICEBERRY	1.5" B&B	MATURE HEIGHT: 25' MATURE SPREAD: 18'

NOTE:
Include all costs for materials, maintenance, warranty, watering, supplemental water bags, wood mulch, tree guy/anchoring/staking systems and other items necessary for completion of the tree plantings in the bid price for **970-1000 TREES (EA).**

QUANTITIES:

SPEC	CODE	BID ITEM	QTY	UNIT
970	1000	Trees	8	EA

PLANT SCHEDULE

ND 22 and 8th St S Intersection

Plot Date: 12/15/2025 - 11:51am
Drawing name: U:\193806164\Design\CAD\PLANSHEETS\193806164-L100.dwg
Xrefs: Design_PCN23691, RW_Bndry_PCN23691, RW_Bndry_PCN23695, 193806164-XVPRT, 193806164-XSNF-Corridor, 193806164-XSNF-ND22&8th, 193806165-XSNF-P&&23rd, Design_PCN23695, PCN23695_Aerial, Topog, PCN23695_Tiles, PCN23691_Aerial, 193806164-XBRD, D5_Align, D5_Align, Ports, 193806164-XSNH-ND22&8th-Trees, D5_Align, Ports, ND22-sh, Control, Design - ND22, 193806164-XBRD

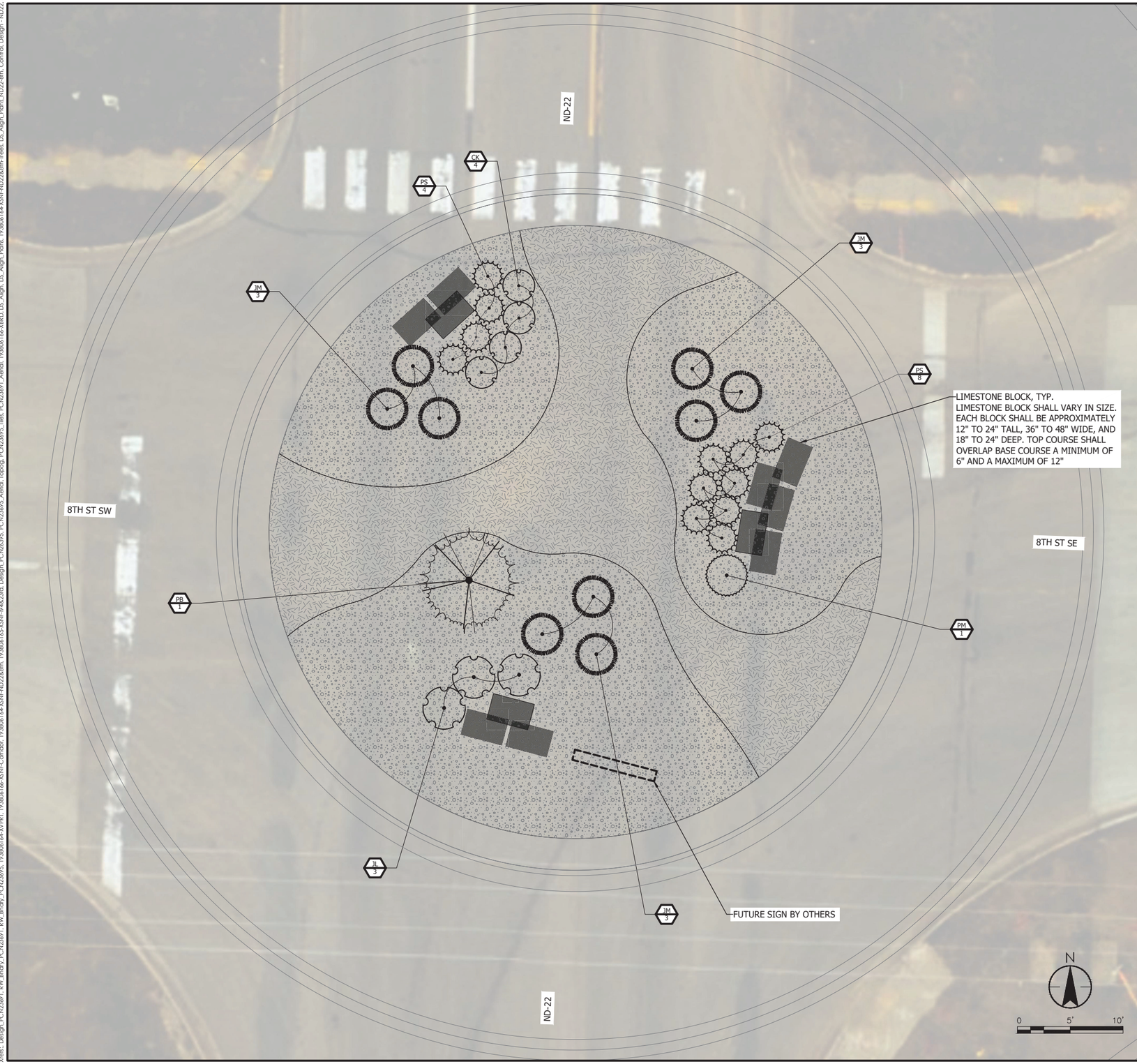

STATE	PROJECT NO.	SECTION NO.	SHEET NO.
ND	HEN-5-022(144)069	85	3

LEGEND

PLANT SCHEDULE

SYMBOL	CODE	QTY	BOTANICAL / COMMON NAME
CONIFEROUS TREES			
	JM	9	JUNIPERUS SCOPULORUM 'MEDORA' MEDORA JUNIPER
	PB	1	PICEA PUNGENS 'BABY BLUE' BABY BLUE COLORADO SPRUCE
EVERGREEN SHRUBS			
	JL	3	JUNIPERUS HORIZONTALIS 'LIMEGLOW' LIMEGLOW CREEPING JUNIPER
	PM	1	PINUS MUGO 'SLOWMOUND' SLOWMOUND MUGO PINE
GRASSES			
	CK	4	CALAMAGROSTIS X ACUTIFLORA 'KARL FOERSTER' KARL FOERSTER FEATHER REED GRASS
	PS	12	PANICUM VIRGATUM 'SHENANDOAH' SHENANDOAH SWITCH GRASS
GROUND COVERS			
	LR	803 SF	LIMESTONE ROCK MULCH
	WR	1,838 SF	WASHED RIVER ROCK MULCH
		166 LF	STEEL EDGING
		11	LIMESTONE BLOCK

LANDSCAPE PLAN

ND 22 and 8th St S Intersection

LICENSED LANDSCAPE ARCHITECT
RACHEL J. BURAND
(160)
Rachel Burand
DATE 12/15/2025
STATE OF NORTH DAKOTA

Xrefs: Design_PCN23691, RW_Bndry_PCN23691, RW_Bndry_PCN23695, 193806164-XVPRT, 193806166-XSNF-Corridor, 193806164-XSNF-ND22&8th, 193806165-XSNF-P4&23rd, Design_PCN26395, PCN23695_Aerial, Topog_PCN23695_Tiles, PCN23691_Aerial, 193806166-XBRD, DS_Align, DS_Align, PGns, 193806164-XSNF-ND22&8th-Trees, DS_Align, Plan1, ND22-8th, Control, Design - ND22, 193806164-XBRD
Plot Date: 12/15/2025 , 11:51am
Drawing name: U:\193806164\Design\CAD\PLANSHEETS\193806164-L100.dwg

ND-22 & 8TH ST ROUNDABOUT PLANT SCHEDULE

PLANT SCHEDULE

SYMBOL	CODE	QTY	BOTANICAL NAME	COMMON NAME	CONT	REMARKS
CONIFEROUS TREES						
	JM	9	JUNIPERUS SCOPULORUM 'MEDORA'	MEDORA JUNIPER	4`-5` HT	6 - 10FT. HT. 1 - 3FT. W.
	PB	1	PICEA PUNGENS 'BABY BLUE'	BABY BLUE COLORADO SPRUCE	4`-5` HT	40 - 65FT. HT. 15 - 25FT. W.
EVERGREEN SHRUBS						
	JL	3	JUNIPERUS HORIZONTALIS 'LIMEGLOW'	LIMEGLOW CREEPING JUNIPER	#5 CONT.	6 - 18IN. HT. 3 - 6FT. W.
	PM	1	PINUS MUGO 'SLOWMOUND'	SLOWMOUND MUGO PINE	#5 CONT.	18 - 36IN. HT. 1 - 6FT. W.
GRASSES						
	CK	4	CALAMAGROSTIS X ACUTIFLORA 'KARL FOERSTER'	KARL FOERSTER FEATHER REED GRASS	#3 CONT.	3 - 6FT. HT. 1- 3FT. W
	PS	12	PANICUM VIRGATUM 'SHENANDOAH'	SHENANDOAH SWITCH GRASS	#1 CONT.	
GROUND COVERS						
	LR	803 SF	LIMESTONE ROCK MULCH	LIMESTONE ROCK MULCH	MULCH	3" Depth
	WR	1,838 SF	WASHED RIVER ROCK MULCH	WASHED RIVER ROCK MULCH	MULCH	12" Depth
		166 LF	STEEL EDGING			4" Height
		11	LIMESTONE BLOCK			

NOTE:
Include all costs for materials, maintenance, warranty, watering, supplemental water bags, mulch, tree guy/anchoring/staking systems, other items necessary for completion of the plantings**,** and all remaining landscaping features in the roundabout center island as listed above and shown in plans in the bid price for **970-1011 LANDSCAPING PLANTINGS (LUMP SUM).**

QUANTITIES:

SPEC	CODE	BID ITEM	QTY	UNIT
970	1011	Landscaping Plantings	1	LSUM

STATE	PROJECT NO.	SECTION NO.	SHEET NO.
ND	HEN-5-022(144)069	85	4

PLANT SCHEDULE - ND-22 & 8TH ST ROUNDABOUT

LICENSED LANDSCAPE ARCHITECT
RACHEL J. BURAND
(160)
Rachel Burand
DATE 12/15/2025
STATE OF NORTH DAKOTA

STATE	PROJECT NO.	SECTION NO.	SHEET NO.
ND	HEN-5-022(144)069	85	5

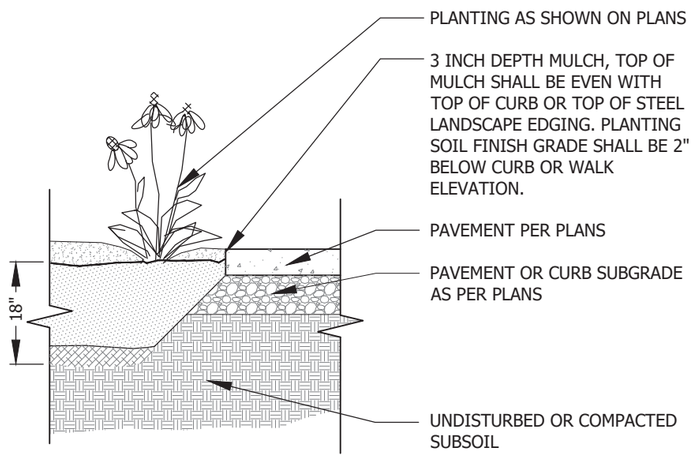

1/5 TYPICAL PERENNIAL PLANTING DETAIL
NOT TO SCALE

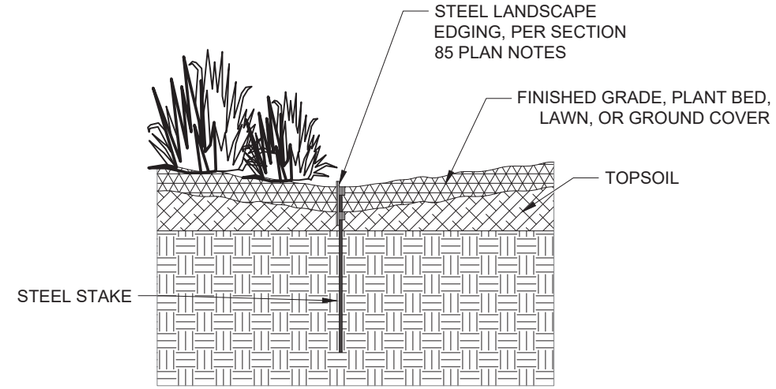

NOTES:
1. INSTALLATION TO BE COMPLETED IN ACCORDANCE WITH MANUFACTURER'S INSTRUCTIONS.

2/5 STEEL EDGING DETAIL
NOT TO SCALE

STAKING SHALL BE AS DIRECTED BY THE ENGINEER, IF THE TREE WILL NOT BE ABLE TO SUPPORT ITSELF.

STAKE TREES IF THE FOLLOWING CONDITIONS ARE PRESENT:
- TREES LOCATED IN VERY SANDY SOIL OR VERY WET CLAY SOIL.
- TREES LOCATED IN A PLACE OF EXTREMELY WINDY CONDITIONS.
-TREES IN LOCATIONS AFFECTED BY SNOW ICE SLIDES FROM DOME.

TIGHTEN WIRE OR CABLE ONLY ENOUGH TO KEEP FROM SLIPPING. ALLOW FOR SOME TRUNK MOVEMENT. WEBBING SHALL BE LONG ENOUGH TO ACCOMMODATE 1.5 IN. OF GROWTH AND BUFFER ALL BRANCHES FROM THE WIRE.

TUCK ANY LOOSE ENDS OF THE WIRE OR CABLE INTO THE WIRE WRAP SO THAT NO SHARP WIRE ENDS ARE EXPOSED.

ASSURE THAT THE BEARING SURFACE OF THE WEBBING AGAINST THE TREE TRUNK IS A MINIMUM OF 3 IN. WIDE.

REMOVE ALL STAKING AS SOON AS THE TREE HAS GROWN SUFFICIENT ROOTS TO OVERCOME THE PROBLEM THAT REQUIRED THE TREE TO BE STAKED. STAKES SHALL BE REMOVED NO LATER THE END OF THE FIRST FULL GROWING SEASON AFTER PLANTING.

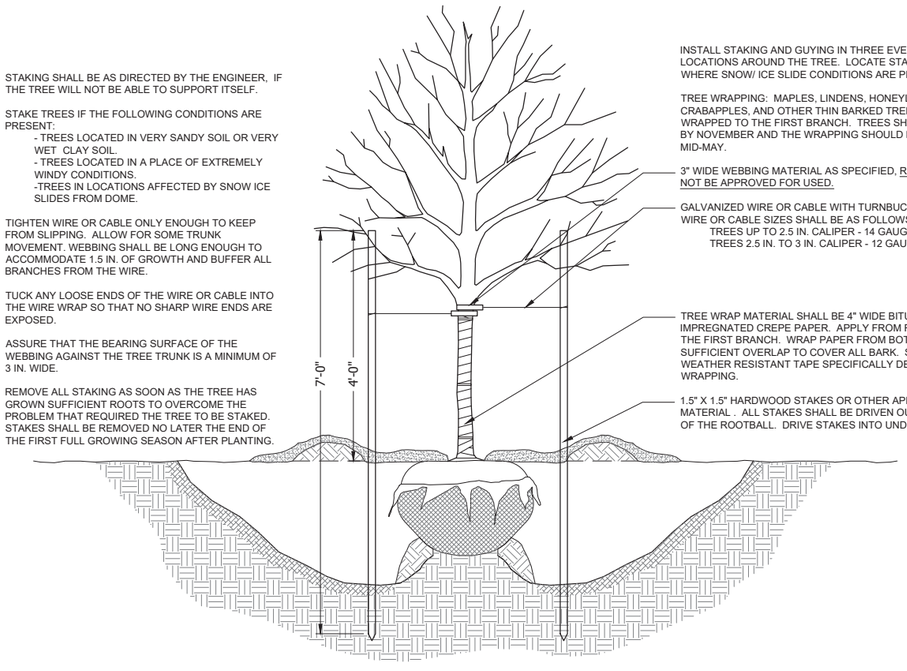

INSTALL STAKING AND GUYING IN THREE EVENLY SPACED LOCATIONS AROUND THE TREE. LOCATE STAKES AS DIRECTED WHERE SNOW/ ICE SLIDE CONDITIONS ARE PRESENT.

TREE WRAPPING: MAPLES, LINDENS, HONEYLOCUST, CRABAPPLES, AND OTHER THIN BARKED TREES NEED TO BE WRAPPED TO THE FIRST BRANCH. TREES SHOULD BE WRAPPED BY NOVEMBER AND THE WRAPPING SHOULD BE REMOVED BY MID-MAY.

3" WIDE WEBBING MATERIAL AS SPECIFIED, RUBBERHOSE SHALL NOT BE APPROVED FOR USED.

GALVANIZED WIRE OR CABLE WITH TURNBUCKLES TO TIGHTEN. WIRE OR CABLE SIZES SHALL BE AS FOLLOWS:
TREES UP TO 2.5 IN. CALIPER - 14 GAUGE
TREES 2.5 IN. TO 3 IN. CALIPER - 12 GAUGE

TREE WRAP MATERIAL SHALL BE 4" WIDE BITUMINOUS IMPREGNATED CREPE PAPER. APPLY FROM ROOT FLARE TO THE FIRST BRANCH. WRAP PAPER FROM BOTTOM UP WITH SUFFICIENT OVERLAP TO COVER ALL BARK. SECURE WITH WEATHER RESISTANT TAPE SPECIFICALLY DESIGNED FOR TREE WRAPPING.

1.5" X 1.5" HARDWOOD STAKES OR OTHER APPROVED STAKE MATERIAL . ALL STAKES SHALL BE DRIVEN OUTSIDE THE EDGE OF THE ROOTBALL. DRIVE STAKES INTO UNDISTURBED SOIL.

3/5 TREE STAKING GUYING AND WRAPPING
NOT TO SCALE

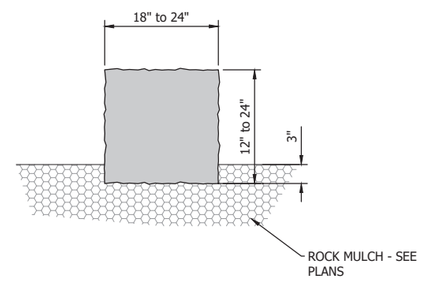

4/5 LIMESTONE BLOCK
NOT TO SCALE

LANDSCAPE DETAILS

ND 22 and 8St S Intersection

LICENSED LANDSCAPE ARCHITECT
RACHEL J. BURAND
(160)
Rachel Burand
DATE 12/15/2025
STATE OF NORTH DAKOTA

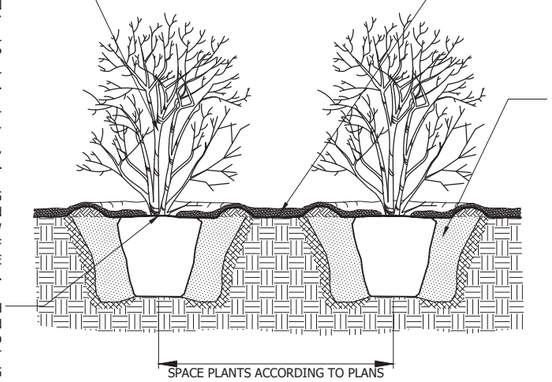

IF PLANT IS SHIPPED WITH A CONTAINER AROUND THE ROOTBALL, SLICE SIDES OF CONTAINER AND REMOVE COMPLETELY. USE FINGERS OR SMALL HAND TOOLS TO PULL ROOTS OUT OF THE OUTER LAYER OF POTTING SOIL, THEN CUT OR PULL APART ANY CIRCLING ROOTS. REMOVE ALL ROPE, TWINE AND BURLAP FROM TOP HALF OF ROOT BALL FROM B&B SHRUBS.

DO NOT HEAVILY PRUNE AT PLANTING. PRUNE ONLY BROKEN OR DEAD BRANCHES, RETAINING NATURAL FORM.

DURING THE SPRING PLANTING SEASON, ANY EVERGREEN SHRUB DELIVERED WITH NEW GROWTH IN ADVANCE STAGE OF CANDLING OUT WILL BE REJECTED.

SET TOP OF ROOT BALL FLUSH TO GRADE OR 1-2 IN. HIGHER IN SLOWLY DRAINING SOILS. ADD MYCORRHIZAL TRANSPLANT INNOCULANT AT PLANTING TIME PER MANUFACTURER'S DIRECTIONS.

MULCH AS SPECIFIED. DO NOT PLACE MULCH IN CONTACT WITH THE PLANT. MAINTAIN THE MULCH WEED-FREE FOR THE DURATION OF THE WARRANTY PERIOD. PLACE MULCH WITHIN 48 HOURS OF SECOND WATERING.

DIG HOLE 3x ROOT BALL DIA. SCARIFY THE SIDES AND BOTTOM OF THE HOLE BEFORE PLACING THE SHRUB IN THE PLANTING HOLE. BACKFILL WITH MODIFIED PLANTING SOIL AND ADD ANY SOIL AMENDMENTS OR FERTILIZERS AS SPECIFIED AND CONSTRUCT 3" HIGH EARTH SAUCER BEYOND EDGE OF ROOT BALL. WATER THOROUGHLY WITHIN 2 HOURS.

1 / 6 SHRUB PLANTING
NOT TO SCALE

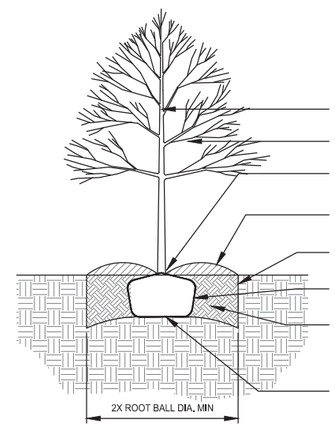

SPECIES AS SHOWN ON PLAN

PRUNE ANY DAMAGED OR BROKEN BRANCHES. DO NOT CUT LEADER.

ROOT FLARE MUST BE ABOVE FINISHED GRADE. DO NOT COVER ROOT FLARE WITH MULCH

DOUBLE SHRED, HARD WOOD MULCH (4") MIN.

ROUGH THE SIDES OF THE HOLE SO THEY ARE NOT GLAZED FROM DIGGING.

LOOSEN SIDES OF ROOT BALL AND PRUNE DAMAGED, DESICCATED, OR GIRDLING ROOTS.

BACKFILL AROUND THE ROOT BALL WITH LOOSE SOIL. WORK SOIL TO SETTLE AND ELIMINATE VOIDS AND AIR POCKETS. WATER THOROUGHLY WHEN BACKFILLED 2/3 FULL AND ALLOW TO SETTLE.

SET ROOT BALL ON SOIL BACKFILL SO THAT TOP OF ROOT BALL IS ABOVE FINISHED GRADE.

2 / 6 DECIDUOUS TREE PLANTING
NOT TO SCALE

DO NOT HEAVILY PRUNE THE TREE AT PLANTING. PRUNE ONLY CROSSOVER LIMBS, CO-DOMINANT LEADERS AND BROKEN OR DEAD BRANCHES, SOME INTERIOR TWIGS AND LATERAL BRANCHES MAY BE PRUNED; HOWEVER DO NOT REMOVE THE TERMINAL BUDS OF BRANCHES THAT EXTEND TO THE EDGE OF THE CROWN.

DURING THE SPRING PLANTING SEASON, ANY EVERGREEN PLANT DELIVERED WITH NEW GROWTH IN ADVANCE STAGE OF CANDLING OUT WILL BE REJECTED. EVERGREEN TREES NOT FULLY BRANCHED FROM BOTTOM TO TOP WILL BE REJECTED AND THOSE WITH TERMINAL LEADERS EXCEEDING 300 MM (12") IN LENGTH WILL ALSO BE REJECTED

STAKE TREES ONLY AS SPECIFIED AT THE DIRECTION OF LANDSCAPE ARCHITECT

WRAP TREE TRUNKS ONLY AS SPECIFIED AT THE DIRECTION OF LANDSCAPE ARCHITECT.

MARK THE NORTH SIDE OF THE TREE IN THE NURSERY, AND ROTATE TREE TO FACE NORTH IN THE FIELD

SET TOP OF ROOT BALL FLUSH TO GRADE OR ~~1-2~~ IN. HIGHER IN SLOWLY DRAINING SOILS.

MYCORRHIZAL TRANSPLANT INOCULANT TO BE ADDED AT PLANTING TIME PER MANUFACTURER'S DIRECTIONS.

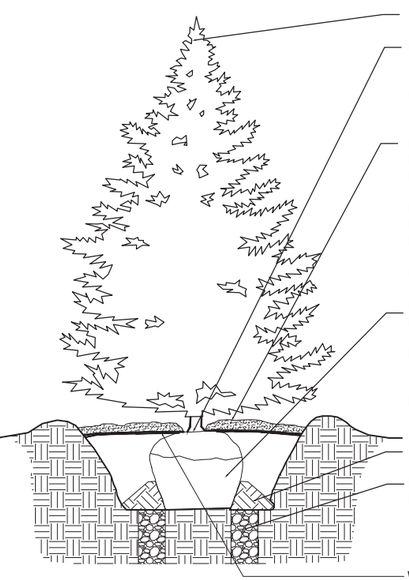

SET TREE PLUMB AND MAINTAIN THROUGHOUT WARRANTY PERIOD.

EACH TREE MUST BE PLANTED SUCH THAT THE ROOT FLARE IS VISIBLE AT THE TOP OF THE ROOT BALL. TREES WHERE THE ROOT FLARE IS NOT VISIBLE SHALL BE REJECTED. DO NOT COVER THE TOP OF THE ROOT BALL WITH SOIL. ROOT BALLS DELIVERED WITH THE ROOT FLARE MORE THAN 4" BELOW THE TOP OF THE BALL WILL BE REJECTED. SEE THE ROOT FLARE DIAGRAM

MULCH AS SPECIFIED, DO NOT PLACE MULCH IN CONTACT WITH TREE TRUNK, MAINTAIN THE MULCH WEED-FREE FOR A MINIMUM OF THREE YEARS AFTER PLANTING. PLACE MULCH WITHIN 48 HOURS OF SECOND WATERING.

DIG HOLE 2x ROOT BALL DIA. SCARIFY THE SIDES AND BOTTOM OF THE HOLE BEFORE PLACING THE TREE IN THE PLANTING HOLE. BACKFILL WITH MODIFIED PLANTING SOIL AS SPECIFIED AND CONSTRUCT 4" HIGH EARTH SAUCER BEYOND EDGE OF ROOT BALL. WATER THOROUGHLY WITHIN 2 HOURS.

REMOVE ALL TWINE, ROPE AND WIRE, AND BURLAP FROM TOP HALF OF ROOT BALL. REMOVE ALL PLASTIC WRAP OR ROPE FROM ENTIRE BALL.

IF PLANT IS SHIPPED WITH A WIRE BASKET AROUND THE ROOT BALL, CUT THE WIRE BASKET IN FOUR PLACES AND FOLD DOWN INTO PLANTING HOLE.

PLACE ROOT BALL ON UNEXCAVATED OR TAMPED SOIL.

TAMP SOIL AROUND ROOT BALL BASE FIRMLY WITH FOOT PRESSURE SO THAT ROOT BALL DOES NOT SHIFT.

PROVIDE GRAVEL FILLED DRY WELL FOR POORLY DRAINED SOILS AS DIRECTED BY THE LANDSCAPE ARCHITECT.

WEED BARRIER AS SPECIFIED.

3 / 6 EVERGREEN TREE PLANTING
NOT TO SCALE

STATE	PROJECT NO.	SECTION NO.	SHEET NO.
ND	HEN-5-022(144)069	85	6

LANDSCAPE DETAILS

ND 22 and 8St S Intersection

LICENSED LANDSCAPE ARCHITECT
RACHEL J. BURAND
(160)
Rachel Burand
DATE 12/15/2025
STATE OF NORTH DAKOTA

Plot Date: 12/15/2025 - 11:52am
Drawing name: U:\193806164\Design\CAD\PLANSHEETS\193806164-L1100.dwg
Xrefs: Design_PCN23691, RW_Bridy_PCN23695, 193806164-XVPRT, 193806166-XSNF-Corridor, 193806164-XSNF-ND22&8th, 193806165-XSNF-9A&23rd, Design_PCN23695, PCN23695, PCN23695_Aerial, Topog, PCN23695_Tiles, PCN23691_Aerial, 193806166-XBRD, DS_Align, DS_Align, Plans, 193806164-XSNF-ND22&8th-Trees, DS_Align_Plans, ND22&8th, Control, Design - ND22, 193806164-XBRD

NOTES

970-P01 LANDSCAPING – APPLIES TO ALL TREES

1. Include all costs for materials, maintenance, warranty, watering, supplemental water bags, wood mulch, tree guy anchoring/staking systems and other items necessary for completion of the tree plantings in the price bid for “Trees”.

   Provide plant material meeting the minimum requirements of size and grade in the latest edition of American Standard for Nursery Stock, ANSI Z60.1. Install in a manner consistent with this document along with details included in plans.

   All plants will be true to name and tagged legibly in accordance with nursery standards of practice as recommended by the American Association of Nurserymen. All plants previously approved which begin showing characteristics not true to labeled name during warranty period will be replaced at no cost to the Owner.

2. Notify the Engineer, City of Dickinson Forestry Department (701) 260-4287, for a pre-planting inspection of all trees a minimum of 1 week prior to installation.

3. Extend plant establishment period for a period of 1 year commencing on date of acceptance by Engineer/City Forester.

4. Properly care for all trees from the time of planting until the contract plant establishment period expires. Proper care consists of supplemental watering, weeding, pruning, spraying, tightening of braces and guys, retying wrapping, re-mulching and other work as necessary to keep the trees in a neat appearance and in a healthy growing condition.

   Perform complete watering(s) at 5 to 7-day intervals, which may be adjusted when weather conditions and soil moisture permit. Additional watering may be ordered by the Engineer at any time during the plant establishment period should conditions require such watering. Furnish and install a 15-gallon slow-release supplemental water bag for each tree planted.

   Supplemental water bags will become the property of the City of Dickinson following acceptance of trees. The City of Dickinson will remove all supplemental water bags after the growing season and will remove and dispose of all bracing and guying materials.

5. Mulch all trees as detailed and specified within 24 hours of installation. Furnish and install shredded wood mulch at a 3-inch depth and 6-foot diameter at the base of all trees as shown in the details. Provide finely shredded hardwood bark mulch. Provide fibrous mulch, uniformly dark brown in color, free of large wood chunks, and substantially free of mold, dirt, sawdust, and foreign material.

   Mulch containing any of the following will be rejected:
   - Green or freshly chipped or shredded mulch
   - Mulch in an advanced state of decomposition
   - Chipped up manufactured boards or chemically treated wood, including but not limited to wafer board, particle board, and chromated copper arsenate (CCA) or penta-treated wood

6. Planting: Remove topsoil and subsoil excavated in each planting hole and backfill all tree pits with native soil excavated from tree pit. Install trees so top of root ball is level with top of finished grade as shown in the details. The soil excavated from the planting pits shall be used for backfilling. Trees that are installed too deep or too shallow will not be accepted.

7. Water all trees within 2 hours of being planted to thoroughly saturate backfill and eliminate voids.

8. Stake trees in accordance with details within 24 hours of installation. Stakes should be applied to allow the trunk to move 2 inches in each direction.

9. Place a sufficient amount of water in each supplemental water bag at the time of each watering to keep plants in a moist condition, and to keep the plant in a healthy growing condition.

10. Replace all trees that die, show evidence of dying, or disease, during the plant establishment period at the earliest appropriate planting time after this condition becomes apparent. Replacements are to be of the same size and species as originally specified.

11. Near the end of the applicable plant establishment period an inspection of the trees will be made and only those found to be in a healthy growing condition will be accepted. Those trees not in a healthy growing condition will be removed and replaced by the Contractor at the Contractor's expense, including materials and labor. Replacements are to be of the same size and species as originally specified.

12. Do not install plant material when ambient temperatures may drop below 35 degrees F or rise above 90 degrees F. Do not install plant material when wind velocity exceeds 30 mph. Acceptable planting dates are as follows:

    Spring: April 15 – June 15
    Fall: September 15 – October 15
    Favorable weather conditions between June 15 – September 15, upon written approval by Engineer

13. Payment for trees will be made at the following intervals. Fifty percent (50%) will be distributed after initial planting, and fifty percent (50%) upon acceptance of proper plant care maintenance and final acceptance. Keep detailed records of maintenance activities and notify the Project Engineer 24 hours in advance of maintenance activities to receive full payment for each period. Submit maintenance records to the Project Engineer prior to the partial payment dates listed above to receive payment.

LANDSCAPE NOTES

ND 22 and 8St S Intersection

LICENSED LANDSCAPE ARCHITECT
RACHEL J. BURAND
(160)
Rachel Burand
DATE 12/15/2025
STATE OF NORTH DAKOTA

NOTES

970-P03 LANDSCAPING PLANTINGS – APPLIES TO ROUNDABOUT CENTER ISLAND

1. Include all materials, labor, and equipment necessary to provide, install, and maintain landscaping features in the roundabout center island as described in this note and as shown in section plans in the bid price for “Landscaping Plantings.”

2. For trees planted within the roundabout center island, see note 970-P01 LANDSCAPING – APPLIES TO ALL TREES. Include all costs for trees within the roundabout in the price bid for "Landscaping Plantings."

3. Furnish and install topsoil within plant bed to a minimum depth of 24-inches.

4. Furnish and install weed control landscape fabric prior to installation of stone mulch. Fabric will be non-biodegradable, non-woven, chemically inert and resistant to fertilizers and soil chemicals. Fabric will be a rot-proof synthetic material and will contain inhibitors to make the fabric resistant to heat and ultraviolet exposure. It will be dimensionally stable so that fibers maintain their positions with respect to each other. It will be water permeable and will be free from any chemical treatment or coating that might significantly affect its physical properties. Suitable fabrics include Mirascape, Weed-check or Supac 5NP.

5. Furnish and install stone mulch as indicated in landscape plans. Provide stone mulch that is:

   - a mixture of individual stones ranging in average size from 1” to 3”, such that 100 percent of mulch shall be within this size range.
   - durable field or quarry stone that is sound, hard, dense, resistant to the action of air and water, and free of seams, cracks, or other structural defects.
   - stone pieces with the length and width no more than twice the thickness.

6. Furnish and install boulders as indicated in landscape plans. Provide photographs and rough dimensions including length, width, and height for review and approval by Engineer prior to installation.

LANDSCAPE NOTES

ND 22 and 8St S Intersection

LICENSED LANDSCAPE ARCHITECT
RACHEL J. BURAND
(160)
Rachel Burand
DATE 12/15/2025
STATE OF NORTH DAKOTA

STATE	PROJECT NO.	SECTION NO.	SHEET NO.
ND	HEN-5-022(144)069	90	1

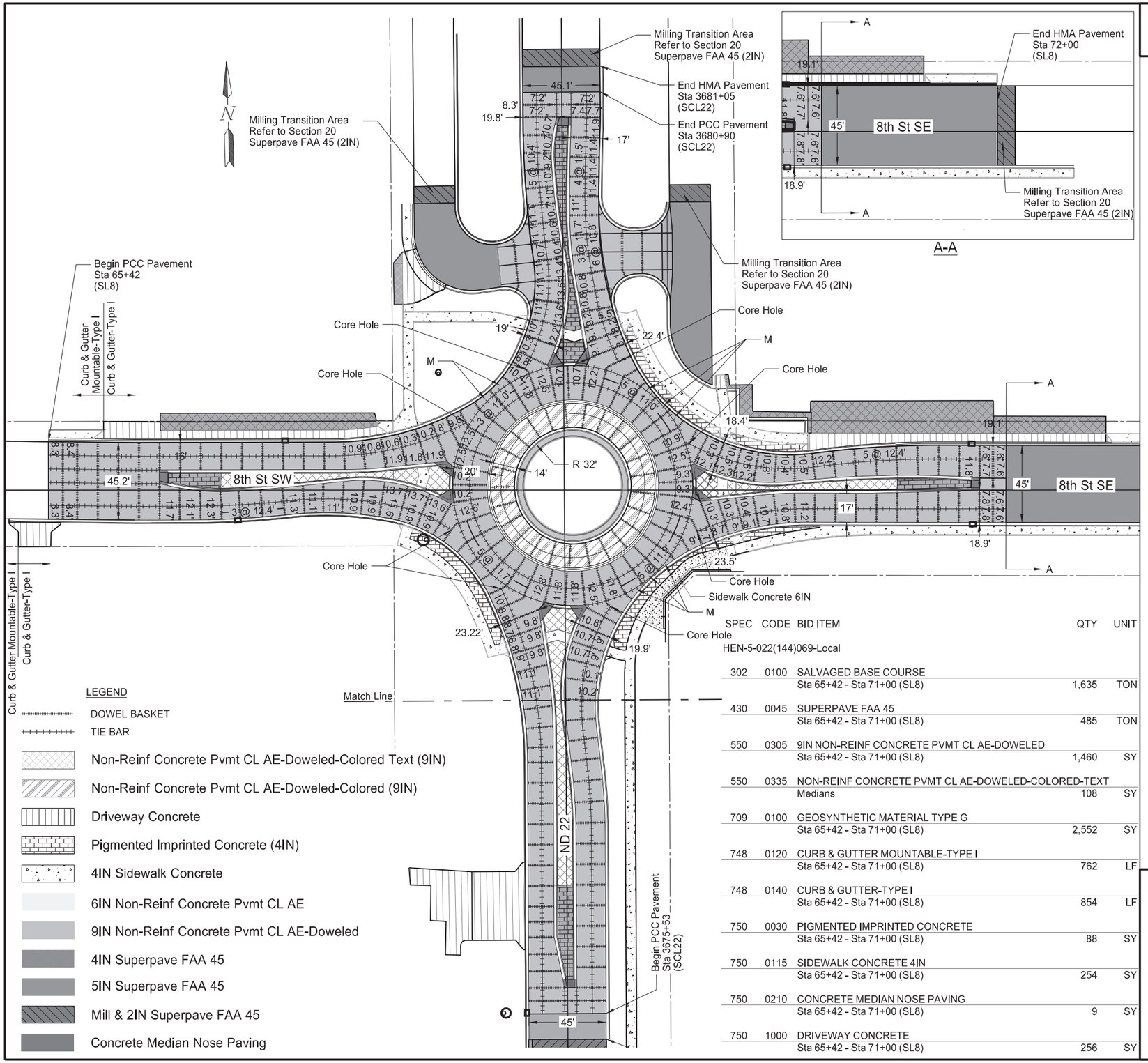

SPEC	CODE	BID ITEM	QTY	UNIT
HEN-5-022(144)069-Local				
302	0100	SALVAGED BASE COURSE Sta 65+42 - Sta 71+00 (SL8)	1,635	TON
430	0045	SUPERPAVE FAA 45 Sta 65+42 - Sta 71+00 (SL8)	485	TON
550	0305	9IN NON-REINF CONCRETE PVMT CL AE-DOWELED Sta 65+42 - Sta 71+00 (SL8)	1,460	SY
550	0335	NON-REINF CONCRETE PVMT CL AE-DOWELED-COLORED-TEXT Medians	108	SY
709	0100	GEOSYNTHETIC MATERIAL TYPE G Sta 65+42 - Sta 71+00 (SL8)	2,552	SY
748	0120	CURB & GUTTER MOUNTABLE-TYPE I Sta 65+42 - Sta 71+00 (SL8)	762	LF
748	0140	CURB & GUTTER-TYPE I Sta 65+42 - Sta 71+00 (SL8)	854	LF
750	0030	PIGMENTED IMPRINTED CONCRETE Sta 65+42 - Sta 71+00 (SL8)	88	SY
750	0115	SIDEWALK CONCRETE 4IN Sta 65+42 - Sta 71+00 (SL8)	254	SY
750	0210	CONCRETE MEDIAN NOSE PAVING Sta 65+42 - Sta 71+00 (SL8)	9	SY
750	1000	DRIVEWAY CONCRETE Sta 65+42 - Sta 71+00 (SL8)	256	SY

SPEC	CODE	BID ITEM	QTY	UNIT
HEN-5-022(144)069				
302	0100	SALVAGED BASE COURSE Sta 65+42 - Sta 71+00 (SL8)	2,225	TON
430	0045	SUPERPAVE FAA 45 Sta 65+42 - Sta 71+00 (SL8)	321	TON
550	0105	6IN NON-REINF CONCRETE PAVEMENT CL AE Sta 65+42 - Sta 71+00 (SL8)	64	SY
550	0305	9IN NON-REINF CONCRETE PVMT CL AE-DOWELED Sta 65+42 - Sta 71+00 (SL8)	2,439	SY
550	0330	NON-REINF CONCRETE PVMT CL AE-DOWELED-COLORED Roundabout Circle	401	SY
550	0335	NON-REINF CONCRETE PVMT CL AE-DOWELED-COLORED-TEXT Medians	101	SY
709	0100	GEOSYNTHETIC MATERIAL TYPE G Sta 65+42 - Sta 71+00 (SL8)	4,182	SY
748	0120	CURB & GUTTER MOUNTABLE-TYPE I Sta 65+42 - Sta 71+00 (SL8)	974	LF
748	0140	CURB & GUTTER-TYPE I Sta 65+42 - Sta 71+00 (SL8)	1,461	LF
748	1030	VALLEY GUTTER 72IN Rt Frontage Road	28	SY
750	0030	PIGMENTED IMPRINTED CONCRETE Sta 65+42 - Sta 71+00 (SL8)	242	SY
750	0115	SIDEWALK CONCRETE 4IN Sta 65+42 - Sta 71+00 (SL8)	319	SY
750	0140	SIDEWALK CONCRETE 6IN Sta 42+44 - Sta 43+16 (RB_SE_EOP)	60	SY
750	0210	CONCRETE MEDIAN NOSE PAVING Sta 65+42 - Sta 71+00 (SL8)	46	SY
750	1000	DRIVEWAY CONCRETE Sta 65+42 - Sta 71+00 (SL8)	48	SY

Notes:

Core hole to be placed to prevent sympathy cracking. Core 2" hole to be filled with low modulus silicone. Coring and all associated work to be incidental to the 9IN NON REINF CONCRETE PVMT CL AE-DOWELED BID ITEM.

*Joints are spaced at 12' unless otherwise noted.

*Panels denoted "M" shall be poured monolithically with adjacent Curb and Gutter.

Saw cut pigmented imprinted concrete within the splitter islands with panels as follows:
4" thick areas - 5' X 5' Max
9" thick areas - 12' X 12' Max

Paving Layouts

ND 22 & 8th St S Intersection

Sta 63+92 to Sta 69+00

REGISTERED PROFESSIONAL ENGINEER
DALTON DRYBURGH
PE-30116
2025.12.17 10:43:12 -06'00'
NORTH DAKOTA

STATE	PROJECT NO.	SECTION NO.	SHEET NO.
ND	HEN-5-022(144)069	90	2

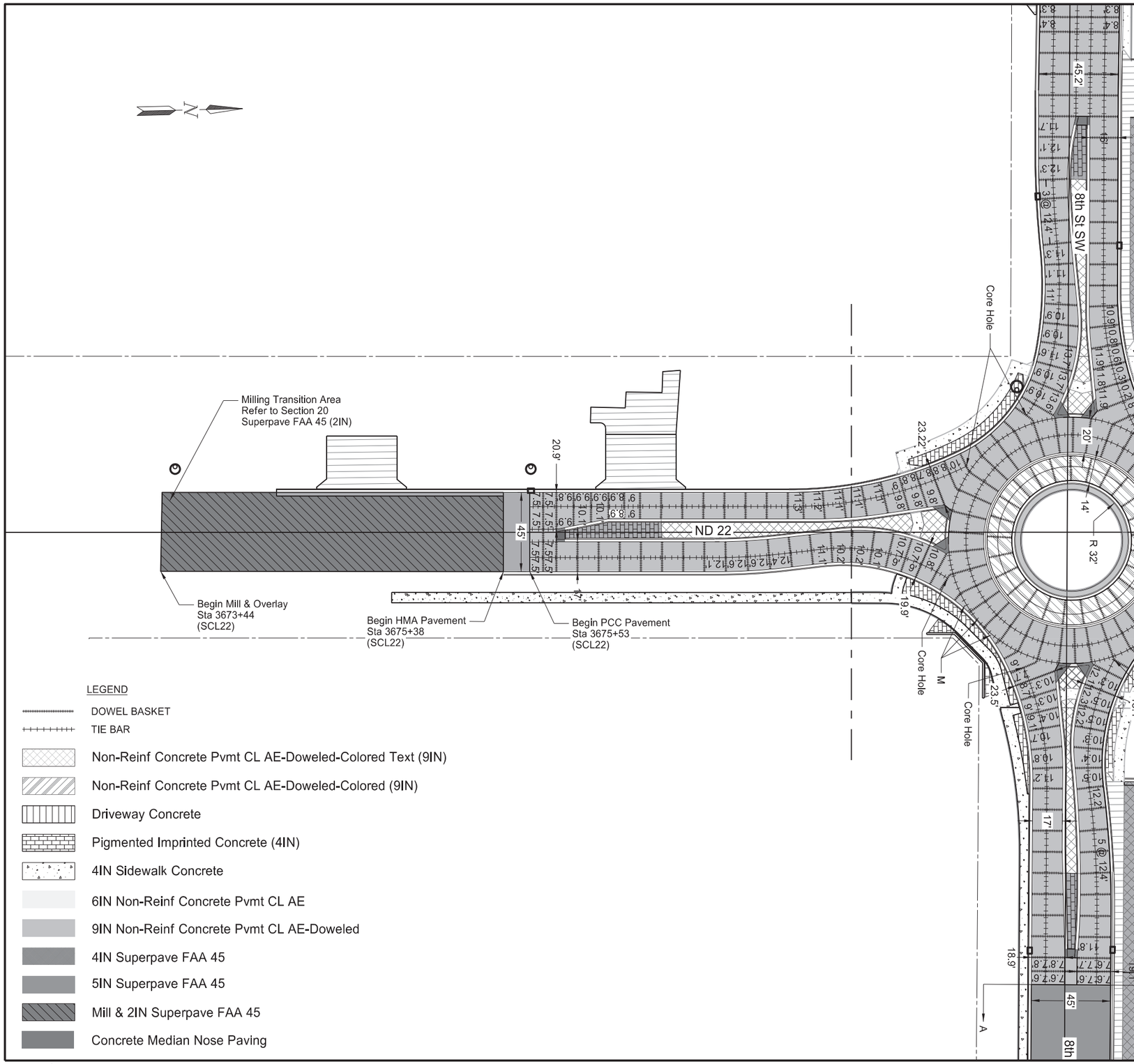

SPEC	CODE	BID ITEM	QTY	UNIT
HEN-5-022(144)069				
302	0100	SALVAGED BASE COURSE Sta 3674+74 - Sta 3677+36 (SCL22)	796	TON
430	0045	SUPERPAVE FAA 45 Sta 3673+44 -Sta 3675+38 (SCL22)	266	TON
550	0305	9IN NON-REINF CONCRETE PVMT CL AE-DOWELED Sta 3674+74 - Sta 3677+36 (SCL22)	685	SY
550	0335	NON-REINF CONCRETE PVMT CL AE-DOWELED-COLORED-TEXT Sta 3674+74 - Sta 3677+36 (SCL22)	86	SY
709	0100	GEOSYNTHETIC MATERIAL TYPE G Sta 3674+74 - Sta 3677+36 (SCL22)	1,102	SY
748	0120	CURB & GUTTER MOUNTABLE-TYPE I Sta 3674+74 - Sta 3677+36 (SCL22)	340	LF
748	0140	CURB & GUTTER-TYPE I Sta 3674+74 - Sta 3677+36 (SCL22)	525	LF
750	0030	PIGMENTED IMPRINTED CONCRETE Sta 3674+74 - Sta 3677+36 (SCL22)	48	SY
750	0115	SIDEWALK CONCRETE 4IN Sta 3674+74 - Sta 3677+36 (SCL22)	174	SY
750	0210	CONCRETE MEDIAN NOSE PAVING Sta 3675+68 - Sta 3675+73 (SCL22)	4	SY
750	1000	DRIVEWAY CONCRETE Lt Approach Sta 3674+32 - Sta 3676+42	395	SY

Notes:

Core hole to be placed to prevent sympathy cracking. Core 2" hole to be filled with low modulus silicone. Coring and all associated work to be incidental to the 9IN NON REINF CONCRETE PVMT CL AE-DOWELED BID ITEM.
*Joints are spaced at 12' unless otherwise noted.
*Panels denoted "M" shall be poured monolithically with adjacent Curb and Gutter.

Saw cut pigmented imprinted concrete within the splitter islands with panels as follows:
4" thick areas - 5' X 5' Max
9" thick areas - 12' X 12' Max

Paving Layouts

ND 22 & 8th St S Intersection

Sta 3673+44 to Sta 3677+36

REGISTERED PROFESSIONAL ENGINEER
DALTON DRYBURGH
PE-30116
DATE 2025.12.17 10:43:24 -06'00'
NORTH DAKOTA

STATE	PROJECT NO.	SECTION NO.	SHEET NO.
ND	HEN-5-022(144)069	100	1

SIGN NUMBER	SIGN SIZE	DESCRIPTION	AMOUNT REQUIRED BY PHASE NO. 1	2	3	4	5	TOTAL AMOUNT REQUIRED	UNITS PER AMOUNT	UNITS SUB TOTAL
E5-1-48	48"x48"	EXIT GORE							35	
G20-1-60	60"x24"	ROAD WORK NEXT __ MILES							28	
G20-1b-60	60"x24"	NO WORK IN PROGRESS (Sign and installation only)							18	
G20-2-48	**48"x24"**	**END ROAD WORK**	**4**	**4**	**4**	**4**	**4**	**4**	**26**	**104**
G20-4-36	36"x18"	PILOT CAR FOLLOW ME (Mounted to back of pilot car)							18	
G20-10-108	108"x48"	CONTRACTOR SIGN							70	
G20-50a-72	72"x36"	ROAD WORK NEXT __ MILES RT & LT ARROWS							43	
G20-52a-72	72"x24"	ROAD WORK NEXT __ MILES RT or LT ARROW							36	
G20-55-96	96"x48"	SPEED LIMIT ENFORCED - MINIMUM FEE $80 WHEN WORKERS PRESENT							59	
G20-55-96	**96"x48"**	**SPEED LIMIT ENFORCED - MINIMUM FEE $150 WHEN WORKERS PRESENT**	**4**	**4**	**4**	**4**	**4**	**4**	**59**	**236**
I2-5-96	96"x48"	YOUR HIGHWAY DOLLARS AT WORK							59	
M1-1-36	36"x36"	INTERSTATE ROUTE MARKER (Post and installation only)							10	
M1-4-24	24"x24"	U.S. ROUTE MARKER (Post and installation only)							10	
M1-5-24	24"x24"	STATE ROUTE MARKER (Post and installation only)							10	
M3-1-24	24"x12"	NORTH (Mounted on route marker post)							7	
M3-2-24	**24"x12"**	**EAST (Mounted on route marker post)**		**5**	**6**	**2**		**6**	**7**	**42**
M3-3-24	24"x12"	SOUTH (Mounted on route marker post)							7	
M3-4-24	**24"x12"**	**WEST (Mounted on route marker post)**		**5**	**5**	**2**		**5**	**7**	**35**
M4-8-24	**24"x12"**	**DETOUR (Mounted on route marker post)**		**9**	**9**			**9**	**7**	**63**
M4-9-30	30"x24"	DETOUR ARROW RIGHT or LEFT/AHD AND RT or LT							15	
M4-10-48	48"x18"	DETOUR (INSIDE ARROW) RIGHT or LEFT (Mounted on barricade)							7	
M5-1-21	21"x15"	ADVANCE TURN ARROW RT or LT(Mounted on route marker post)							7	
M5-1-30	30"x21"	ADVANCE TURN ARROW RT or LT(Mounted on route marker post)							9	
M5-1(I)-21	21"x15"	ADVANCE TURN ARROW RT or LT(Mounted on route marker post)							7	
M6-1-21	**21"x15"**	**DIRECTIONAL ARROW RT or LT (Mounted on route marker post)**		**15**	**19**	**3**		**19**	**7**	**133**
M6-1-30	30"x21"	DIRECTIONAL ARROW RT or LT (Mounted on route marker post)							9	
M6-3-21	21"x15"	DIRECTIONAL ARROW UP (Mounted on route marker post)							7	
M6-3(I)-21	**21"x15"**	**DIRECTIONAL ARROW UP (Mounted on route marker post)**		**1**	**2**			**2**	**7**	**14**
R1-1-48	**48"x48"**	**STOP**		**4**	**5**	**2**		**5**	**32**	**160**
R1-2-60	60"x60"	YIELD							29	
R1-4-18	**18"x6"**	**ALL WAY**		**3**	**4**			**4**	**5**	**20**
R2-1-36	36"x48"	SPEED LIMIT __ (Portable only)							30	
R2-1-48	**48"x60"**	**SPEED LIMIT __**	**8**	**8**	**8**	**8**	**8**	**8**	**39**	**312**
R2-1aP-24	24"x18"	MINIMUM FEE $80 (Mounted on Speed Limit post)							10	
R2-1aP-24	**24"x18"**	**MINIMUM FEE $150 (Mounted on Speed Limit post)**	**4**	**4**	**4**	**4**	**4**	**4**	**10**	**40**
R3-2-48	48"x48"	NO LEFT TURN							35	
R3-7-30	30"x30"	LEFT or RIGHT LANE MUST TURN LEFT or RIGHT							17	
R4-1-48	48"x60"	DO NOT PASS							39	
R4-7-48	48"x60"	KEEP RIGHT							39	
R5-1-48	48"x48"	DO NOT ENTER							35	
R5-2-36	**36"x36"**	**NO TRUCKS SYMBOL**		**1**	**1**	**1**		**1**	**27**	**27**
R6-1-54	54"x18"	ONE WAY RIGHT or LEFT (Mounted on STOP or DO NOT ENTER post)							14	
R7-1-12	12"x18"	NO PARKING ANY TIME							11	
R9-9-24	**24"x12"**	**SIDEWALK CLOSED (Mounted on barricade)**	**3**	**5**	**4**	**3**	**1**	**5**	**3**	**15**
R9-11-24	24"x18"	SIDEWALK CLOSED, CROSS HERE (Mounted on barricade)							3	
R10-6-24	24"x36"	STOP HERE ON RED							16	
R11-2-48	48"x30"	ROAD CLOSED (Mounted on barricade)							12	
R11-2a-48	**48"x30"**	**STREET CLOSED (Mounted on barricade)**	**2**	**9**	**8**	**3**	**1**	**9**	**12**	**108**
R11-3a-60	60"x30"	ROAD CLOSED __ MILES AHEAD LOCAL TRAFFIC ONLY (Mtd on barricade)							15	
R11-3c-60	60"x30"	STREET CLOSED __ MILES AHEAD LOCAL TRAFFIC ONLY (Mtd on barricade)							15	
R11-4a-60	**60"x30"**	**STREET CLOSED TO THRU TRAFFIC (Mounted on barricade)**	**1**	**3**	**3**	**1**	**1**	**3**	**15**	**45**
R14-1-21	21"x15"	TRUCK ROUTE							7	
W1-3-48	**48"x48"**	**REVERSE TURN RIGHT or LEFT**	**8**	**5**	**7**	**2**		**8**	**35**	**280**
W1-4-48	48"x48"	REVERSE CURVE RIGHT or LEFT							35	
W1-4b-48	48"x48"	TWO LANE REVERSE CURVE RIGHT or LEFT							35	
W1-6-48	**48"x24"**	**ONE DIRECTION LARGE ARROW**	**1**	**4**	**4**	**1**		**4**	**26**	**104**
W1-7-48	48"x24"	TWO-DIRECTION LARGE ARROW							26	
W3-1-48	**48"x48"**	**STOP AHEAD**		**3**	**3**	**1**		**3**	**35**	**105**
W3-3-48	48"x48"	SIGNAL AHEAD							35	
W3-4-48	**48"x48"**	**BE PREPARED TO STOP**	**4**	**4**	**4**	**4**	**4**	**4**	**35**	**140**
W3-5-48	**48"x48"**	**SPEED REDUCTION AHEAD**	**4**	**4**	**4**	**4**	**4**	**4**	**35**	**140**
W4-2-48	48"x48"	LANE ENDS RIGHT or LEFT							35	
W5-1-48	**48"x48"**	**ROAD NARROWS**	**4**			**3**	**2**	**4**	**35**	**140**
W5-8-48	48"x48"	THRU TRAFFIC RIGHT LANE							35	
W5-9-48	48"x48"	ROAD WORK TRAFFIC ONLY DOWN & LT or RT ARROW							35	
W6-3-48	48"x48"	TWO WAY TRAFFIC							35	
W8-1-48	**48"x48"**	**BUMP**	**2**	**2**	**2**	**2**	**2**	**2**	**35**	**70**
W8-3-48	48"x48"	PAVEMENT ENDS							35	
W8-7-48	48"x48"	LOOSE GRAVEL							35	
W8-11-48	48"x48"	UNEVEN LANES							35	
W8-12-48	48"x48"	NO CENTER LINE							35	
W8-17-48	48"x48"	SHOULDER DROP-OFF SYMBOL							35	
W8-53-48	48"x48"	TRUCKS ENTERING HIGHWAY							35	
W8-54-48	48"x48"	TRUCKS ENTERING AHEAD or __ FT or _ MILE							35	
W8-55-48	48"x48"	TRUCKS CROSSING AHEAD or __ FT or _ MILE							35	
W8-56-48	48"x48"	TRUCKS EXITING HIGHWAY							35	
W9-3a-48	48"x48"	CENTER LANE CLOSED SYMBOL							35	
W11-2-36	**36"x36"**	**PEDESTRIAN CROSSING (Fluorescent yellow-green)**		**2**	**2**	**2**	**2**	**2**	**27**	**54**
W13-1P-30	30"x30"	__ MPH ADVISORY SPEED PLAQUE (Mounted on warning sign post)							14	
W14-3-64	64"x48"	NO PASSING ZONE							28	
W16-2P-30	30"x24"	__ FEET PLAQUE (Mounted on warning sign post)							10	
W20-1-48	**48"x48"**	**ROAD WORK AHEAD or _FT or _ MILE**	**6**	**6**	**6**	**6**	**6**	**6**	**35**	**210**

SIGN NUMBER	SIGN SIZE	DESCRIPTION	AMOUNT REQUIRED BY PHASE NO. 1	2	3	4	5	TOTAL AMOUNT REQUIRED	UNITS PER AMOUNT	UNITS SUB TOTAL
W20-2-48	48"x48"	DETOUR AHEAD or __ FT or _ MILE							35	
W20-3-48	48"x48"	ROAD or STREET CLOSED AHEAD or __ FT or _ MILE							35	
W20-4-48	48"x48"	ONE LANE ROAD AHEAD or __ FT or _ MILE							35	
W20-5-48	48"x48"	RIGHT or CENTER or LEFT LANE CLOSED AHEAD or __ FT or _ MILE							35	
W20-7-48	**48"x48"**	**FLAGGER**	**4**	**4**	**4**	**4**	**4**	**4**	**35**	**140**
W20-8-18	**18"x18"**	**STOP - SLOW PADDLE Back to Back**	**4**	**4**	**4**	**4**	**4**	**4**	**5**	**20**
W20-52P-54	54"x12"	NEXT __ MILES (Mounted on warning sign post)							12	
W21-1-48	48"x48"	WORKERS							35	
W21-2-48	48"x48"	FRESH OIL							35	
W21-3-48	48"x48"	ROAD MACHINERY AHEAD or __ FT or _ MILE							35	
W21-5-48	**48"x48"**	**SHOULDER WORK**	**4**	**4**	**4**	**4**	**4**	**4**	**35**	**140**
W21-5a-48	48"x48"	RIGHT or LEFT SHOULDER CLOSED							35	
W21-5b-48	48"x48"	RIGHT or LEFT SHOULDER CLOSED AHEAD or __ FT or _ MILE							35	
W21-6-48	48"x48"	SURVEY CREW							35	
W21-50-48	48"x48"	BRIDGE PAINTING AHEAD or __ FT							35	
W21-51-48	48"x48"	MATERIAL ON ROADWAY							35	
W21-52-48	48"x48"	PAVEMENT BREAKS							35	
W21-53-48	48"x48"	RUMBLE STRIPS AHEAD							35	
W22-8-48	48"x48"	FRESH OIL LOOSE ROCK							35	

SPECIAL SIGNS

CONSIGN 1	**114"x66"**	**ND 22 SOUTH BY-PASS 12FT LANE WIDE VEHICLES USE ALTERNATE ROUTE**	**6**	**6**	**6**	**6**	**6**	**6**	**76**	**456**
CONSIGN 2	**114"x66"**	**12FT LANE WIDE VEHICLES USE ALTERNATE ROUTE**	**1**	**1**	**1**	**1**	**1**	**1**	**76**	**76**
CONSIGN 3	**36"x18"**	**LOAF 'N JUG SOUTHVIEW LIQUOR**		**6**	**3**			**6**	**18**	**108**
CONSIGN 4	**36"x18"**	**LOAF 'N JUG**			**6**			**6**	**18**	**108**
CONSIGN 5	**36"x18"**	**SOUTHVIEW LIQUOR**			**3**			**3**	**18**	**54**
CONSIGN 6	**42"x15"**	**8TH ST S**		**11**	**11**	**4**		**11**	**15**	**165**
CONSIGN 7	**96"x78"**	**ND 22 SOUTH TRUCK DETOUR USE EXIT 59**		**2**	**2**	**2**		**2**	**76**	**152**
CONSIGN 8	**78"x54"**	**ND 22 SOUTH TRUCK DETOUR USE STATE AVE**		**2**	**2**	**2**		**2**	**50**	**100**

SPEC & CODE

704-1000	**TRAFFIC CONTROL SIGNS**	**TOTAL UNITS**	**4116**

SPEC & CODE	DESCRIPTION	UNIT	QUANTITY BY PHASE NO. 1	2	3	4	5	TOTAL QUANTITY
704-0100	**FLAGGING**	MHR	**500**	**500**	**500**	**500**	**500**	**2500**
704-1020	**ATTENUATION DEVICE SPECIAL**	EACH	**2**	**6**	**6**	**2**		**6**
704-1048	PORTABLE RUMBLE STRIPS	EACH						
704-1050	TYPE I BARRICADES	EACH						
704-1052	**TYPE III BARRICADES**	EACH	**10**	**32**	**30**	**10**	**1**	**32**
704-1054	**SIDEWALK BARRICADE**	EACH	**3**	**5**	**4**	**3**	**1**	**5**
704-1058	**PEDESTRIAN WALKWAY**	LF	**106**	**317**	**535**	**254**		**535**
704-1060	**DELINEATOR DRUMS**	EACH	**135**	**126**	**133**	**60**	**6**	**135**
704-1065	TRAFFIC CONES	EACH						
704-1067	**TUBULAR MARKERS**	EACH	**66**	**18**	**28**	**13**		**66**
704-1070	DELINEATOR	EACH						
704-1072	FLEXIBLE DELINEATORS	EACH						
704-1080	**STACKABLE VERTICAL PANELS**	EACH	**65**	**58**	**58**	**49**	**51**	**65**
704-1081	VERTICAL PANELS - BACK TO BACK	EACH						
704-1085	SEQUENCING ARROW PANEL - TYPE A	EACH						
704-1086	SEQUENCING ARROW PANEL - TYPE B	EACH						
704-1087	SEQUENCING ARROW PANEL - TYPE C	EACH						
704-1500	**OBLITERATION OF PVMT MK**	SF		**1106**				**1106**
704-2108	**TEMPORARY CURB RAMP**	EACH	**2**	**6**	**5**	**6**	**6**	**6**
704-3501	PORTABLE PRECAST CONCRETE MED BARRIER	LF						
704-3510	PRECAST CONCRETE MED BARRIER - STATE FURNISHED	EACH						
704-3511	**STATE FURNISHED MEDIAN BARRIER**	LF	**180**	**230**	**170**	**130**		**230**
752-0911	**TEMPORARY SAFETY FENCE**	LF	**527**	**527**	**527**	**527**	**561**	**561**
754-0592	**RESET SIGN PANEL**	EACH		**1**	**1**	**1**		**1**
754-0593	**RESET SIGN SUPPORT**	EACH		**1**	**1**	**1**		**1**
762-0200	RAISED PAVEMENT MARKERS	EACH						
762-0420	SHORT TERM 4IN LINE - TYPE R	LF						
762-0430	**SHORT TERM 4IN LINE - TYPE NR**	LF		**1814**	**1806**	**772**		**4392**
762-0434	SHORT TERM 8IN LINE-TYPE NR	LF						
762-0442	SHORT TERM MESSAGE-TYPE NR	SF						

NOTE:
If additional signs are required, units will be calculated using the formula from Section III-18.06 of the Design Manual.
http://www.dot.nd.gov/

REGISTERED PROFESSIONAL ENGINEER
JASON P GULLICKS
PE-4792
DATE 2025.12.17 19:10:03 -06'00'
NORTH DAKOTA

Traffic Control Devices List

I-94B & 23rd Ave W/CO 10 Intersection

STATE	PROJECT NO.	SECTION NO.	SHEET NO.
ND	HEN-5-022(144)069	100	2

WZTC TEMPORARY PAVEMENT MARKING					
Phase	Alignment	Begin Station	End Station	Type	Bid Item 762-0430 SHORT TERM 4IN LINE - TYPE NR (LF)
2	OL_Bypass_N	102+85	104+85	Dbl Yel	400
	OL_Bypass_N	105+75	110+07	Dbl Yel	864
	OL_Bypass_S_1	201+60	204+35	Dbl Yel	550
3	OL_Bypass_N	102+75	104+35	Dbl Yel	320
	OL_Bypass_N	105+17	108+10	Dbl Yel	586
	OL_Bypass_N	108+60	110+10	Dbl Yel	300
	OL_Bypass_S_2	301+60	304+60	Dbl Yel	600
4	OL_Bypass_S_2	301+64	305+50	Dbl Yel	772
				Total:	4,392

704-1500 OBLITERATION OF PVMT MK					
Alignment	Begin Station	End Station	Amount	Type	SF
SCL8	63+50	65+42	580'	4" Line	193
			26'	8" Line	17
			2	Arrows	32
SCL22	3672+10	3675+30	931'	4" Line	310
			4	Arrow	64
	3681+10	3684+80	1468'	4" Line	489
				Total:	1,106

Work Zone Traffic Control

ND 22 & 8th St S Intersection

WZTC Quantities

REGISTERED PROFESSIONAL ENGINEER
JASON P GULLICKS
PE-4792
DATE 2025.12.17 19:10:40 -06'00'
NORTH DAKOTA

STATE	PROJECT NO.	SECTION NO.	SHEET NO.
ND	HEN-5-022(144)069	100	3

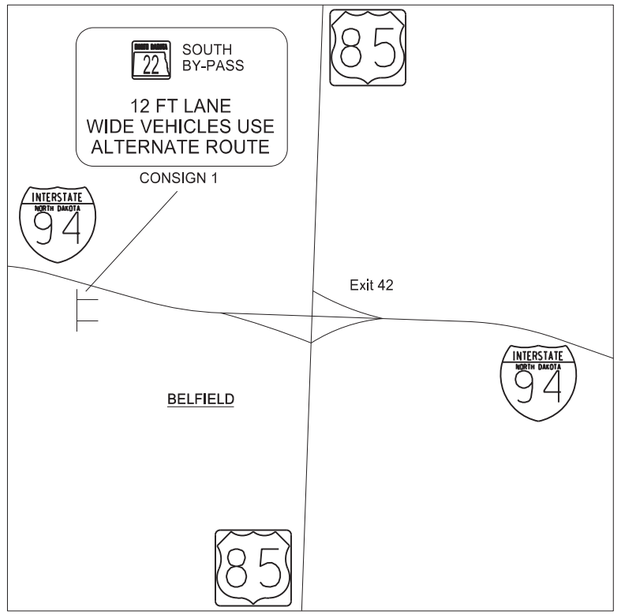

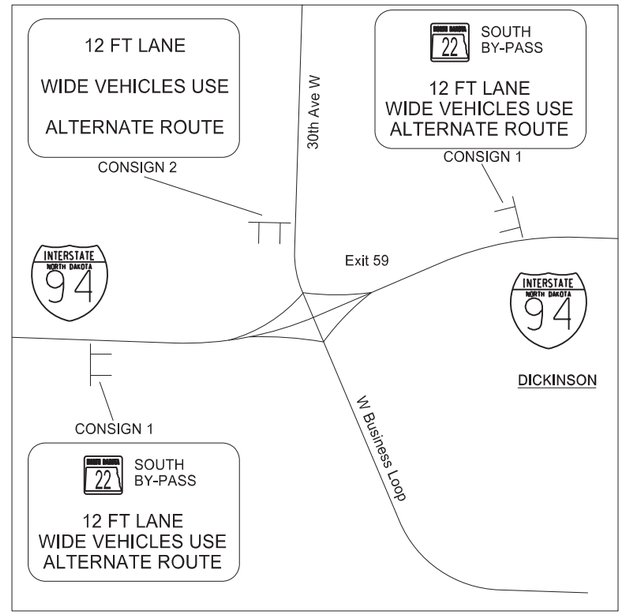

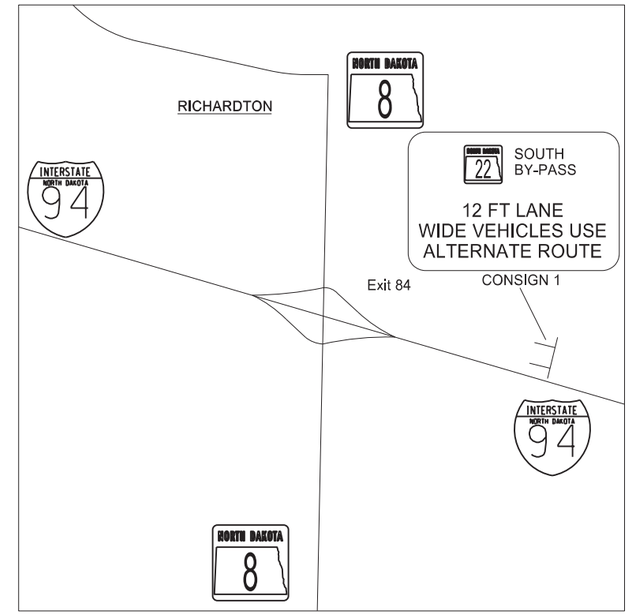

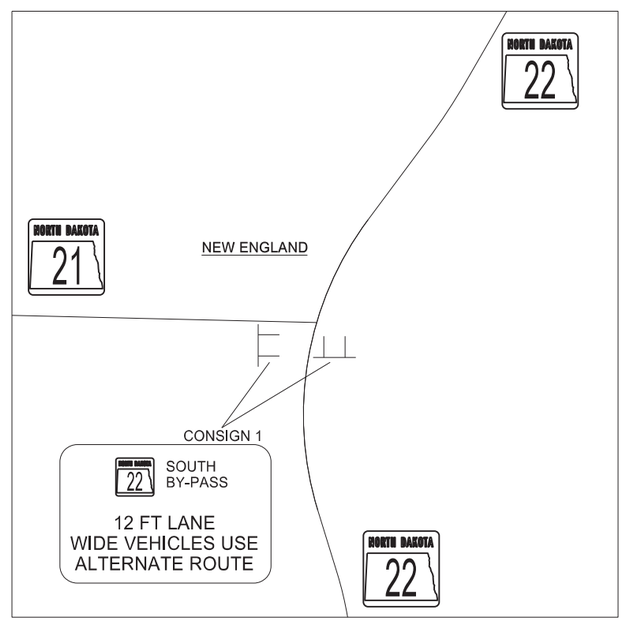

N

Work Zone Traffic Control

ND 22 & 8th St S Intersection

Width Restriction Signing

REGISTERED PROFESSIONAL ENGINEER
JASON P GULLICKS
PE-4792
DATE 2025.12.17 19:10:53 -06'00'
NORTH DAKOTA

STATE	PROJECT NO.	SECTION NO.	SHEET NO.
ND	HEN-5-022(144)069	100	4

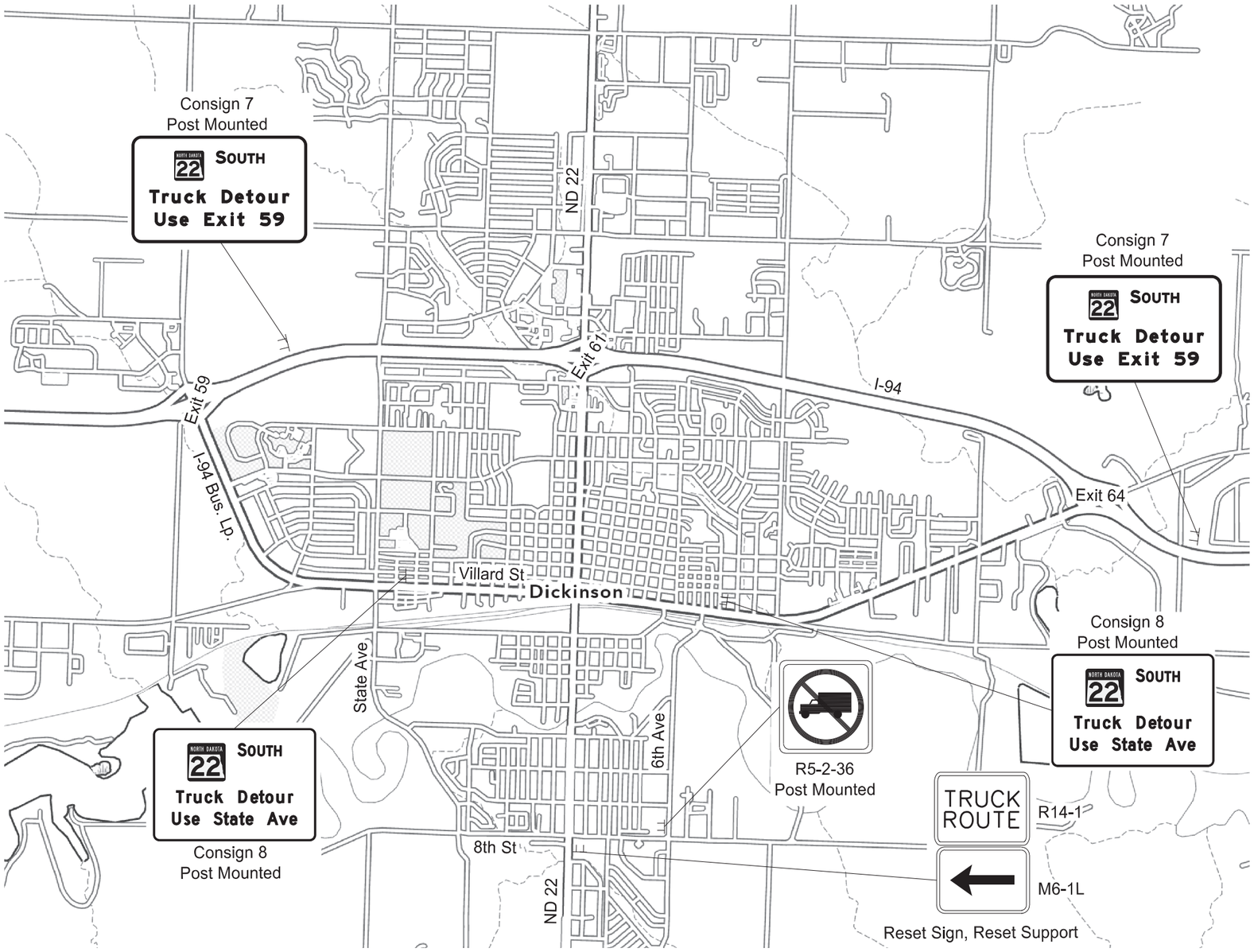

Phase 2, 3 & 4

Truck Detour Route

ND 22 & 8th St S Intersection

REGISTERED PROFESSIONAL ENGINEER
JASON P GULLICKS
PE-4792
DATE 2025.12.17
19:11:06 -06'00'
NORTH DAKOTA

STATE	PROJECT NO.	SECTION NO.	SHEET NO.
ND	HEN-5-022(144)069	100	5

SIGN NUMBER	CONSIGN 1
WIDTH X HEIGHT	9'-6" x 5'-6"
BORDER WIDTH	1.25" (inset 0.75")
CORNER RADIUS	9"
MOUNTING	Ground
BACKGROUND	TYPE: XI Reflective
	COLOR: Orange
LEGEND/BORDER	TYPE: XI Non-reflective
	COLOR: Black

SYMBOL	X	Y	WID	HT	ANGLE
ND_M1-5_2	37	40.1	18	18.01	0

STATION(S): none

AREA: 52.25 Sq.Ft.

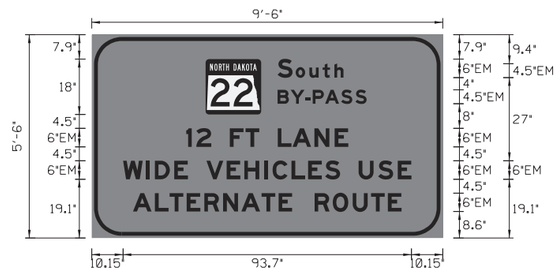

Dimensions are in inches.tenths

Letter locations are panel edge to lower left corner

PANEL STYLE: ND_Const_Conv_Special.ssl

LETTER POSITION (X)																				LENGTH	SIZE	SERIES
S	o	u	t	h																21.39	6,4.5/3.38	EM 2000
60.37	66.23	70.69	75.01	78.79																		
B	Y	-	P	A	S	S														28.89	4.5	EM 2000
60.37	64.56	69.42	71.76	75.76	80.98	85.62																
1	2	F	T	L	A	N	E													52.62	6	EM 2000
30.69	33.99	44.85	49.95	60.39	65.19	72.33	78.87															
W	I	D	E	V	E	H	I	C	L	E	S	U	S	E						93.66	6	EM 2000
10.17	17.61	20.49	26.79	37.23	43.83	49.53	56.07	58.71	64.89	70.29	75.81	86.67	93.03	99.39								
A	L	T	E	R	N	A	T	E		R	O	U	T	E						87.24	6	EM 2000
13.38	20.52	25.32	30.84	36.54	42.66	48.6	55.14	60.66	65.52	72.36	78.24	84.72	90.66	96.18								

SIGN NUMBER	CONSIGN 2
WIDTH X HEIGHT	9'-6" x 5'-6"
BORDER WIDTH	1.25" (inset 0.75")
CORNER RADIUS	9"
MOUNTING	Ground
BACKGROUND	TYPE: XI Reflective
	COLOR: Orange
LEGEND/BORDER	TYPE: XI Non-reflective
	COLOR: Black

SYMBOL	X	Y	WID	HT	ANGLE

STATION(S): none

AREA: 52.25 Sq.Ft.

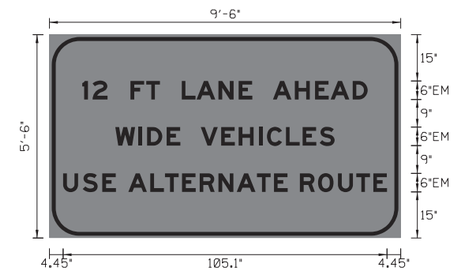

Dimensions are in inches.tenths

Letter locations are panel edge to lower left corner

PANEL STYLE: ND_Const_Conv_Special.ssl

LETTER POSITION (X)																				LENGTH	SIZE	SERIES
1	2		F	T		L	A	N	E		A	H	E	A	D					92.64	6	EM 2000
10.66	13.96	19.48	26.32	31.42	36.1	42.94	47.74	54.88	61.42	66.28	72.52	79.66	86.2	91.3	98.44							
W	I	D	E		V	E	H	I	C	L	E	S								71.16	6	EM 2000
21.4	28.84	31.72	38.02	42.88	49.12	55.72	61.42	67.96	70.6	76.78	82.18	87.7										
U	S	E	A	L	T	E	R	N	A	T	E	R	O	U	T	E				105.14	6	EM 2000
4.43	10.79	17.15	25.59	32.73	37.53	43.05	48.75	54.87	60.81	67.35	72.87	81.31	87.19	93.67	99.61	105.13						

Work Zone Traffic Control

ND 22 & 8th St S Intersection

Sign Details

REGISTERED PROFESSIONAL ENGINEER
JASON P GULLICKS
PE-4792
DATE 2025.12.17 19:11:59 -06'00'
NORTH DAKOTA

STATE	PROJECT NO.	SECTION NO.	SHEET NO.
ND	HEN-5-022(144)069	100	6

SIGN NUMBER	CONSIGN 3
WIDTH X HEIGHT	3'-0" x 1'-6"
BORDER WIDTH	0.5" (inset 0")
CORNER RADIUS	1.5"
MOUNTING	Ground
BACKGROUND	TYPE: IV Reflective
	COLOR: Blue
LEGEND/BORDER	TYPE: IV Reflective
	COLOR: White

SYMBOL	X	Y	WID	HT	ANGLE

STATION(S): none

AREA: 4.5 Sq.Ft.

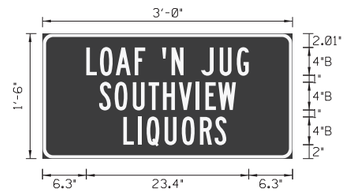

Dimensions are in inches.tenths

Letter locations are panel edge to lower left corner

PANEL STYLE: ND_TTC_Business.ssl

LETTER POSITION (X)												LENGTH	SIZE	SERIES
L	O	A	F		'	N		J	U	G		23.4	4	B 2000
6.3	8.26	10.54	13.26	14.9	17.22	18.58	20.74	22.86	25.5	27.98				
S	O	U	T	H	V	I	E	W				19.72	4	B 2000
8.14	10.38	12.98	15.26	17.34	19.62	22.06	23.46	25.3						
L	I	Q	U	O	R	S						14.88	4	B 2000
11.62	13.7	14.98	17.58	20.06	22.66	24.78								

SIGN NUMBER	CONSIGN 4
WIDTH X HEIGHT	3'-0" x 1'-6"
BORDER WIDTH	0.5" (inset 0")
CORNER RADIUS	1.5"
MOUNTING	Ground
BACKGROUND	TYPE: IV Reflective
	COLOR: Blue
LEGEND/BORDER	TYPE: IV Reflective
	COLOR: White

SYMBOL	X	Y	WID	HT	ANGLE

STATION(S): none

AREA: 4.5 Sq.Ft.

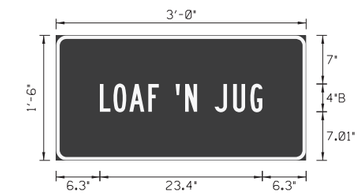

Dimensions are in inches.tenths

Letter locations are panel edge to lower left corner

PANEL STYLE: ND_TTC_Business.ssl

LETTER POSITION (X)												LENGTH	SIZE	SERIES
L	O	A	F		'	N		J	U	G		23.4	4	B 2000
6.3	8.26	10.54	13.26	14.9	17.22	18.58	20.74	22.86	25.5	27.98				

SIGN NUMBER	CONSIGN 5
WIDTH X HEIGHT	3'-0" x 1'-6"
BORDER WIDTH	0.5" (inset 0")
CORNER RADIUS	1.5"
MOUNTING	Ground
BACKGROUND	TYPE: IV Reflective
	COLOR: Blue
LEGEND/BORDER	TYPE: IV Reflective
	COLOR: White

SYMBOL	X	Y	WID	HT	ANGLE

STATION(S): none

AREA: 4.5 Sq.Ft.

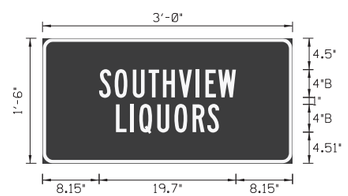

Dimensions are in inches.tenths

Letter locations are panel edge to lower left corner

PANEL STYLE: ND_TTC_Business.ssl

LETTER POSITION (X)												LENGTH	SIZE	SERIES
S	O	U	T	H	V	I	E	W				19.72	4	B 2000
8.14	10.38	12.98	15.26	17.34	19.62	22.06	23.46	25.3						
L	I	Q	U	O	R	S						14.88	4	B 2000
10.56	12.64	13.92	16.52	19	21.6	23.72								

Work Zone Traffic Control

ND 22 & 8th St S Intersection

Sign Details

REGISTERED PROFESSIONAL ENGINEER
JASON P GULLICKS
PE-4792
DATE 2025.12.17 19:12:18 -06'00'
NORTH DAKOTA

STATE	PROJECT NO.	SECTION NO.	SHEET NO.
ND	HEN-5-022(144)069	100	7

SIGN NUMBER	Consign 6
WIDTH X HEIGHT	3'-6" x 1'-3"
BORDER WIDTH	0.5" (inset 0")
CORNER RADIUS	1.5"
MOUNTING	Ground
BACKGROUND	TYPE: XI Reflective
	COLOR: Orange
LEGEND/BORDER	TYPE: XI Non-reflective
	COLOR: Black

SYMBOL	X	Y	WID	HT	ANGLE

STATION(S):
none

AREA: 4.38 Sq.Ft.

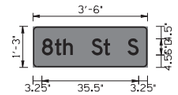

Dimensions are in inches.tenths

Letter locations are panel edge to lower left corner

PANEL STYLE: ND_Const_Conv_Detour.sld

LETTER POSITION (X)								LENGTH	SIZE	SERIES
8	t	h		S	t		S	35.46	6/4.5	D 2000
3.27	8.01	11.07	15.15	21.45	25.89	28.35	34.65			

SIGN NUMBER	Consign 7
WIDTH X HEIGHT	8'-0" x 6'-6"
BORDER WIDTH	0.75" (inset 0")
CORNER RADIUS	3"
MOUNTING	Ground
BACKGROUND	TYPE: XI Reflective
	COLOR: Orange
LEGEND/BORDER	TYPE: XI Non-Reflective
	COLOR: Black

SYMBOL	X	Y	WID	HT	ANGLE
ND_M1-5_2	17.53	43.75	24	24.01	0

STATION(S):
none

AREA: 52 Sq.Ft.

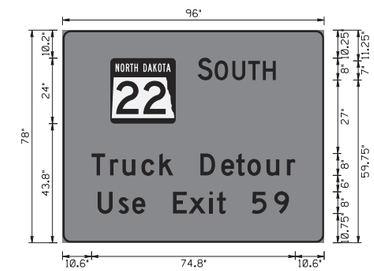

Dimensions are in inches.tenths

Letter locations are panel edge to lower left corner

PANEL STYLE: ND_Const_SpecialLssl

LETTER POSITION (X)																		LENGTH	SIZE	SERIES
S	O	U	T	H														28.71	8,7	D 2000
49.54	55.77	62.28	68.09	73.48																
T	r	u	c	k		D	e	t	o	u	r							74.76	8/6	D 2000
10.62	17.4	21.98	28.94	35.48	40.88	50.56	58.24	63.66	67.84	74.82	82.34									
U	s	e		E	x	i	t		5	9								70.2	8/6	D 2000
12.9	20.58	25.6	30.88	40.56	46.22	53.86	56.68	60.02	69.42	77.66										

SIGN NUMBER	Consign 8
WIDTH X HEIGHT	6'-6" x 4'-6"
BORDER WIDTH	0.75" (inset 0")
CORNER RADIUS	3"
MOUNTING	Ground
BACKGROUND	TYPE: XI Reflective
	COLOR: Orange
LEGEND/BORDER	TYPE: XI Non-reflective
	COLOR: Black

SYMBOL	X	Y	WID	HT	ANGLE
ND_M1-5_2	16.53	28.75	18	18	0

STATION(S):
none

AREA: 29.25 Sq.Ft.

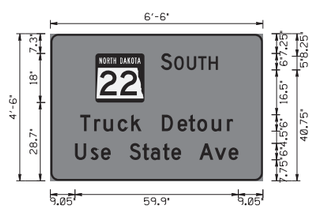

Dimensions are in inches.tenths

Letter locations are panel edge to lower left corner

PANEL STYLE: ND_Const_SpecialLssl

LETTER POSITION (X)																		LENGTH	SIZE	SERIES
S	O	U	T	H														20.93	6,5	D 2000
40.54	45.42	50.07	54.22	58.07																
T	r	u	c	k		D	e	t	o	u	r							56.07	6/4.5	D 2000
10.96	16.05	19.48	24.7	29.61	33.66	40.92	46.68	50.74	53.88	59.11	64.75									
U	s	e		S	t	a	t	e		A	v	e						59.9	6/4.5	D 2000
9.05	14.81	18.58	22.54	29.06	33.77	36.8	41.27	44.41	48.37	54.68	60.31	65.41								

Work Zone Traffic Control

ND 22 & 8th St S Intersection

Sign Details

REGISTERED PROFESSIONAL ENGINEER
JASON P GULLICKS
PE-4792
DATE 2025.12.17
19:12:35 -06'00'
NORTH DAKOTA

STATE	PROJECT NO.	SECTION NO.	SHEET NO.
ND	HEN-5-022(144)069	100	8

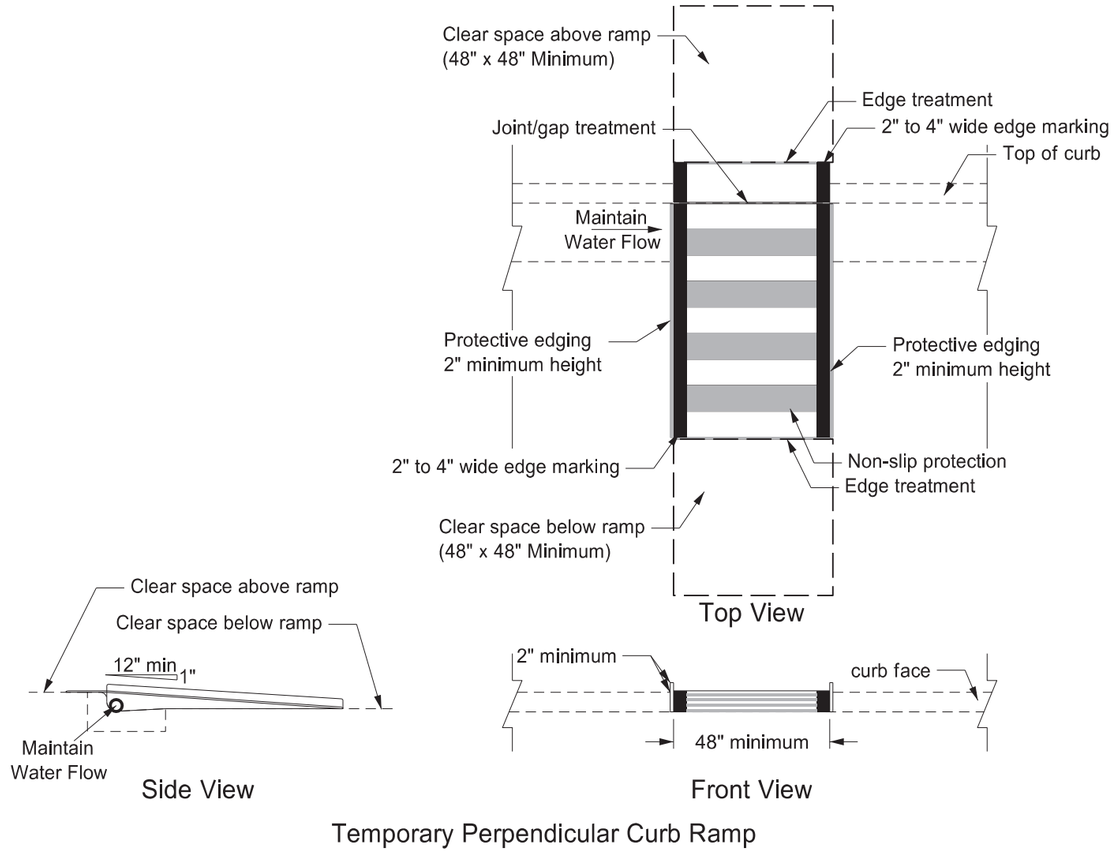

Temporary Perpendicular Curb Ramp

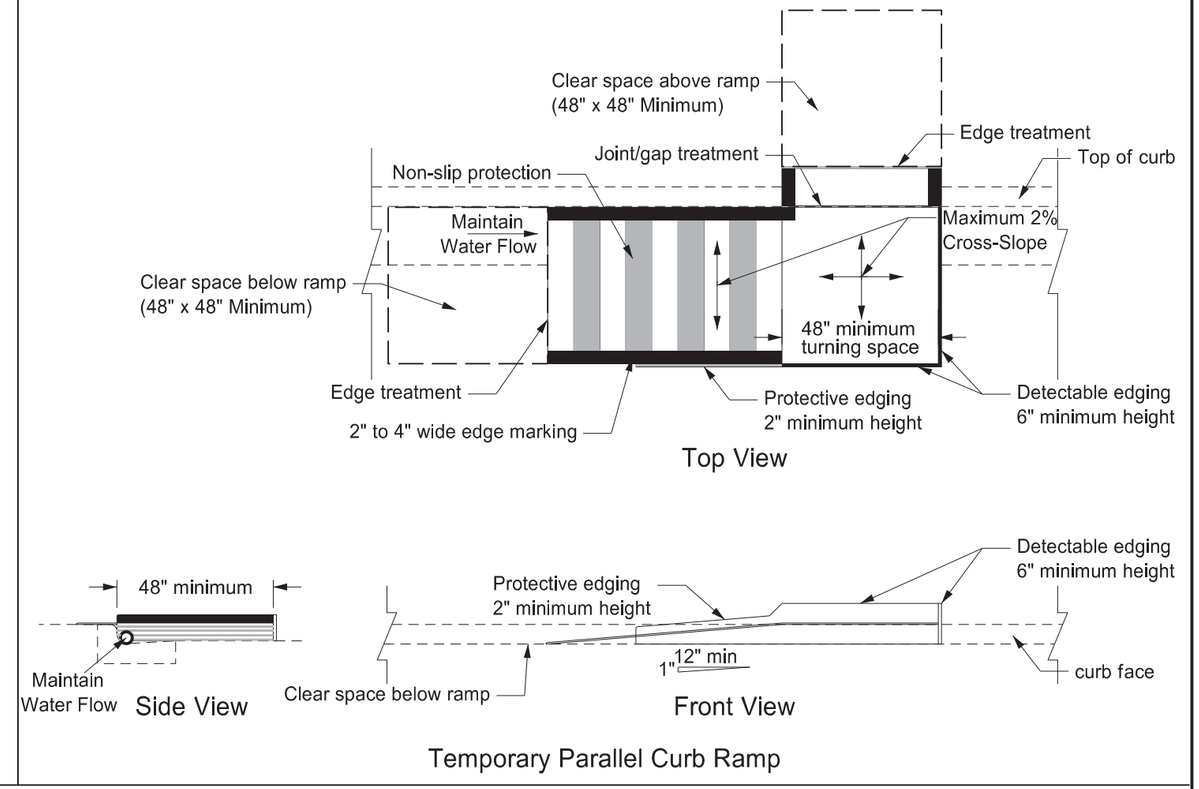

Temporary Parallel Curb Ramp

Edge Treatment

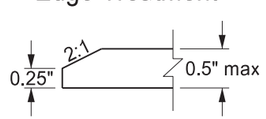

Maximum Surface
Height Change Detail

Joint/Gap Treatment

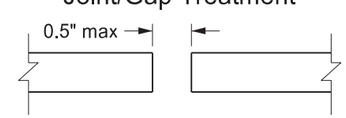

Maximum Width
Lateral Joints or Gaps

Work Zone Traffic Control

ND 22 & 8th St S Intersection

Temporary Pedestrian Curb Ramp Details

REGISTERED PROFESSIONAL ENGINEER
JASON P GULLICKS
PE-4792
DATE 2025.12.17
19:12:51 -06'00'
NORTH DAKOTA

STATE	PROJECT NO.	SECTION NO.	SHEET NO.
ND	HEN-5-022(144)069	100	9

Eliminate tubular markers if pedestrian channelization is retro-reflective

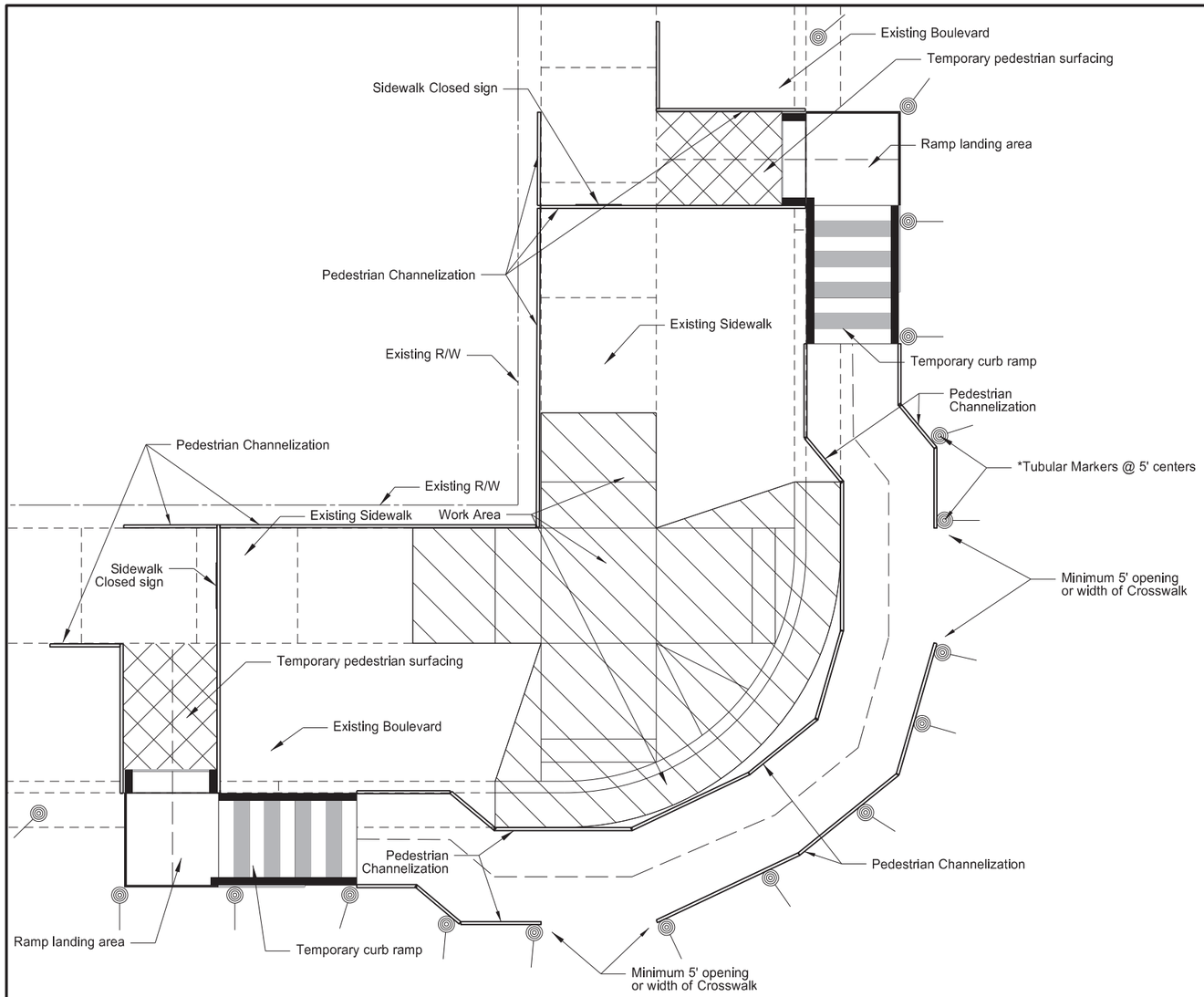

Work Zone Traffic Control

ND 22 & 8th St S Intersection

Temporary Pedestrian Access Route Detail

REGISTERED PROFESSIONAL ENGINEER
JASON P GULLICKS
PE-4792
DATE 2025.12.17 19:13:08 -06'00'
NORTH DAKOTA

STATE	PROJECT NO.	SECTION NO.	SHEET NO.
ND	HEN-5-022(144)069	100	10

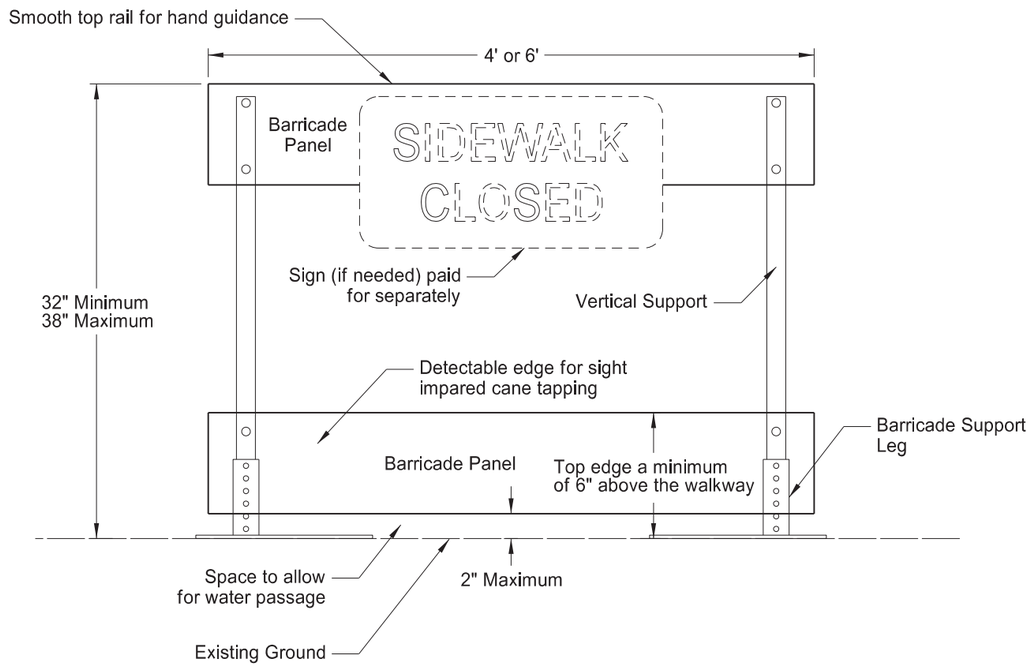

Front View

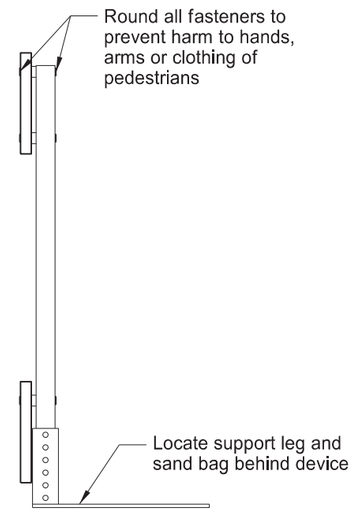

End View

NOTES:

Sidewalk Barricades

1. Provide self standing sidewalk barricade with no supports extending into the pedestrians path.
2. Use orange or orange and white diagonal striped barricade panels contrasting with the walkway surface.
3. Provide ADA compliant and NCHRP 350 or Mash Test Level 3 (TL3) approved sidewalk barricades.
4. Include all costs to furnish, maintain and remove sidewalk barricades in the price bid for "Sidewalk Barricade".

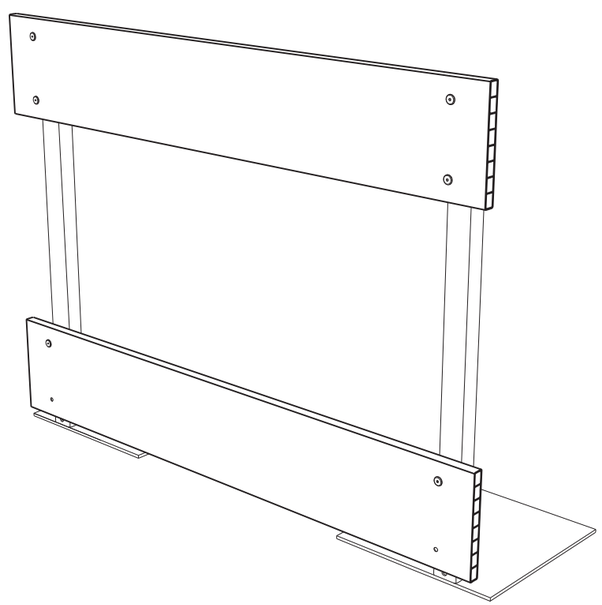

Perspective View

Work Zone Traffic Control

ND 22 & 8th St S Intersection

Sidewalk Barricade

REGISTERED PROFESSIONAL ENGINEER
JASON P GULLICKS
PE-4792
DATE 2025.12.17 19:13:23 -06'00'
NORTH DAKOTA

STATE	PROJECT NO.	SECTION NO.	SHEET NO.
ND	HEN-5-022(144)069	100	11

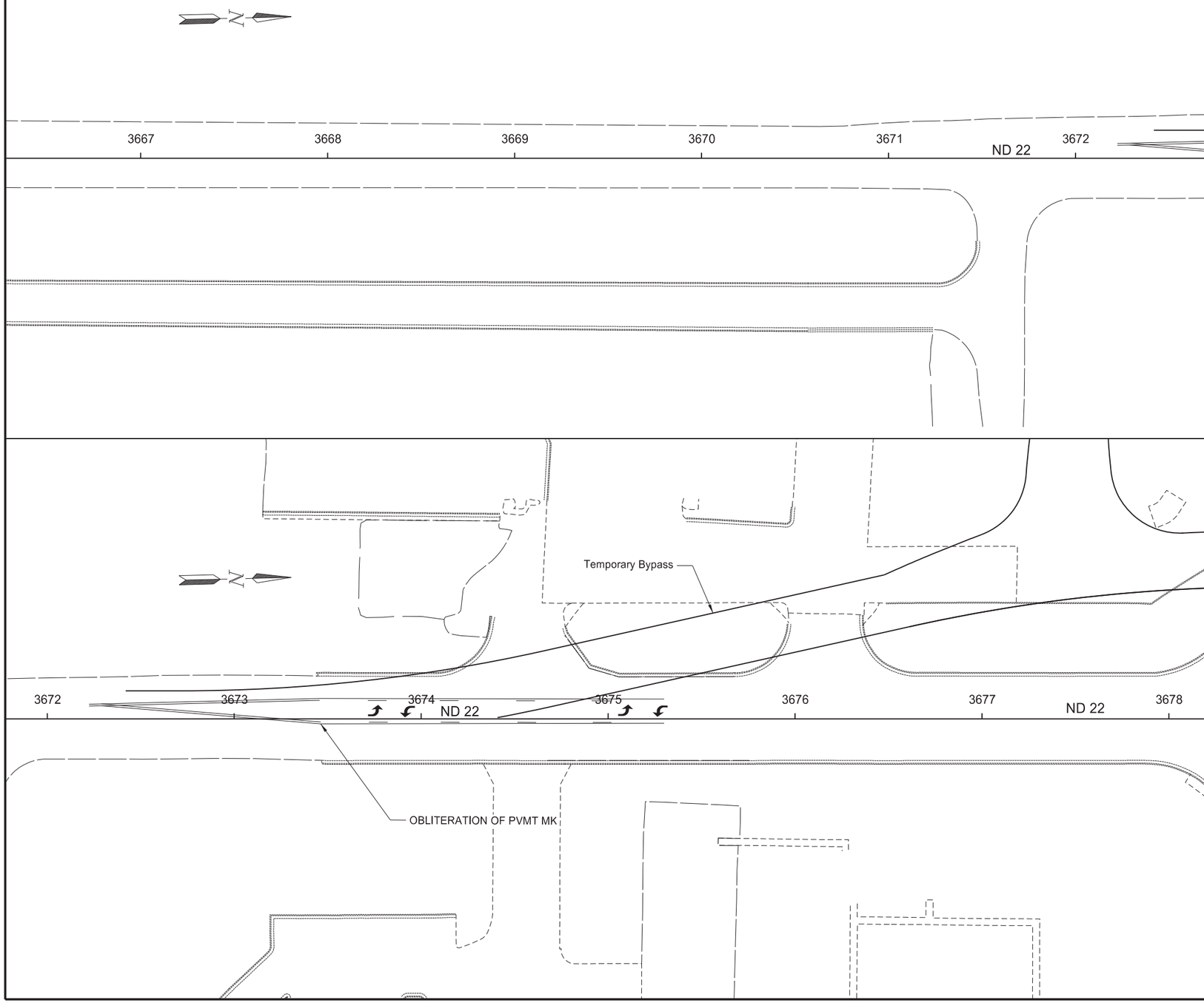

Obliteration of Pavement Marking

ND 22 & 8th St S Intersection
ND 22 - 11th St SE to 8th St

Sta 57+25 to Sta 68+25
(SCL22)

REGISTERED PROFESSIONAL ENGINEER
JASON P GULLICKS
PE-4792
DATE 2025.12.17
19:14:48 -06'00'
NORTH DAKOTA

STATE	PROJECT NO.	SECTION NO.	SHEET NO.
ND	HEN-5-022(144)069	100	12

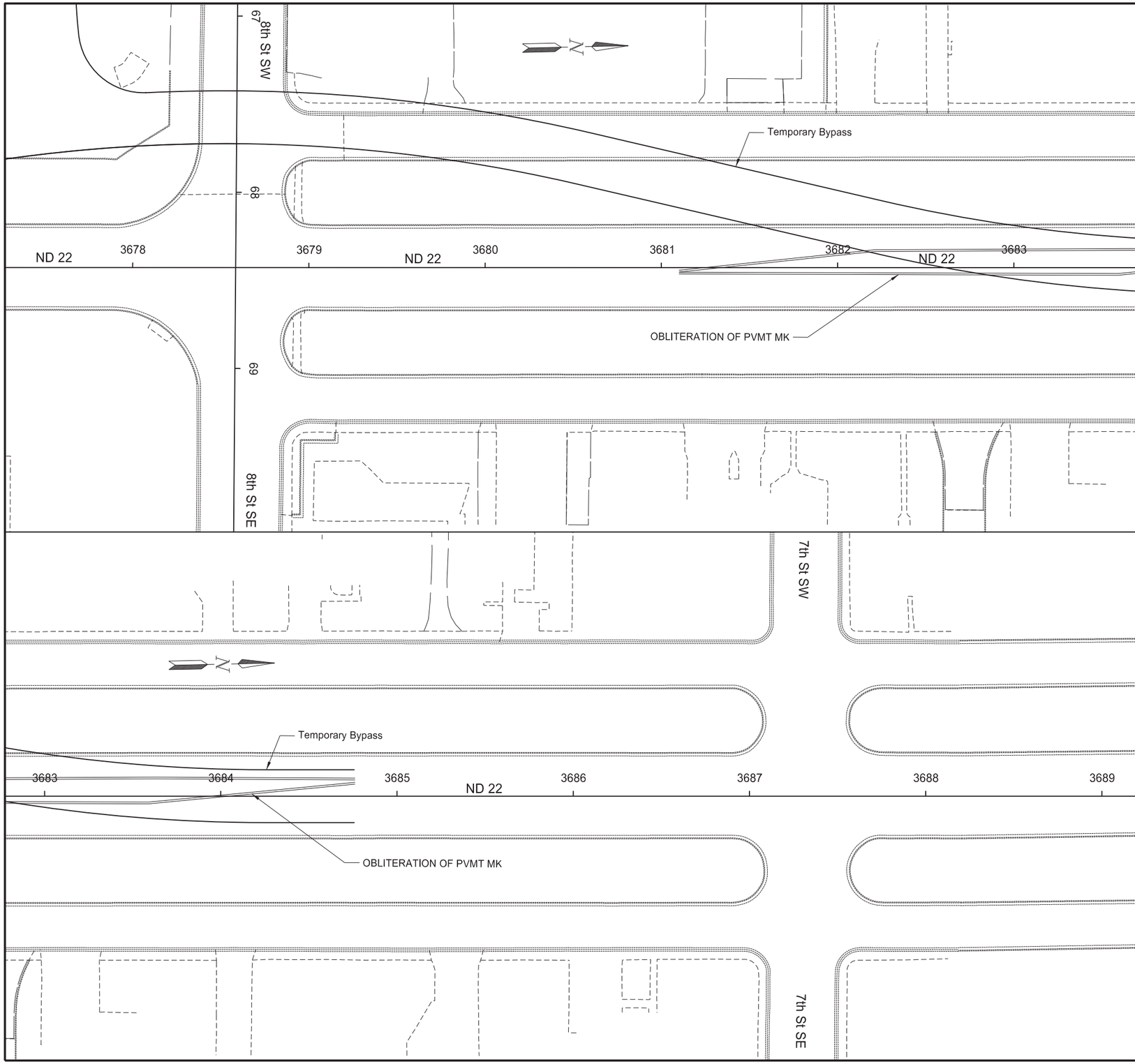

Obliteration of Pavement Marking

ND 22 & 8th St S Intersection
ND 22 - 8th St to 7th St

Sta 68+25 to Sta 79+25
(SCL22)

REGISTERED PROFESSIONAL ENGINEER
JASON P GULLICKS
PE-4792
DATE 2025.12.17
19:15:27 -06'00'
NORTH DAKOTA

STATE	PROJECT NO.	SECTION NO.	SHEET NO.
ND	HEN-5-022(144)069	100	13

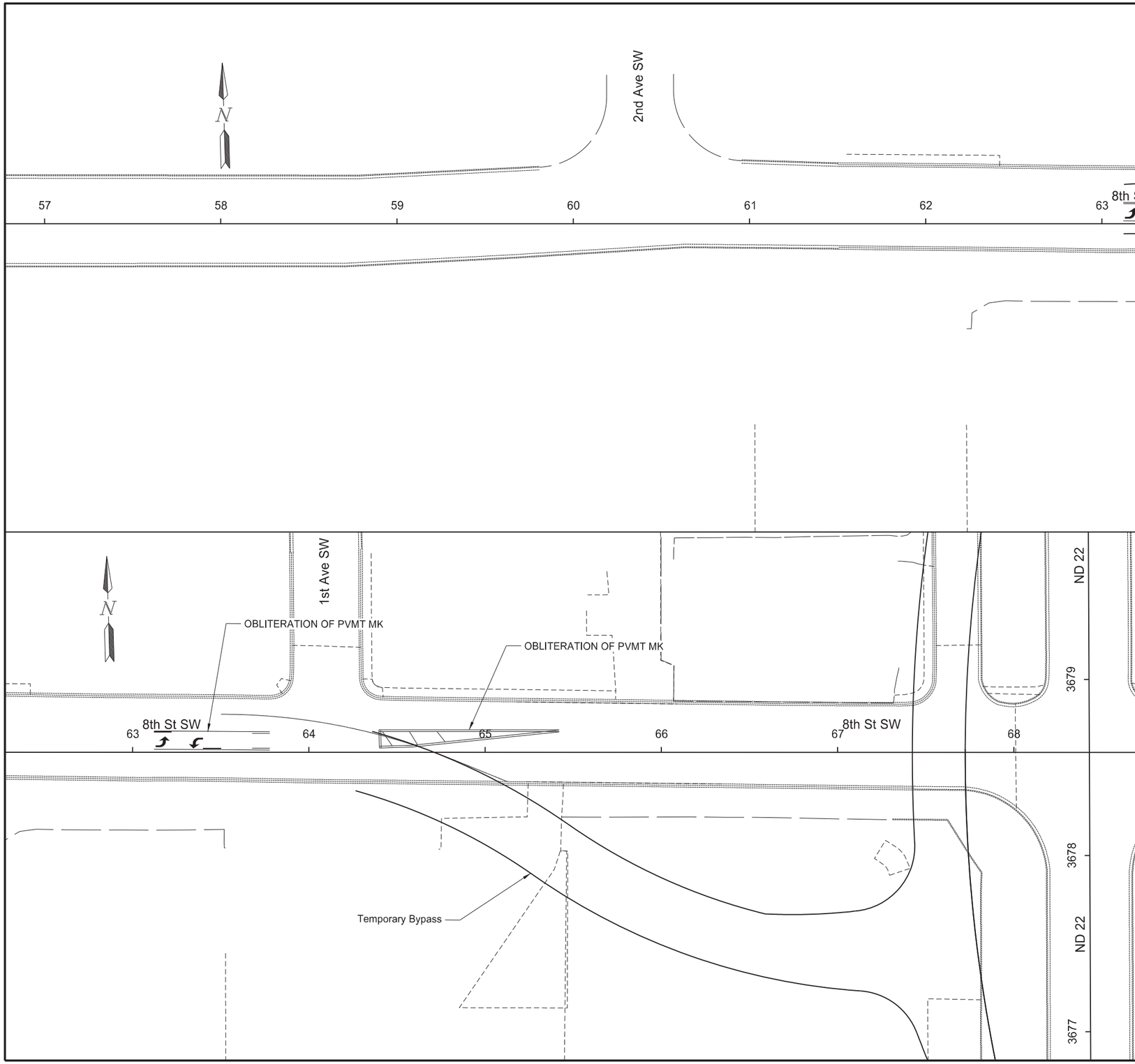

Obliteration of Pavement Marking

ND 22 & 8th St S Intersection
8th St SW - 2nd Ave SW to ND 22

Sta 3666+75 to Sta 3677+75
(SL8)

REGISTERED PROFESSIONAL ENGINEER
JASON P GULLICKS
PE-4792
DATE 2025.12.17
19:15:44 -06'00'
NORTH DAKOTA

STATE	PROJECT NO.	SECTION NO.	SHEET NO.
ND	HEN-5-022(144)069	100	14

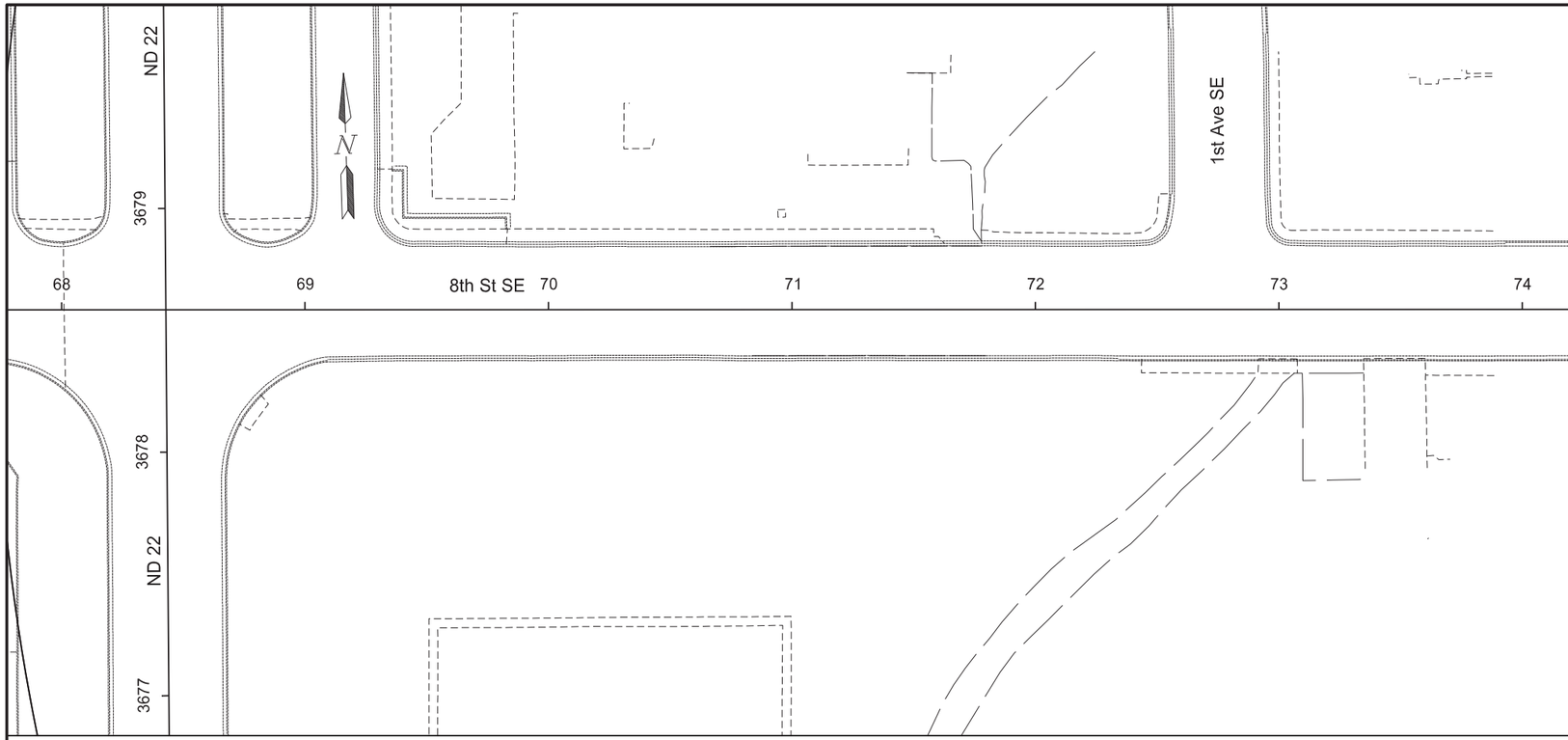

Obliteration of Pavement Marking

ND 22 & 8th St S Intersection
8th St SE - ND 22 to 1ST St SE

Sta 3677+75 to Sta 3688+75
(SL8)

REGISTERED PROFESSIONAL ENGINEER
JASON P GULLICKS
PE-4792
DATE 2025.12.17 19:16:00 -06'00'
NORTH DAKOTA

STATE	PROJECT NO.	SECTION NO.	SHEET NO.
ND	HEN-5-022(144)069	100	15

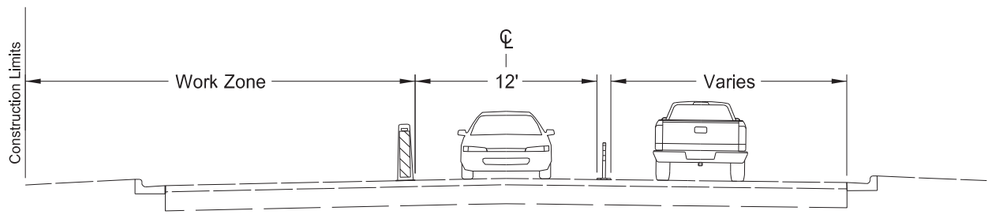

Existing Typical Section - ND 22
SCL22
Sta 3673+50 to Sta 3676+00

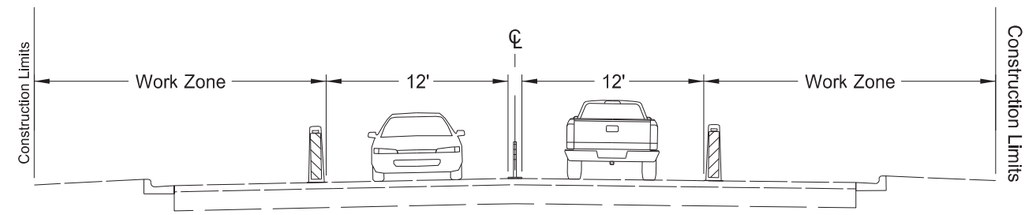

Existing Typical Section - ND 22
SCL22
Sta 3676+00 to Sta 3683+00

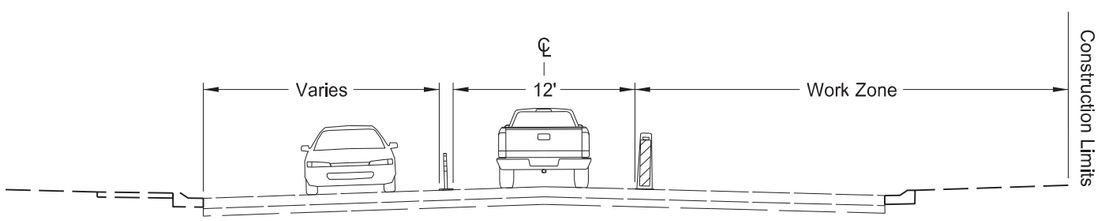

Existing Typical Section - 8th St
SCL8
Sta 62+50 to Sta 67+00

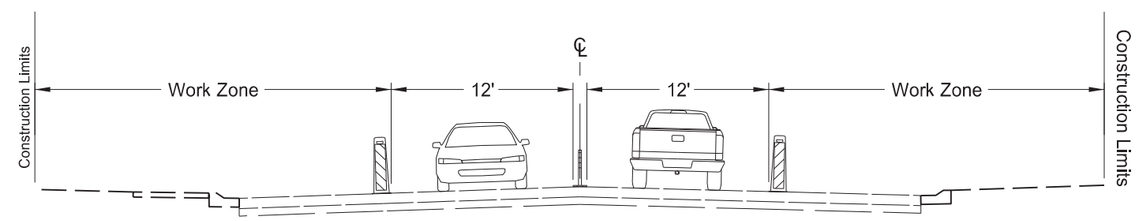

Existing Typical Section - 8th St
SCL8
Sta 67+00 to Sta 67+75
Sta 69+25 to Sta 72+75

Traffic Sequencing

ND 22 & 8th St S Intersection

Phase 1 Typical Sections

REGISTERED PROFESSIONAL ENGINEER
JASON P GULLICKS
PE-4792
DATE 2025.12.17 19:16:32 -06'00'
NORTH DAKOTA

STATE	PROJECT NO.	SECTION NO.	SHEET NO.
ND	HEN-5-022(144)069	100	16

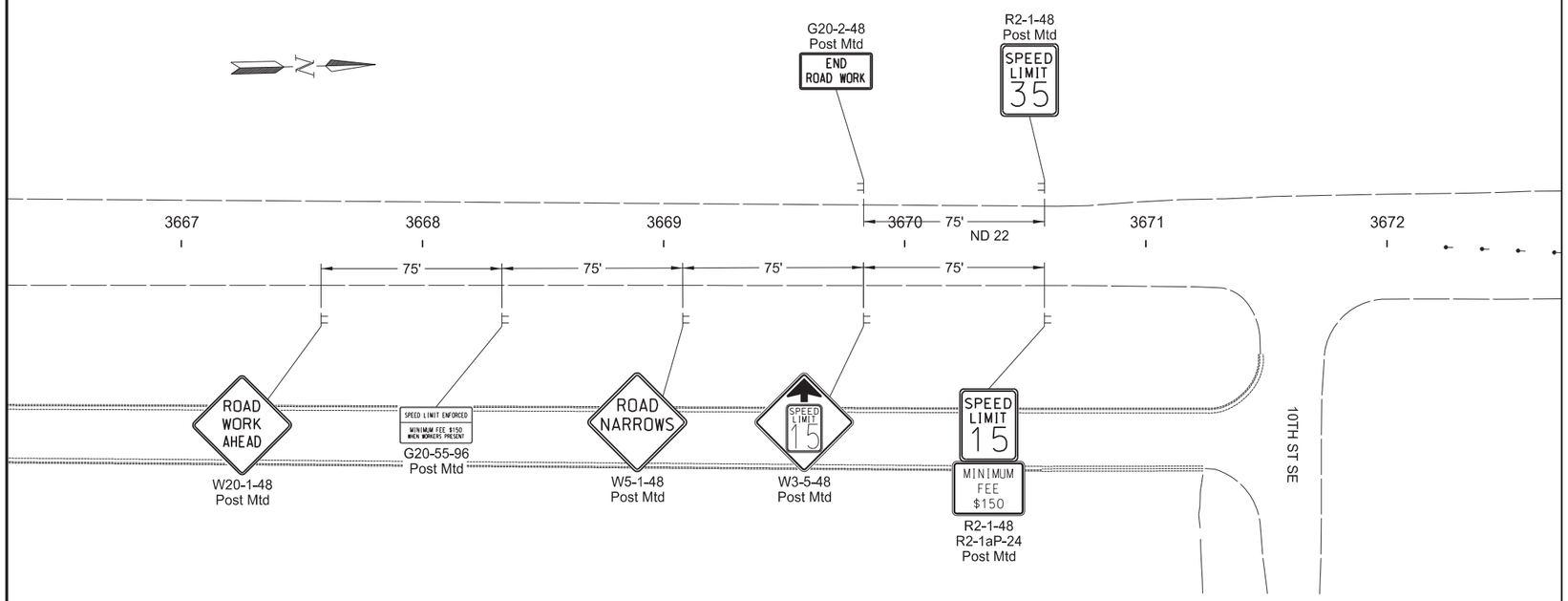

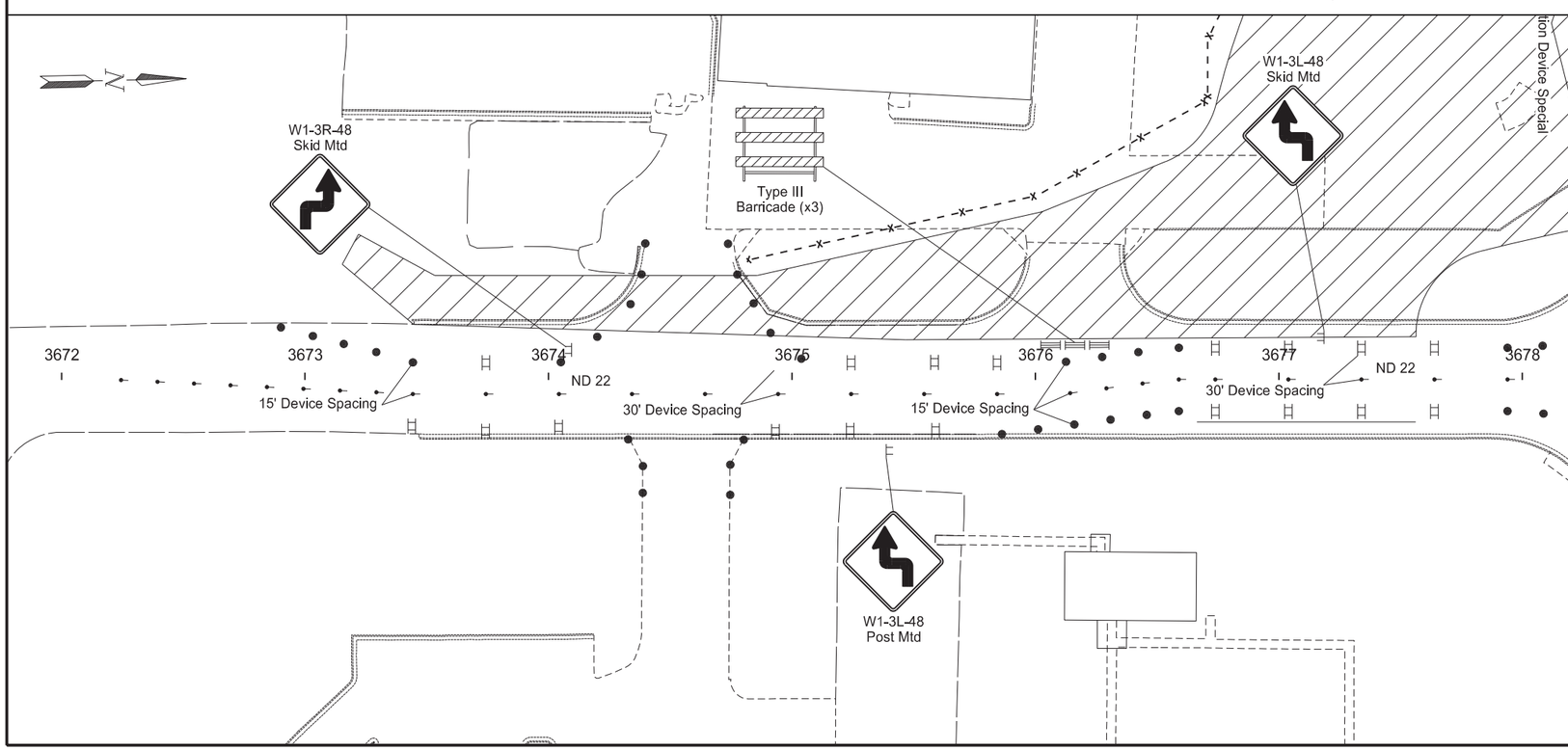

LEGEND

- Stackable Vertical Panel
- Delineator Drum
- Tubular Marker
- Safety Fence
- Barrier
- Work Zone
- Temporary Pedestrian Walkway

Work Zone Traffic Control

Phase 1

ND 22 & 8th St S Intersection
ND 22 - 11th St SE to 8th St

Sta 3666+75 to Sta 3677+75
(SCL22)

REGISTERED PROFESSIONAL ENGINEER
JASON P GULLICKS
PE-4792
DATE 2025.12.17
19:16:48 -06'00'
NORTH DAKOTA

STATE	PROJECT NO.	SECTION NO.	SHEET NO.
ND	HEN-5-022(144)069	100	17

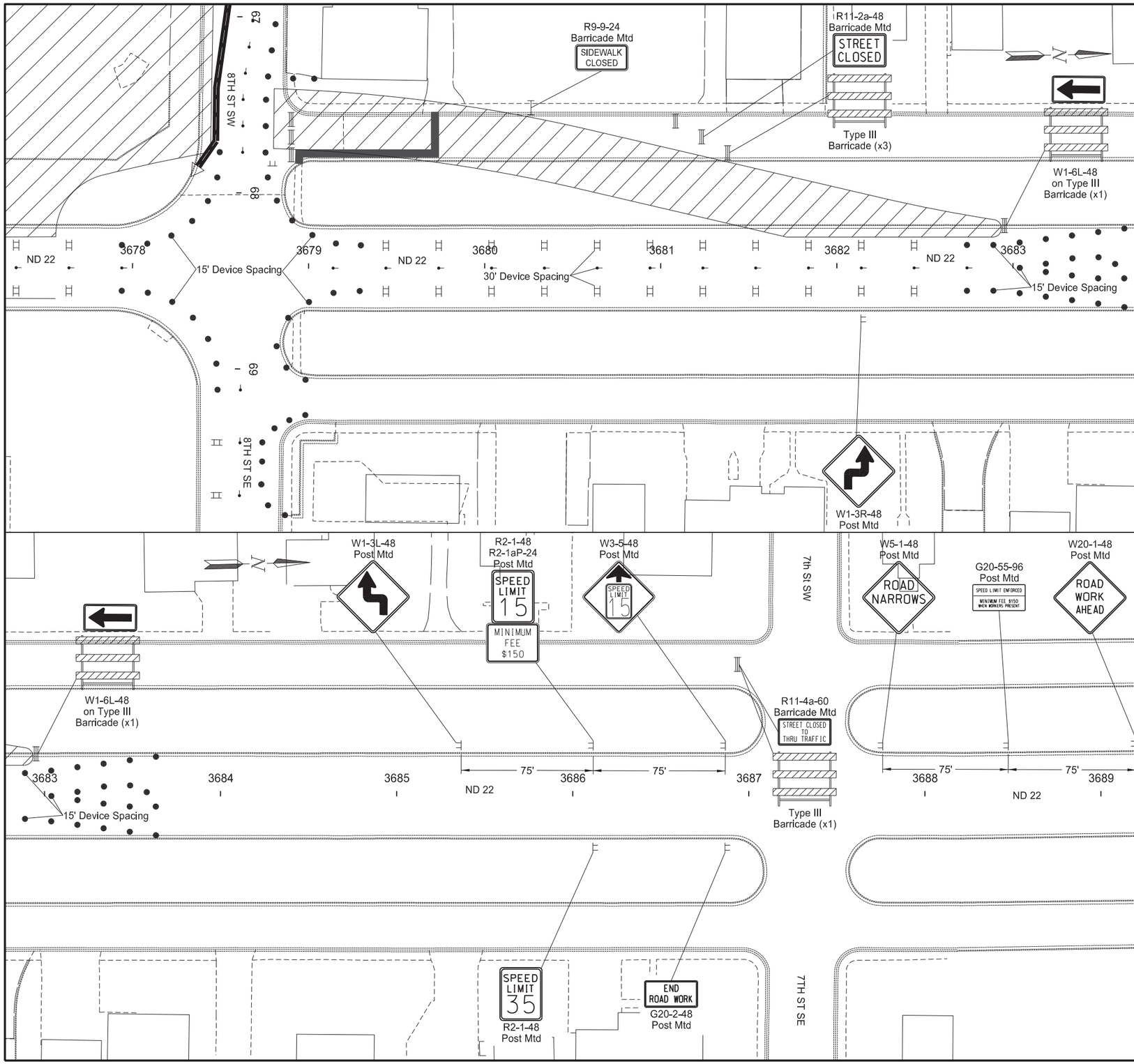

LEGEND

- Stackable Vertical Panel
- Delineator Drum
- Tubular Marker
- Safety Fence
- Barrier
- Work Zone
- Temporary Pedestrian Walkway

Work Zone Traffic Control

Phase 1

ND 22 & 8th St S Intersection
ND 22 - 8th St to 7th St

Sta 3677+75 to Sta 3688+75
(SCL22)

REGISTERED PROFESSIONAL ENGINEER
JASON P GULLICKS
PE-4792
DATE 2025.12.17 19:23:05 -06'00'
NORTH DAKOTA

STATE	PROJECT NO.	SECTION NO.	SHEET NO.
ND	HEN-5-022(144)069	100	18

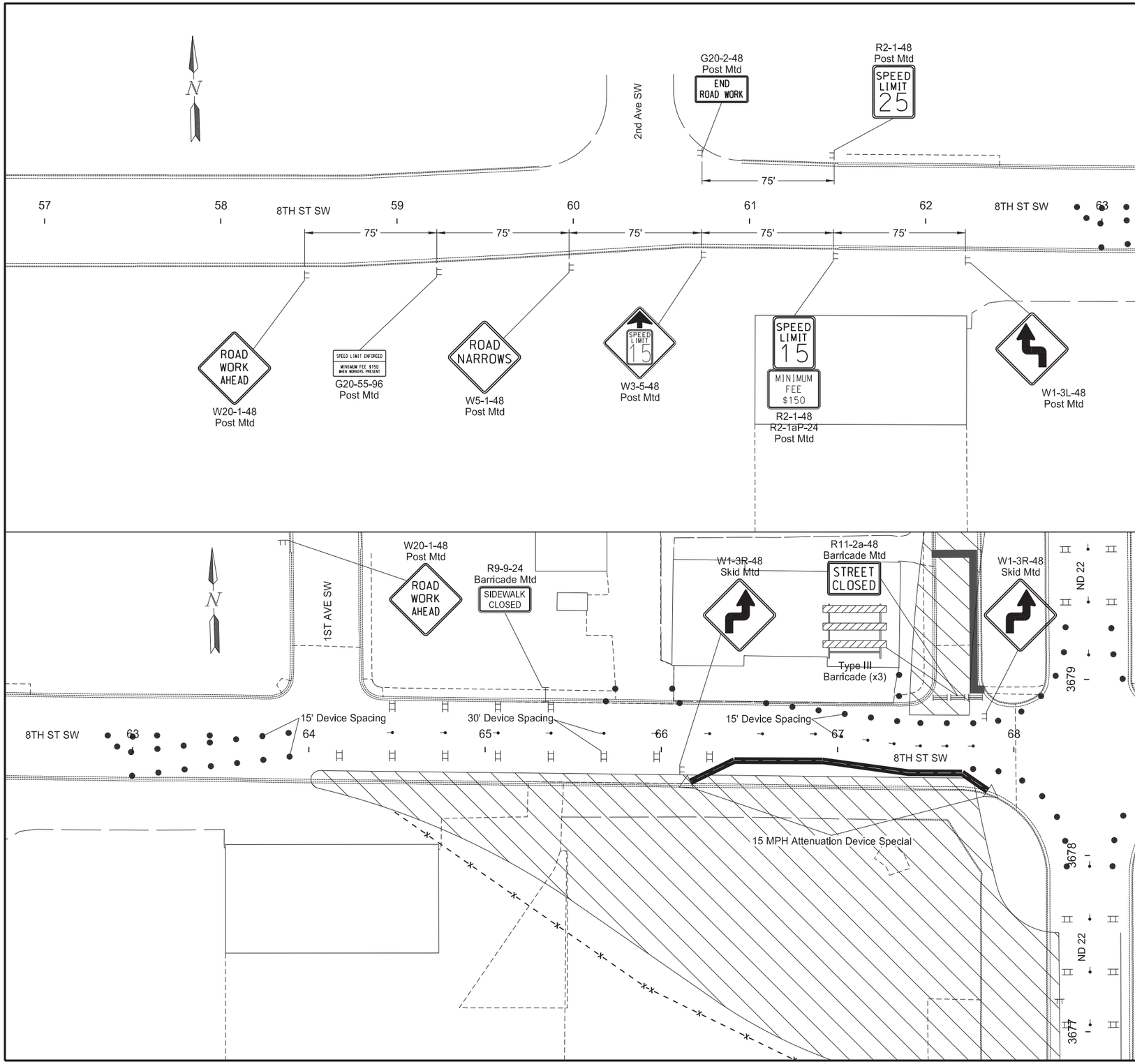

LEGEND

- Stackable Vertical Panel
- Delineator Drum
- Tubular Marker
- Safety Fence
- Barrier
- Work Zone
- Temporary Pedestrian Walkway

Work Zone Traffic Control

Phase 1

ND 22 & 8th St S Intersection
8th St SW - 2nd Ave SW to ND 22

Sta 57+25 to Sta 68+25
(SL8)

REGISTERED PROFESSIONAL ENGINEER
JASON P GULLICKS
PE-4792
DATE 2025.12.17
19:23:22 -06'00'
NORTH DAKOTA

STATE	PROJECT NO.	SECTION NO.	SHEET NO.
ND	HEN-5-022(144)069	100	19

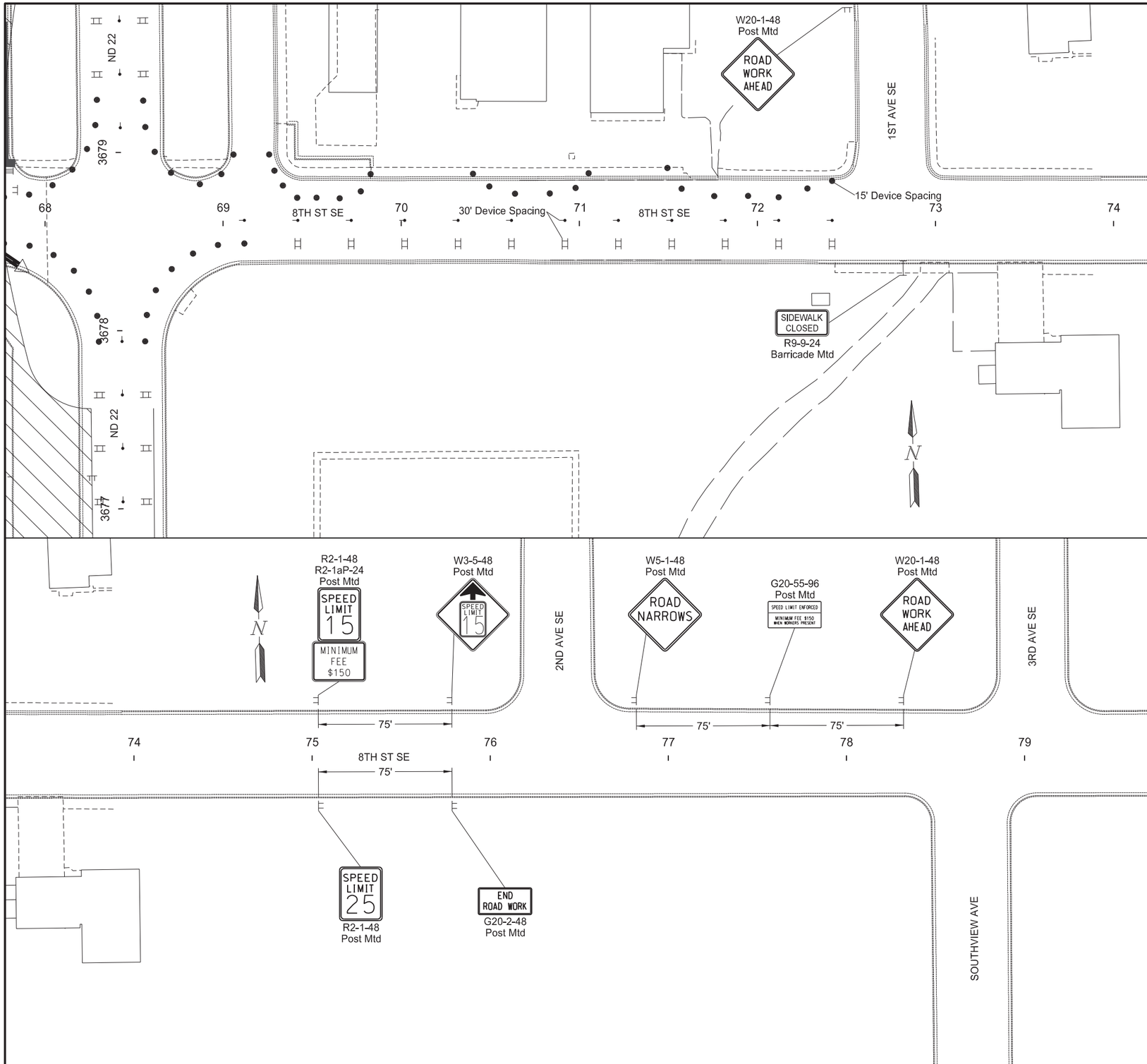

LEGEND

- Stackable Vertical Panel
- Delineator Drum
- Tubular Marker
- Safety Fence
- Barrier
- Work Zone
- Temporary Pedestrian Walkway

Work Zone Traffic Control

Phase 1

ND 22 & 8th St S Intersection
8th St SE - ND 22 to 2nd St SE

Sta 68+25 to Sta 79+25
(SL8)

REGISTERED PROFESSIONAL ENGINEER
JASON P GULLICKS
PE-4792
DATE 2025.12.17 19:23:41 -06'00'
NORTH DAKOTA

STATE	PROJECT NO.	SECTION NO.	SHEET NO.
ND	HEN-5-022(144)069	100	20

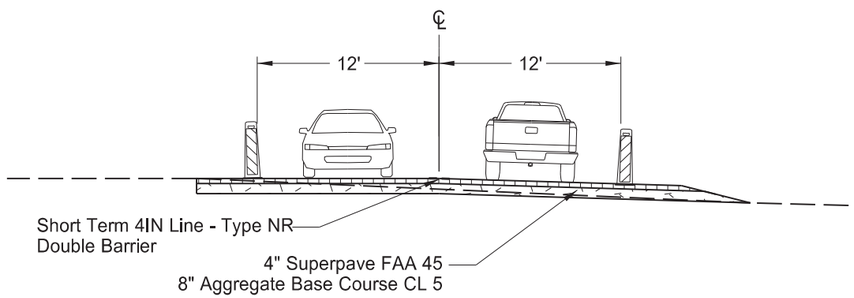

Temporary Bypass Road
OL_Bypass_W
Sta 102+40 to Sta 106+00 - 32' TOP Width
Sta 107+65 to Sta 109+85 - 30' TOP Width
OL_Bypass_S_1
Sta 201+20 to Sta 204+60 - 35' TOP Width

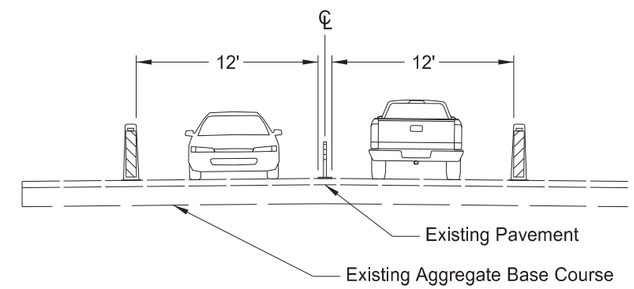

Bypass Route - Existing Pavement
Back to Back Panels on Both Sides
OL_Bypass_W
Sta 100+50 to Sta 102+40 - 26' TOP Width
Sta 106+00 to Sta 107+65 - 24' TOP Width
Sta 109+85 to Sta 112+00 - 24' TOP Width
OL_Bypass_S_1
Sta 200+00 to Sta 201+20 - 28' TOP Width

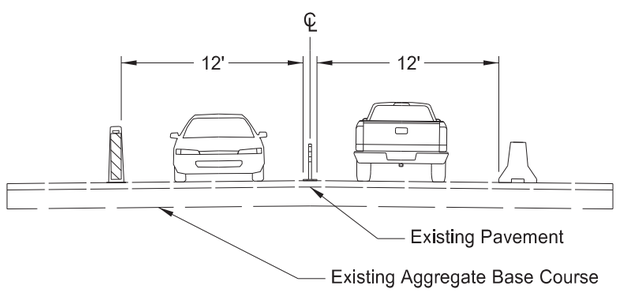

Bypass Route - Existing Pavement
Back to Back Panels LT and Barriers RT
OL_Bypass_W
Sta 106+10 to Sta 106+60

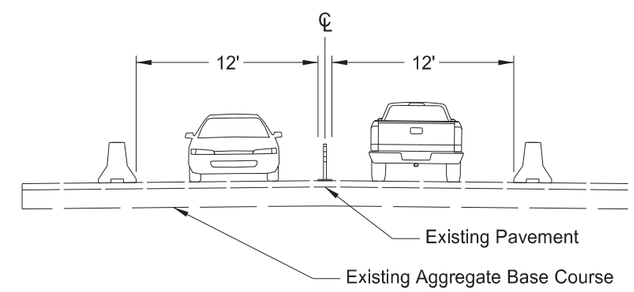

Bypass Route - Existing Pavement
Barriers on Both Sides
OL_Bypass_S_1
Sta 204+60 to Sta 205+35

Traffic Sequencing

ND 22 & 8th St S Intersection

Phase 2 Typical Sections

REGISTERED PROFESSIONAL ENGINEER
JASON P GULLICKS
PE-4792
DATE 2025.12.17 19:23:59 -06'00'
NORTH DAKOTA

STATE	PROJECT NO.	SECTION NO.	SHEET NO.
ND	HEN-5-022(144)069	100	21

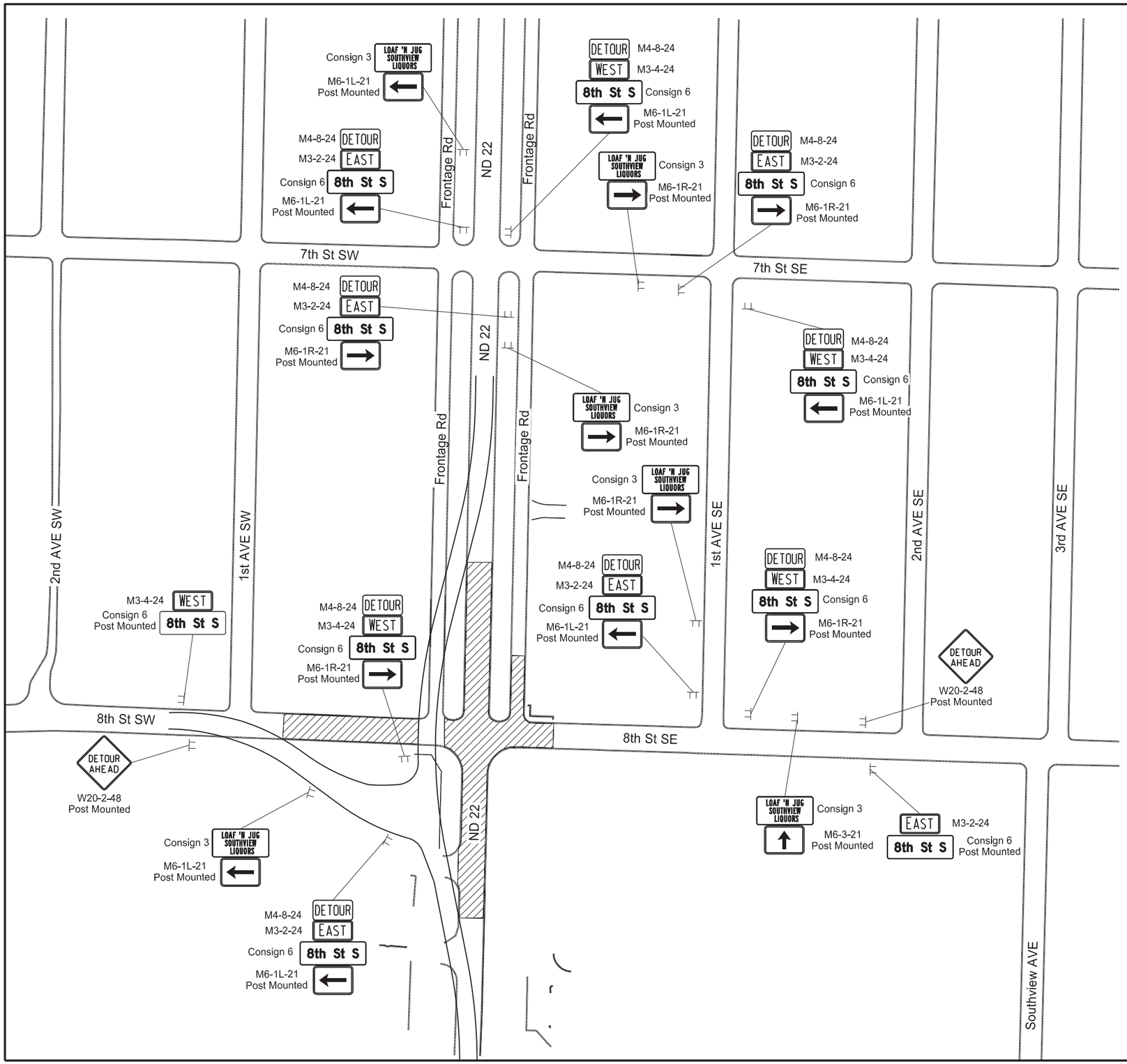

Legend

Roadway Closed

Phase 2

Local Detour Route

ND 22 & 8th St S Intersection

REGISTERED PROFESSIONAL ENGINEER
JASON P GULLICKS
PE-4792
DATE 2025.12.17
19:24:17 -06'00'
NORTH DAKOTA

STATE	PROJECT NO.	SECTION NO.	SHEET NO.
ND	HEN-5-022(144)069	100	22

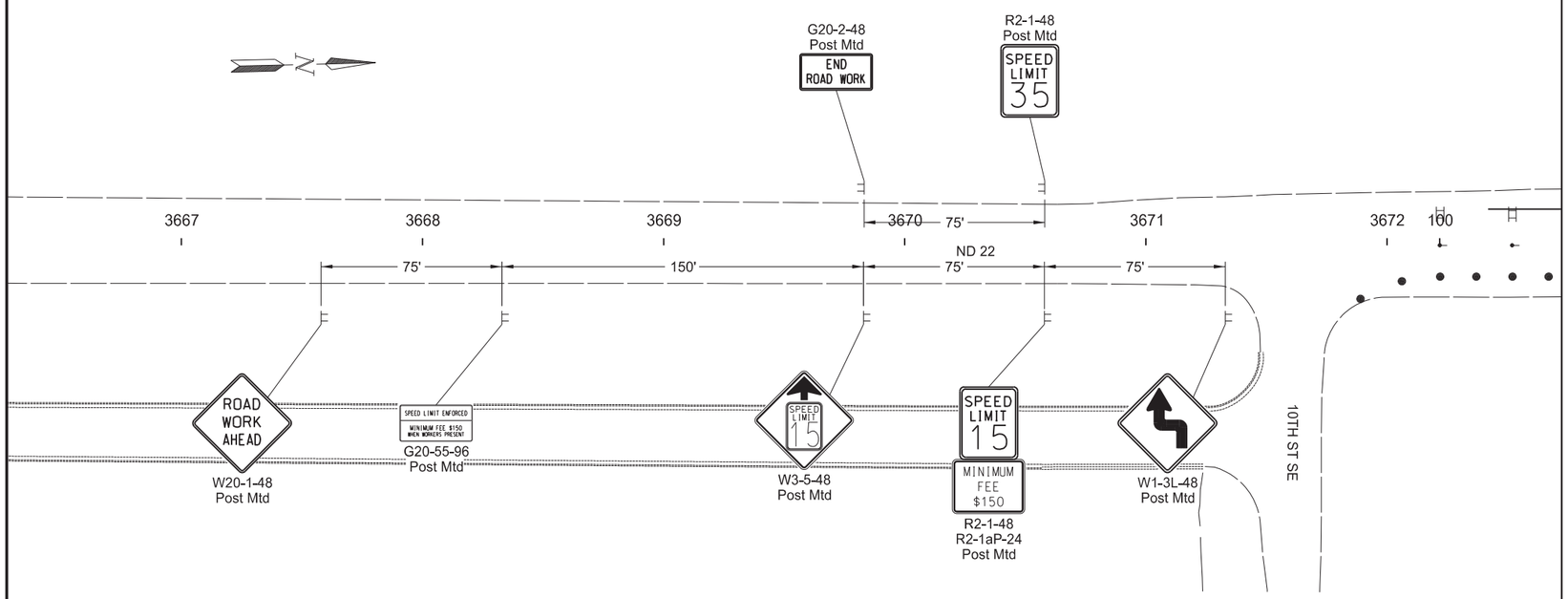

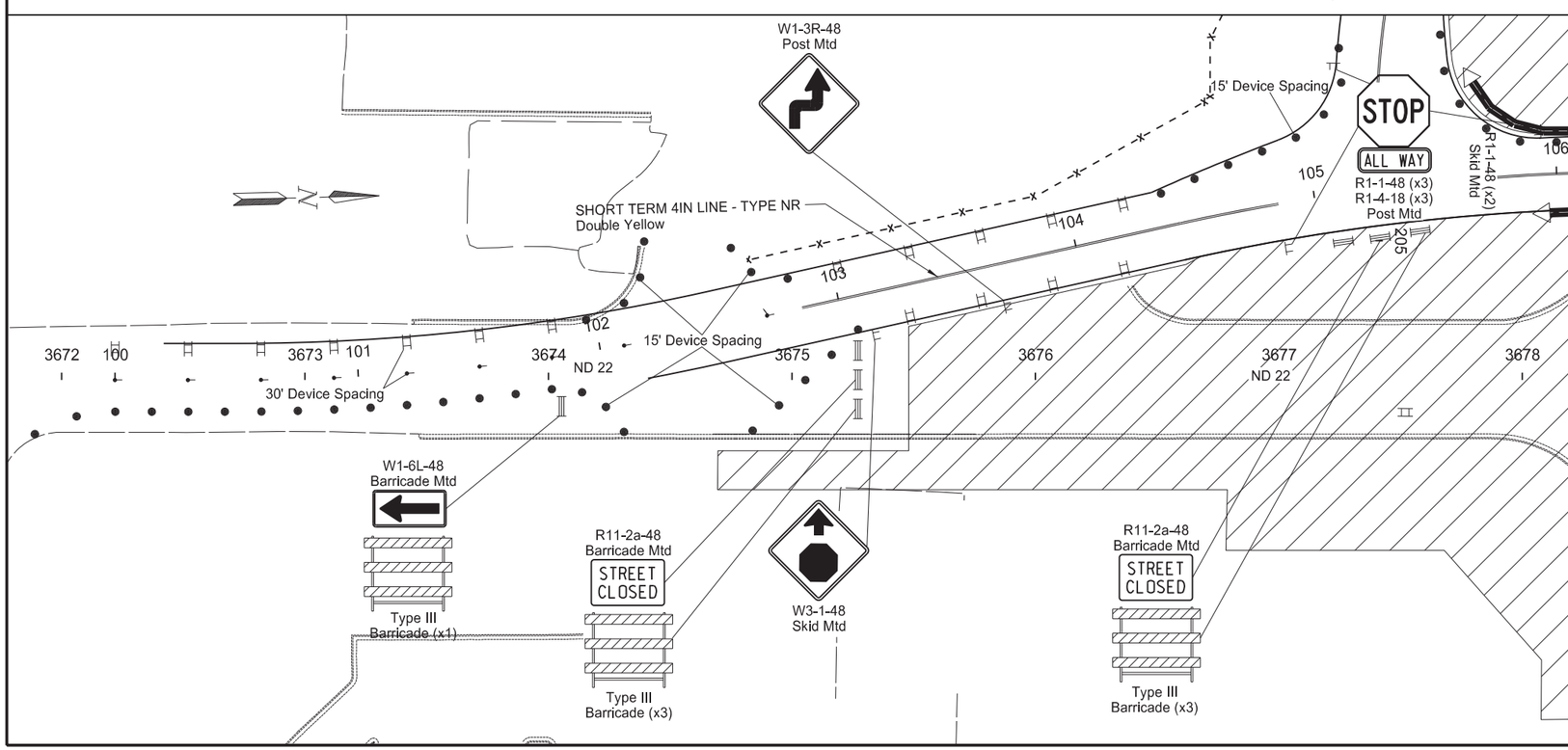

LEGEND

- Stackable Vertical Panel
- Delineator Drum
- Tubular Marker
- Safety Fence
- Barrier
- Work Zone
- Temporary Pedestrian Walkway

Work Zone Traffic Control

Phase 2

ND 22 & 8th St S Intersection
ND 22 - 11th St SE to 8th St SE

Sta 3666+75 to Sta 3677+75
(SCL22)

REGISTERED PROFESSIONAL ENGINEER
JASON P GULLICKS
PE-4792
DATE 2025.12.17
19:24:35 -06'00'
NORTH DAKOTA

STATE	PROJECT NO.	SECTION NO.	SHEET NO.
ND	HEN-5-022(144)069	100	23

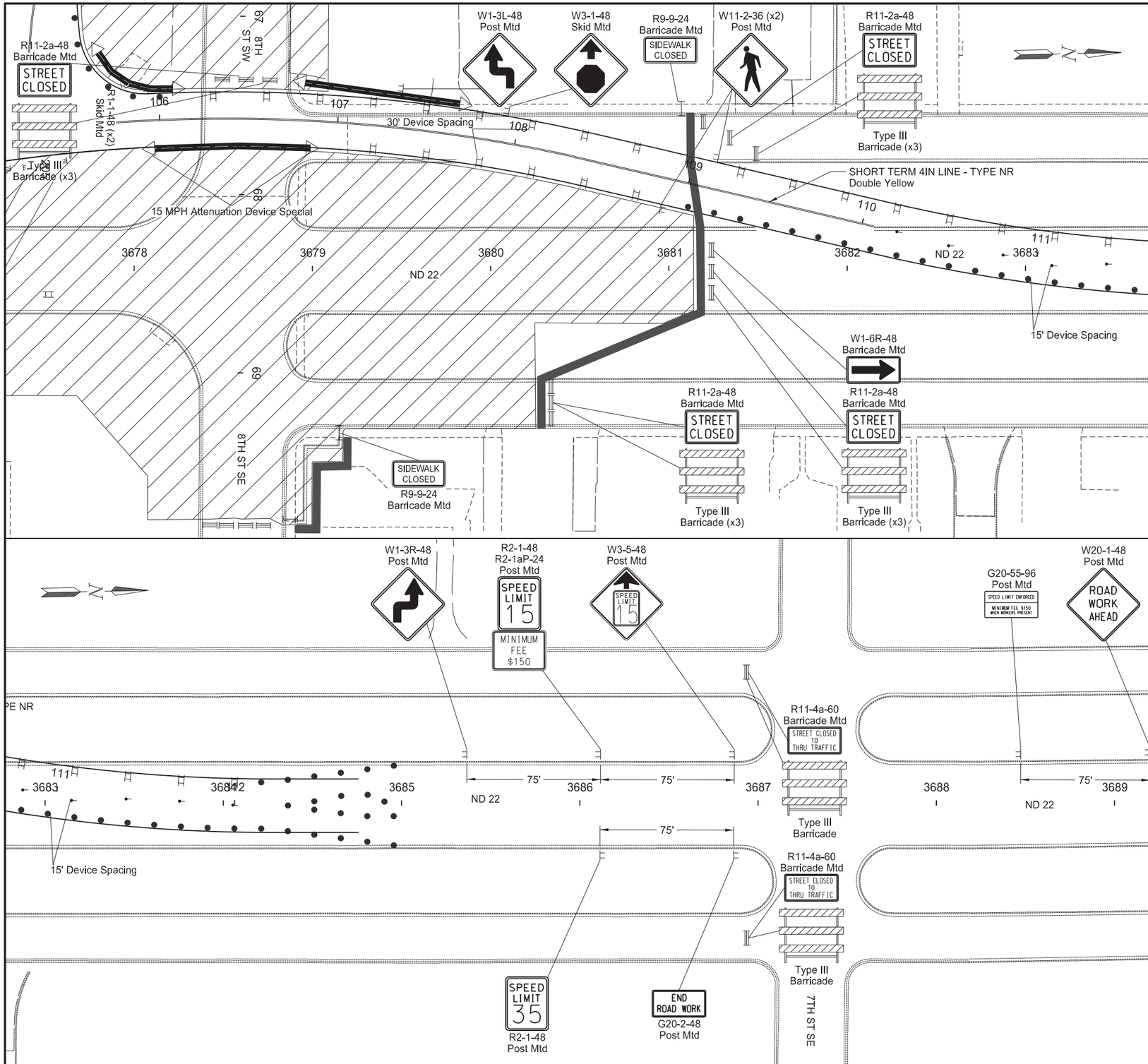

LEGEND

- Stackable Vertical Panel
- Delineator Drum
- Tubular Marker
- Safety Fence
- Barrier
- Work Zone
- Temporary Pedestrian Walkway

Work Zone Traffic Control

Phase 2

ND 22 & 8th St S Intersection
ND 22 - 8th St SE to 7th St SE

Sta 3677+75 to Sta 3688+75
(SCL22)

REGISTERED PROFESSIONAL ENGINEER
JASON P GULLICKS
PE-4792
DATE 2025.12.17 19:24:55 -06'00'
NORTH DAKOTA

STATE	PROJECT NO.	SECTION NO.	SHEET NO.
ND	HEN-5-022(144)069	100	24

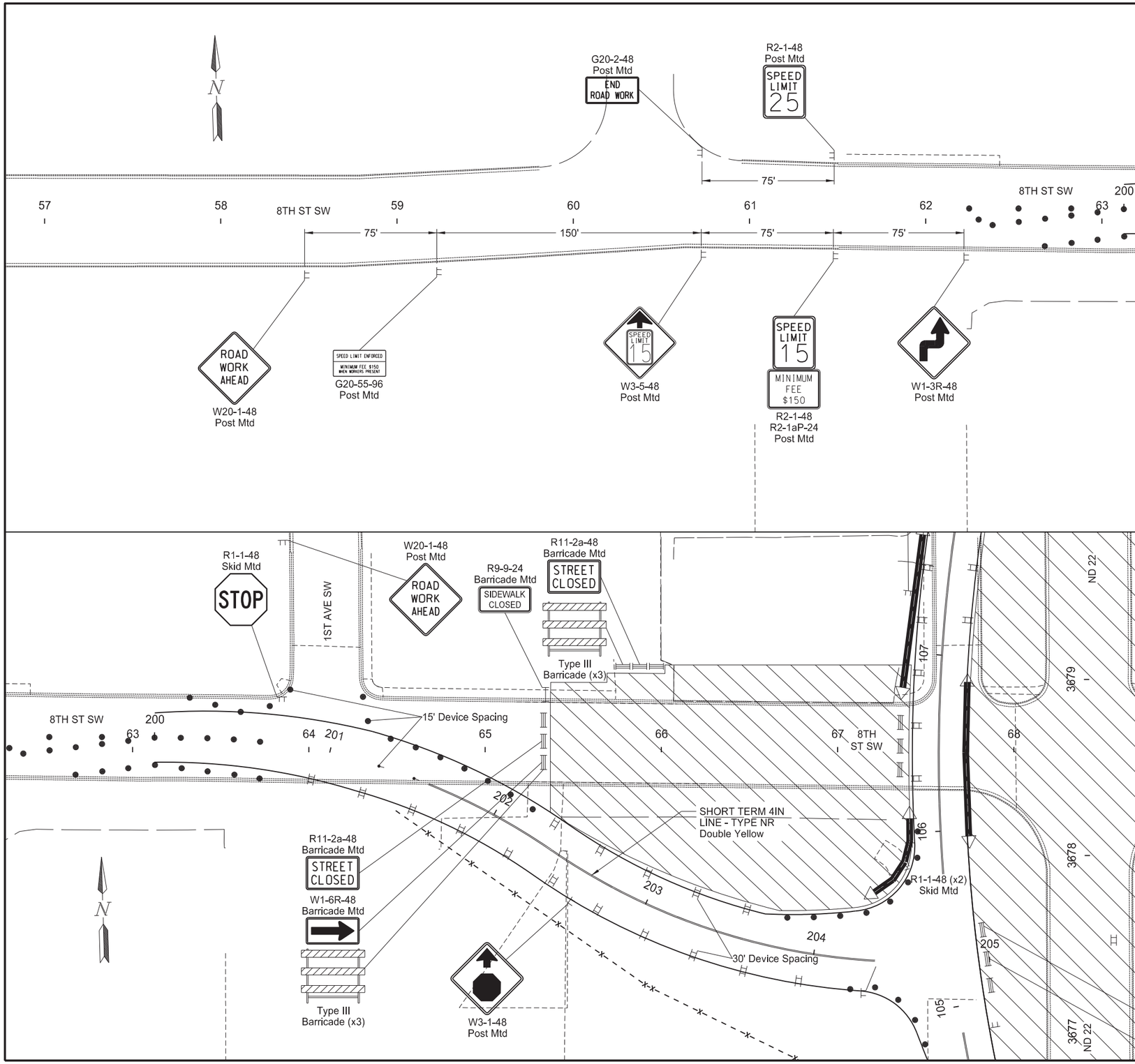

LEGEND

- Stackable Vertical Panel
- Delineator Drum
- Tubular Marker
- Safety Fence
- Barrier
- Work Zone
- Temporary Pedestrian Walkway

Work Zone Traffic Control

Phase 2

ND 22 & 8th St S Intersection
8th St SW - 2nd Ave SW to ND 22

Sta 57+25 to Sta 68+25
(SL8)

REGISTERED PROFESSIONAL ENGINEER
JASON P GULLICKS
PE-4792
DATE 2025.12.17 19:25:15 -06'00'
NORTH DAKOTA

STATE	PROJECT NO.	SECTION NO.	SHEET NO.
ND	HEN-5-022(144)069	100	25

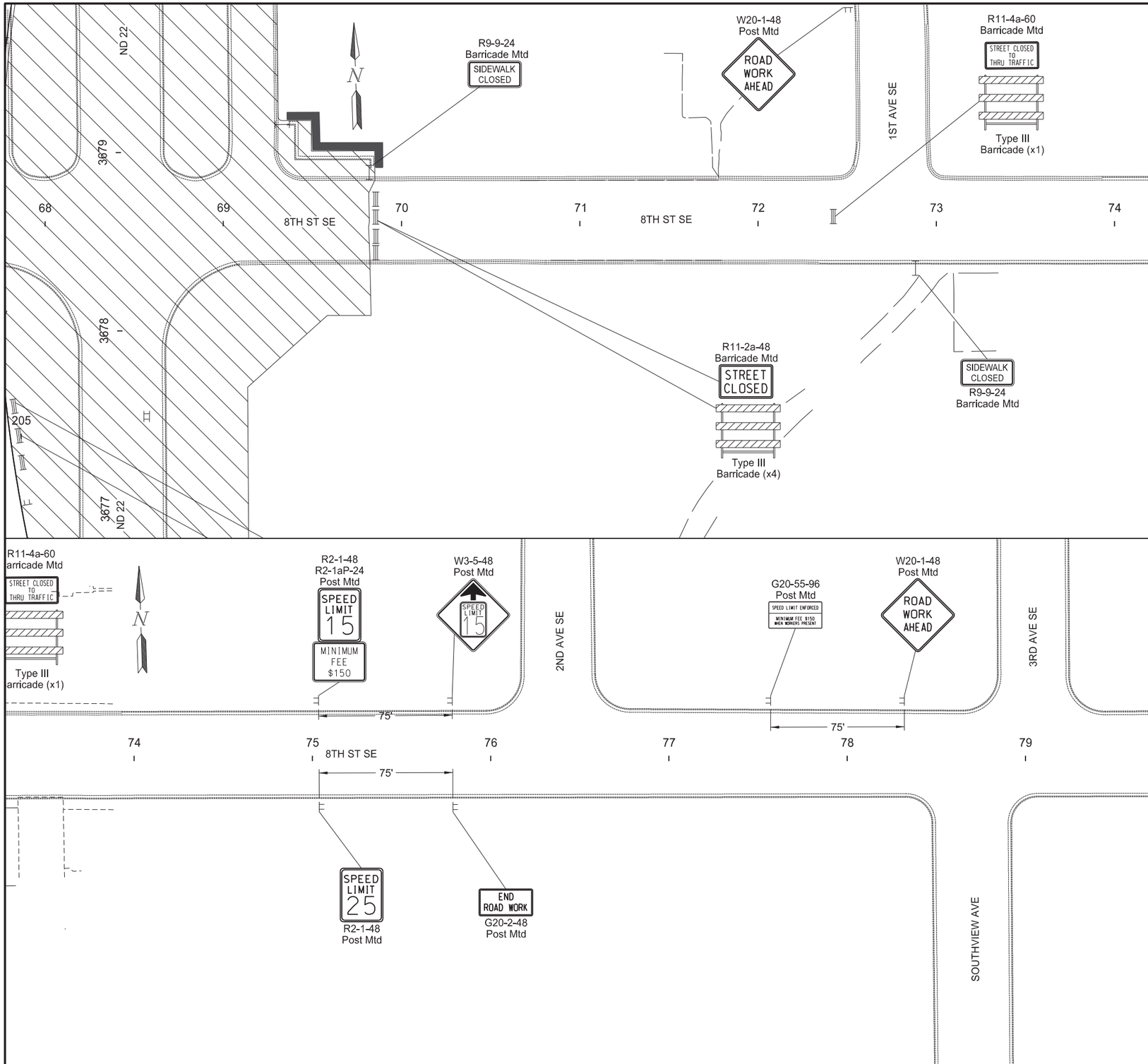

LEGEND

- Stackable Vertical Panel
- Delineator Drum
- Tubular Marker
- Safety Fence
- Barrier
- Work Zone
- Temporary Pedestrian Walkway

Work Zone Traffic Control

Phase 2

ND 22 & 8th St S Intersection
8th St SE - ND 22 to 2nd St SE

Sta 68+25 to Sta 79+25
(SL8)

REGISTERED PROFESSIONAL ENGINEER
JASON P GULLICKS
PE-4792
DATE 2025.12.17 19:25:33 -06'00'
NORTH DAKOTA

STATE	PROJECT NO.	SECTION NO.	SHEET NO.
ND	HEN-5-022(144)069	100	26

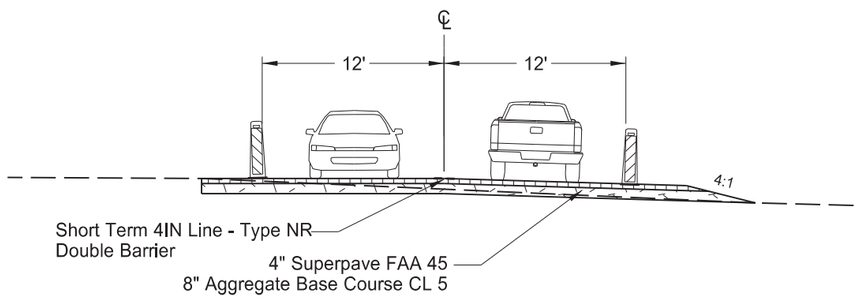

Temporary Bypass Road
OL_Bypass_W
Sta 102+40 to Sta 106+00 - 32' TOP Width
Sta 107+65 to Sta 109+85 - 30' TOP Width
OL_Bypass_S_2
Sta 301+20 to Sta 304+80 - 35' TOP Width

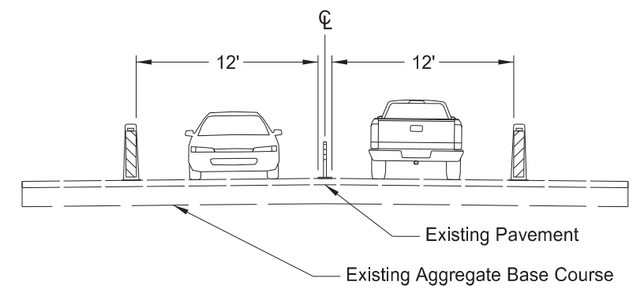

Bypass Route - Existing Pavement
Back to Back Panels on Both Sides
OL_Bypass_W
Sta 100+50 to Sta 102+40 - 26' TOP Width
Sta 106+00 to Sta 107+65 - 24' TOP Width
Sta 109+85 to Sta 112+00 - 24' TOP Width
OL_Bypass_S_2
Sta 300+00 to Sta 301+20 - 28' TOP Width

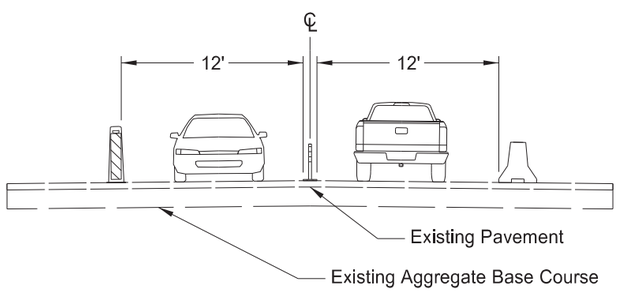

Bypass Route - Existing Pavement
Back to Back Panels LT and Barriers RT
OL_Bypass_W
Sta 106+10 to Sta 106+60

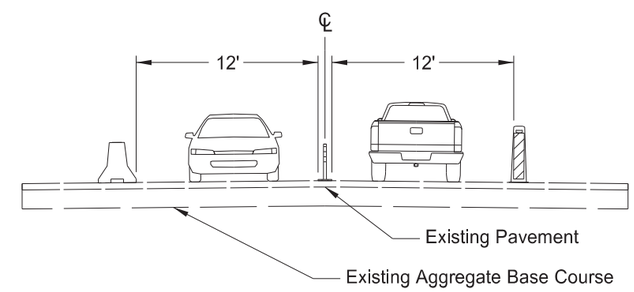

Bypass Route - Existing Pavement
Barriers LT and Back to Back Panels RT
OL_Bypass_S_2
Sta 304+80 to Sta 305+35

Traffic Sequencing

ND 22 & 8th St S Intersection

Phase 3 Typical Sections

REGISTERED PROFESSIONAL ENGINEER
JASON P GULLICKS
PE-4792
DATE 2025.12.17
19:25:52 -06'00'
NORTH DAKOTA

STATE	PROJECT NO.	SECTION NO.	SHEET NO.
ND	HEN-5-022(144)069	100	27

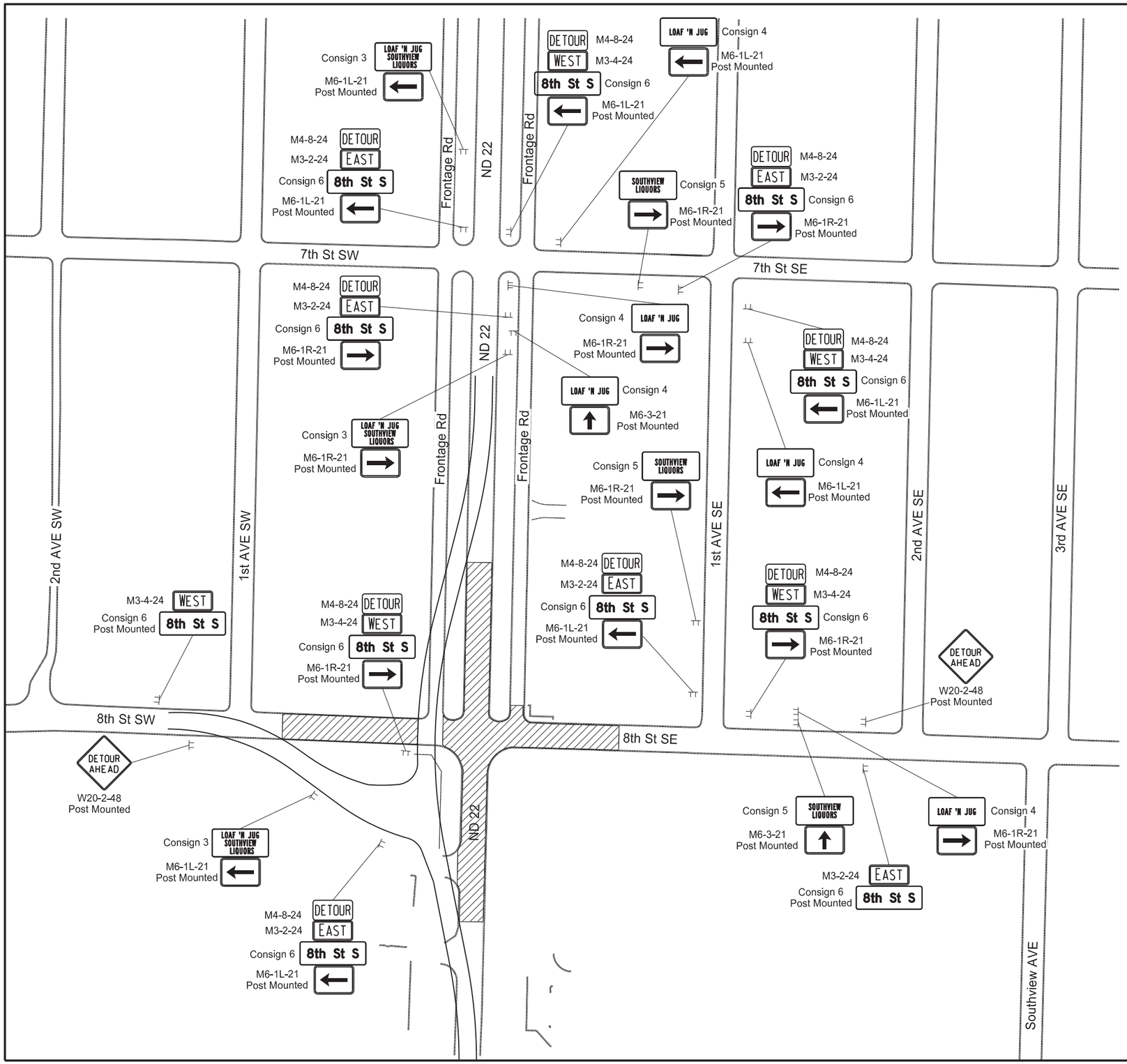

Legend

Roadway Closed

Phase 3

Local Detour Route

ND 22 & 8th St S Intersection

REGISTERED PROFESSIONAL ENGINEER
JASON P GULLICKS
PE-4792
DATE 2025.12.17
19:26:11 -06'00'
NORTH DAKOTA

STATE	PROJECT NO.	SECTION NO.	SHEET NO.
ND	HEN-5-022(144)069	100	28

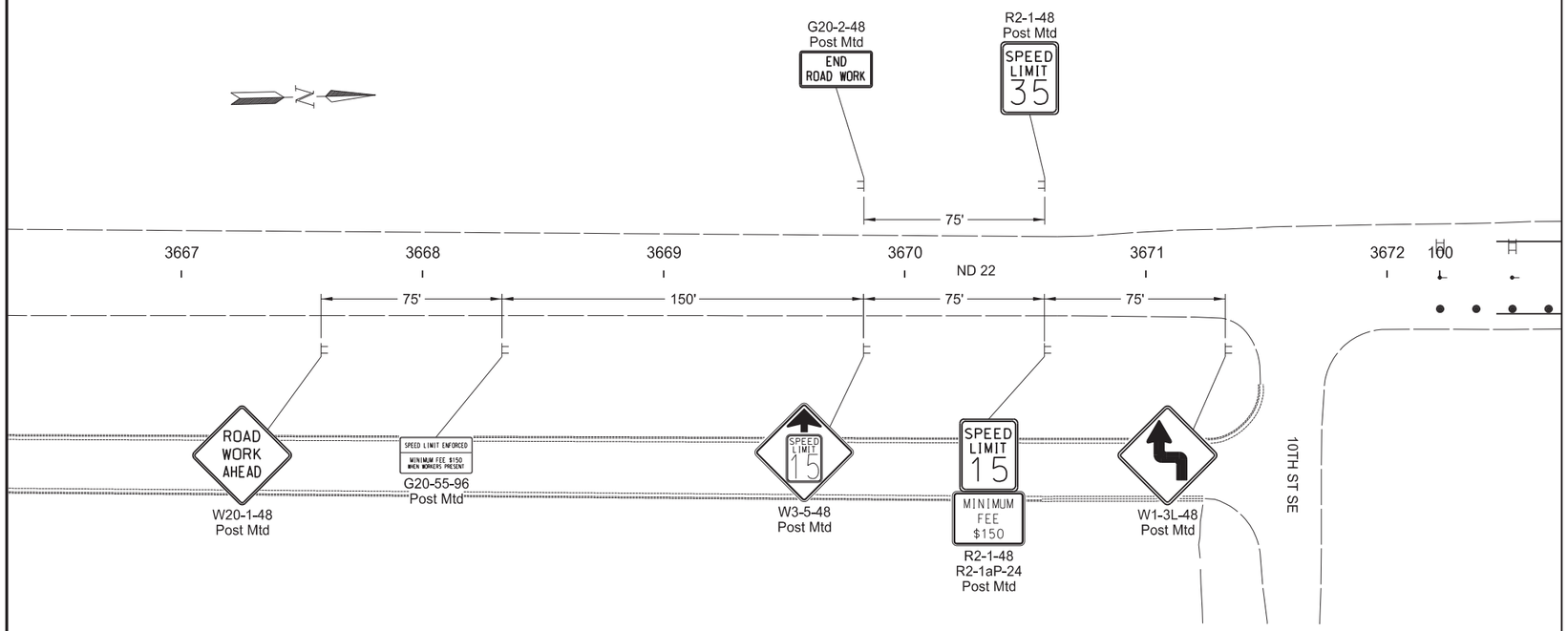

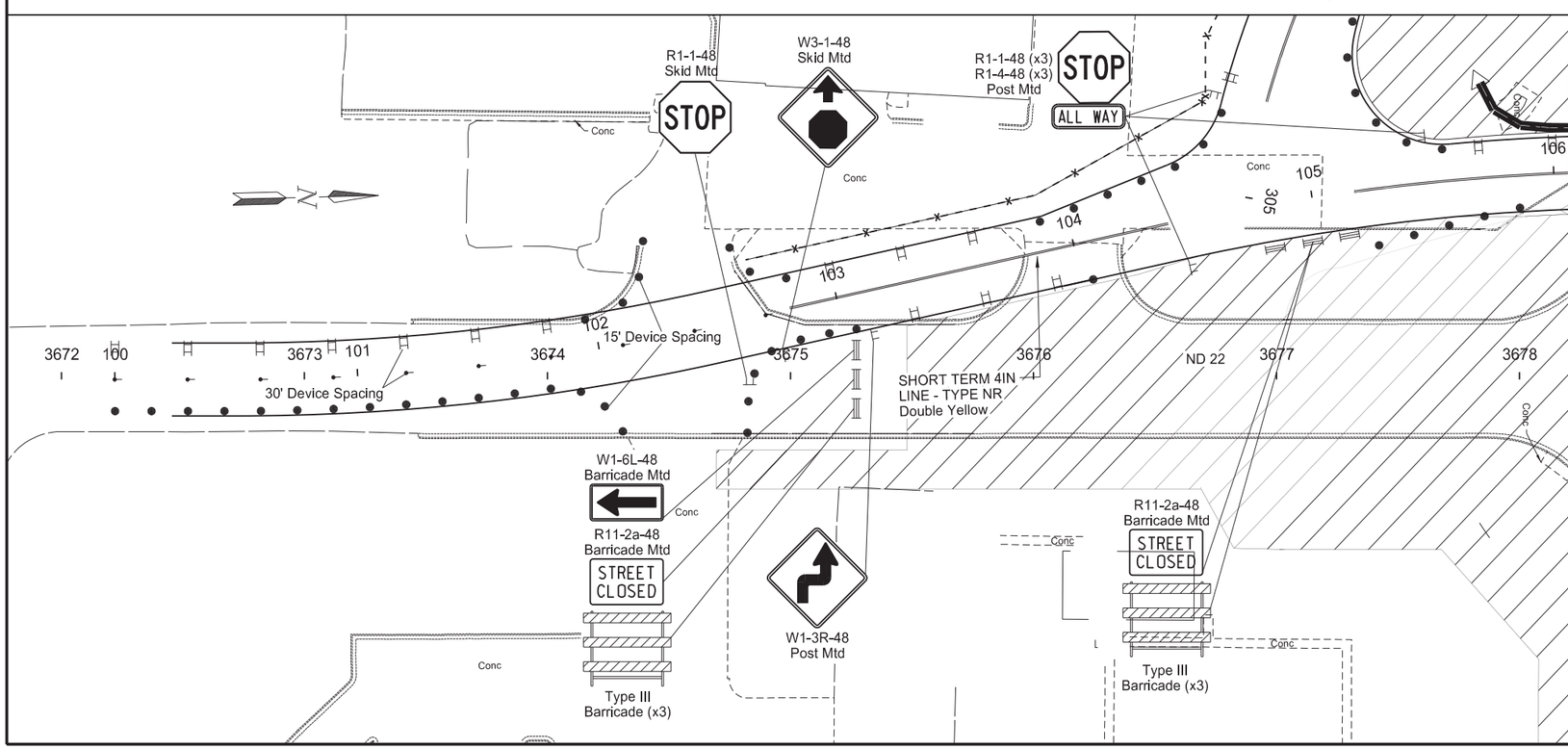

LEGEND

- Stackable Vertical Panel
- Delineator Drum
- Tubular Marker
- Safety Fence
- Barrier
- Work Zone
- Temporary Pedestrian Walkway

Work Zone Traffic Control

Phase 3

ND 22 & 8th St S Intersection
ND 22 - 11th St SE to 8th St SE

Sta 3666+75 to Sta 3677+75
(SCL22)

REGISTERED PROFESSIONAL ENGINEER
JASON P GULLICKS
PE-4792
DATE 2025.12.17
19:26:28 -06'00'
NORTH DAKOTA

STATE	PROJECT NO.	SECTION NO.	SHEET NO.
ND	HEN-5-022(144)069	100	29

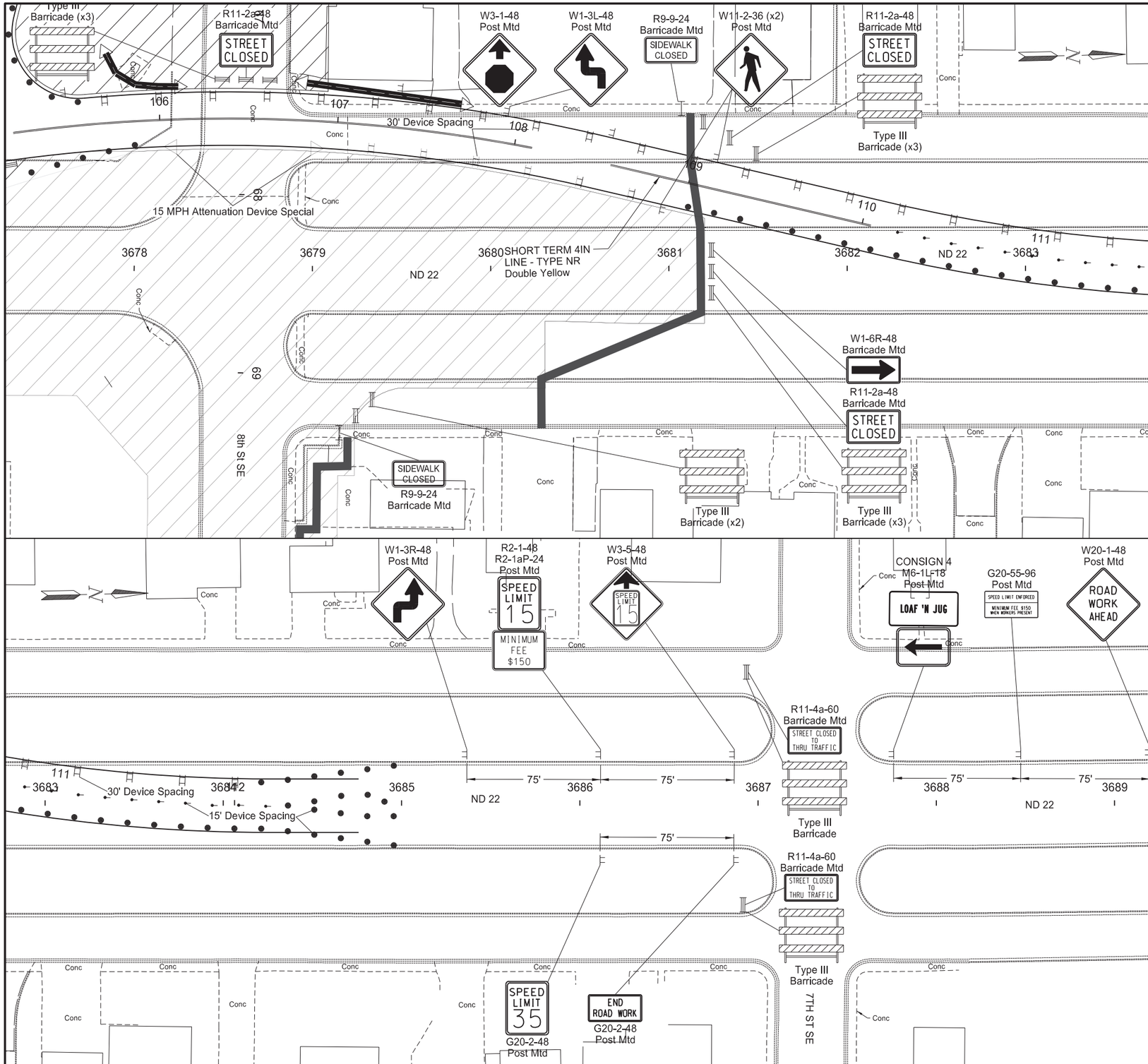

LEGEND

- Stackable Vertical Panel
- Delineator Drum
- Tubular Marker
- Safety Fence
- Barrier
- Work Zone
- Temporary Pedestrian Walkway

Work Zone Traffic Control

Phase 3

ND 22 & 8th St S Intersection
ND 22 - 8th St SE to 7th St SE

Sta 3677+75 to Sta 3688+75
(SCL22)

REGISTERED PROFESSIONAL ENGINEER
JASON P GULLICKS
PE-4792
DATE 2025.12.17 19:26:46 -06'00'
NORTH DAKOTA

STATE	PROJECT NO.	SECTION NO.	SHEET NO.
ND	HEN-5-022(144)069	100	30

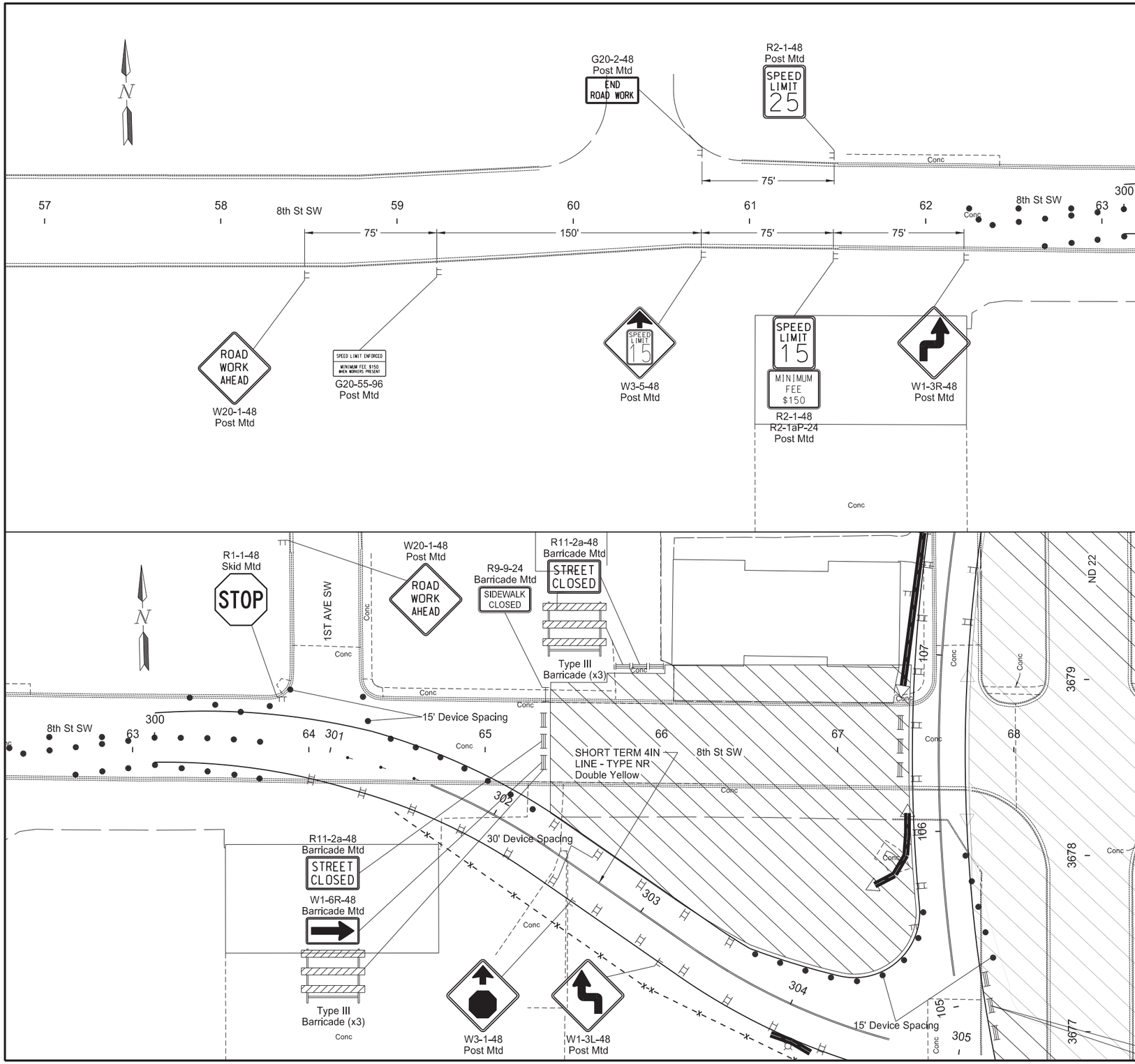

LEGEND

- Stackable Vertical Panel
- Delineator Drum
- Tubular Marker
- Safety Fence
- Barrier
- Work Zone
- Temporary Pedestrian Walkway

Work Zone Traffic Control

Phase 3

ND 22 & 8th St S Intersection
8th St SW - 2nd Ave SW to ND 22

Sta 57+25 to Sta 68+25
(SL8)

REGISTERED PROFESSIONAL ENGINEER
JASON P GULLICKS
PE-4792
DATE 2025.12.17 19:27:07 -06'00'
NORTH DAKOTA

STATE	PROJECT NO.	SECTION NO.	SHEET NO.
ND	HEN-5-022(144)069	100	31

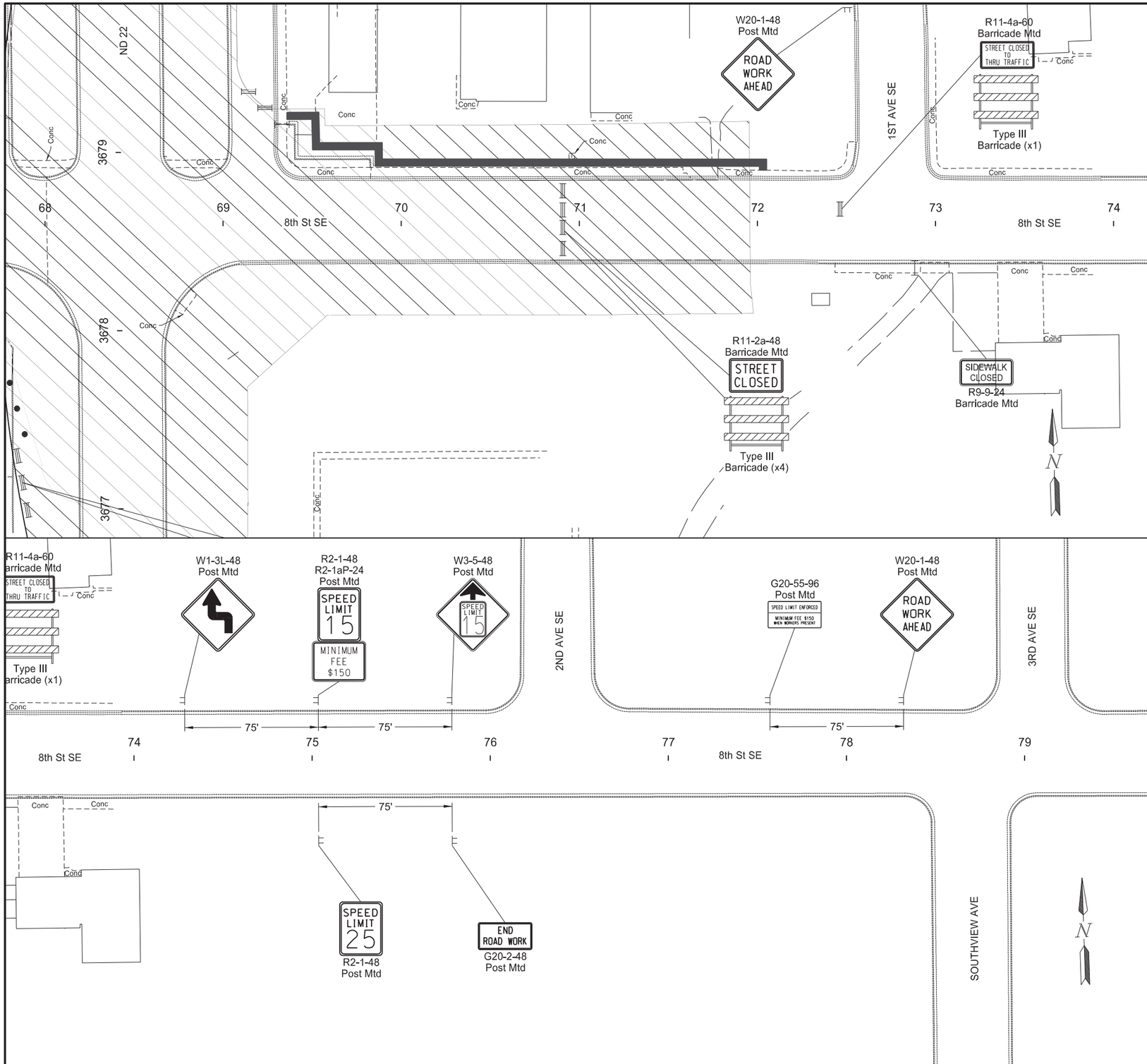

Notes:
1. Maintain Access during the roadway reconstruction to Southview Liquors (between Sta 71+00 and 72+00) from 1st Ave SE using delineator drums and tubular markers. 30 delineator drums and 15 tubular markers have been included for this.

LEGEND

- Stackable Vertical Panel
- Delineator Drum
- Tubular Marker
- Safety Fence
- Barrier
- Work Zone
- Temporary Pedestrian Walkway

Work Zone Traffic Control

Phase 3

ND 22 & 8th St S Intersection
8th St SE - ND 22 to 2nd St SE

Sta 68+25 to Sta 79+25
(SL8)

REGISTERED PROFESSIONAL ENGINEER
JASON P GULLICKS
PE-4792
DATE 2025.12.17 19:27:45 -06'00'
NORTH DAKOTA

STATE	PROJECT NO.	SECTION NO.	SHEET NO.
ND	HEN-5-022(144)069	100	32

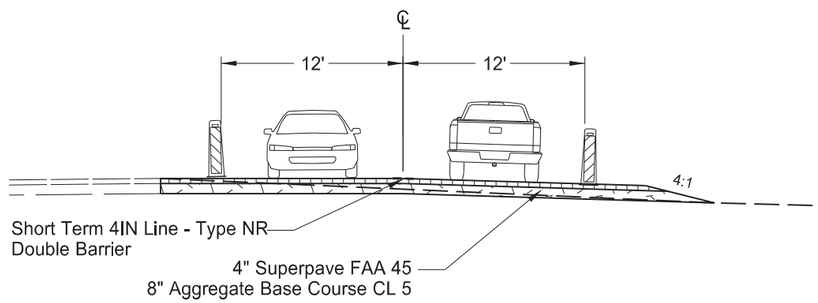

Temporary Bypass Road
OL_Bypass_S_2
Sta 301+20 to Sta 304+80

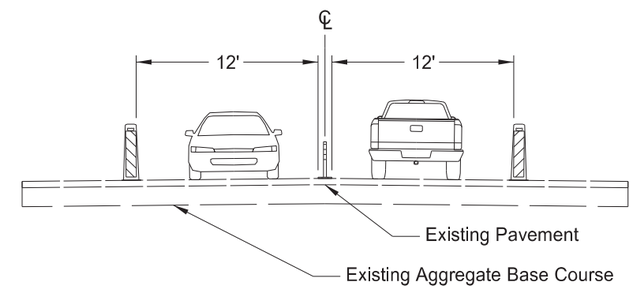

Bypass Route - Existing Pavement
Back to Back Panels on Both Sides
OL_Bypass_S_2
Sta 300+00 to Sta 301+20

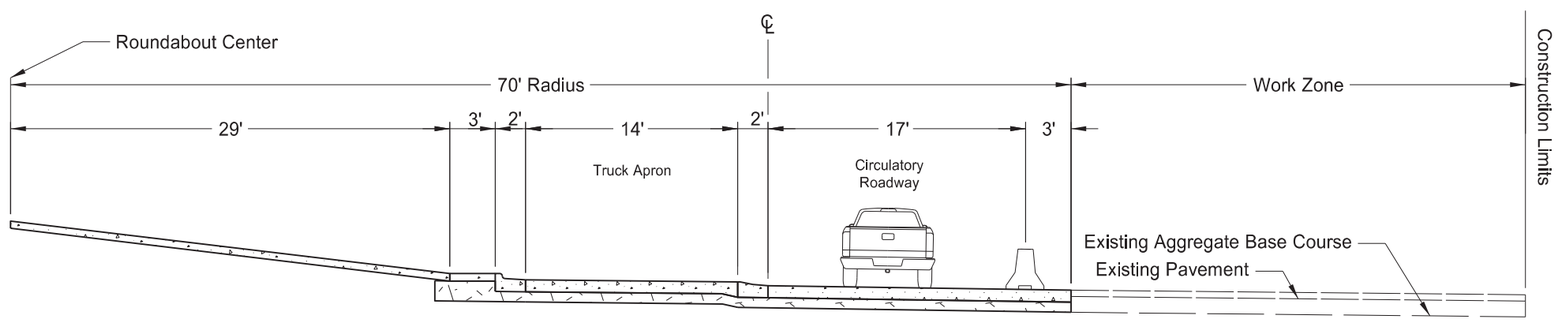

Bypass Route - New Roundabout
Barriers on Outside
RB_Cen
Sta 2+35 to Sta 3+00

Traffic Sequencing

ND 22 & 8th St S Intersection

Phase 4 Typical Sections

REGISTERED PROFESSIONAL ENGINEER
JASON P GULLICKS
PE-4792
DATE 2025.12.17
19:28:55 -06'00'
NORTH DAKOTA

STATE	PROJECT NO.	SECTION NO.	SHEET NO.
ND	HEN-5-022(144)069	100	33

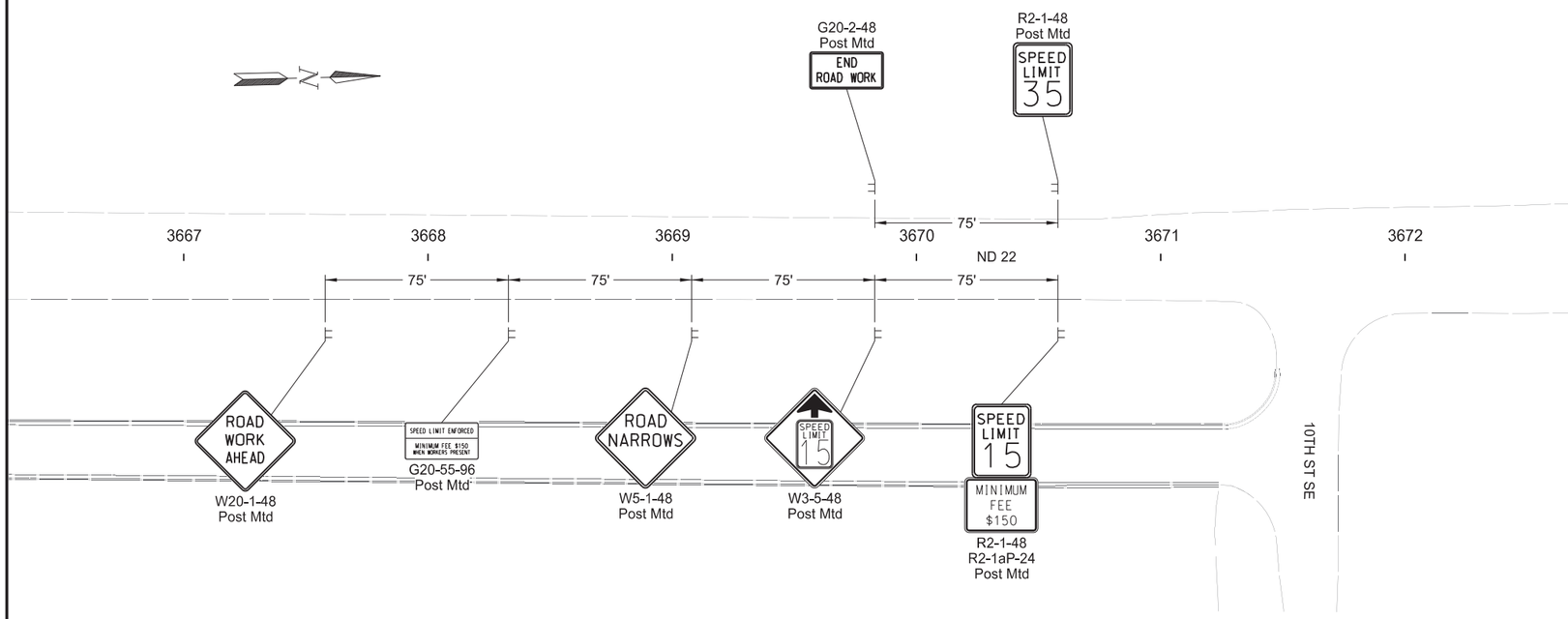

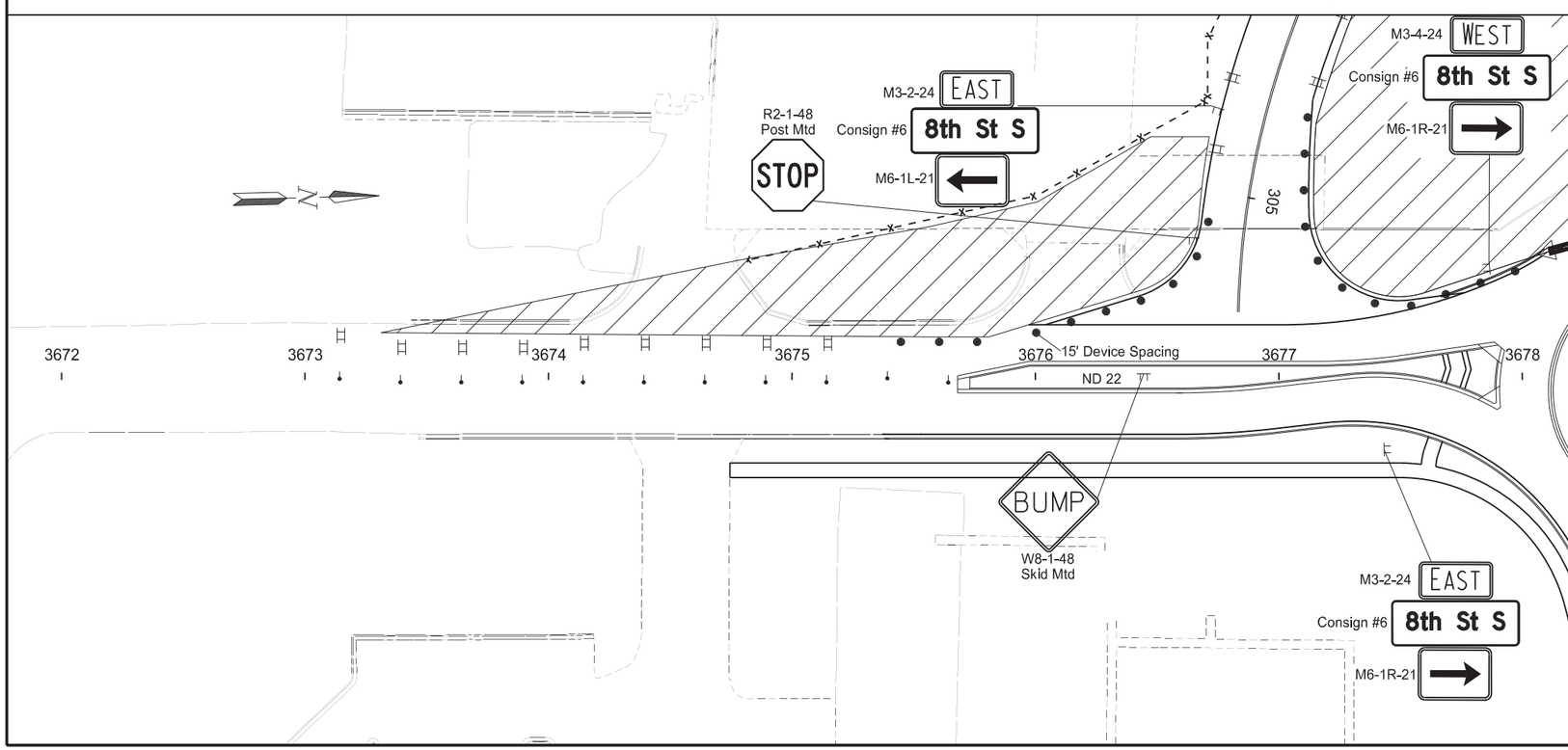

LEGEND

- Stackable Vertical Panel
- Delineator Drum
- Tubular Marker
- Safety Fence
- Barrier
- Work Zone
- Temporary Pedestrian Walkway

Work Zone Traffic Control

Phase 4

ND 22 & 8th St S Intersection
ND 22 - 11th St SE to 8th St SE

Sta 3666+75 to Sta 3677+75
(SCL22)

REGISTERED PROFESSIONAL ENGINEER
JASON P GULLICKS
PE-4792
DATE 2025.12.17
19:29:21 -06'00'
NORTH DAKOTA

STATE	PROJECT NO.	SECTION NO.	SHEET NO.
ND	HEN-5-022(144)069	100	34

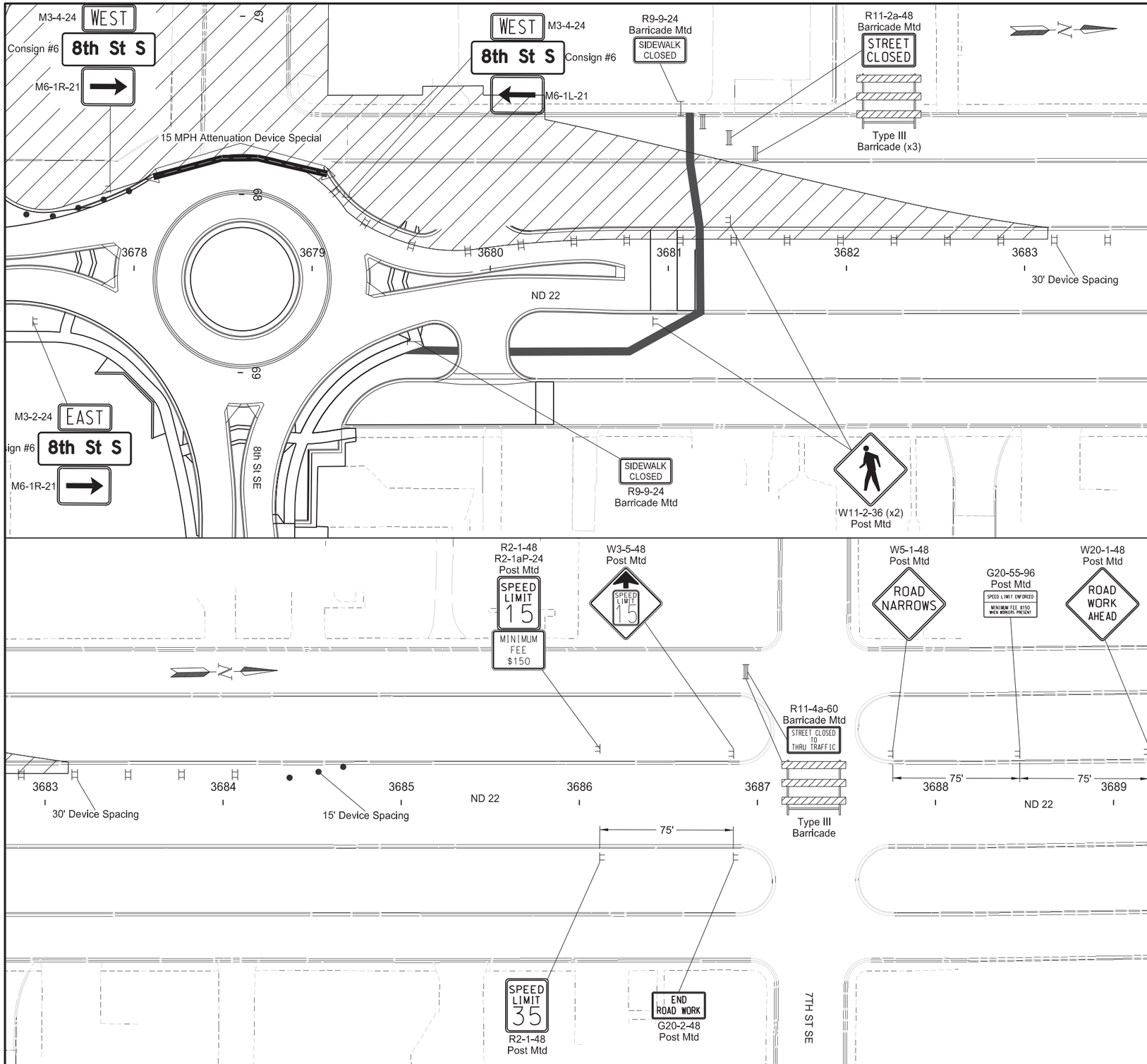

LEGEND

- Stackable Vertical Panel
- Delineator Drum
- Tubular Marker
- Safety Fence
- Barrier
- Work Zone
- Temporary Pedestrian Walkway

Work Zone Traffic Control

Phase 4

ND 22 & 8th St S Intersection
ND 22 - 8th St SE to 7th St SE

Sta 3677+75 to Sta 3688+75
(SCL22)

REGISTERED PROFESSIONAL ENGINEER
JASON P GULLICKS
PE-4792
DATE 2025.12.17
19:29:46 -06'00'
NORTH DAKOTA

STATE	PROJECT NO.	SECTION NO.	SHEET NO.
ND	HEN-5-022(144)069	100	35

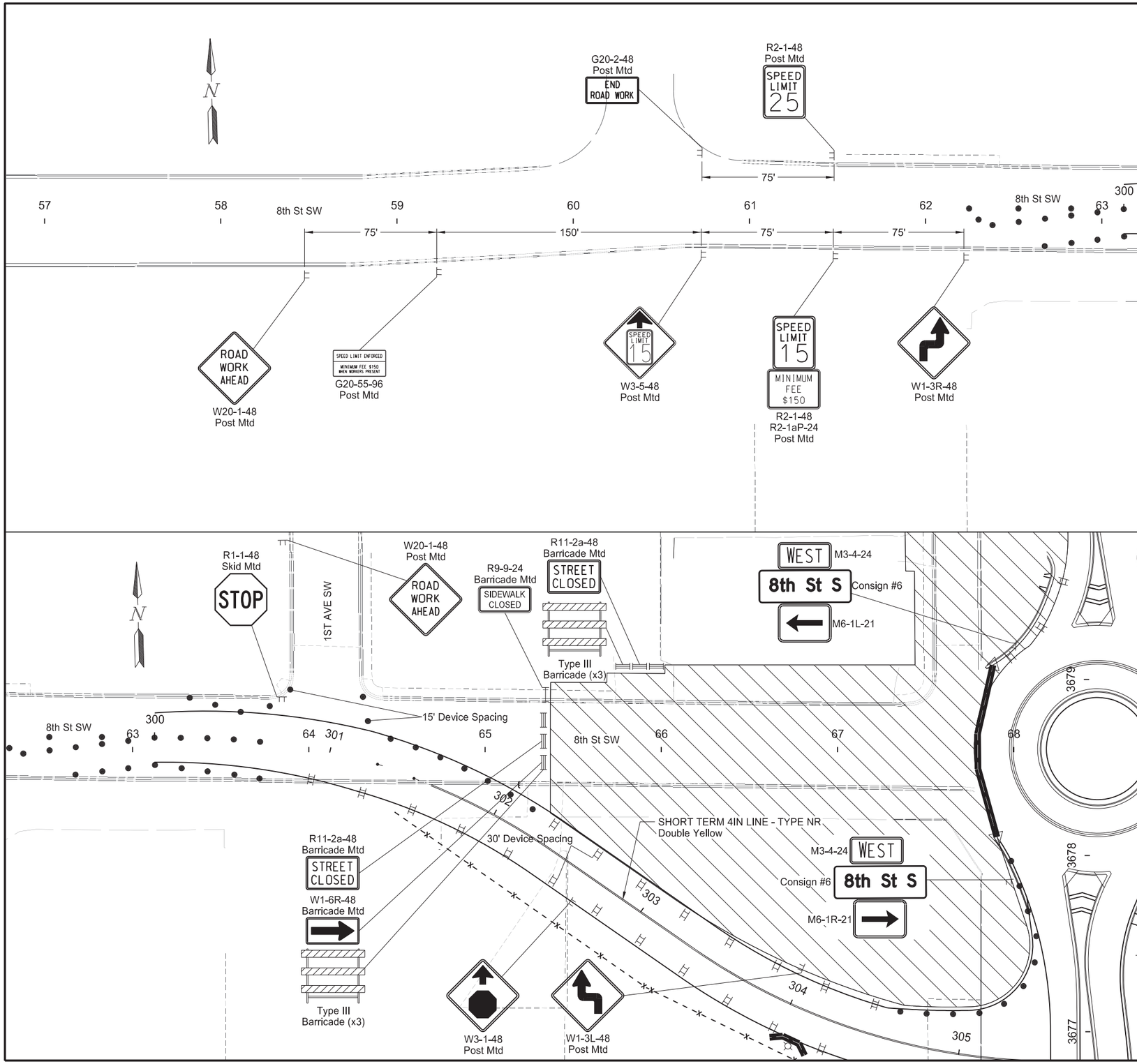

LEGEND

- Stackable Vertical Panel
- Delineator Drum
- Tubular Marker
- Safety Fence
- Barrier
- Work Zone
- Temporary Pedestrian Walkway

Work Zone Traffic Control

Phase 4

ND 22 & 8th St S Intersection
8th St SW - 2nd Ave SW to ND 22

Sta 57+25 to Sta 68+25
(SL8)

REGISTERED PROFESSIONAL ENGINEER
JASON P GULLICKS
PE-4792
DATE 2025.12.17
19:30:06 -06'00'
NORTH DAKOTA

STATE	PROJECT NO.	SECTION NO.	SHEET NO.
ND	HEN-5-022(144)069	100	36

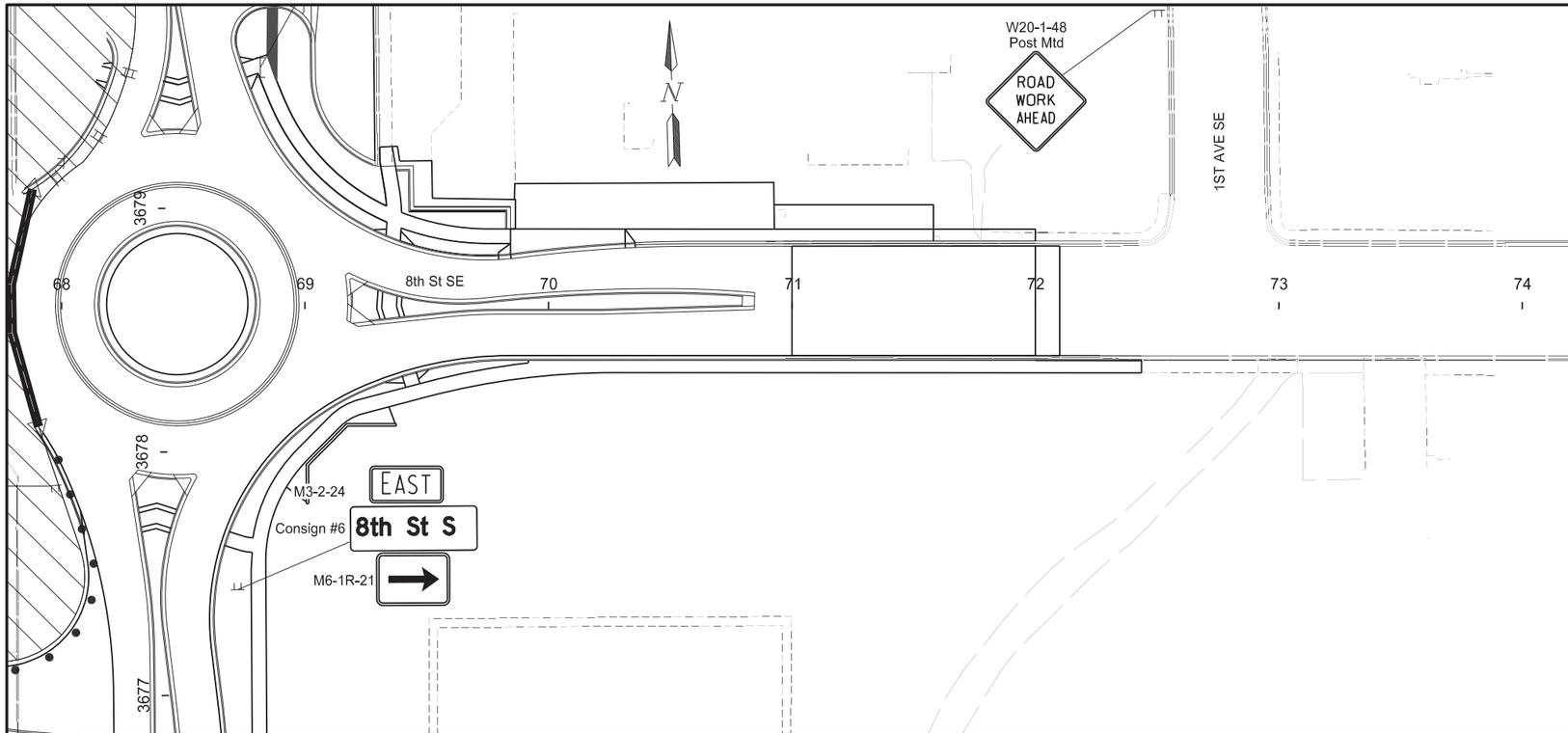

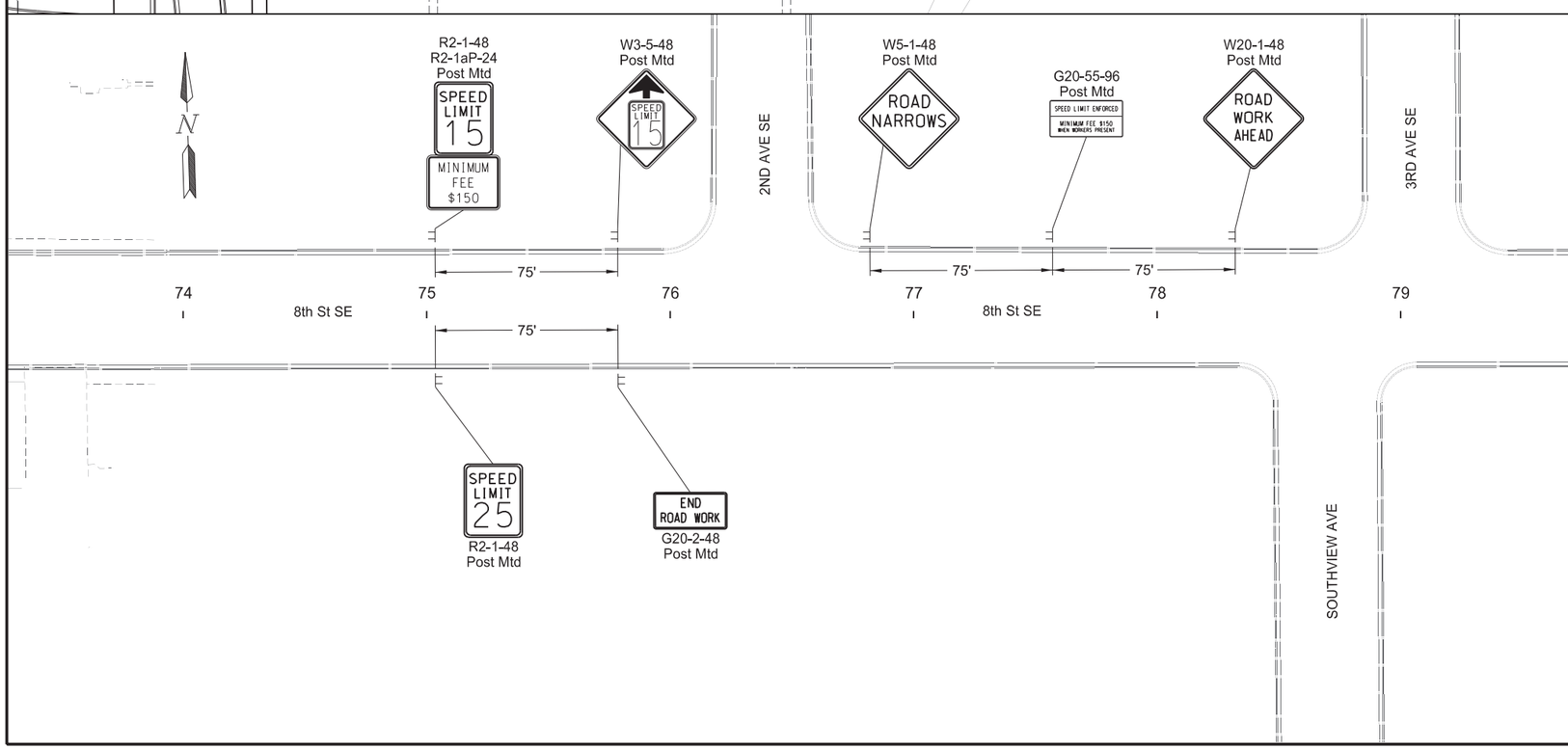

LEGEND

- Stackable Vertical Panel
- Delineator Drum
- Tubular Marker
- Safety Fence
- Barrier
- Work Zone
- Temporary Pedestrian Walkway

Work Zone Traffic Control

Phase 4

ND 22 & 8th St S Intersection
8th St SE - ND 22 to 2nd St SE

Sta 68+25 to Sta 79+25
(SL8)

REGISTERED PROFESSIONAL ENGINEER
JASON P GULLICKS
PE-4792
DATE 2025.12.17 19:30:25 -06'00'
NORTH DAKOTA

STATE	PROJECT NO.	SECTION NO.	SHEET NO.
ND	HEN-5-022(144)069	100	37

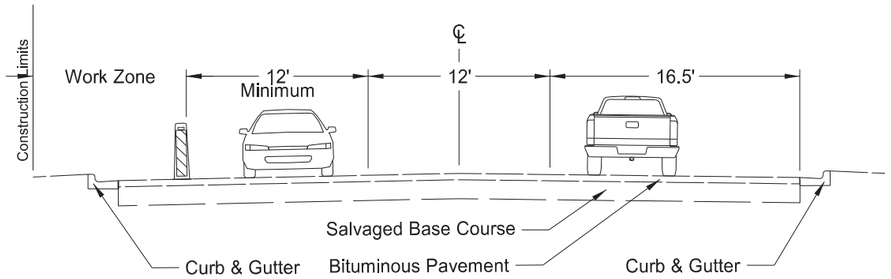

Existing Typical Section #1 - ND 22
SCL22
Sta 3674+50 to Sta 3675+53
Sta 3680+90 to Sta 3684+25

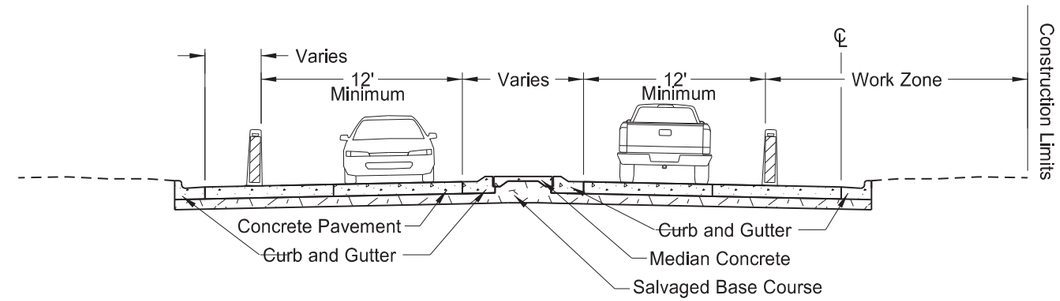

Proposed Typical Section
Roundabout Approaches / Splitter Island
SCL22
Sta 3679+50 to Sta 3680+90
SCL8
Sta 65+42 to Sta 68+00
Sta 69+00 to Sta 71+00

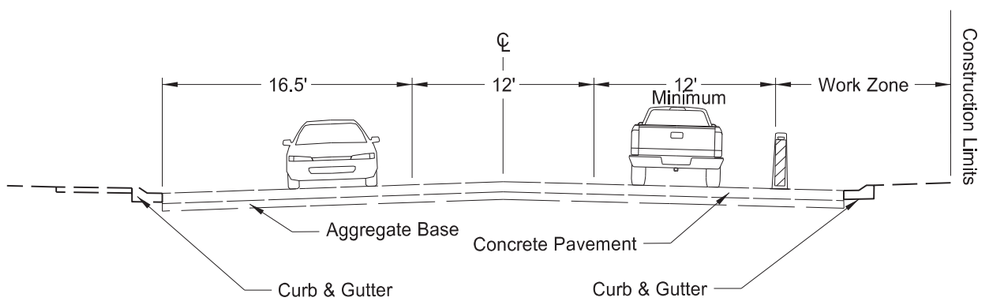

Existing Typical Section #4 - SW 8th St
SCL8
Sta 62+50 to Sta 65+42
Sta 71+00 to Sta 72+75

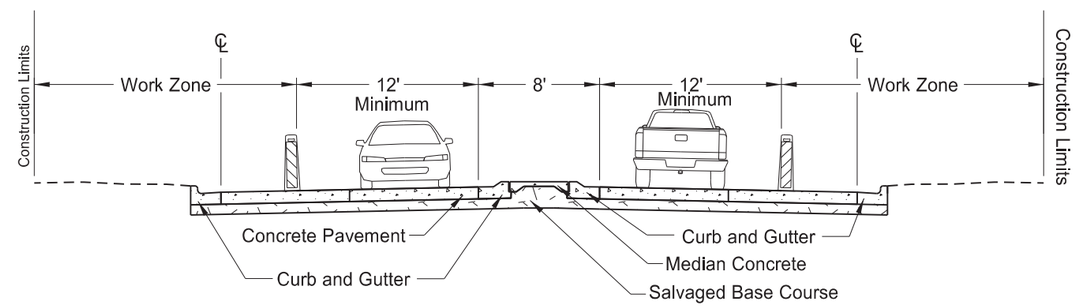

Proposed Typical Section
Roundabout Approaches / Splitter Island
SCL22
Sta 3675+53 to Sta 3678+00

Traffic Sequencing

ND 22 & 8th St S Intersection

Phase 5 Typical Sections

REGISTERED PROFESSIONAL ENGINEER
JASON P GULLICKS
PE-4792
DATE 2025.12.17
19:30:45 -06'00'
NORTH DAKOTA

STATE	PROJECT NO.	SECTION NO.	SHEET NO.
ND	HEN-5-022(144)069	100	38

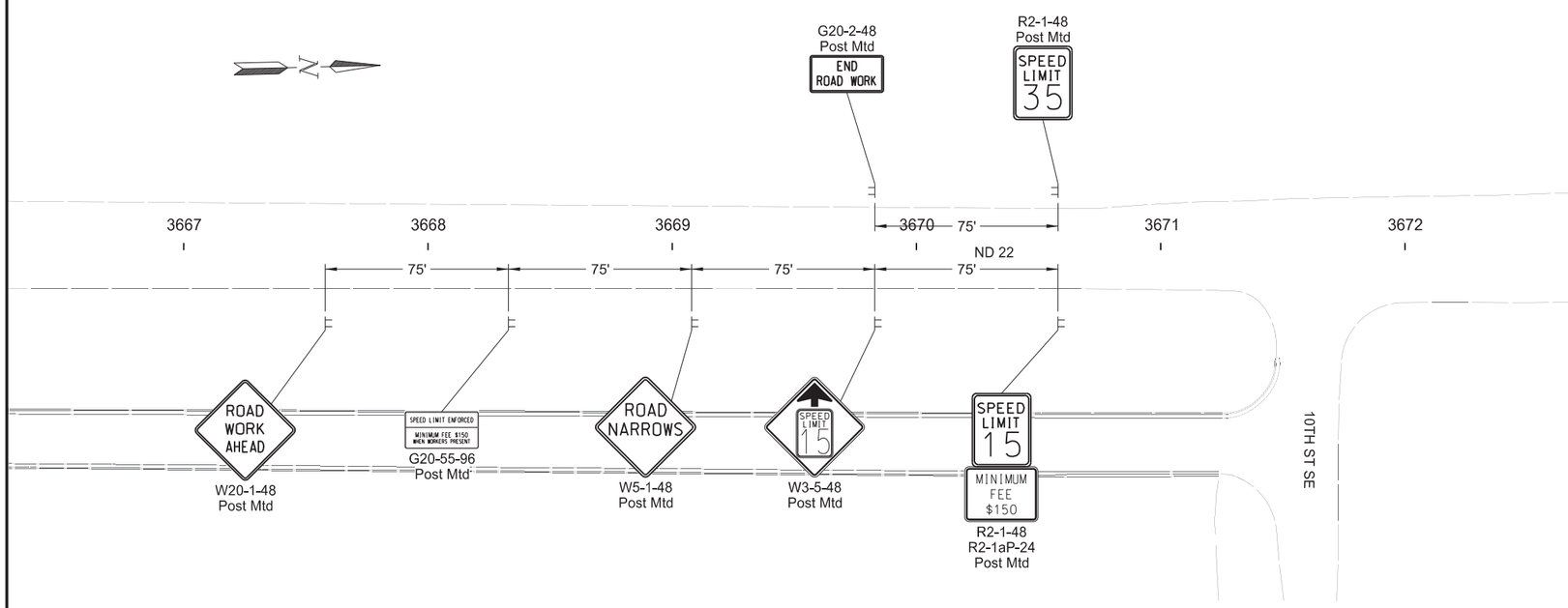

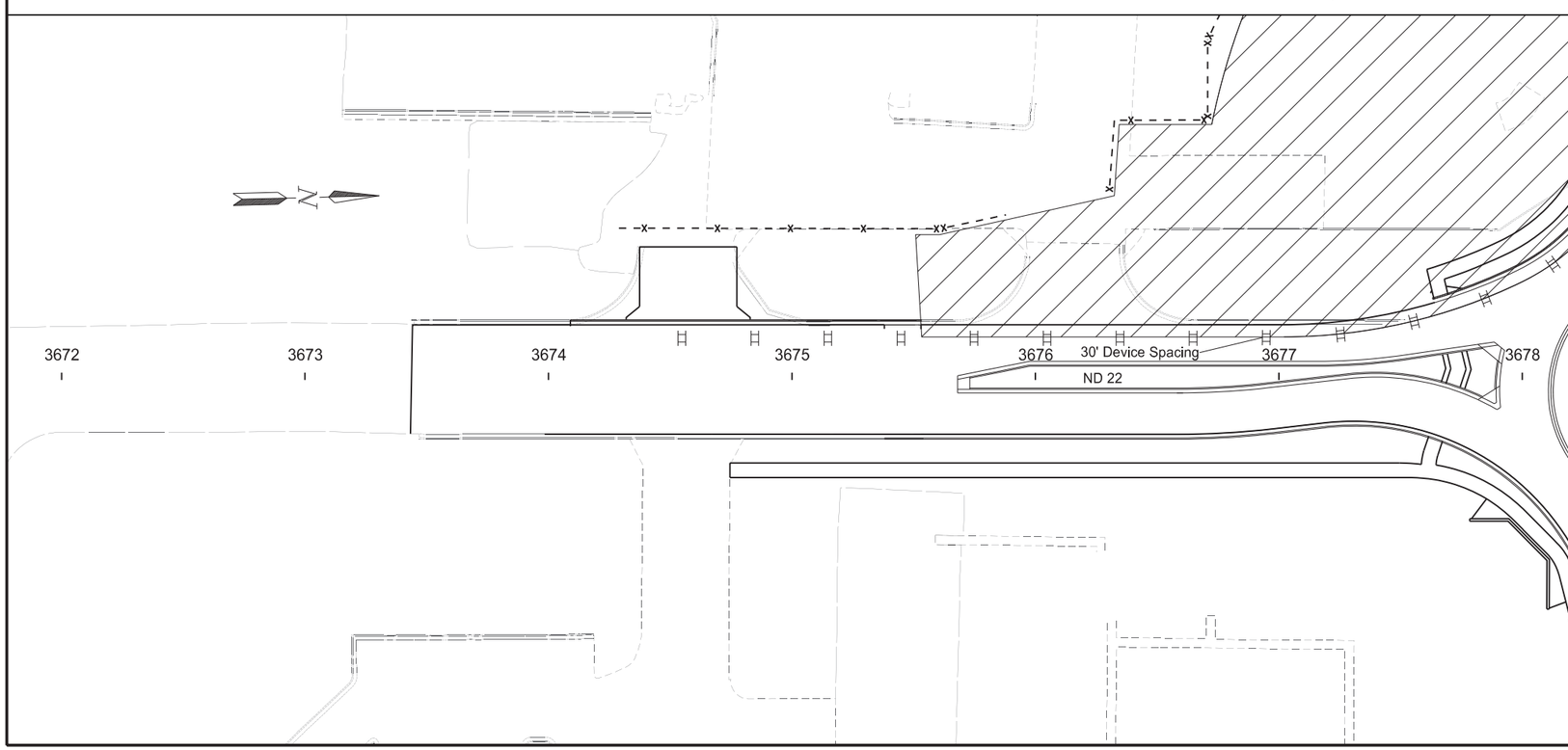

LEGEND

- Stackable Vertical Panel
- Delineator Drum
- Tubular Marker
- Safety Fence
- Barrier
- Work Zone
- Temporary Pedestrian Walkway

Work Zone Traffic Control

Phase 5

ND 22 & 8th St S Intersection
ND 22 - 11th St SE to 8th St SE

Sta 3666+75 to Sta 3677+75
(SCL22)

REGISTERED PROFESSIONAL ENGINEER
JASON P GULLICKS
PE-4792
DATE 2025.12.17
19:31:11 -06'00'
NORTH DAKOTA

STATE	PROJECT NO.	SECTION NO.	SHEET NO.
ND	HEN-5-022(144)069	100	39

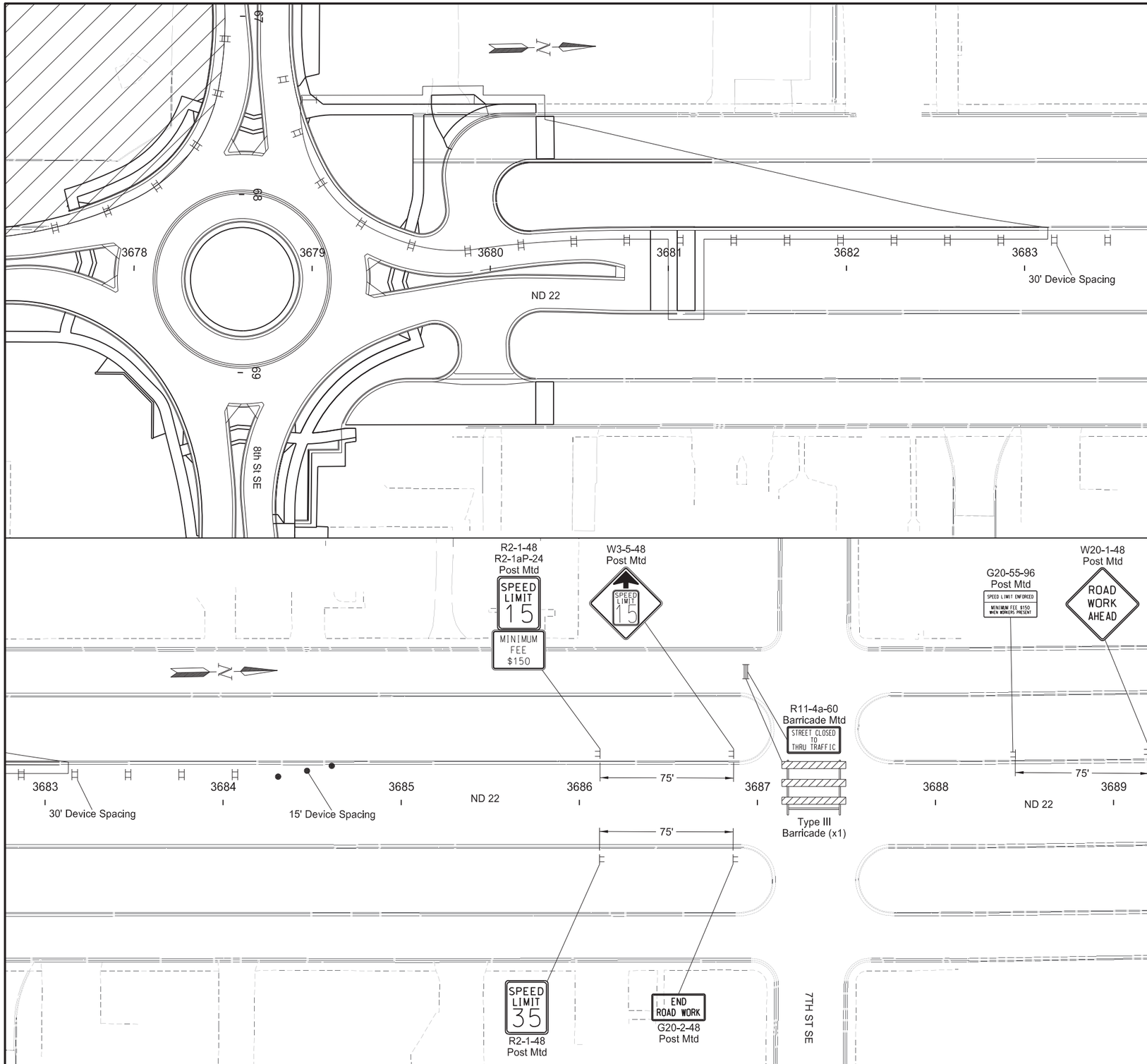

LEGEND

- Stackable Vertical Panel
- Delineator Drum
- Tubular Marker
- Safety Fence
- Barrier
- Work Zone
- Temporary Pedestrian Walkway

Work Zone Traffic Control

Phase 5

ND 22 & 8th St S Intersection
ND 22 - 8th St SE to 7th St SE

Sta 3677+75 to Sta 3688+75
(SCL22)

REGISTERED PROFESSIONAL ENGINEER
JASON P GULLICKS
PE-4792
DATE 2025.12.17
19:31:38 -06'00'
NORTH DAKOTA

STATE	PROJECT NO.	SECTION NO.	SHEET NO.
ND	HEN-5-022(144)069	100	40

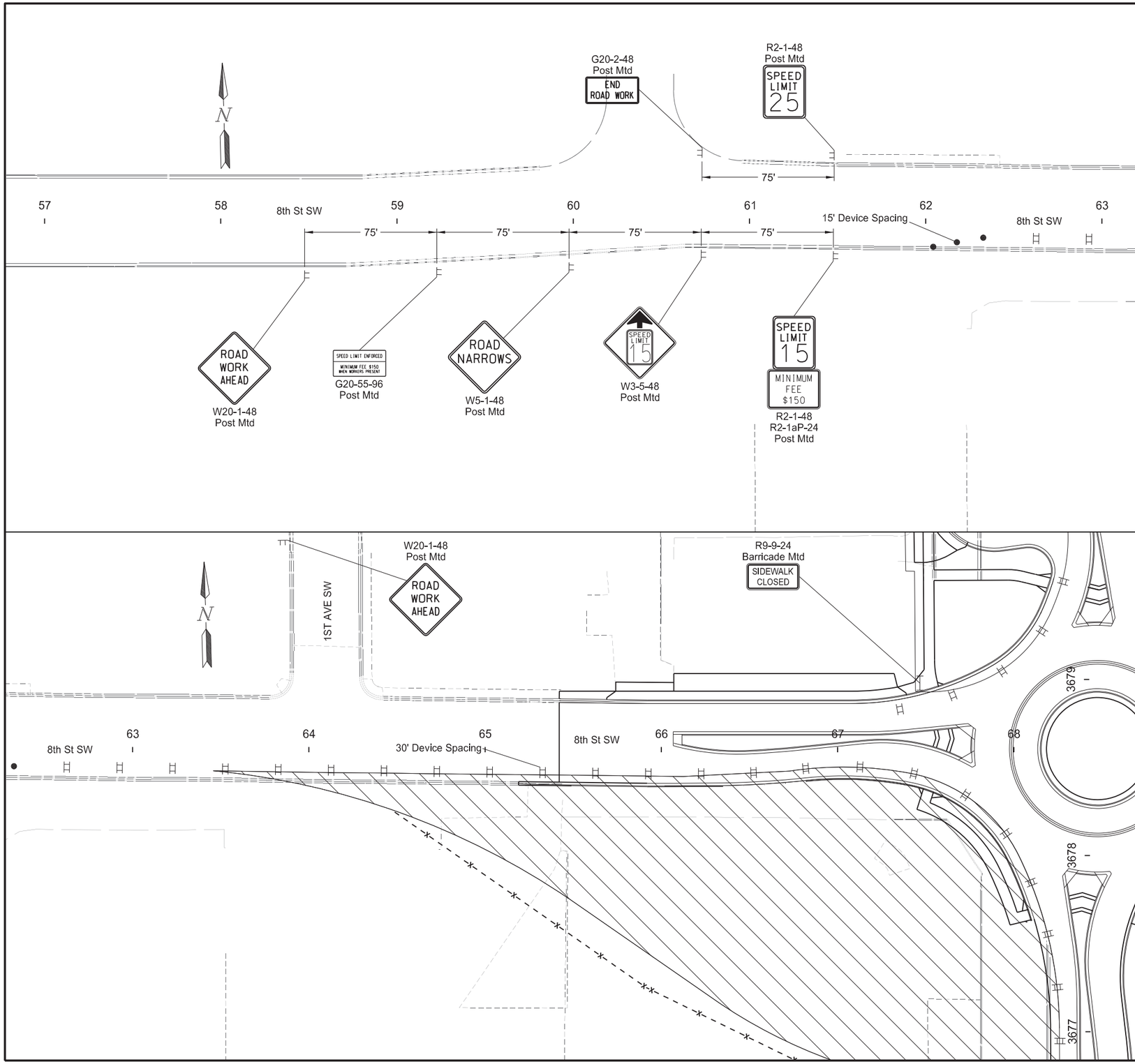

LEGEND

- Stackable Vertical Panel
- Delineator Drum
- Tubular Marker
- Safety Fence
- Barrier
- Work Zone
- Temporary Pedestrian Walkway

Work Zone Traffic Control

Phase 5

ND 22 & 8th St S Intersection
8th St SW - 2nd Ave SW to ND 22

Sta 57+25 to Sta 68+25
(SL8)

REGISTERED PROFESSIONAL ENGINEER
JASON P GULLICKS
PE-4792
DATE 2025.12.17
19:32:08 -06'00'
NORTH DAKOTA

STATE	PROJECT NO.	SECTION NO.	SHEET NO.
ND	HEN-5-022(144)069	100	41

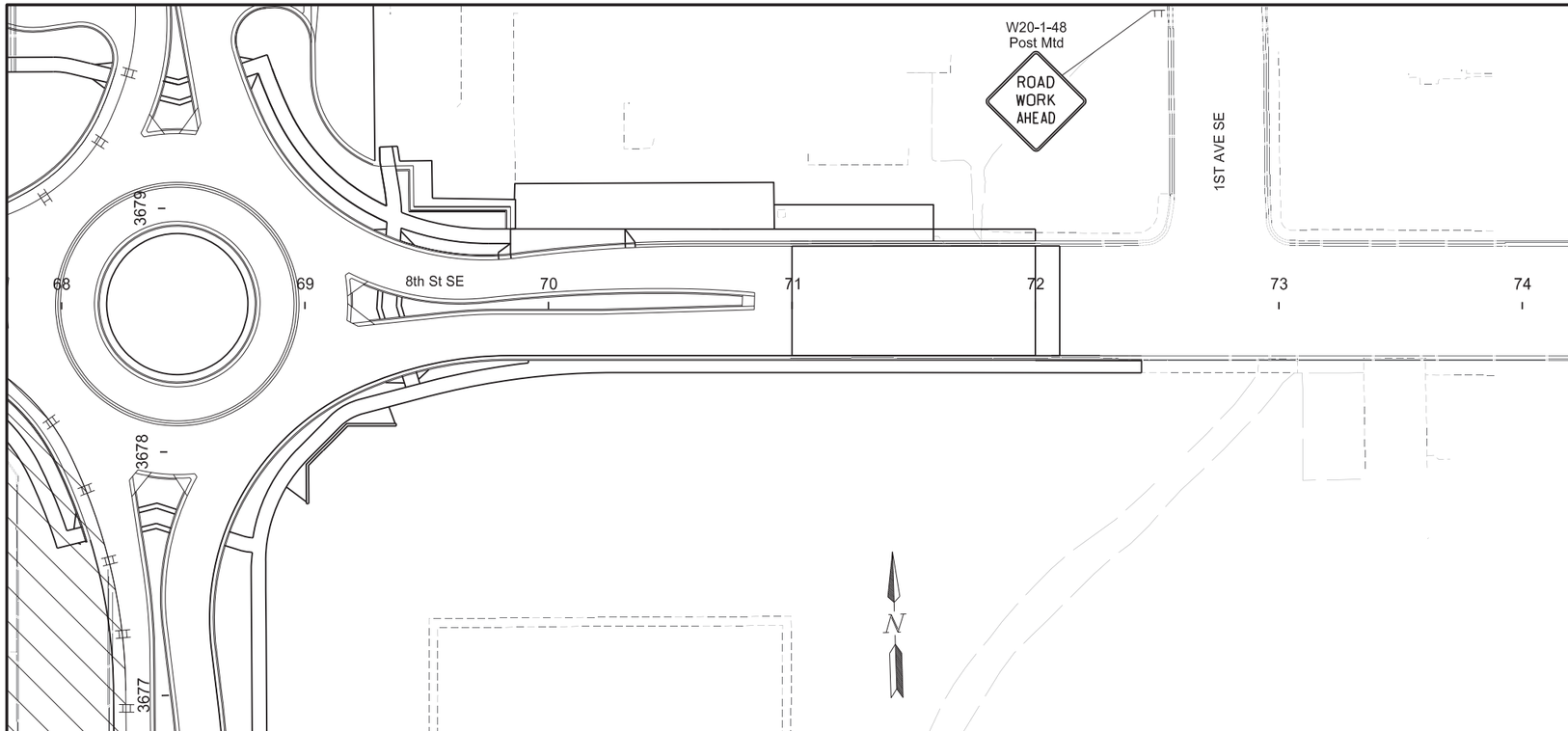

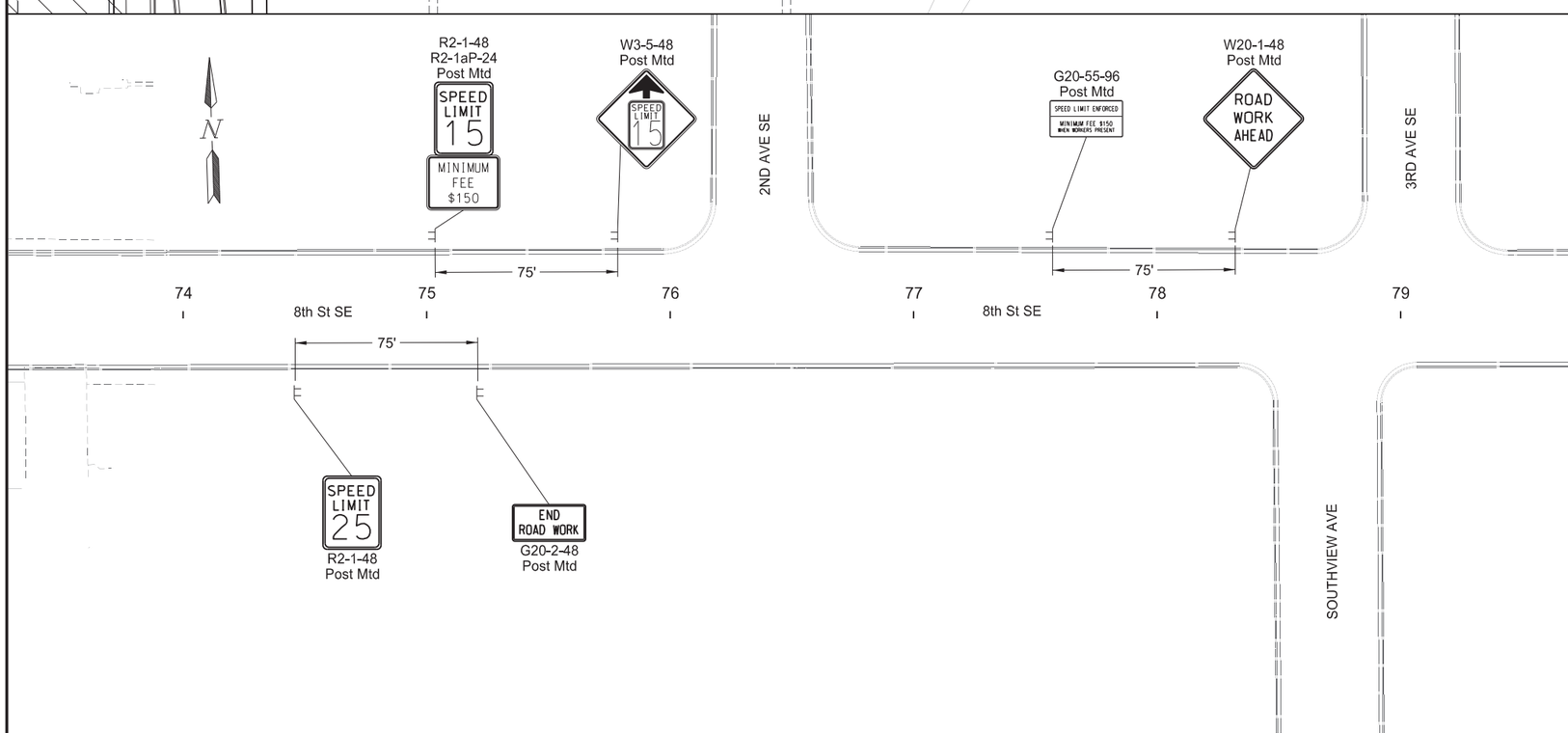

LEGEND

- Stackable Vertical Panel
- Delineator Drum
- Tubular Marker
- Safety Fence
- Barrier
- Work Zone
- Temporary Pedestrian Walkway

Work Zone Traffic Control

Phase 5

ND 22 & 8th St S Intersection
8th St SE - ND 22 to 2nd St SE

Sta 68+25 to Sta 79+25
(SL8)

REGISTERED PROFESSIONAL ENGINEER
JASON P GULLICKS
PE-4792
DATE 2025.12.17 19:32:32 -06'00'
NORTH DAKOTA

STATE	PROJECT NO.	SECTION NO.	SHEET NO.
N.D.	HEN-5-022(144)069	110	1

Station / RP	Sign No.	Assembly No.	Flat Sheet For Signs IV SF	Flat Sheet For Signs XI SF	Sign Support Length 1st LF	Sign Support Length 2nd LF	Sign Support Length 3rd LF	Sign Support Length 4th LF	Vert Clear-ance FT	Support Size	Max Post Len LF	Sleeve Length 1st LF	Sleeve Length 2nd LF	Sleeve Length 3rd LF	Sleeve Length 4th LF	Sleeve Size	Anchor EA	Anchor LF	Anchor Size	Reset Sign Panel EA	Reset Sign Support EA	Break-Away EA	Comments
SCL 22																							
3672+00 Rt	Dickinson				9.7				7.0	2.5 x 2.5 10 ga	11.8						1	4	3 x 3 7 ga	1		1	Mount with ND Cares
3674+00 Rt	W2-6	53		8.5	11.8				7.0	2.5 x 2.5 12 ga	12.4						1	4	3 x 3 7 ga				Mount with W13-1P
3674+79 Rt	R1-1	1		5.2	9.7				7.0	2 x 2 12 ga	10.5						1	4	2.25 x 2.25 12 ga				
3675+00 Rt	SS1		13.5		9.2				7.0	2.25 x 2.25 12 ga	11.9	2.0				2.5 x 2.5 12 ga	1	4	3 x 3 7 ga			1	D-754-47
3675+82 Rt mdn	R4-7	9		5.0	9.7				7.0	2 x 2 12 ga	11.5						1	4	2.25 x 2.25 12 ga				
3675+91 Lt	R1-1	1		5.2	9.7				7.0	2 x 2 12 ga	10.5						1	4	2.25 x 2.25 12 ga				
3676+00 Rt	D9-2	399	6.2		10.5				7.0	2.25 x 2.25 12 ga	12.7						1	4	2.5 x 2.5 12 ga				Mount with M5-3P
3676+08 Lt mdn	R6-1R	27		3.0	8.2				7.0	2 x 2 12 ga	13.2						1	4	2.25 x 2.25 12 ga				
3677+00 Lt	I3-5	399	6.2		10.5				7.0	2.25 x 2.25 12 ga	12.7						1	4	2.5 x 2.5 12 ga				Mount with M6-3P
3677+02 Rt	SA C		14.4		10.4				7.0	2.25 x 2.25 12 ga	12.1	2.8				2.5 x 2.5 12 ga	1	4	3 x 3 7 ga			1	Mount with M3-4P, M3-2P, R14-1(2), M5-3P, and M6-1P
3677+59 Lt	SA A			8.4	12.0				7.0	2.5 x 2.5 12 ga	12.9						1	4	3 x 3 7 ga				Mount with W11-2 and W16-7P
3677+67 Rt	SA A			8.4	12.0				7.0	2.5 x 2.5 12 ga	12.9						1	4	3 x 3 7 ga				Mount with W11-2 and W16-7P
3677+76 Lt	SS2		26.3		9.7	9.7			7.0	2.25 x 2.25 12 ga	12.4	2.1	2.1			2.5 x 2.5 12 ga	2	4	3 x 3 7 ga			2	D-754-48
3677+77 Rt	R1-2	4		3.9	9.8				7.0	2 x 2 12 ga	13.6						1	4	2.25 x 2.25 12 ga				
3678+38 Rt mdn	SA B			5.3	10.3				7.0	2 x 2 12 ga	11.2						1	4	2.25 x 2.25 12 ga				Mount with R6-1R and OM1-3
3678+82 Lt mdn	SA B			5.3	10.3				7.0	2 x 2 12 ga	11.2						1	4	2.25 x 2.25 12 ga				Mount with R6-1R and OM1-3
3679+40 Lt	R1-2	4		3.9	9.8				7.0	2 x 2 12 ga	13.6						1	4	2.25 x 2.25 12 ga				
3679+49 Lt	SA A			8.4	12.0				7.0	2.5 x 2.5 12 ga	12.9						1	4	3 x 3 7 ga				Mount with W11-2 and W16-7P
3679+54 Rt	SS3		26.3		9.7	9.7			7.0	2.25 x 2.25 12 ga	12.4	2.1	2.1			2.5 x 2.5 12 ga	2	4	3 x 3 7 ga			2	D-754-48
3679+64 Rt	SA A			8.4	12.0				7.0	2.5 x 2.5 12 ga	12.9						1	4	3 x 3 7 ga				Mount with W11-2 and W16-7P
3680+27 Rt	R1-1	1		5.2	9.7				7.0	2 x 2 12 ga	10.5						1	4	2.25 x 2.25 12 ga				
3680+65 Rt mdn	R4-7	9		5.0	9.7				7.0	2 x 2 12 ga	11.5						1	4	2.25 x 2.25 12 ga				
3681+00 Lt	SS4		13.5		9.2				7.0	2.25 x 2.25 12 ga	11.9	2.0				2.5 x 2.5 12 ga	1	4	3 x 3 7 ga			1	D-754-47
3682+00 Lt	W2-6	53		8.5	11.8				7.0	2.5 x 2.5 12 ga	12.4						1	4	3 x 3 7 ga				Mount with W13-1P
3682+00 Rt	R2-1	9		5.0	9.7				7.0	2 x 2 12 ga	11.5						1	4	2.25 x 2.25 12 ga				
3779+94 Rt mdn	SA D			6.0	8.2				7.0	2 x 2 12 ga	13.2						1	4	2.25 x 2.25 12 ga				Mount with R6-1R(2)
Sub Total			106.4	108.6		**Total**	284.7										**Total**	112.0		1	0	8	

REGISTERED PROFESSIONAL ENGINEER
AMANDA N. VETTER
PE-28802
DATE 2025.12.17 10:09:56-07'00'
NORTH DAKOTA

Sign Summary
Perforated Tube

ND 22 & 8th St S Intersection

STATE	PROJECT NO.	SECTION NO.	SHEET NO.
N.D.	HEN-5-022(144)069	110	2

Station / RP	Sign No.	Assembly No.	Flat Sheet For Signs IV SF	Flat Sheet For Signs XI SF	Sign Support Length 1st LF	Sign Support Length 2nd LF	Sign Support Length 3rd LF	Sign Support Length 4th LF	Vert Clear-ance FT	Support Size	Max Post Len LF	Sleeve Length 1st LF	Sleeve Length 2nd LF	Sleeve Length 3rd LF	Sleeve Length 4th LF	Sleeve Size	Anchor EA	Anchor LF	Anchor Size	Reset Sign Panel EA	Reset Sign Support EA	Break-Away EA	Comments
SCL 8																							
64+50 Rt	W2-6	53		8.5	11.8				7.0	2.5 x 2.5 12 ga	12.4						1	4	3 x 3 7 ga				Mount with W13-1P
65+71 Lt	R2-1	9		5.0	9.7				7.0	2 x 2 12 ga	11.5						1	4	2.25 x 2.25 12 ga				
65+75 Rt	M1-5	391	6.2		10.5				7.0	2.25 x 2.25 12 ga	12.7						1	4	2.5 x 2.5 12 ga				Mount with M2-1P
66+15 Lt mdn	R4-7	9		5.0	9.7				7.0	2 x 2 12 ga	11.5						1	4	2.25 x 2.25 12 ga				
67+56 Rt	SA A			8.4	11.0				7.0	2.5 x 2.5 10 ga	13.1	2.7				2.19 x 2.19 10 ga	1	4	3 x 3 7 ga			1	Mount with W11-2 and W16-7P
67+60 Lt	SA A			8.4	11.0				7.0	2.5 x 2.5 10 ga	13.1	2.7				2.19 x 2.19 10 ga	1	4	3 x 3 7 ga			1	Mount with W11-2 and W16-7P
67+67 Rt	R1-2	4		3.9	9.8				7.0	2 x 2 12 ga	13.6						1	4	2.25 x 2.25 12 ga				
67+69 Lt	SS5		9.0		8.2				7.0	2.5 x 2.5 12 ga	9.3						1	4	3 x 3 7 ga				D-754-47
68+15 Lt	R1-1	1		5.2	9.7				7.0	2 x 2 12 ga	10.5						1	4	2.25 x 2.25 12 ga				
68+24 Rt mdn	SA B			5.3	10.3				7.0	2 x 2 12 ga	11.2						1	4	2.25 x 2.25 12 ga				Mount with R6-1 and OM1-3
68+71 Rt mdn	SA B			5.3	10.3				7.0	2 x 2 12 ga	11.2						1	4	2.25 x 2.25 12 ga				Mount with R6-1 and OM1-3
69+25 Lt	R1-2	4		3.9	9.8				7.0	2 x 2 12 ga	13.6						1	4	2.25 x 2.25 12 ga				
69+38 Rt	SS6		9.0		8.2				7.0	2.5 x 2.5 12 ga	9.3						1	4	3 x 3 7 ga				D-754-47
69+47 Lt	SA A			8.4	11.0				7.0	2.5 x 2.5 10 ga	13.1	2.7				2.19 x 2.19 10 ga	1	4	3 x 3 7 ga			1	Mount with W11-2 and W16-7P
69+53 Rt	SA A			8.4	11.0				7.0	2.5 x 2.5 10 ga	13.1	2.7				2.19 x 2.19 10 ga	1	4	3 x 3 7 ga			1	Mount with W11-2 and W16-7P
70+00 Lt	R6-1R	27		3.0	8.2				7.0	2 x 2 12 ga	13.2						1	4	2.25 x 2.25 12 ga				
70+70 Rt mdn	R4-7	9		5.0	9.7				7.0	2 x 2 12 ga	11.5						1	4	2.25 x 2.25 12 ga				
72+00 Lt	W2-6	53		8.5	11.8				7.0	2.5 x 2.5 12 ga	12.4						1	4	3 x 3 7 ga				Mount with W13-1P
Sub Total			24.2	92.2		**Total**	181.7										**Total**	72.0		0	0	4	
Grand Total			**130.6**	**200.8**		**Total**	**466.4**										**Total**	**184**	**0**	**1**	**0**	**12**	

REGISTERED PROFESSIONAL ENGINEER
AMANDA N. VETTER
PE-28802
DATE 2025.12.17 10:10:19-07'00'
NORTH DAKOTA

Sign Summary
Perforated Tube

ND 22 & 8th St S Intersection

STATE	PROJECT NO.	SECTION NO.	SHEET NO.
ND	HEN-5-022(144)069	110	3

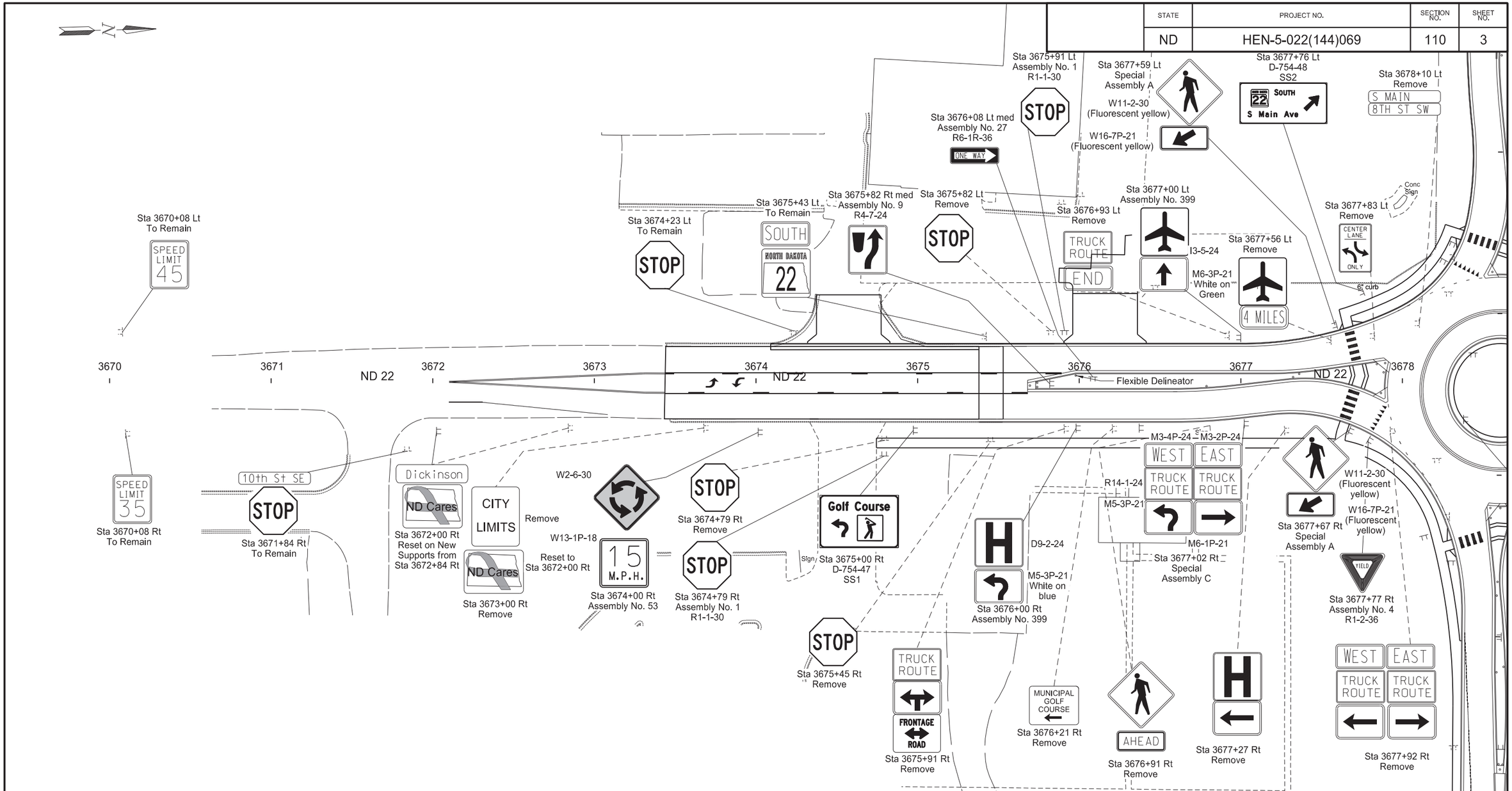

SPEC	CODE	BID ITEM	QTY	UNIT
HEN-5-022(144)069				
754	0170	FLEXIBLE DELINEATORS South Leg of Roundabout	11	EA

Permanent Signing

ND 22 & 8th St S Intersection

Sta 3670+00 to Sta 3678+00
(SCL 22)

REGISTERED PROFESSIONAL ENGINEER
AMANDA N. VETTER
PE-28802
DATE 2025.12.17 10:10:36-07'00'
NORTH DAKOTA

STATE	PROJECT NO.	SECTION NO.	SHEET NO.
ND	HEN-5-022(144)069	110	4

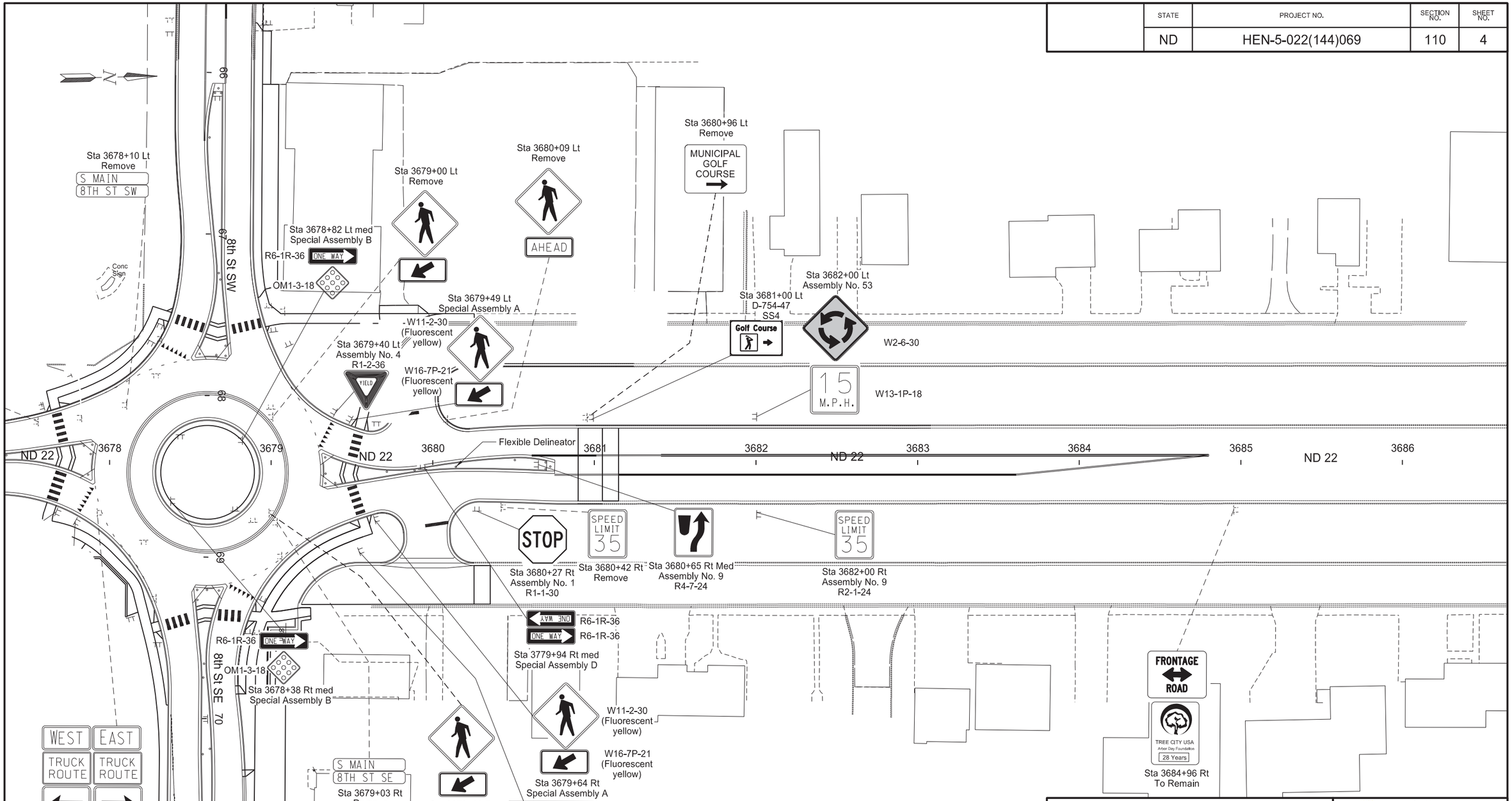

SPEC	CODE	BID ITEM	QTY	UNIT
HEN-5-022(144)069				
754	0170	FLEXIBLE DELINEATORS North Leg of Roundabout	11	EA

Permanent Signing

ND 22 & 8th St S Intersection

Sta 3678+00 to Sta 3686+00
(SCL 22)

REGISTERED PROFESSIONAL ENGINEER
AMANDA N. VETTER
PE-28802
DATE 2025.12.17 10:10:56-07'00'
NORTH DAKOTA

STATE	PROJECT NO.	SECTION NO.	SHEET NO.
ND	HEN-5-022(144)069	110	5

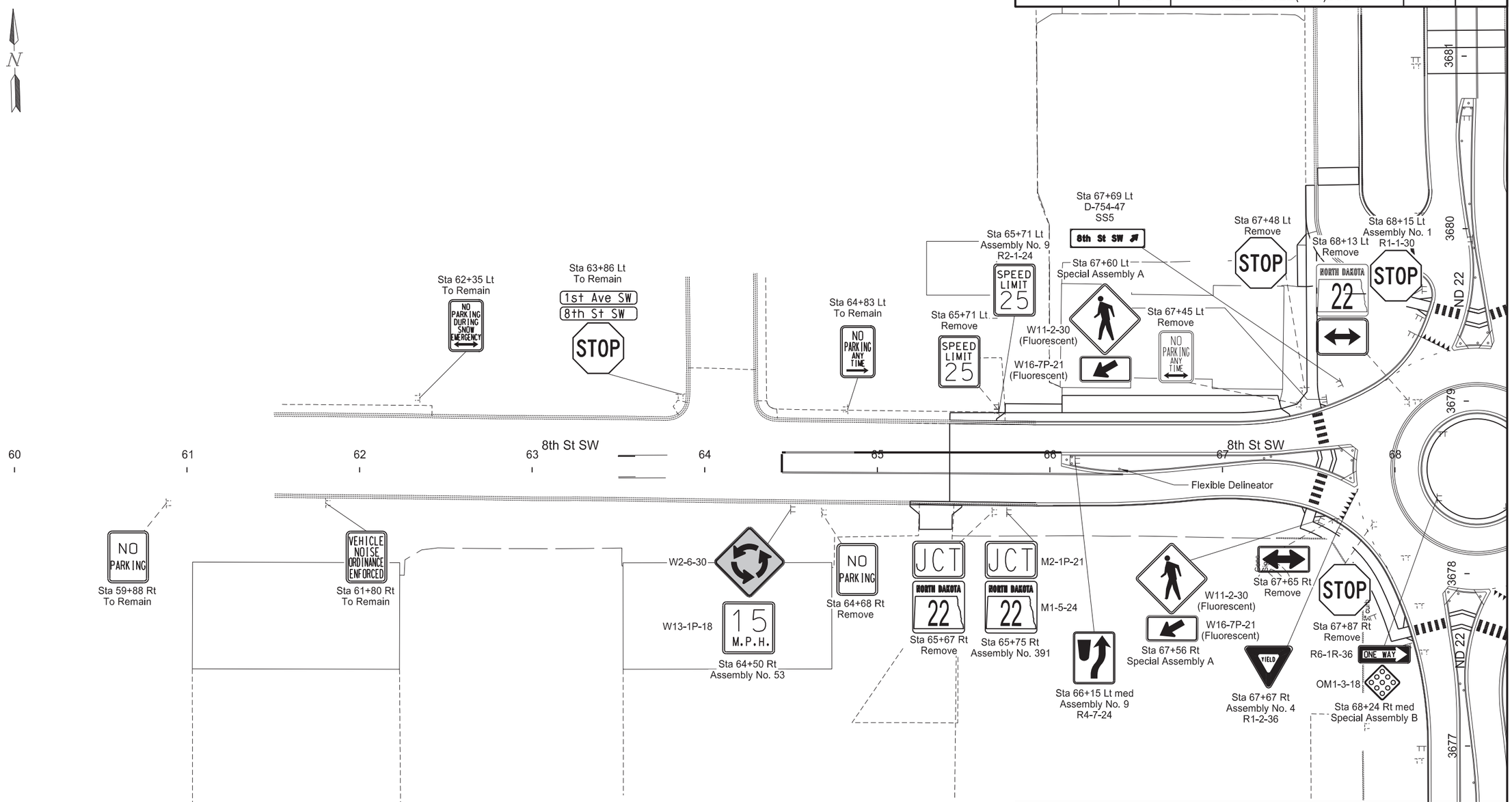

SPEC	CODE	BID ITEM	QTY	UNIT
HEN-5-022(144)069				
754	0170	FLEXIBLE DELINEATORS West Leg of Roundabout	10	EA

Permanent Signing

ND 22 & 8th St S Intersection

Sta 60+00 to Sta 68+00
(SCL 8)

REGISTERED PROFESSIONAL ENGINEER
AMANDA N. VETTER
PE-28802
DATE 2025.12.17 10:11:12-07'00
NORTH DAKOTA

STATE	PROJECT NO.	SECTION NO.	SHEET NO.
ND	HEN-5-022(144)069	110	6

SPEC	CODE	BID ITEM	QTY	UNIT
HEN-5-022(144)069				
754	0170	FLEXIBLE DELINEATORS		
		East Leg of Roundabout	11	EA

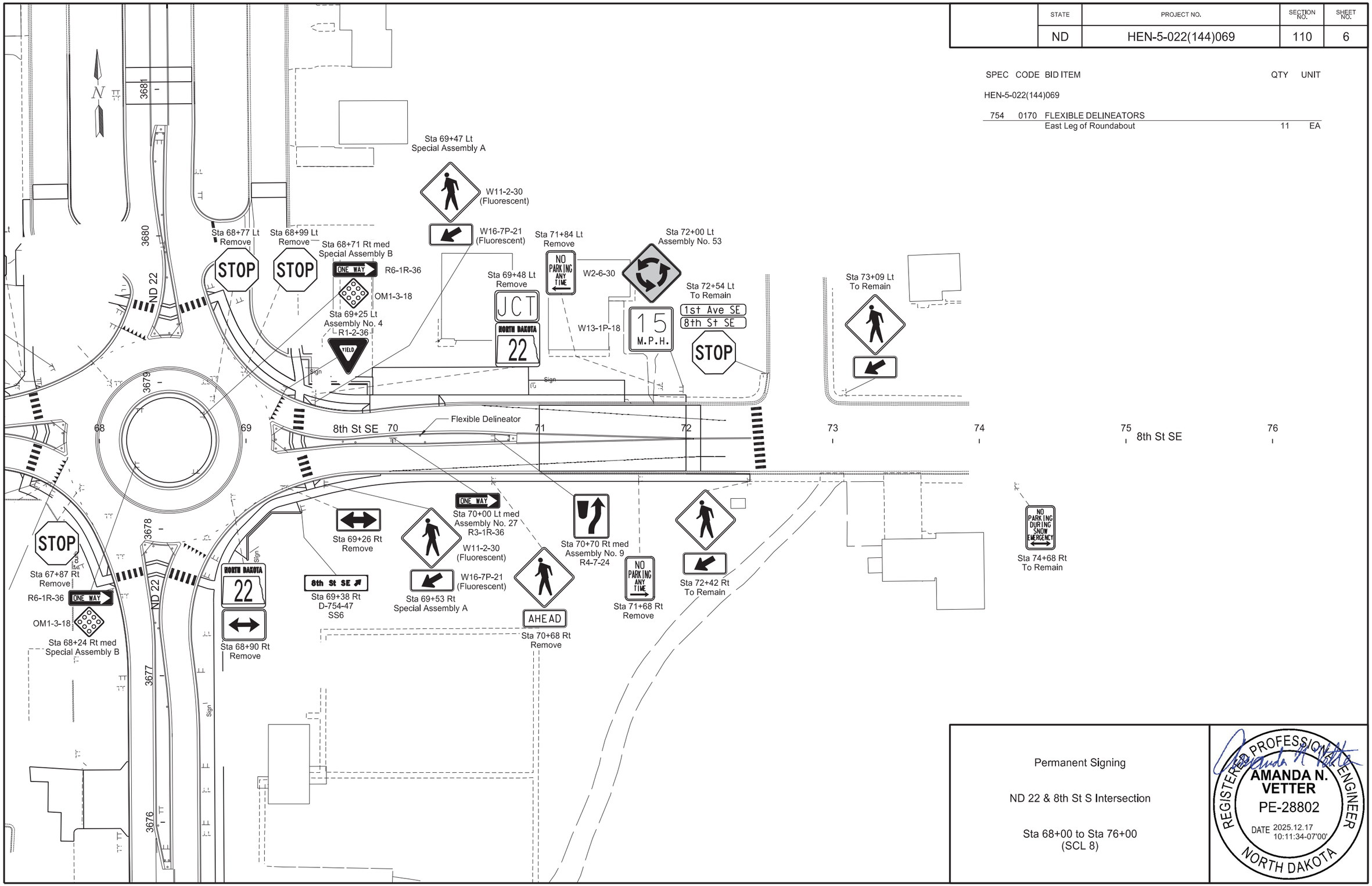

Permanent Signing

ND 22 & 8th St S Intersection

Sta 68+00 to Sta 76+00
(SCL 8)

REGISTERED PROFESSIONAL ENGINEER
AMANDA N. VETTER
PE-28802
DATE 2025.12.17 10:11:34-07'00'
NORTH DAKOTA

8/6/2025 11:20:11 AM trayton.hinderer K:\Projects\2022\22.101.0238 NDDOT - ND 22 & 8th St\50022069.144\Traffic\110SN\110SN_8th.dgn

STATE	PROJECT NO.	SECTION NO.	SHEET NO.
ND	HEN-5-022(144)069	110	7

SIGN NUMBER	SS1
WIDTH X HEIGHT	4'-6" x 3'-0"
BORDER WIDTH	0.75" (inset 0")
CORNER RADIUS	3"
MOUNTING	Ground
BACKGROUND	TYPE: IV Reflective
	COLOR: Brown
LEGEND/BORDER	TYPE: IV Reflective
	COLOR: White

SYMBOL	X	Y	WID	HT	ANGLE
ND_6IN_RNDABOUT	9.23	7.37	11.55	12.26	0
RS-128	26.77	4.5	18	18	0

STATION(S):
Sta 3675+00 Rt

AREA: 13.5 Sq.Ft.

Dimensions are in inches.tenths

Letter locations are panel edge to lower left corner

PANEL STYLE: ND_Conv_Recreation_Cultural.ssl

LETTER POSITION (X)										LENGTH	SIZE	SERIES
G	o	l	f	C	o	u	r	s	e			
6	11.04	15.66	17.46	24.12	29.16	33.72	38.46	41.1	44.46	42	6/4.5	D 2000

SIGN NUMBER	SS2
WIDTH X HEIGHT	7'-6" x 3'-6"
BORDER WIDTH	0.75" (inset 0")
CORNER RADIUS	3"
MOUNTING	Ground
BACKGROUND	TYPE: IV Reflective
	COLOR: Green
LEGEND/BORDER	TYPE: IV Reflective
	COLOR: White

SYMBOL	X	Y	WID	HT	ANGLE
ND_M1-5_2	10.91	17.25	18.01	18	0
ND_6IN_TYPE A	65.31	13.14	11.99	19.99	315

STATION(S):
Sta 3677+76 Lt

AREA: 26.25 Sq.Ft.

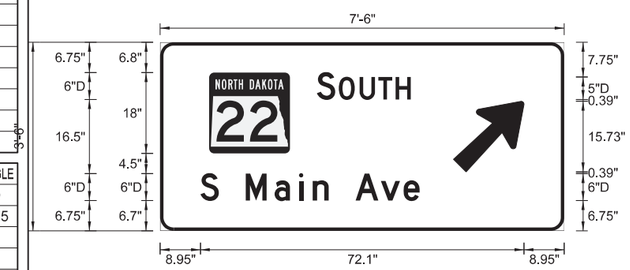

Dimensions are in inches.tenths

Letter locations are panel edge to lower left corner

PANEL STYLE: ND_Conv_Destination.ssl

LETTER POSITION (X)									LENGTH	SIZE	SERIES
S	O	U	T	H							
34.91	39.79	44.44	48.59	52.44					20.93	6,5	D 2000
S	M	a	i	n	A	v	e				
8.96	19.04	25.51	30.92	33.98	43.52	49.15	54.25		48.83	6,6/4.5	D 2000

SIGN NUMBER	SS3
WIDTH X HEIGHT	7'-6" x 3'-6"
BORDER WIDTH	0.75" (inset 0")
CORNER RADIUS	3"
MOUNTING	Ground
BACKGROUND	TYPE: IV Reflective
	COLOR: Green
LEGEND/BORDER	TYPE: IV Reflective
	COLOR: White

SYMBOL	X	Y	WID	HT	ANGLE
ND_M1-5_2	10.87	17.25	18	18	0
ND_6IN_TYPE A	65.31	13.14	11.99	19.99	315

STATION(S):
Sta 3679+54 Rt

AREA: 26.25 Sq.Ft.

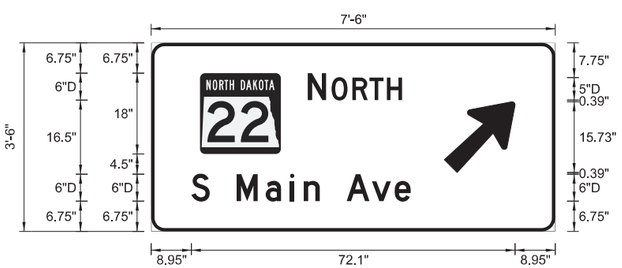

Dimensions are in inches.tenths

Letter locations are panel edge to lower left corner

PANEL STYLE: ND_Conv_Destination.ssl

LETTER POSITION (X)									LENGTH	SIZE	SERIES
N	O	R	T	H							
34.88	40.18	44.83	48.63	52.48					21	6,5	D 2000
S	M	a	i	n	A	v	e				
8.96	19.04	25.51	30.92	33.98	43.52	49.15	54.25		48.83	6,6/4.5	D 2000

SIGN NUMBER	SS4
WIDTH X HEIGHT	4'-6" x 3'-0"
BORDER WIDTH	0.75" (inset 0")
CORNER RADIUS	3"
MOUNTING	Ground
BACKGROUND	TYPE: IV Reflective
	COLOR: Brown
LEGEND/BORDER	TYPE: IV Reflective
	COLOR: White

SYMBOL	X	Y	WID	HT	ANGLE
ND_6IN_TYPE D	34.5	10.5	6	9	270
RS-128	10.5	4.5	18	18	0

STATION(S):
Sta 3681+00 Lt

AREA: 13.5 Sq.Ft.

Dimensions are in inches.tenths

Letter locations are panel edge to lower left corner

PANEL STYLE: ND_Conv_Recreation_Cultural.ssl

LETTER POSITION (X)										LENGTH	SIZE	SERIES
G	o	l	f	C	o	u	r	s	e			
6	11.04	15.66	17.46	24.12	29.16	33.72	38.46	41.1	44.46	42	6/4.5	D 2000

Permanent Signing

ND 22 & 8th St S Intersection

Special Sign Details

REGISTERED PROFESSIONAL ENGINEER
AMANDA N. VETTER
PE-28802
DATE 2025.12.17 10:12:10-07'00'
NORTH DAKOTA

STATE	PROJECT NO.	SECTION NO.	SHEET NO.
ND	HEN-5-022(144)069	110	8

SIGN NUMBER	SS5
WIDTH X HEIGHT	6'-0" x 1'-6"
BORDER WIDTH	0.75" (inset 0")
CORNER RADIUS	3"
MOUNTING	Ground
BACKGROUND	TYPE: IV Reflective
	COLOR: Green
LEGEND/BORDER	TYPE: IV Reflective
	COLOR: White

SYMBOL	X	Y	WID	HT	ANGLE
ND_6IN_TYPE D	57.99	5.43	6	9	315.05

STATION(S):
Sta 67+69 Lt

AREA: 9 Sq.Ft.

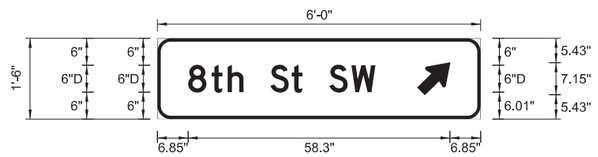

Dimensions are in inches.tenths

Letter locations are panel edge to lower left corner

PANEL STYLE: ND_Conv_Destination.ssl

LETTER POSITION (X)																			LENGTH	SIZE	SERIES
8	t	h	S	t	S	W													41.7	6/4.5	D 2000
6.85	12.09	15.64	25.18	29.89	38.29	43.21															

SIGN NUMBER	SS6
WIDTH X HEIGHT	6'-0" x 1'-6"
BORDER WIDTH	0.75" (inset 0")
CORNER RADIUS	3"
MOUNTING	Ground
BACKGROUND	TYPE: IV Reflective
	COLOR: Green
LEGEND/BORDER	TYPE: IV Reflective
	COLOR: White

SYMBOL	X	Y	WID	HT	ANGLE
ND_6IN_TYPE D	56.58	5.43	6	9	315.05

STATION(S):
Sta 69+38 Rt

AREA: 9 Sq.Ft.

Dimensions are in inches.tenths

Letter locations are panel edge to lower left corner

PANEL STYLE: ND_Conv_Destination.ssl

LETTER POSITION (X)																			LENGTH	SIZE	SERIES
8	t	h	S	t	S	E													41.03	6/4.5	D 2000
8.26	13.5	17.05	26.59	31.3	39.7	45.57															

Permanent Signing

ND 22 & 8th St S Intersection

Special Sign Details

REGISTERED PROFESSIONAL ENGINEER
AMANDA N. VETTER
PE-28802
DATE 2025.12.17 10:13:54-07'00'
NORTH DAKOTA

STATE	PROJECT NO.	SECTION NO.	SHEET NO.
ND	HEN-5-022(144)069	110	9

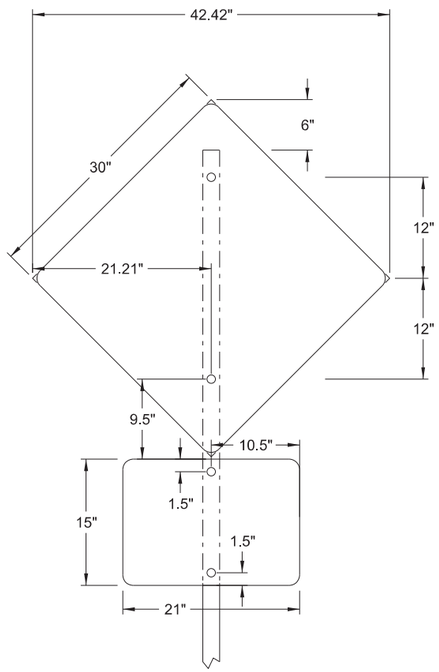

Special Assembly A
Area = 8.44 SF
(Perforated Square Tube)

Sta 3677+59 Lt
Sta 3677+67 Rt
Sta 3679+49 Lt
Sta 3679+64 Rt
Sta 67+56 Rt
Sta 67+60 Lt
Sta 69+47 Lt
Sta 69+53 Rt

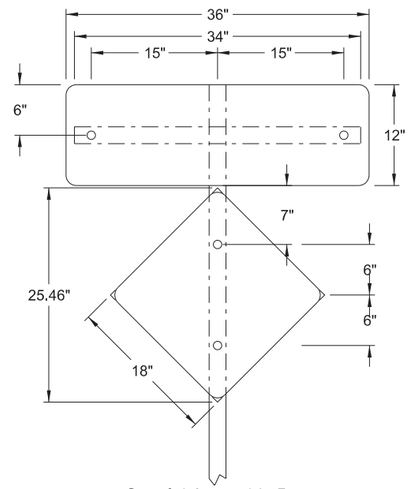

Special Assembly B
Area = 5.25 SF
(Perforated Square Tube)

Sta 3676+38 Rt med
Sta 3678+82 Lt med
Sta 68+24 Rt med
Sta 68+71 Rt med

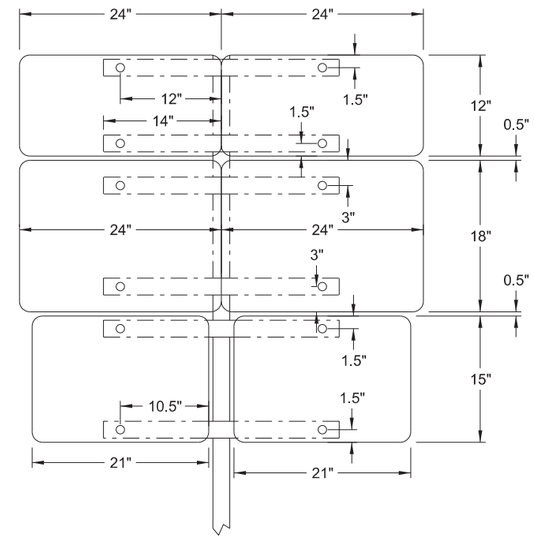

Special Assembly C
Area = 14.38 SF
(Perforated Square Tube)

Sta 3677+02 Rt

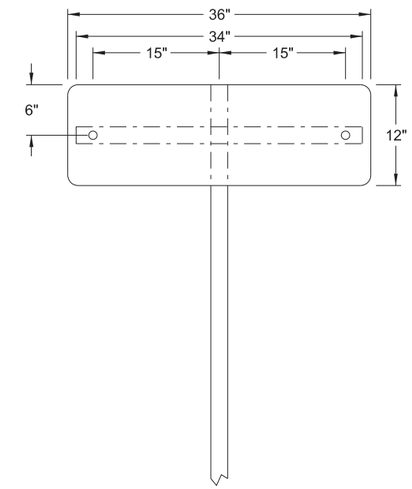

Special Assembly D
Area = 3.0 SF
(Perforated Square Tube)

Sta 3779+94 Rt med

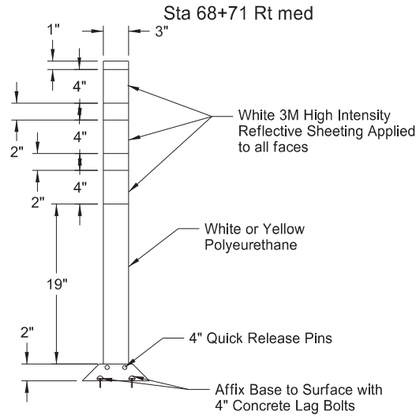

Flexible Delineator Detail
(Profile View)

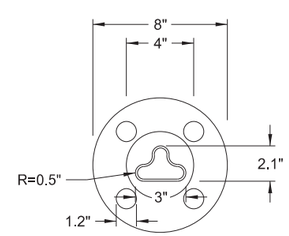

Flexible Delineator Detail
(Enlarged Top View)

Permanent Signing

ND 22 & 8th St S Intersection

Special Assembly Details

REGISTERED PROFESSIONAL ENGINEER
AMANDA N. VETTER
PE-28802
DATE 2025.12.17 10:14:12-07'00'
NORTH DAKOTA

STATE	PROJECT NO.	SECTION NO.	SHEET NO.
ND	HEN-5-022(144)069	120	1

PERMANENT PAVEMENT MARKING SUMMARY

Project	Reference Sheet Number	Chain	Begin Station	End Station	762 0110 EPOXY PVMT MK 4IN LINE-GROOVED				762 0122 PREFORMED PATTERNED PVMT MK-MESSAGE (GROOVED)	762 0135 EPOXY PVMT MK 24IN LINE-GROOVED	763 0136 EPOXY PVMT MK MESSAGE-GROOVED	762 1305 PREFORMED PATTERNED PVMT MK 4IN LINE-GROOVED				762 1309 PREFORMED PATTERNED PVMT MK 8IN LINE-GROOVED	762 1325 PREFORMED PATTERNED PVMT MK 24IN LINE-GROOVED	
					4IN White		4IN Yellow			24IN White		4IN White		4IN Yellow		8IN White	24IN White	
					Lt Edge Line	Rt Edge Line	Barrier Line	Center Line Skips (10' Line, 30' Skip)	Yield Line	Crosswalk	Turn Arrow	Lt Edge Line	Rt Edge Line	Center Line Skips (10' Line, 30' Skip)	Barrier Line	Dotted Line (2' Line, 6' Skip)	Crosswalk	Stop Bar
					(LF)	(LF)	(LF)	(LF)	(SF)	(LF)	(SF)	(LF)	(LF)	(LF)	(LF)	(LF)	(LF)	(LF)
HEN-5-022(144) 069	2	SCL22	3670+00	3682+00	-	98	1,886	120	36	-	32	-	-	20	141	36	114	28
	3	SCL22	3682+00	3688+00	-	-	1,044	-	-	-	-	-	-	-	-	-	-	-
	4	SCL8	60+00	72+00	-	-	-	-	36	-	-	-	-	-	-	32	108	-
	Subtotal				-	98	2,930	120	72	-	32	-	-	20	141	68	222	28
	HEN Total				3,148				72	-		161				68	250	
HEN-5-022(144)069 - Local	4	SCL8	60+00	72+00	152	127	910	30	-	66		40	78	-	390	-	-	-
	Subtotal				152	127	910	30	-	66		40	78	-	390	-	-	-
	HEN Local Total				1,219				-	66		508				-	-	
Grand Total					4,367				72	66	32	669				68	250	

*Pavement Markings on Conrete Pavement are Preformed Patterned Pvmt MK-Grooved.

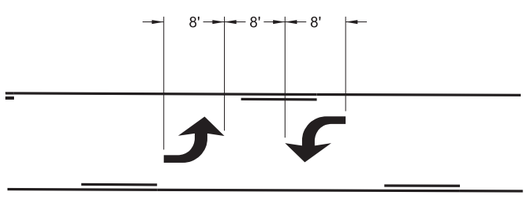

Two Way Left Turn Arrows Detail

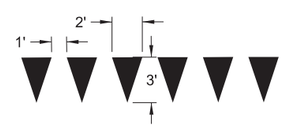

Yield Line Detail

Pavement Marking

ND 22 & 8th St S Intersection

Pavement Marking Details and Summary Tables

REGISTERED PROFESSIONAL ENGINEER
AMANDA N. VETTER
PE-28802
DATE 2025.12.17 10:07:30-07'00'
NORTH DAKOTA

STATE	PROJECT NO.	SECTION NO.	SHEET NO.
ND	HEN-5-022(144)069	120	2

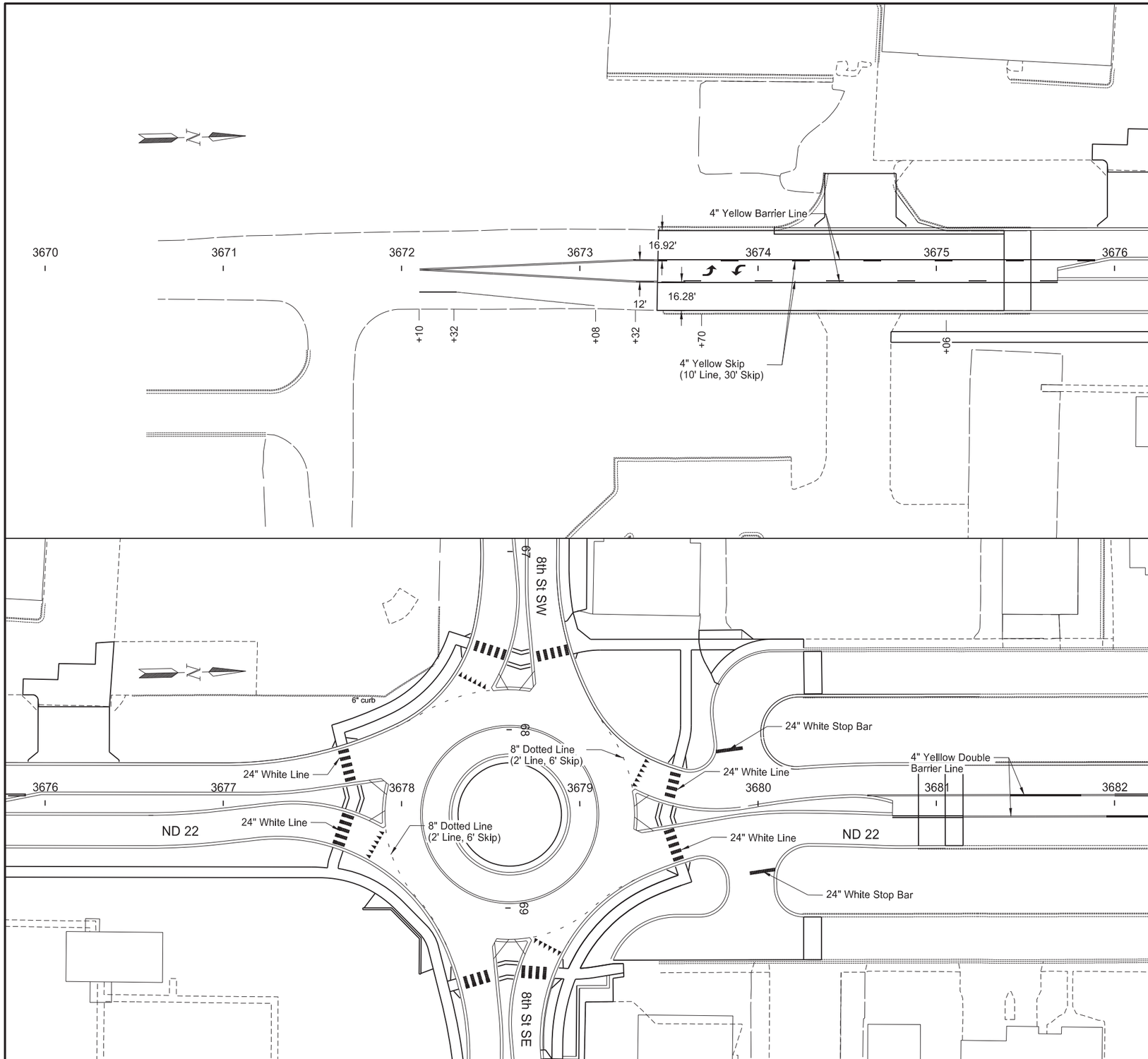

Pavement Marking

ND 22 & 8th St S Intersection

Sta 3670+00 to Sta 3682+00
(SCL 22)

REGISTERED PROFESSIONAL ENGINEER
AMANDA N. VETTER
PE-28802
DATE 2025.12.17 10:07:56-07'00
NORTH DAKOTA

STATE	PROJECT NO.	SECTION NO.	SHEET NO.
ND	HEN-5-022(144)069	120	3

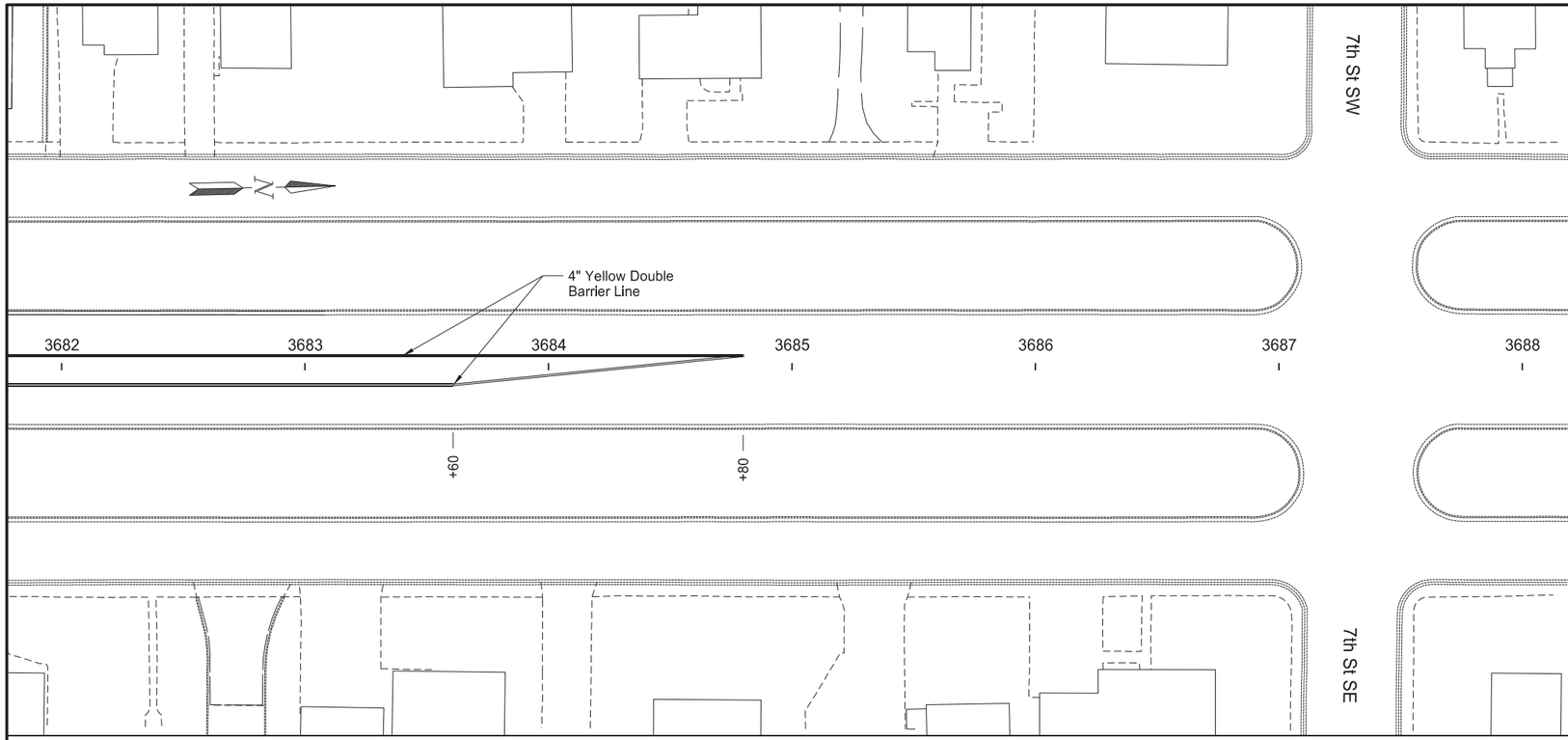

Pavement Marking

ND 22 & 8th St S Intersection

Sta 3682+00 to Sta 3688+00
(SCL 22)

REGISTERED PROFESSIONAL ENGINEER
AMANDA N. VETTER
PE-28802
DATE 2025.12.17 10:08:15-07'00'
NORTH DAKOTA

STATE	PROJECT NO.	SECTION NO.	SHEET NO.
ND	HEN-5-022(144)069	120	4

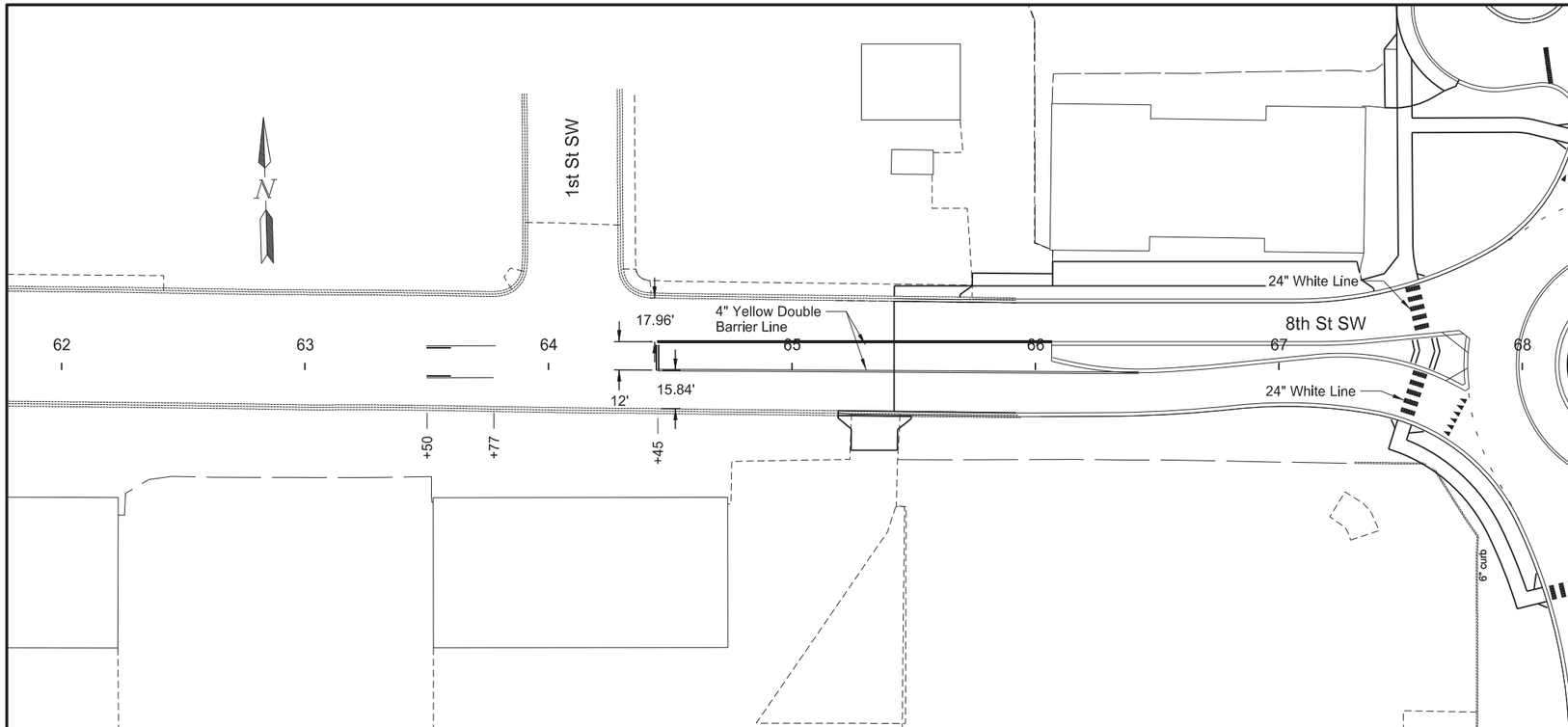

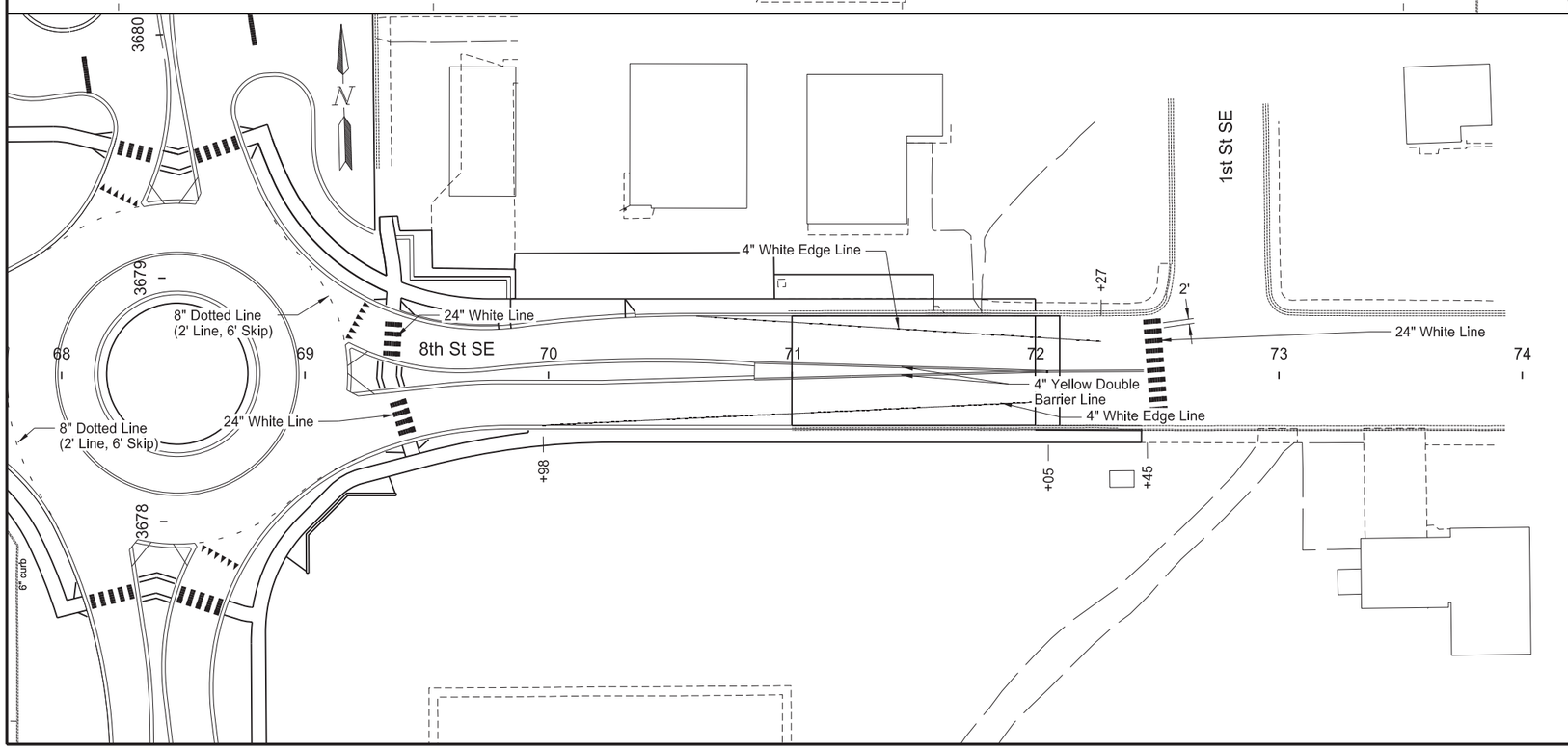

Pavement Marking

ND 22 & 8th St S Intersection

Sta 62+00 to Sta 74+00
(SCL 8)

REGISTERED PROFESSIONAL ENGINEER
AMANDA N. VETTER
PE-28802
DATE 2025.12.17
10:09:08-07'00'
NORTH DAKOTA

STATE	PROJECT NO.	SECTION NO.	SHEET NO.
ND	HEN-5-022(144)069	140	1

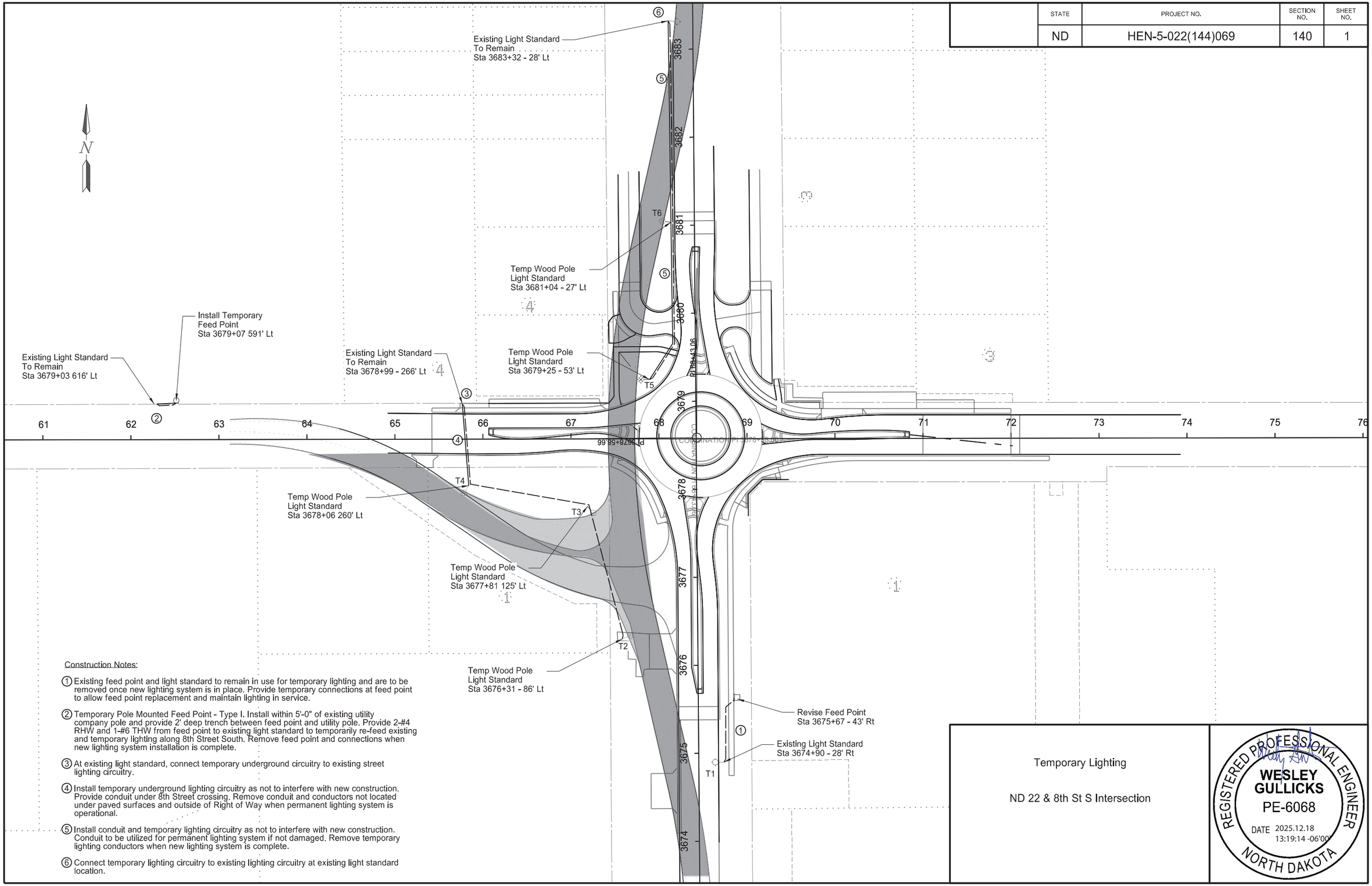

Construction Notes:

1. Existing feed point and light standard to remain in use for temporary lighting and are to be removed once new lighting system is in place. Provide temporary connections at feed point to allow feed point replacement and maintain lighting in service.
2. Temporary Pole Mounted Feed Point - Type I. Install within 5'-0" of existing utility company pole and provide 2' deep trench between feed point and utility pole. Provide 2-#4 RHW and 1-#6 THW from feed point to existing light standard to temporarily re-feed existing and temporary lighting along 8th Street South. Remove feed point and connections when new lighting system installation is complete.
3. At existing light standard, connect temporary underground circuitry to existing street lighting circuitry.
4. Install temporary underground lighting circuitry as not to interfere with new construction. Provide conduit under 8th Street crossing. Remove conduit and conductors not located under paved surfaces and outside of Right of Way when permanent lighting system is operational.
5. Install conduit and temporary lighting circuitry as not to interfere with new construction. Conduit to be utilized for permanent lighting system if not damaged. Remove temporary lighting conductors when new lighting system is complete.
6. Connect temporary lighting circuitry to existing lighting circuitry at existing light standard location.

Temporary Lighting

ND 22 & 8th St S Intersection

REGISTERED PROFESSIONAL ENGINEER
WESLEY GULLICKS
PE-6068
DATE 2025.12.18 13:19:14 -06'00'
NORTH DAKOTA

STATE	PROJECT NO.	SECTION NO.	SHEET NO.
ND	HEN-5-022(144)069	140	2

CONDUIT / CONDUCTOR RUN TABULATION

SEGMENT				CONDUIT RUNS		CABLE TRENCH	CABLE RUNS			
STATION	LIGHT STANDARD	STATION	LIGHT STANDARD	LF	SIZE	LF	LF	CONDUCTOR SIZE, TYPE & QUANITITY	LF	CONDUCTOR SIZE, TYPE & QUANITITY
3674+90 28' RT	FP	3675+67 43' RT	T1	–	2"	–	188	(2) #4 RHW	94	(1) #6 THW
3676+31 86' LT	T2	3677+81 125' LT	T3	–	2"	–	165	Aerial Cable 3 AWG-2, Messenger Cable		
3677+81 125' LT	T3	3678+06 260' LT	T4	–	2"	–	145	Aerial Cable 3 AWG-2, Messenger Cable		
3678+06 260' LT	T4	3678+99 266' LT	EXTG	93	2"	–	202	(2) #4 RHW	101	(1) #6 THW
3679+25 53' LT	T5	3681+04 27' LT	T6	205	2"	–	406	(2) #4 RHW	203	(1) #6 THW
3681+04 27' LT	T6	3683+32 28' LT	EXTG	228	2"	–	472	(2) #4 RHW	236	(1) #6 THW

LIGHTING QUANTITIES

Description	Temporary Feed Point Type II - Pole Mounted	2" Diameter Rigid Conduit	Underground Conductor No 4 Type RHW	Underground Conductor No 6 Type THW	Aerial Cable - 3 AWG 2, Plus Messenger Wire	55' Wood Service Pole 8' MA with Guy - Overhead	55' Wood Service Pole 8' MA - Underground	LED Luminaire	770 4501 Temporary Lighting System **Do not bid individual items separately, but include all items in the this bid item.*
UNIT	EA	LF	LF	LF	LF	EA	EA	EA	
QUANTITY	1	526	1268	634	310	3	2	5	

LIGHT STANDARDS

NO.	STATION	MINIMUM LUMEN OUTPUT	WATTAGE	DISTIRBUTION TYPE	WOOD POLE HEIGHT	MOUNTING HEIGHT	MAST ARM	REMARKS
T1	3674+90 28' RT	EXISTING						
T2	3676+31 86' LT	19,000	120-140	III	55'	40'	8'	
T3	3677+81 125' LT	19,000	120-140	III	55'	40'	8'	
T4	3678+06 260' LT	19,000	120-140	III	55'	40'	8'	
T5	3679+25 53' LT	19,000	120-140	III	55'	40'	8'	
T6	3681+04 27' LT	19,000	120-140	III	55'	40'	8'	

Temporary Lighting

ND 22 & 8th St S Intersection

REGISTERED PROFESSIONAL ENGINEER
WESLEY GULLICKS
PE-6068
DATE 2025.12.18 13:19:36 -06'00'
NORTH DAKOTA

STATE	PROJECT NO.	SECTION NO.	SHEET NO.
ND	HEN-5-022(144)069	140	3

LIGHTING QUANTITIES					
Description	Temporary Feed Point Type II - Pole Mounted	2" Diameter Rigid Conduit	Underground Conductor No 4 Type RHW	Underground Conductor No 6 Type THW	770 4501 Temporary Lighting System **Do not bid individual items separately but include all items in the this bid item.*
UNIT	EA	LF	LF	LF	
QUANTITY	1	267	872	436	

CONDUIT / CONDUCTOR RUN TABULATION										
SEGMENT				CONDUIT RUNS		CABLE TRENCH	CABLE RUNS			
STATION	LIGHT STANDARD	STATION	LIGHT STANDARD	LF	SIZE	LF	LF	CONDUCTOR SIZE, TYPE & QUANITITY	LF	CONDUCTOR SIZE, TYPE & QUANITITY
3696+25 241' LT	FP	3696+26 110' LT	E1	131	2"	–	580	(4) #4 RHW	290	(2) #6 THW
3696+26 110' LT	E1	3696+41 26' RT	SPLICE	136	2"	–	292	(2) #4 RHW	146	(1) #6 THW

Construction Notes

Existing circuitry indicated is based off of as built drawings. Contractor to locate.

1. Temporary Pole Mounted Feed Point - Type II. Install within 5'-0" of existing utility company pole and provide 2' deep trench between feed point and utility pole. Remove when new lighting installation is complete.
2. Existing light standard to remain.
3. Directional bore temporary circuitry. Remove temporary conductors when new lighting system installation is complete.
4. Connect temporary circuitry to existing circuitry in light standard base to re-feed the exsiting lighting on the west side of Highway 22.
5. Locate existing street lighting circuitry in this general area. Utilize a three-way direct buried rated connector block to re-feed the existing lighting on the east side of Highway 22.

Temporary Lighting

ND 22 & 8th St S Intersection

REGISTERED PROFESSIONAL ENGINEER
WESLEY GULLICKS
PE-6068
DATE 2025.12.18 13:20:00 -06'00'
NORTH DAKOTA

STATE	PROJECT NO.	SECTION NO.	SHEET NO.
ND	HEN-5-022(144)069	140	4

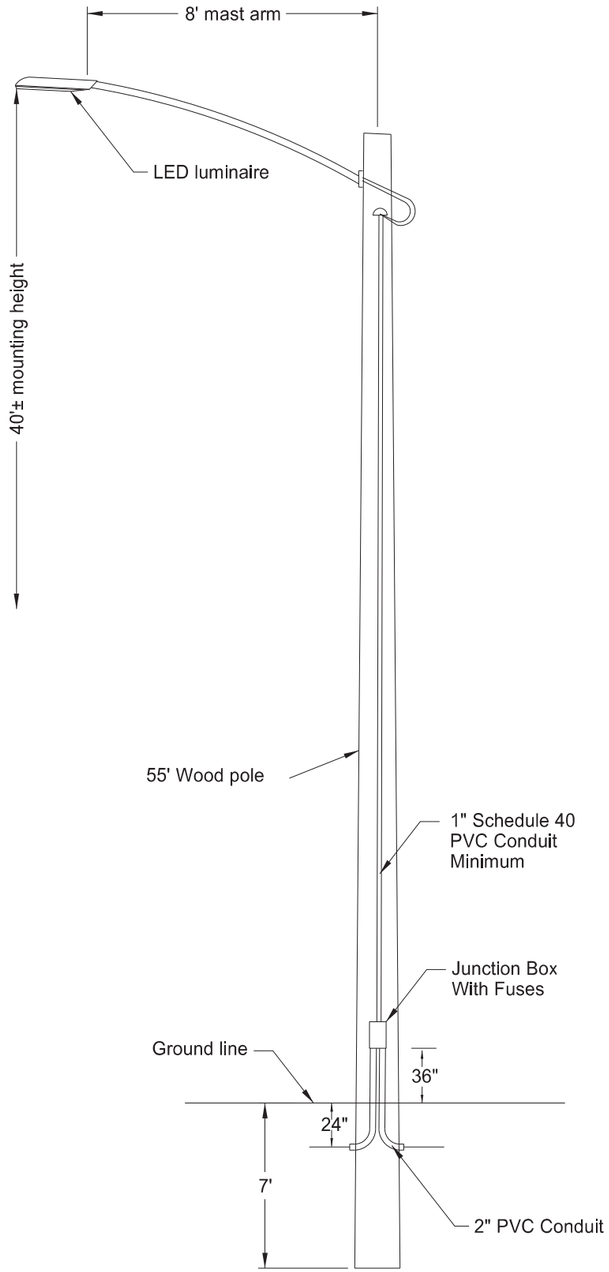

Typical Wood Pole Light Std Detail - Underground
Side View

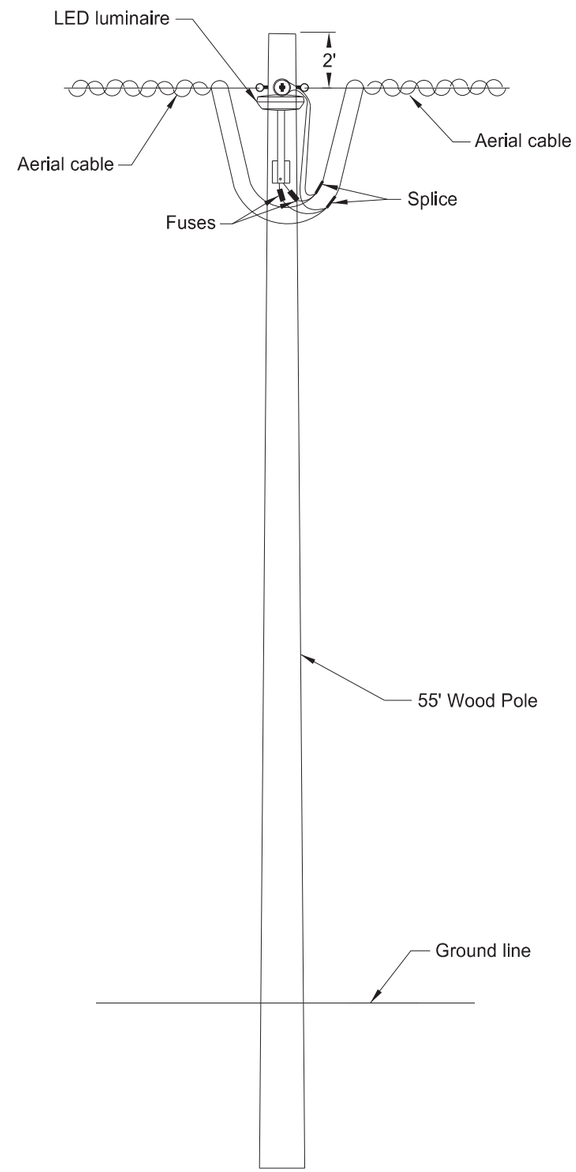

Typical Wood Pole Light Std Detail - Overhead
Front View

Temporary Lighting Details

ND 22 & 8th St S Intersection

REGISTERED PROFESSIONAL ENGINEER
WESLEY GULLICKS
PE-6068
DATE 2025.12.18 13:20:20 -06'00'
NORTH DAKOTA

STATE	PROJECT NO.	SECTION NO.	SHEET NO.
ND	HEN-5-022(144)069	140	5

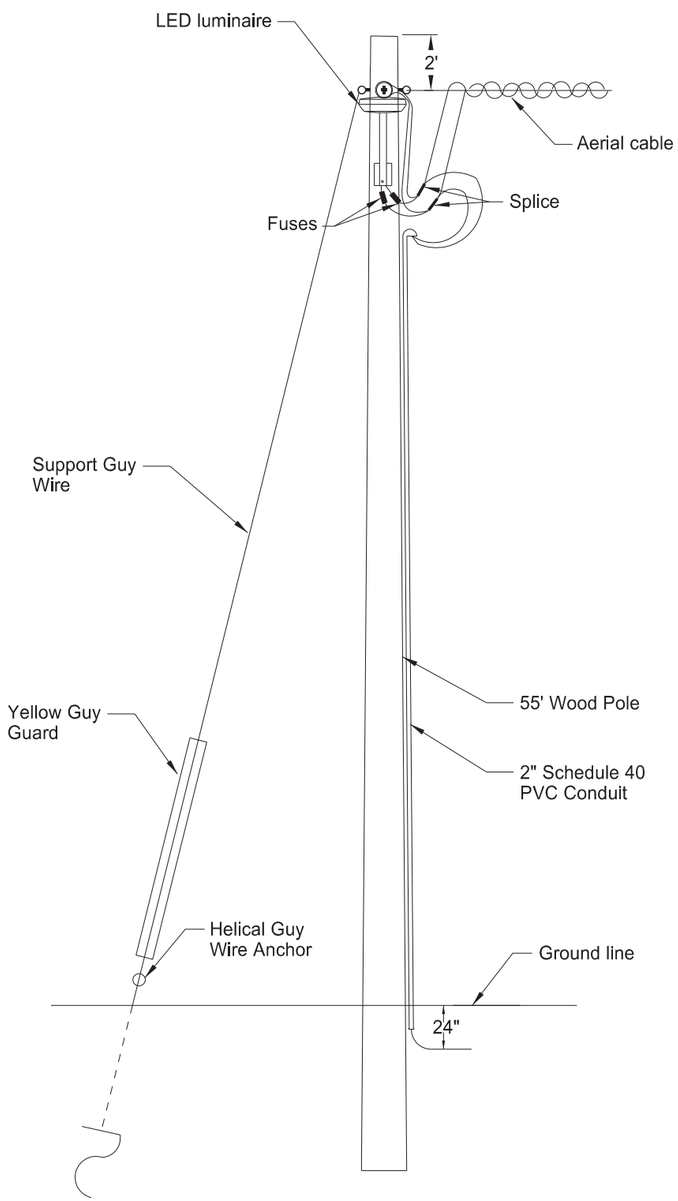

Typical Wood Service Pole Light Std With Guy Wire Detail - Overhead
Front View

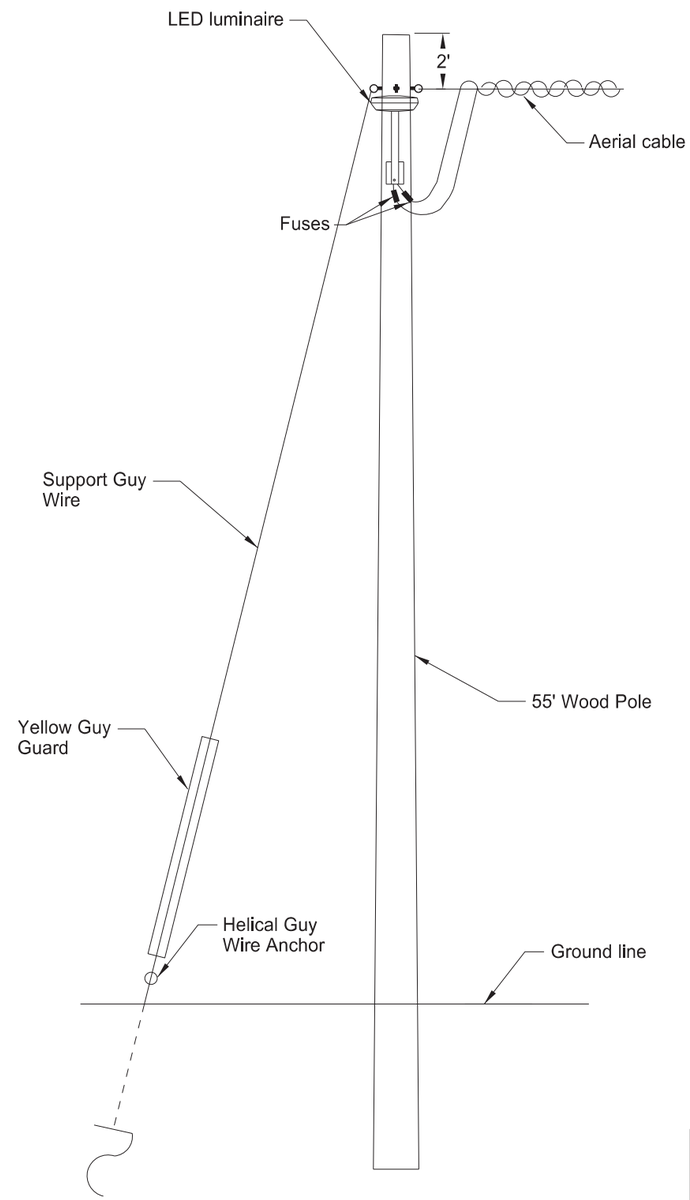

Typical Wood Pole Light Std With Guy Wire Detail - Overhead
Front View

Temporary Lighting Details

ND 22 & 8th St S Intersection

REGISTERED PROFESSIONAL ENGINEER
WESLEY GULLICKS
PE-6068
DATE 2025.12.18 13:20:39 -06'00'
NORTH DAKOTA

STATE	PROJECT NO.	SECTION NO.	SHEET NO.
ND	HEN-5-022(144)069	140	6

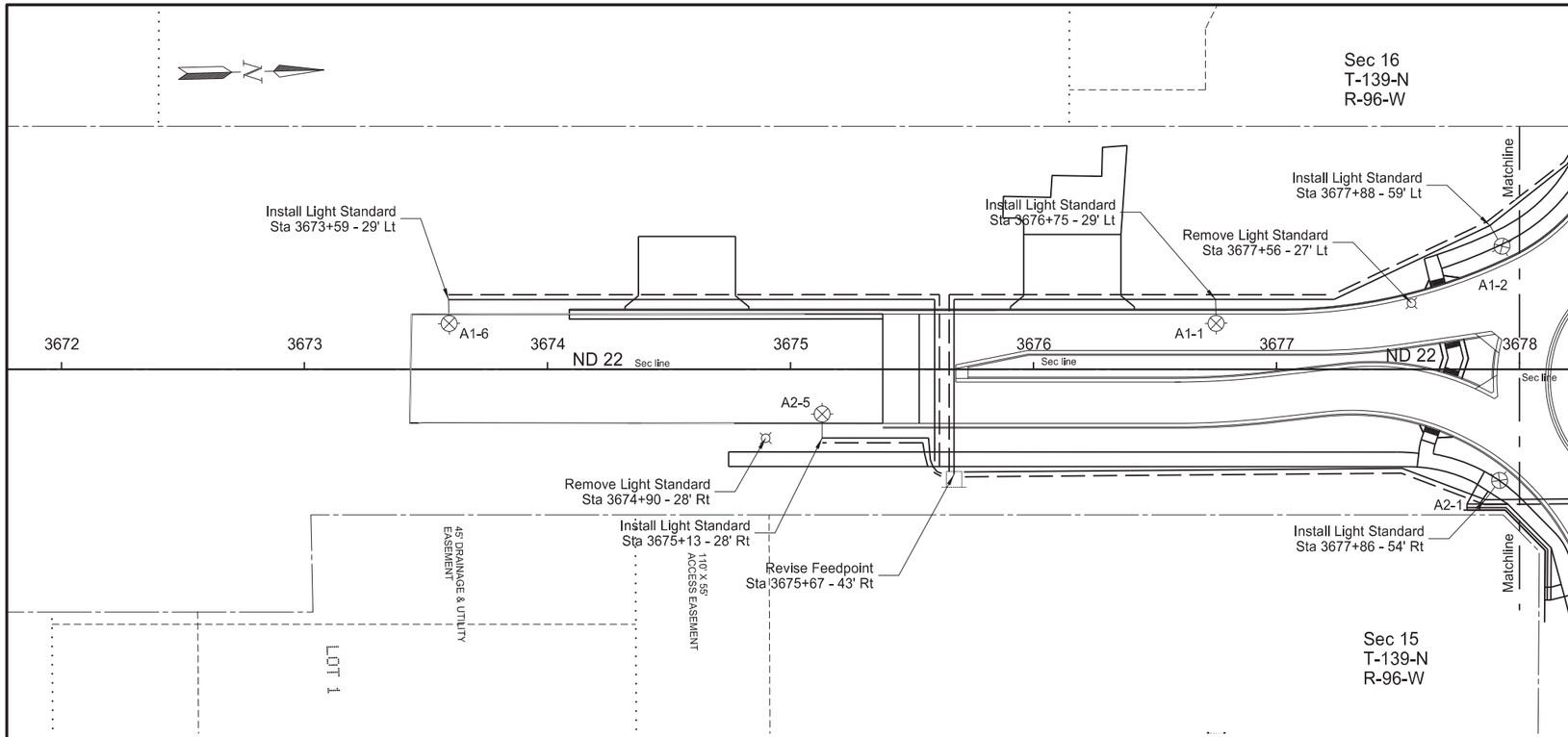

LIGHTING QUANTITIES										
Description	Concrete Foundation - Highway Lighting	2" Diameter Rigid Conduit	Underground Conductor No 2 Type RHW	Underground Conductor No 4 Type RHW	Underground Conductor No 6 Type THW	Light Standard 8FT Mast Arm 30FT Mounting Height - Breakaway	LED Luminaire	Revise Feed Point	Remove Light Standard	770 0004 Lighting System B **Do not bid individual items separately but include all items in the this bid item.*
UNIT	EA	LF	LF	LF	LF	EA	EA	EA	EA	
QUANTITY	5	605	1182	754	649	5	5	1	2	

CONDUIT / CONDUCTOR RUN TABULATION										
SEGMENT				CONDUIT RUNS		CABLE TRENCH	CABLE RUNS			
STATION	LIGHT STANDARD	STATION	LIGHT STANDARD	LF	SIZE	LF	LF	CONDUCTOR SIZE, TYPE & QUANITITY	LF	CONDUCTOR SIZE, TYPE & QUANITITY
3675+67 43' RT	FPA	3675+13 28' RT	A2-5	69	2"	–	166	(2) #4 RHW	83	(1) #6 THW
3675+67 43' RT	FPA	3677+86 54' RT	A2-1	222	2"	–	472	(2) #2 RHW	236	(1) #6 THW
3677+86 54' RT	A2-1	3678+00 56' RT	–	14	2"	–	36	(2) #2 RHW	18	(1) #6 THW
3675+67 43' RT	FPA	3675+67 29' LT	–	72	2"	–	164	(2) #2 RHW	82	(1) #6 THW
				72	2"	–	164	(2) #4 RHW	82	(1) #6 THW
3675+67 29' LT	–	3676+75 29' LT	A1-1	108	2"	–	224	(2) #2 RHW	112	(1) #6 THW
3676+75 29' LT	A1-1	3677+88 59' LT	A1-2	119	2"	–	254	(2) #2 RHW	127	(1) #6 THW
3677+88 59' LT	A1-2	3678+00 61' LT	–	12	2"	–	32	(2) #2 RHW	16	(1) #6 THW
3675+67 29' LT	–	3673+59 29' LT	A1-6	208	2"	–	424	(2) #4 RHW	212	(1) #6 THW

LIGHT STANDARDS							
NO.	STATION	LUMINAIRE	CIRCUIT	IES - TYPE	POLE HEIGHT	MAST ARM	REMARKS
A1-1	3676+75 29' LT	19,000 LM LED	FPA-1	III	30'	8'	
A1-2	3677+88 59' LT	19,000 LM LED	FPA-1	III	30'	8'	
A1-6	3673+59 29' LT	19,000 LM LED	FPA-1	III	30'	8'	
A2-1	3677+86 54' RT	19,000 LM LED	FPA-2	III	30'	8'	
A2-5	3675+13 28' RT	19,000 LM LED	FPA-2	III	30'	8'	

Lighting Layouts

ND 22 & 8th St S Intersection

Sta 3672+00 to Sta 3678+00

REGISTERED PROFESSIONAL ENGINEER
WESLEY GULLICKS
PE-6068
DATE 2025.12.18 13:20:59 -06'00'
NORTH DAKOTA

STATE	PROJECT NO.	SECTION NO.	SHEET NO.
ND	HEN-5-022(144)069	140	7

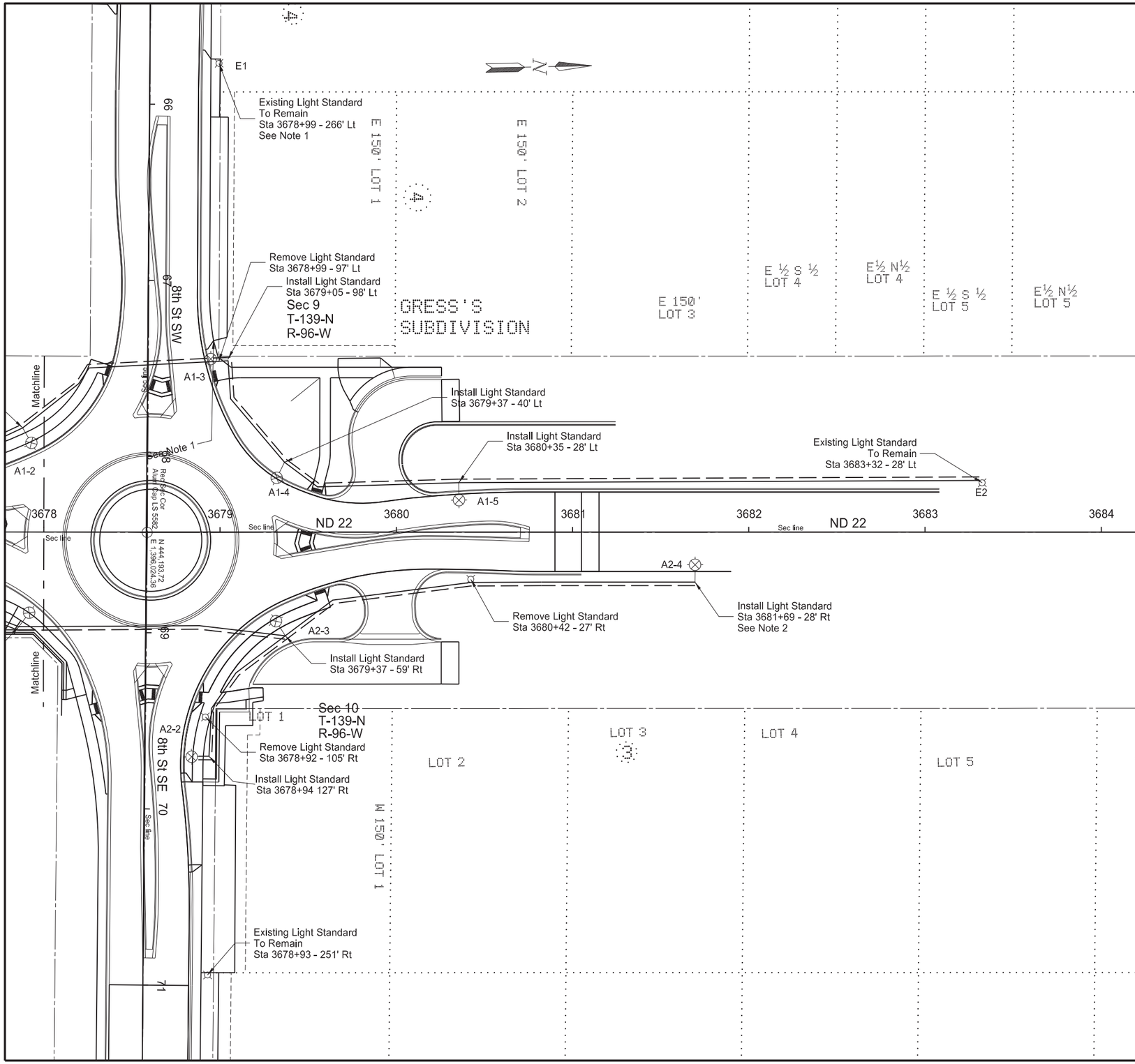

Construction Notes

① Remove existing conductors from conduit between light standard to be removed and existing light standard E1. Modify and extend conduit to new light standard A1-3 location. Provide new conductors.

② Expose existing direct buried multi-conductor cables, protect and reroute into new light standard.

Lighting Layouts

ND 22 & 8th St S Intersection

Sta 3678+00 to Sta 3684+00

REGISTERED PROFESSIONAL ENGINEER
WESLEY GULLICKS
PE-6068
DATE 2025.12.18 13:21:20 -06'00'
NORTH DAKOTA

STATE	PROJECT NO.	SECTION NO.	SHEET NO.
ND	HEN-5-022(144)069	140	8

LIGHTING QUANTITIES

Description	Concrete Foundation - Highway Lighting	2" Diameter Rigid Conduit	Underground Conductor No 2 Type RHW	Underground Conductor No 4 Type RHW	Underground Conductor No 6 Type THW	Light Standard 8FT Mast Arm 30FT Mounting Height - Breakaway	LED Luminaire	Remove Light Standard
UNIT	EA	LF	LF	LF	LF	EA	EA	EA
QUANTITY	6	1067	2012	542	1277	6	6	3

770 0004 Lighting System B
***Do not bid individual items separately but include all items in the this bid item.*

CONDUIT / CONDUCTOR RUN TABULATION

SEGMENT				CONDUIT RUNS		CABLE TRENCH	CABLE RUNS			
STATION	LIGHT STANDARD	STATION	LIGHT STANDARD	LF	SIZE	LF	LF	CONDUCTOR SIZE, TYPE & QUANITITY	LF	CONDUCTOR SIZE, TYPE & QUANITITY
3678+00 61' LT	–	3679+05 98' LT	A1-3	115	2"	–	238	(2) #2 RHW	119	(1) #6 THW
3679+05 98' LT	A1-3	3679+37 40' LT	A1-4	72	2"	–	160	(2) #2 RHW	80	(1) #6 THW
3679+37 40' LT	A1-4	3680+35 28' LT	A1-5	105	2"	–	226	(2) #2 RHW	113	(1) #6 THW
3680+35 28' LT	A1-5	3683+32 28' LT	E2	296	2"	–	608	(2) #2 RHW	304	(1) #6 THW
3679+05 98' LT	–	3678+99 266' LT	E1	15	2"	–	354	(2) #4 RHW	177	(1) #6 THW
3678+00 56' RT	–	3679+37 59' RT	A2-3	138	2"	–	284	(2) #2 RHW	142	(1) #6 THW
3679+37 59' RT	A2-3	3681+69 28' RT	A2-4	240	2"	–	496	(2) #2 RHW	248	(1) #6 THW
3679+37 59' RT	A2-3	3678+94 127' RT	A2-2	86	2"	–	188	(2) #4 RHW	94	(1) #6 THW

LIGHT STANDARDS

NO.	STATION	LUMINAIRE	CIRCUIT	IES - TYPE	POLE HEIGHT	MAST ARM	REMARKS
A1-3	3679+05 98' LT	19,000 LM LED	FPA-1	III	30'	8'	
A1-4	3679+37 40' LT	19,000 LM LED	FPA-1	III	30'	8'	
A1-5	3680+35 28' LT	19,000 LM LED	FPA-1	III	30'	8'	
A2-2	3678+94 127' RT	19,000 LM LED	FPA-2	III	30'	8'	
A2-3	3679+37 59' RT	19,000 LM LED	FPA-2	III	30'	8'	
A2-4	3681+69 28' RT	19,000 LM LED	FPA-2	III	30'	8'	

Lighting Quantities

ND 22 & 8th St S Intersection

REGISTERED PROFESSIONAL ENGINEER
WESLEY GULLICKS
PE-6068
DATE 2025.12.18 13:21:38 -06'00'
NORTH DAKOTA

STATE	PROJECT NO.	SECTION NO.	SHEET NO.
ND	HEN-5-022(144)069	140	9

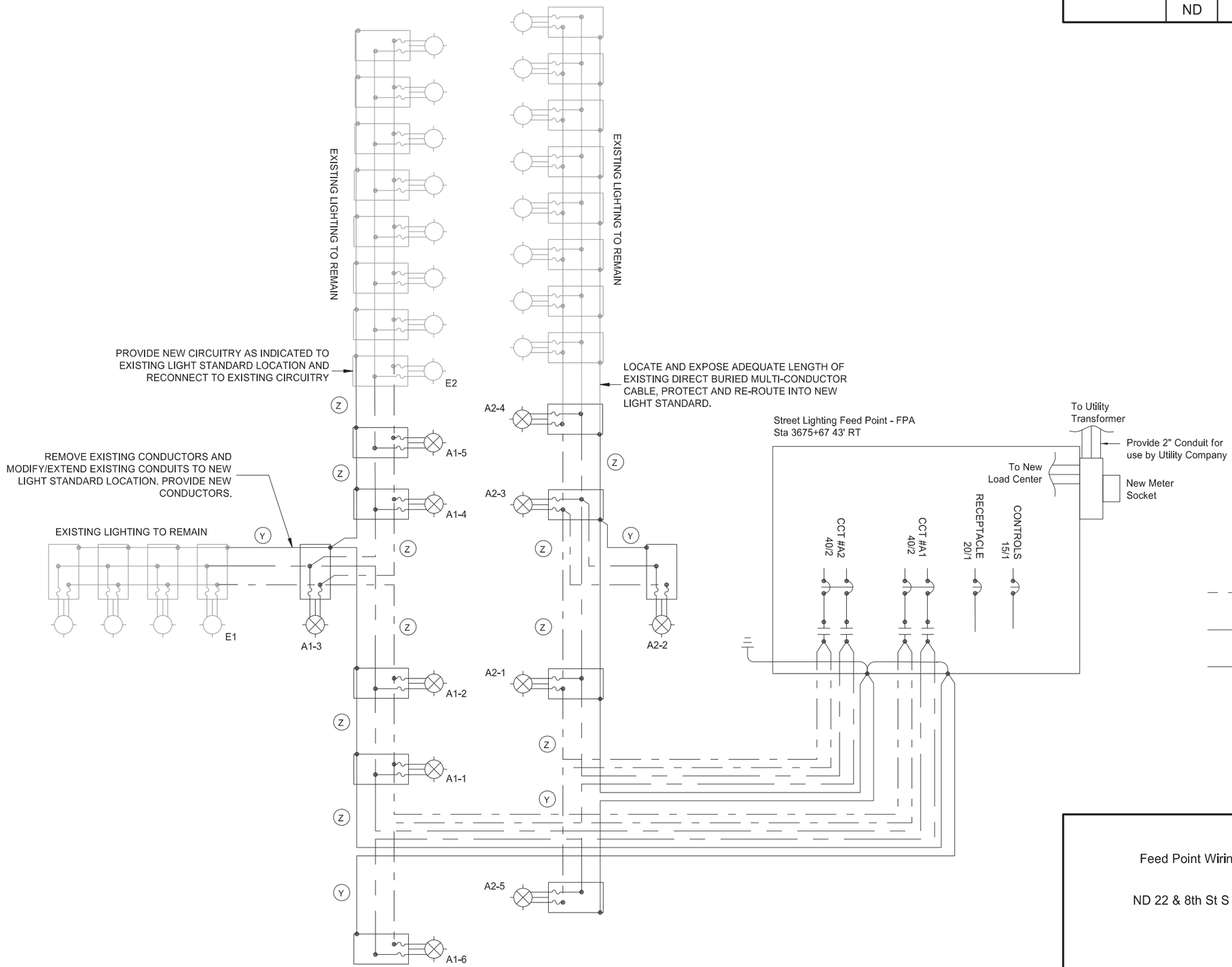

LEGEND

- New LED Luminaire
- Existing Luminaire
- Light Standard with Single Luminaire and In-Line Fuses
- Phase Conductor (A) - RED Outer Jacket
- Phase Conductor (B) - BLUE Outer Jacket
- Ground Conductor - GREEN Outer Jacket
- (Y) 2-#4 RHW & 1-#6 THW
- (Z) 2-#2 RHW & 1-#6 THW

Feed Point Wiring Diagram

ND 22 & 8th St S Intersection

REGISTERED PROFESSIONAL ENGINEER
WESLEY GULLICKS
PE-6068
DATE 2025.12.18 13:21:59 -06'00'
NORTH DAKOTA

STATE	PROJECT NO.	SECTION NO.	SHEET NO.
ND	HEN-5-022(144)069	140	10

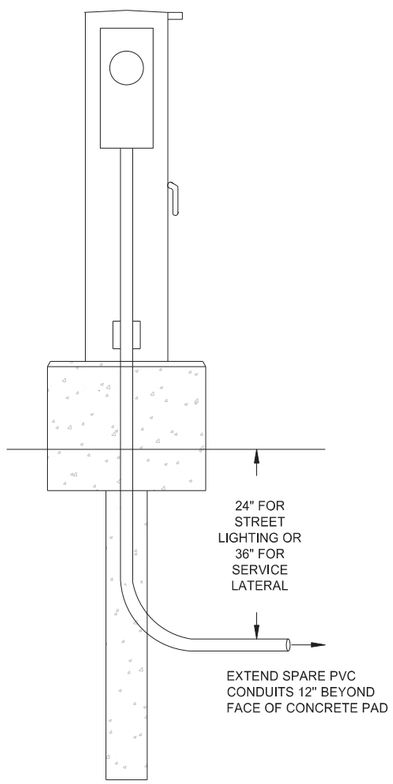

SIDE

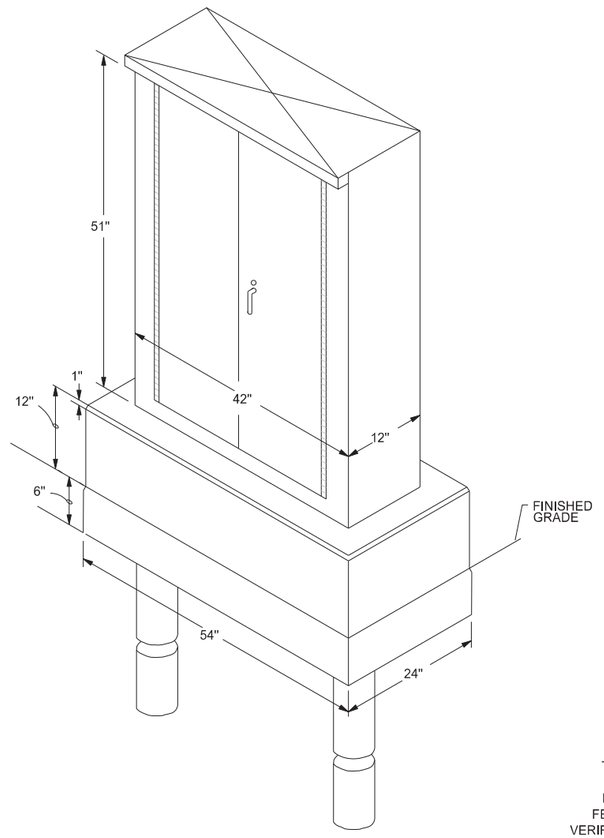

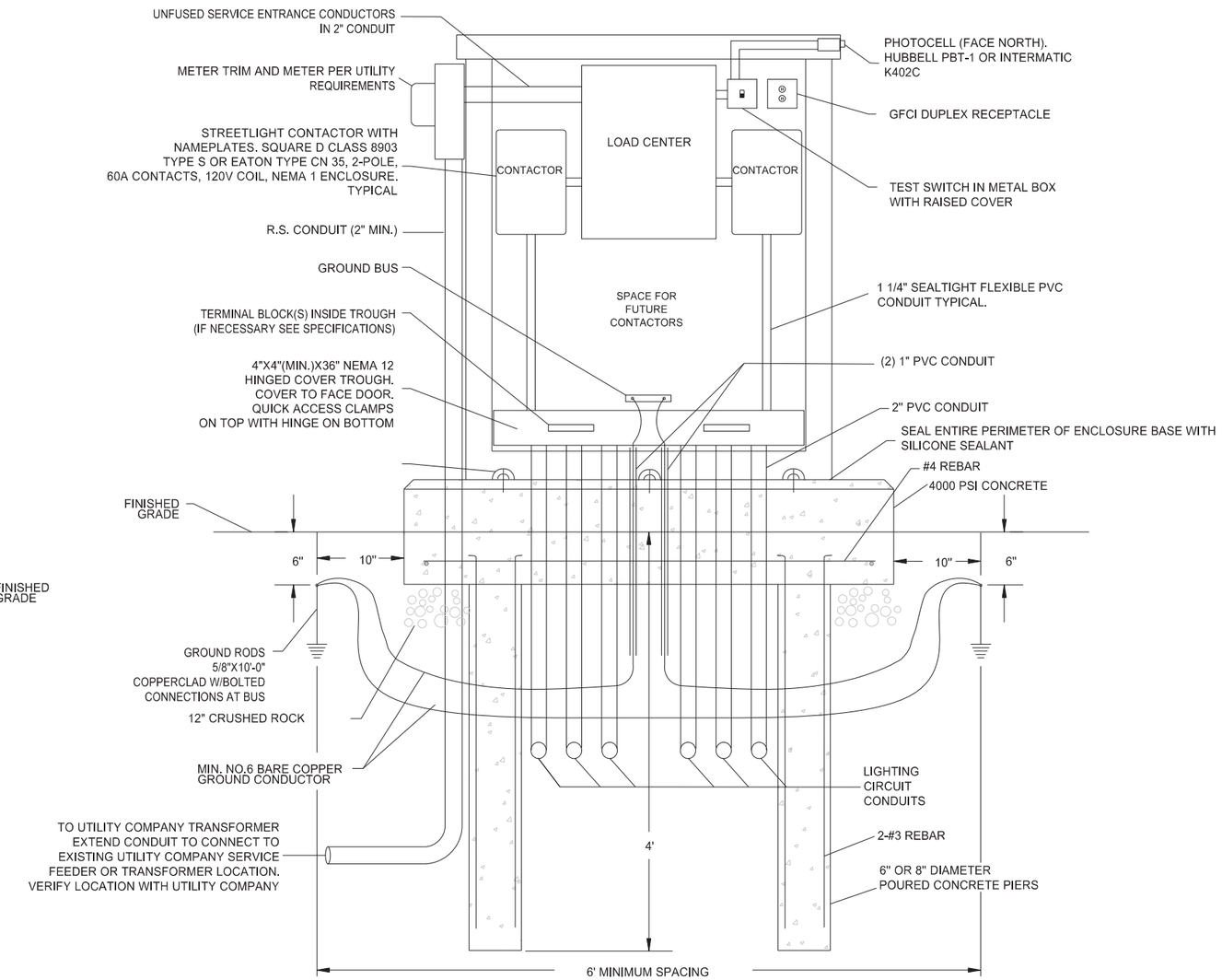

FRONT VIEW - STANDARD FEEDPOINT

Feed Point Details

ND 22 & 8th St S Intersection

REGISTERED PROFESSIONAL ENGINEER
WESLEY GULLICKS
PE-6068
DATE 2025.12.18 13:22:20 -06'00'
NORTH DAKOTA

STATE	PROJECT NO.	SECTION NO.	SHEET NO.
ND	HEN-5-022(144)069	140	11

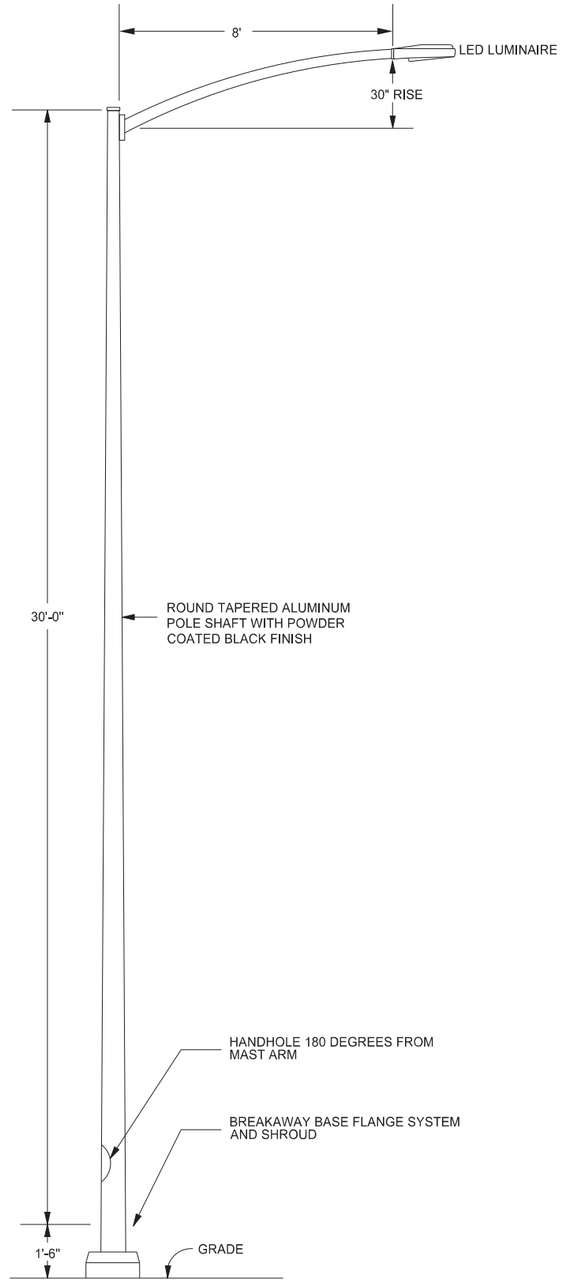

SINGLE MAST ARM LIGHT STANDARD DETAIL

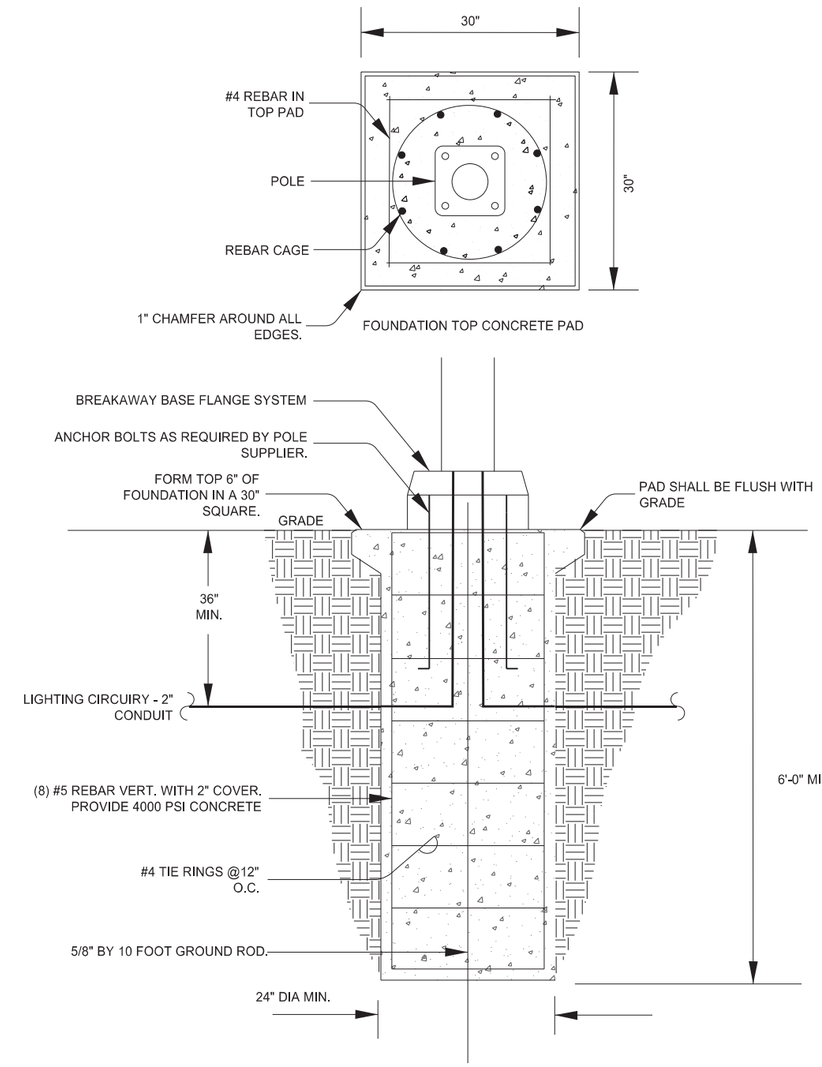

LIGHT STANDARD BASE DETAIL

Light Standard Details

ND 22 & 8th St S Intersection

REGISTERED PROFESSIONAL ENGINEER
WESLEY GULLICKS
PE-6068
DATE 2025.12.18 13:22:40 -06'00'
NORTH DAKOTA