STATE	PROJECT NO.	SECTION NO.	SHEET NO.
ND	IM-1-094(191)166	200	1

106th St NE

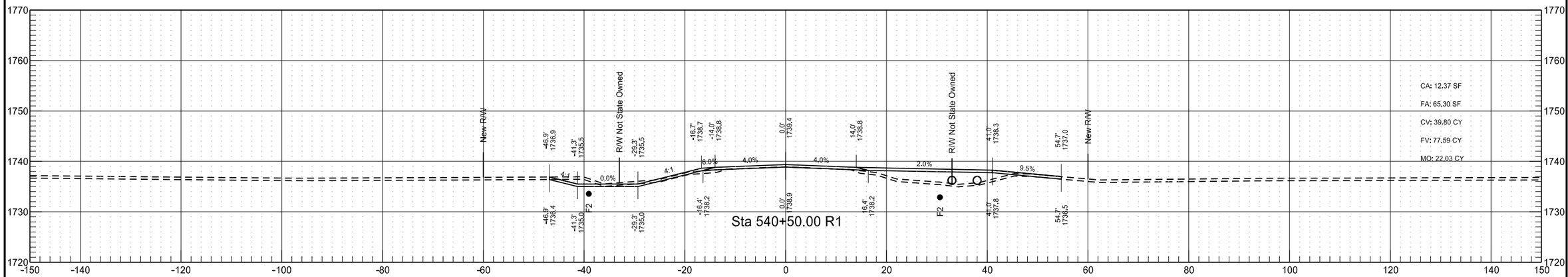

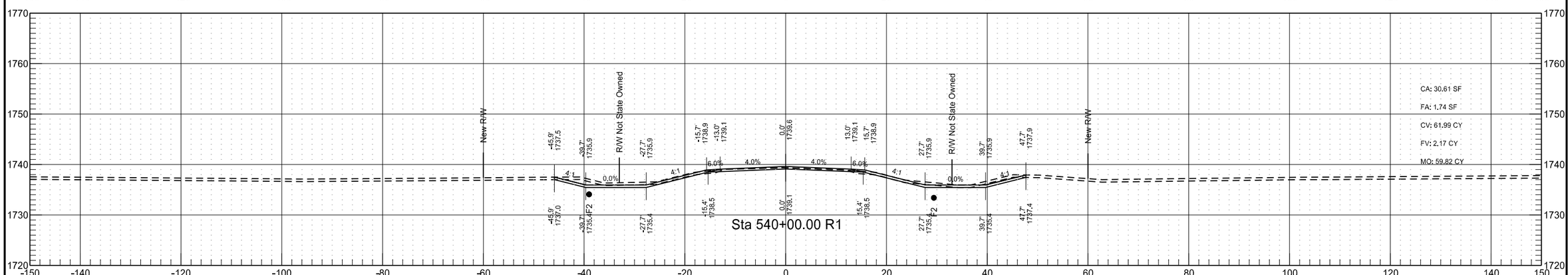

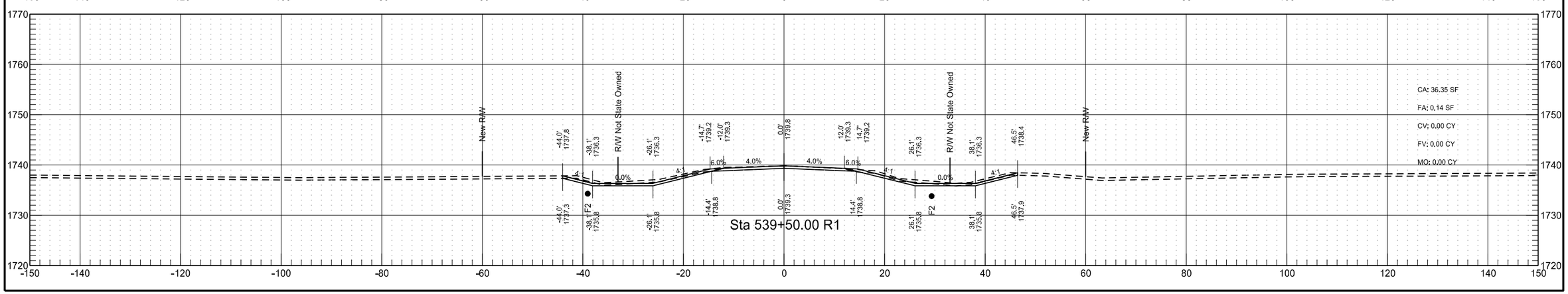

STATE	PROJECT NO.	SECTION NO.	SHEET NO.
ND	IM-1-094(191)166	200	2

106th St NE

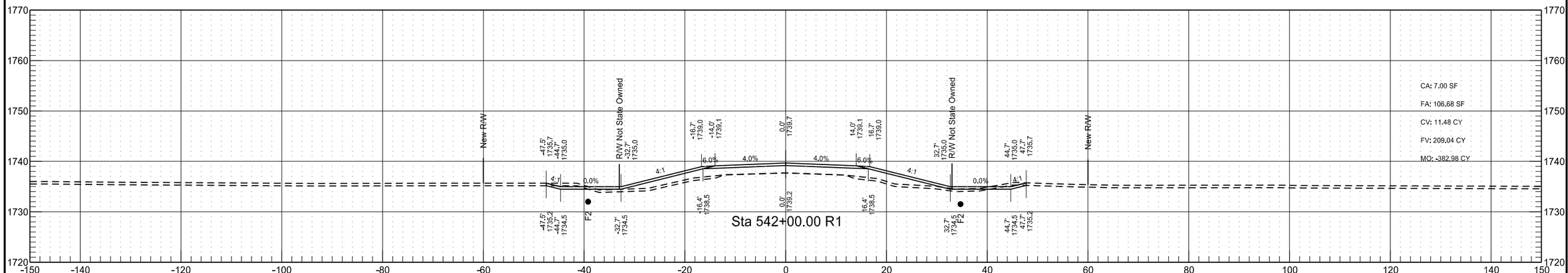

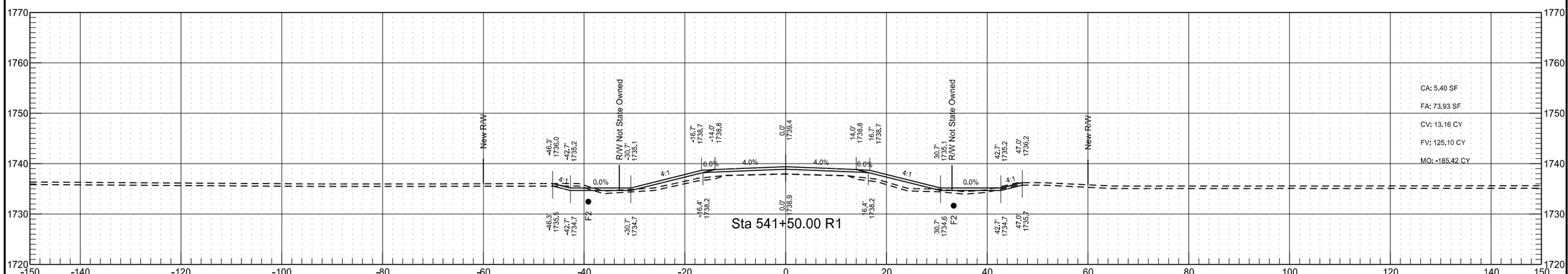

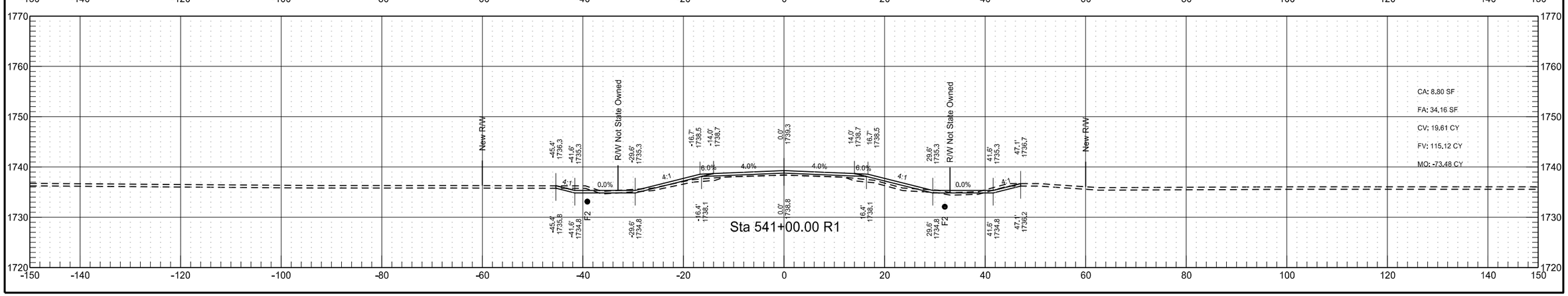

STATE	PROJECT NO.	SECTION NO.	SHEET NO.
ND	IM-1-094(191)166	200	3

106th St NE

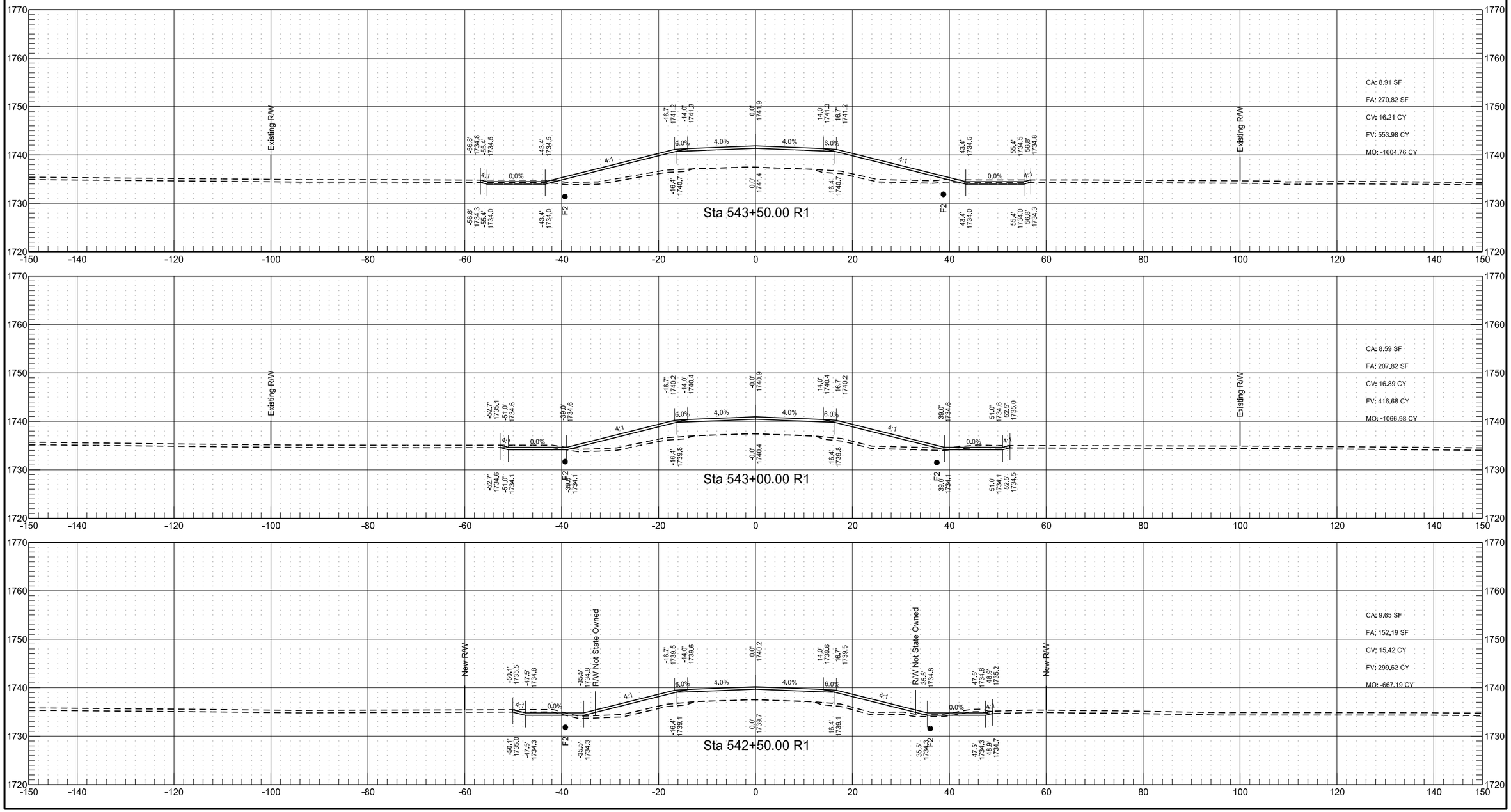

STATE	PROJECT NO.	SECTION NO.	SHEET NO.
ND	IM-1-094(191)166	200	4

106th St NE

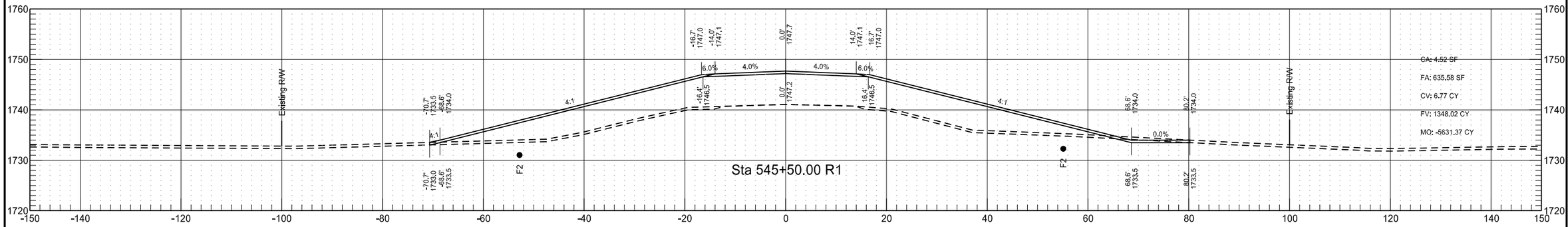

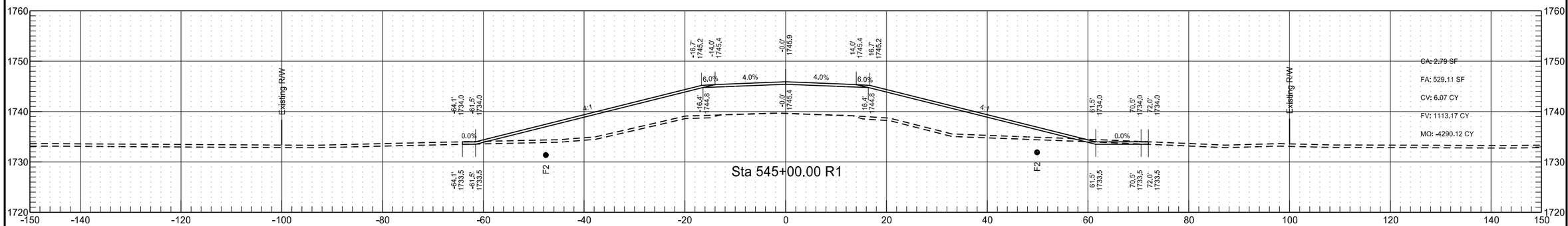

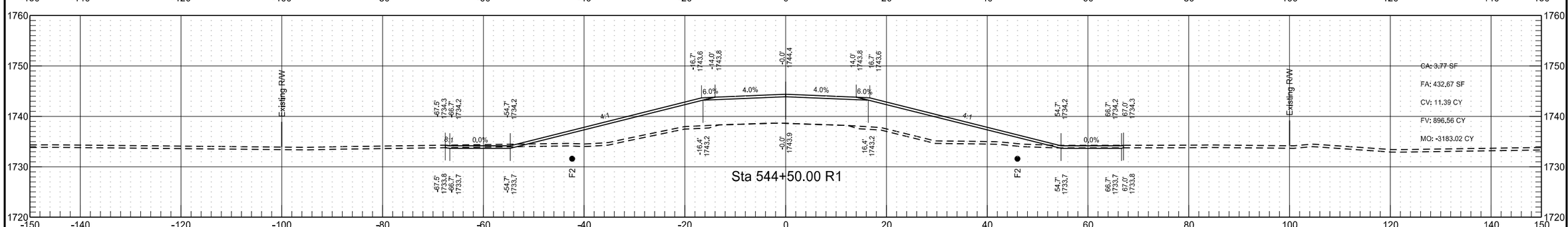

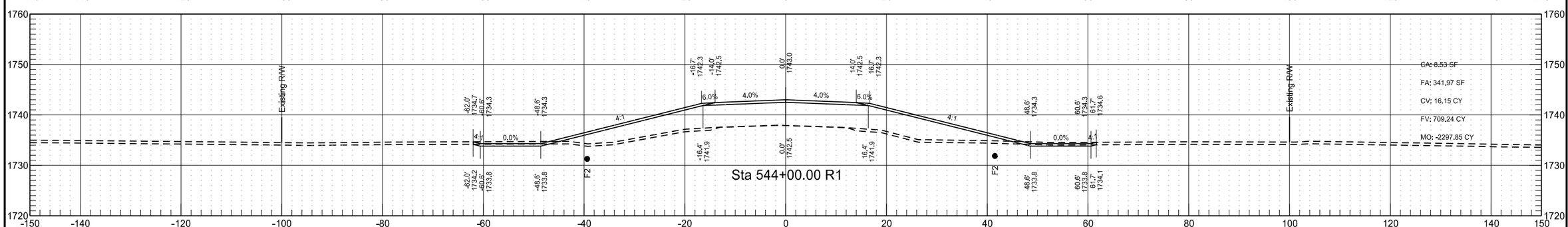

106th St NE

STATE	PROJECT NO.	SECTION NO.	SHEET NO.
ND	IM-1-094(191)166	200	5

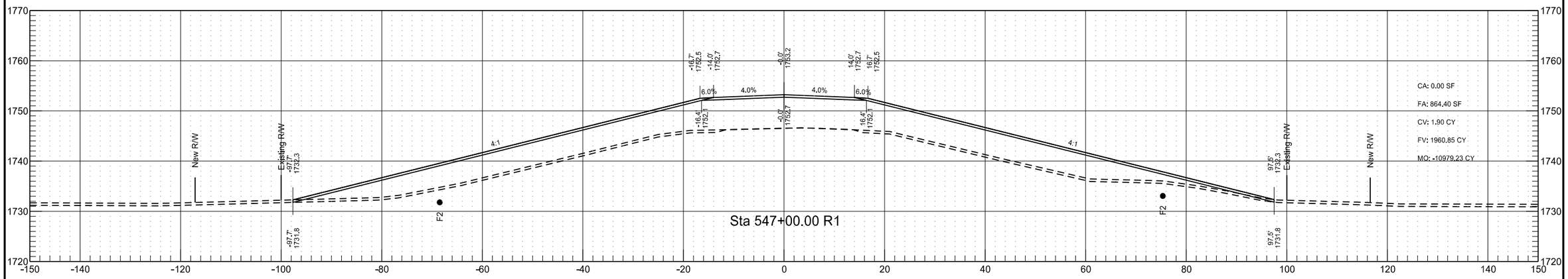

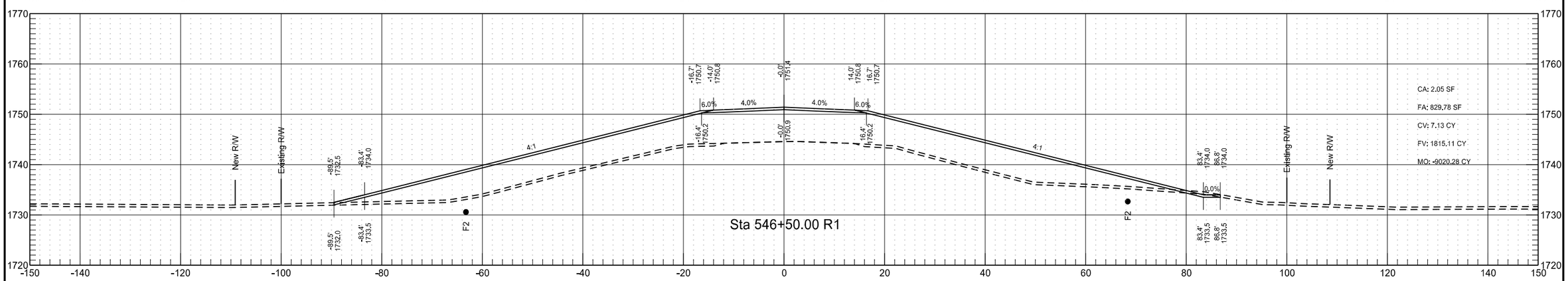

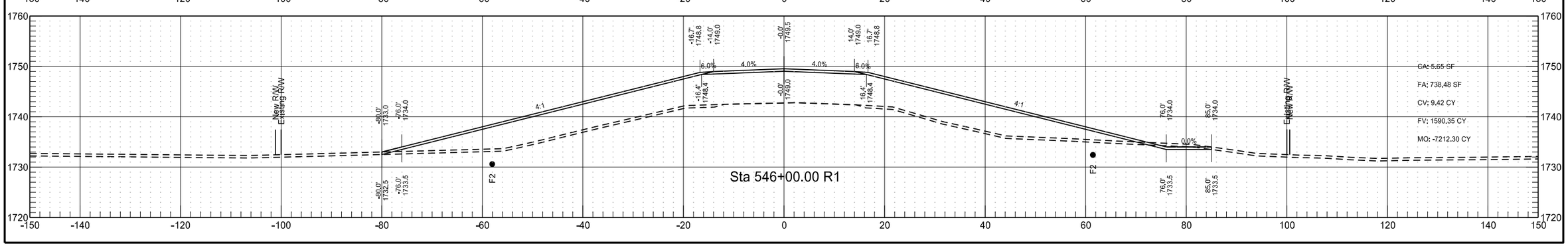

STATE	PROJECT NO.	SECTION NO.	SHEET NO.
ND	IM-1-094(191)166	200	6

106th St NE

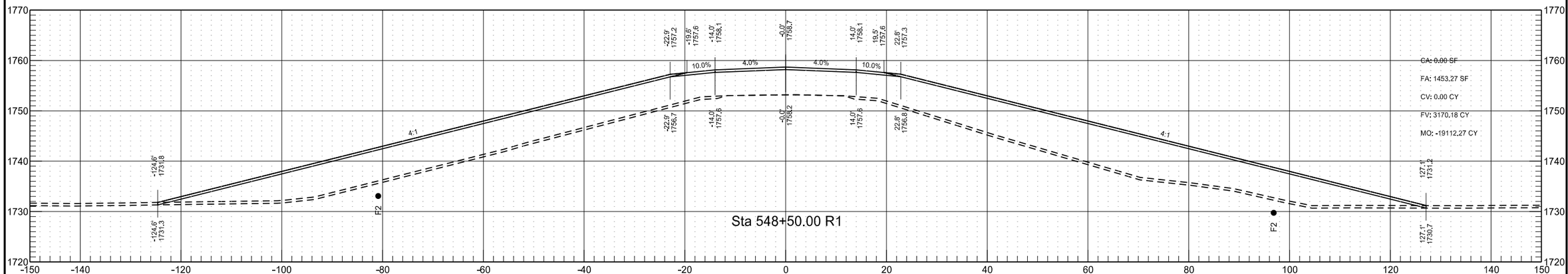

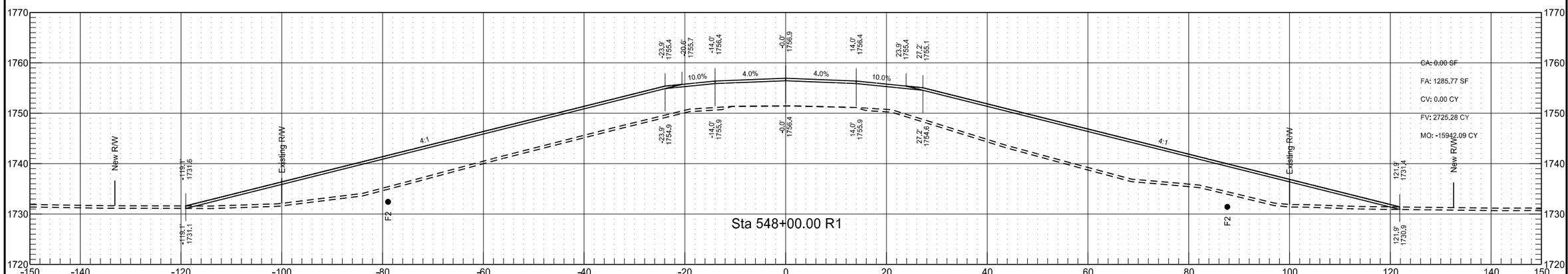

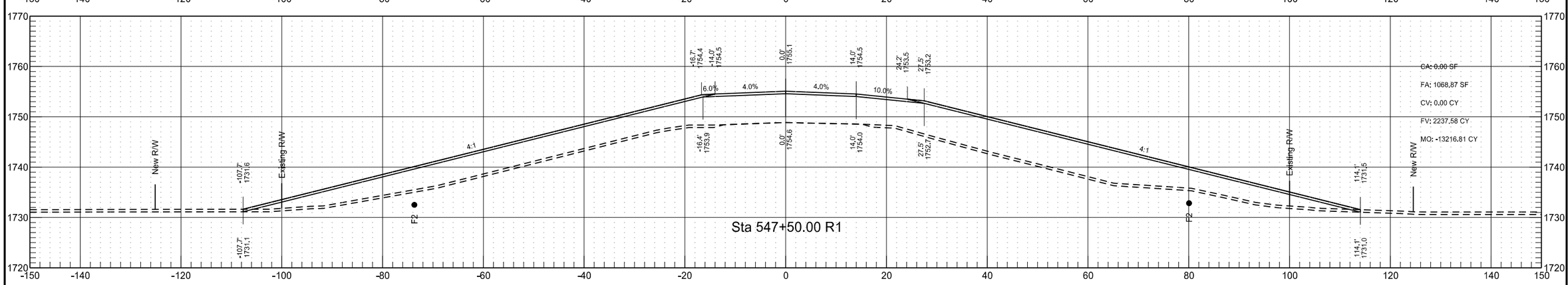

STATE	PROJECT NO.	SECTION NO.	SHEET NO.
ND	IM-1-094(191)166	200	7

106th St NE

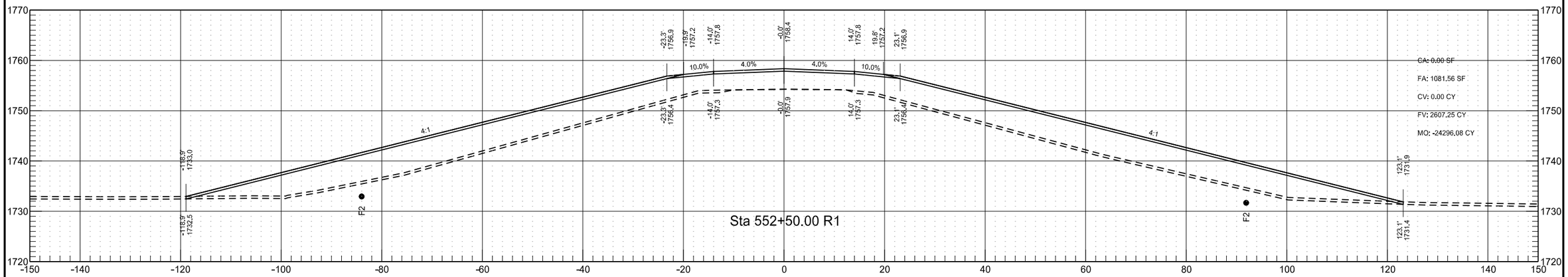

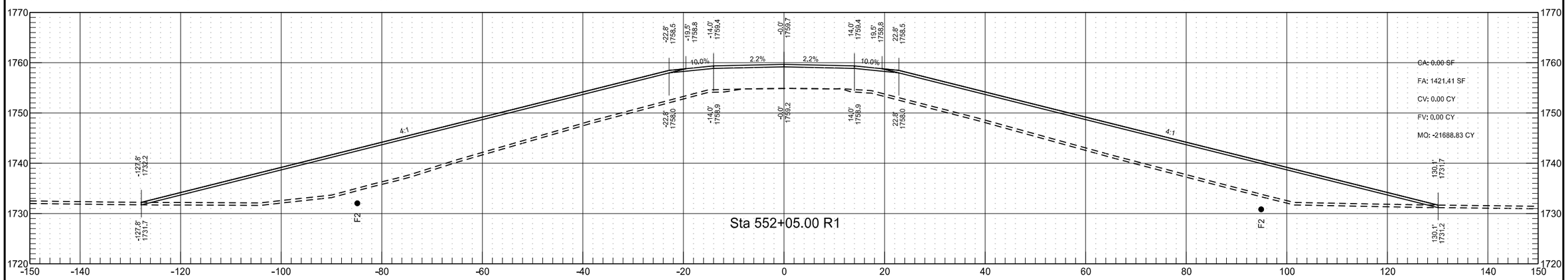

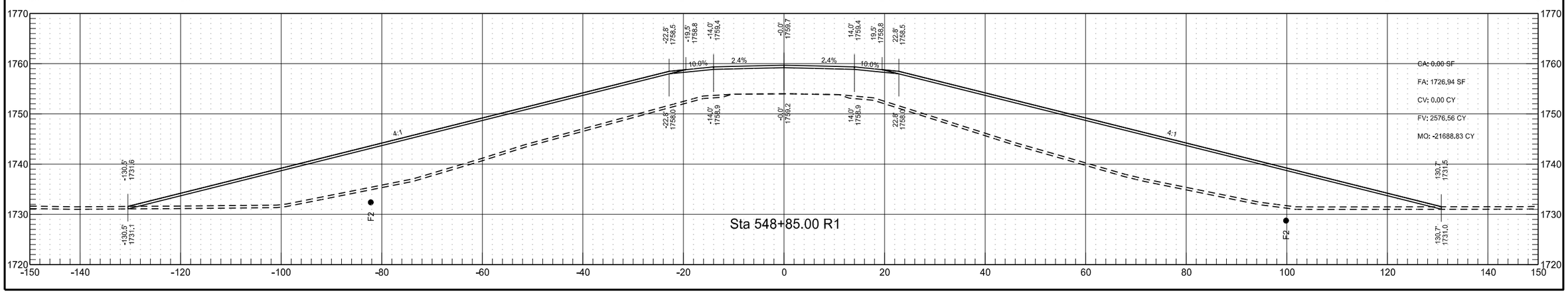

STATE	PROJECT NO.	SECTION NO.	SHEET NO.
ND	IM-1-094(191)166	200	8

106th St NE

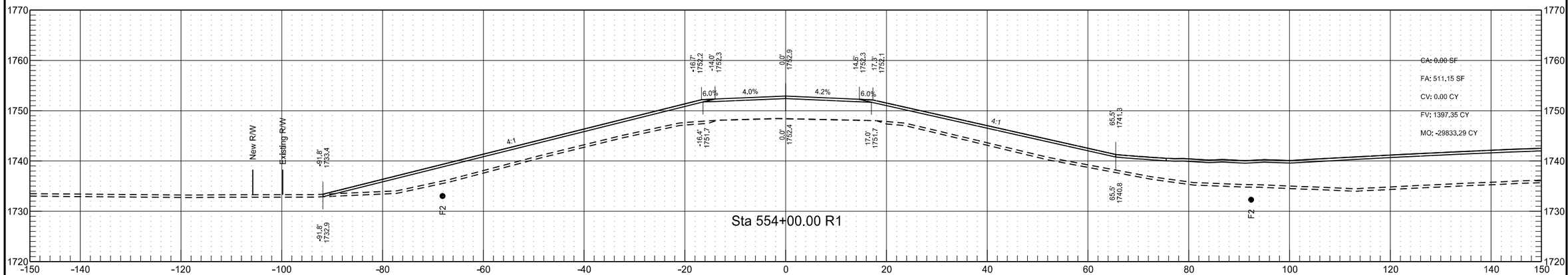

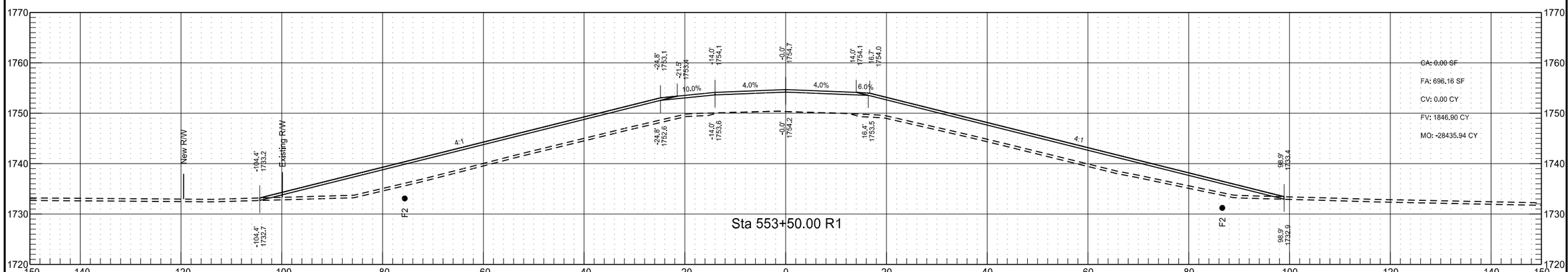

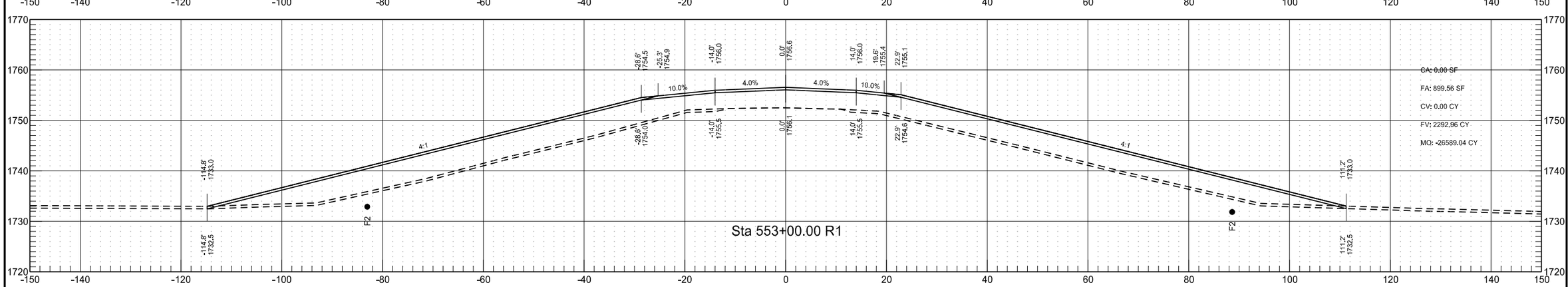

STATE	PROJECT NO.	SECTION NO.	SHEET NO.
ND	IM-1-094(191)166	200	9

106th St NE

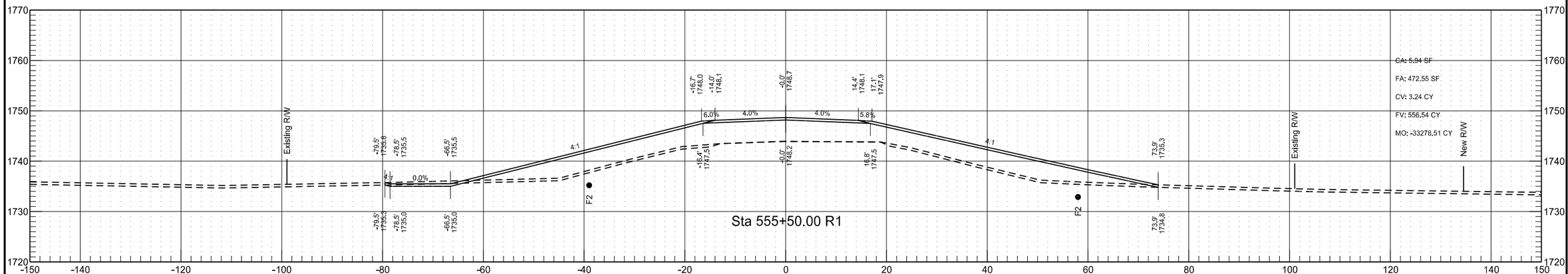

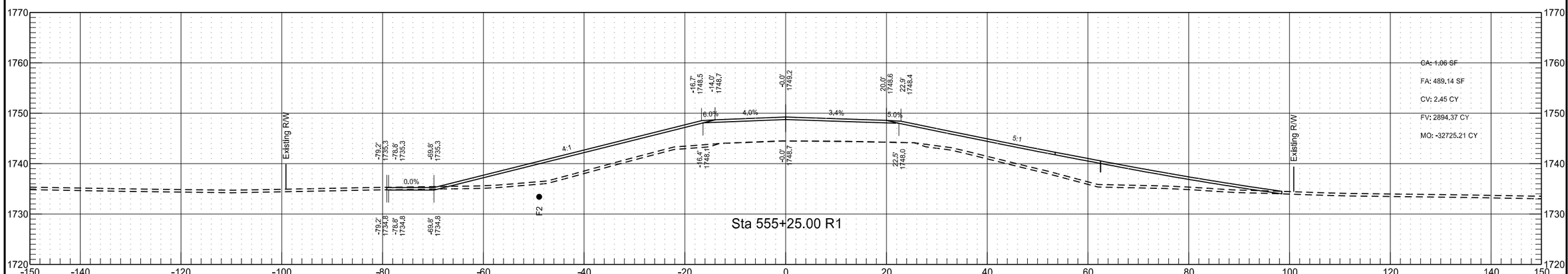

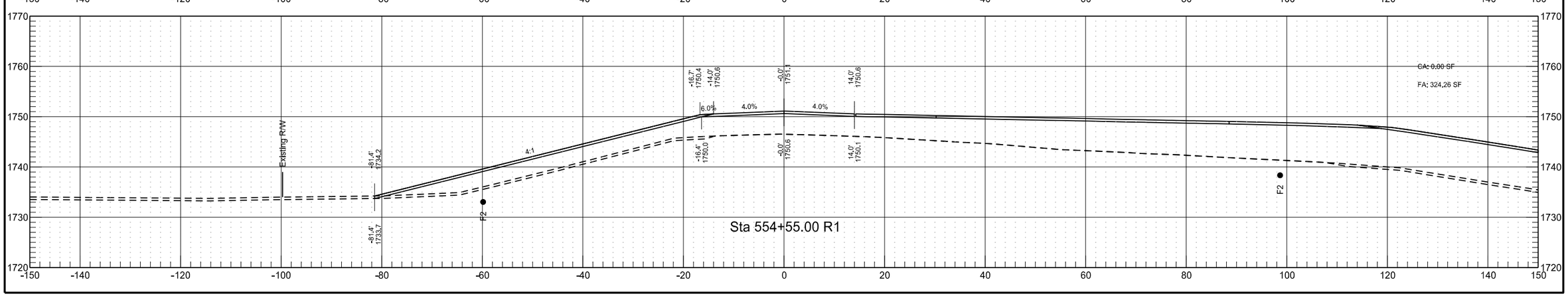

106th St NE

STATE	PROJECT NO.	SECTION NO.	SHEET NO.
ND	IM-1-094(191)166	200	10

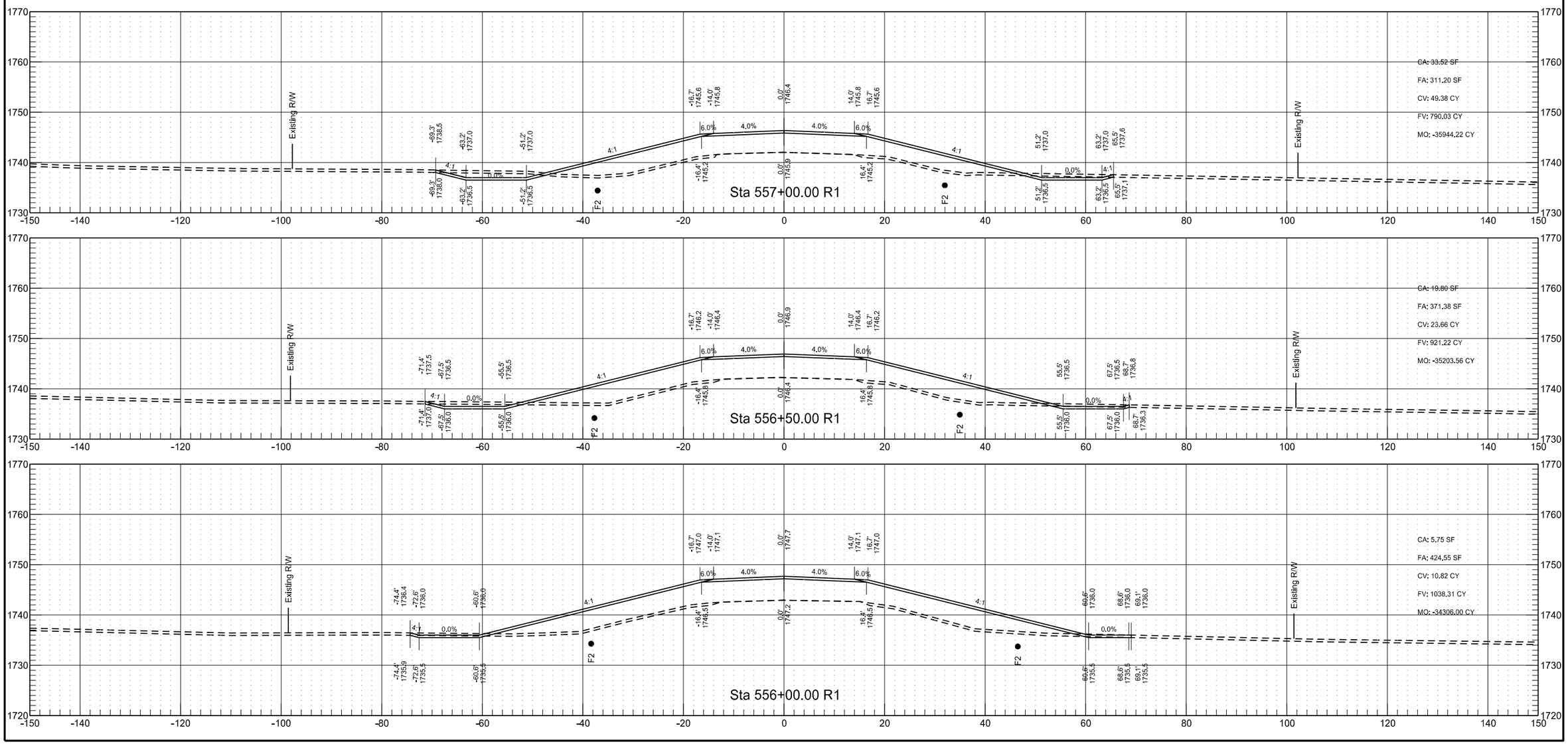

7/21/2020 9:39:09 AM jrensch R:\project\10094166.191\design\Sheets\200XS_001_106ST.dgn

106th St NE

STATE	PROJECT NO.	SECTION NO.	SHEET NO.
ND	IM-1-094(191)166	200	11

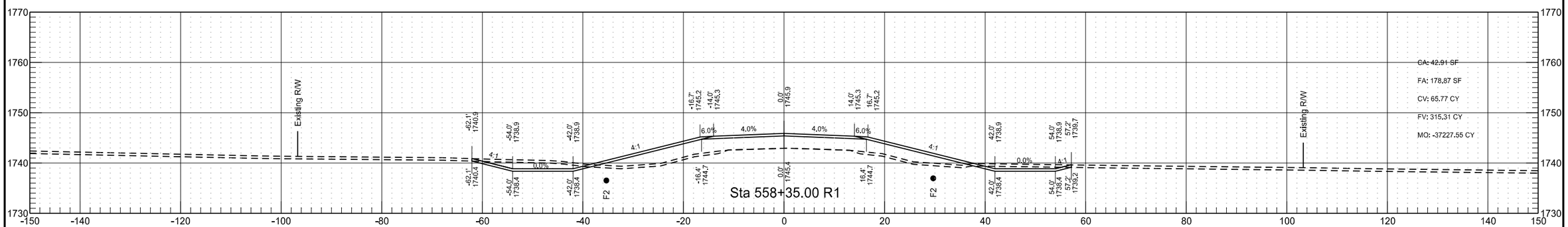

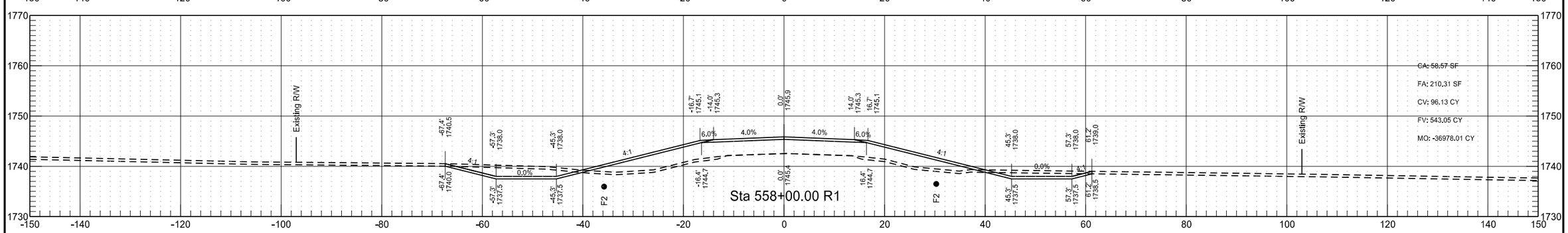

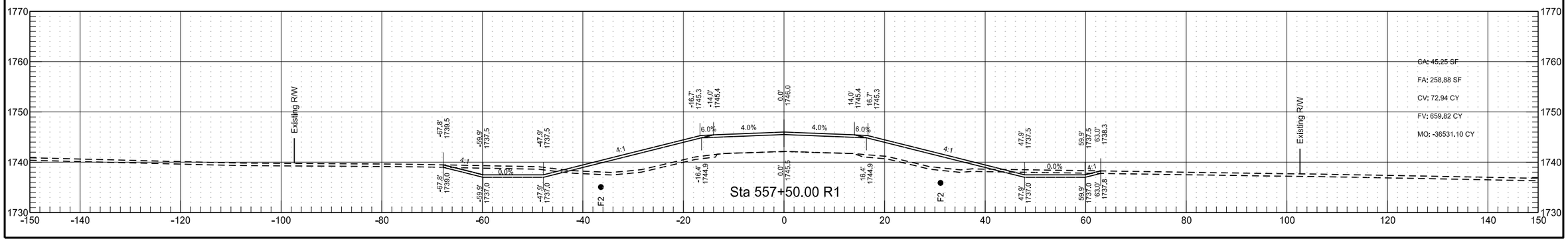

106th St NE

STATE	PROJECT NO.	SECTION NO.	SHEET NO.
ND	IM-1-094(191)166	200	12

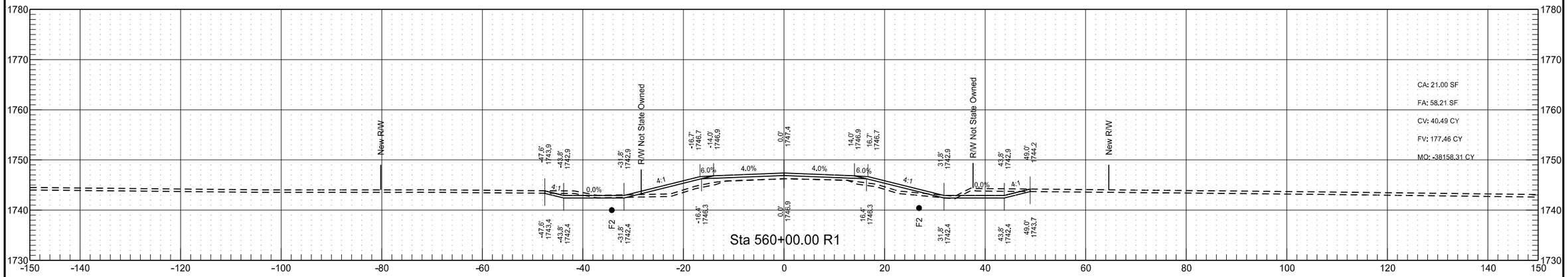

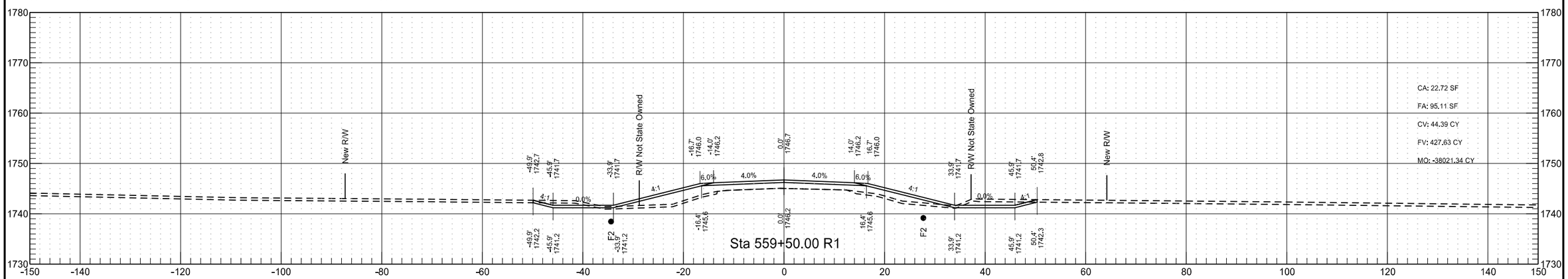

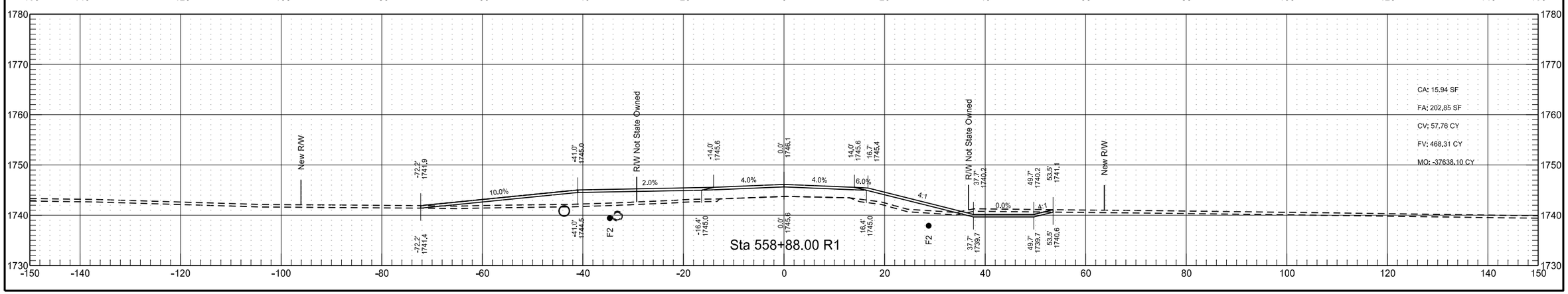

STATE	PROJECT NO.	SECTION NO.	SHEET NO.
ND	IM-1-094(191)166	200	13

106th St NE

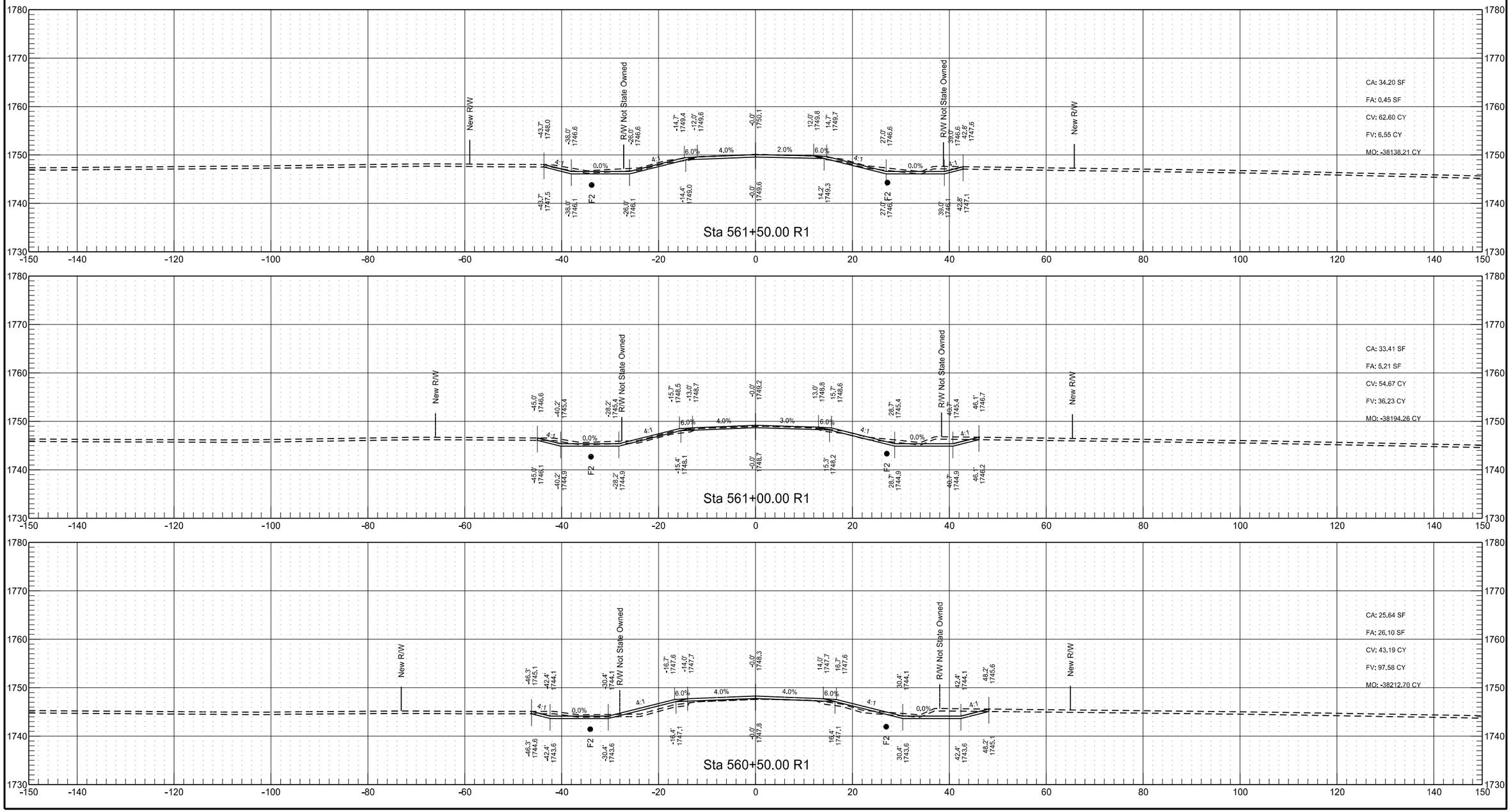

STATE	PROJECT NO.	SECTION NO.	SHEET NO.
ND	IM-1-094(191)166	200	14

30th Ave NE

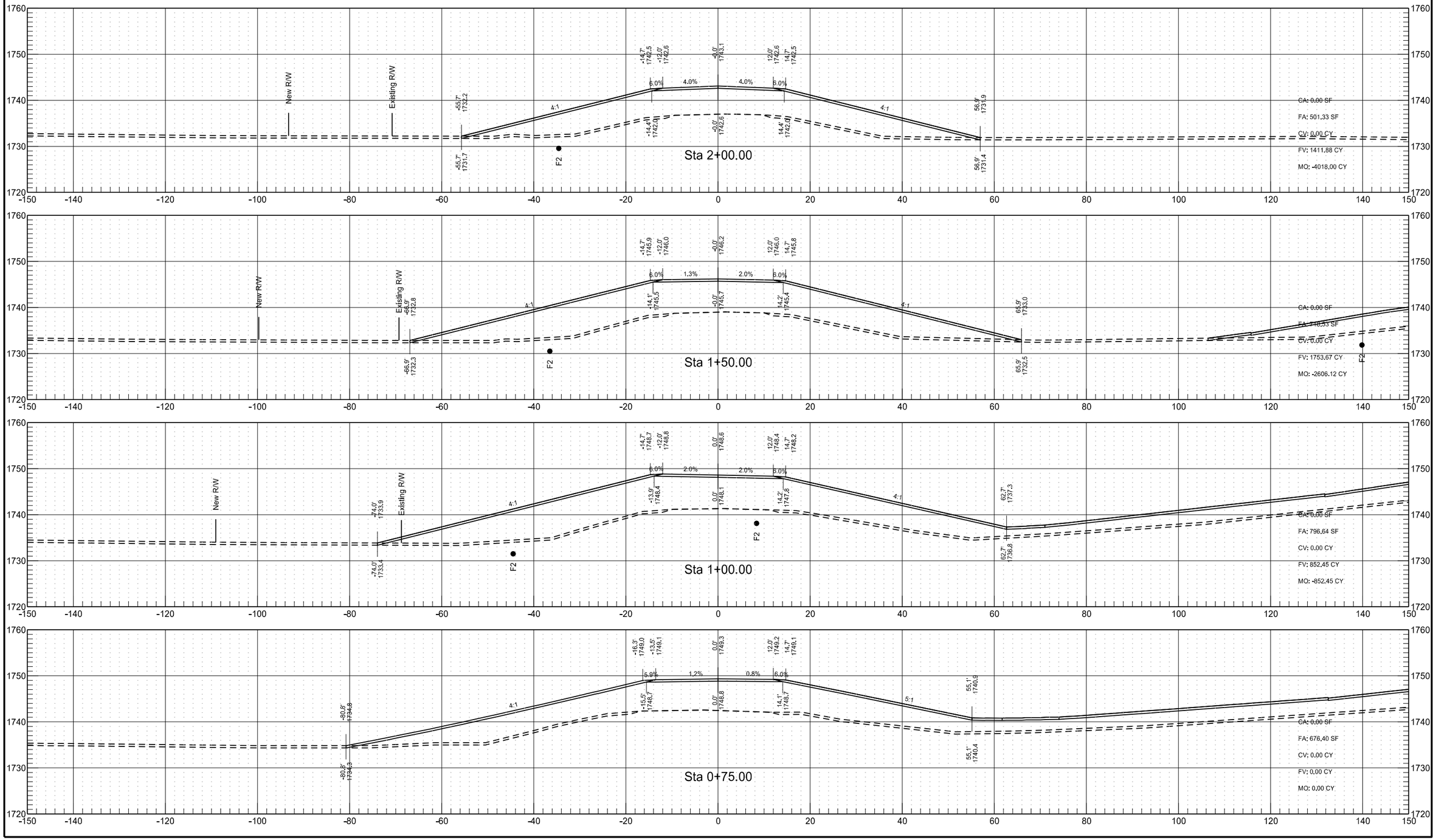

STATE	PROJECT NO.	SECTION NO.	SHEET NO.
ND	IM-1-094(191)166	200	15

30th Ave NE

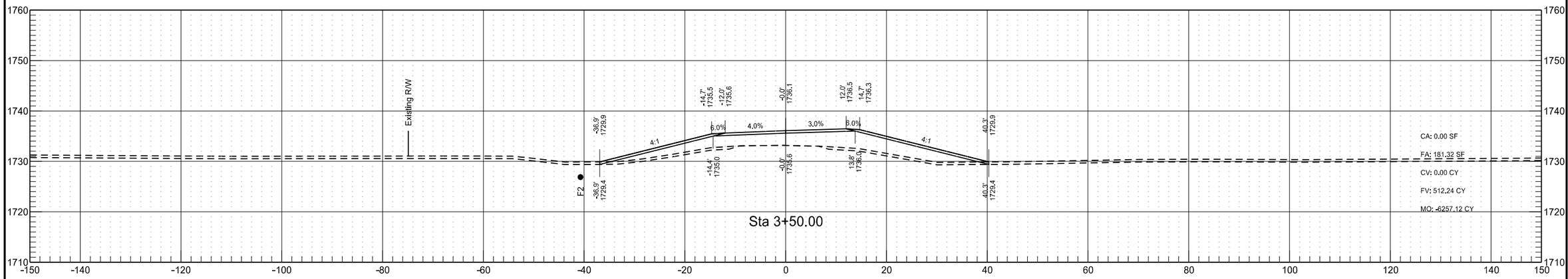

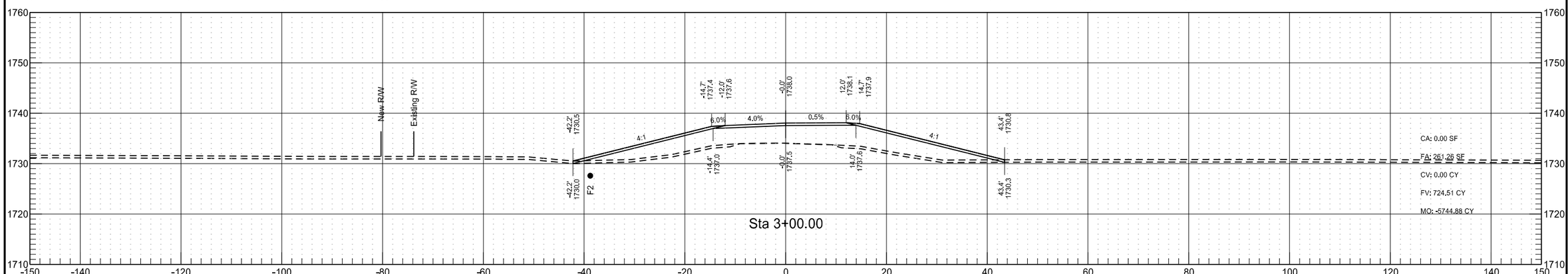

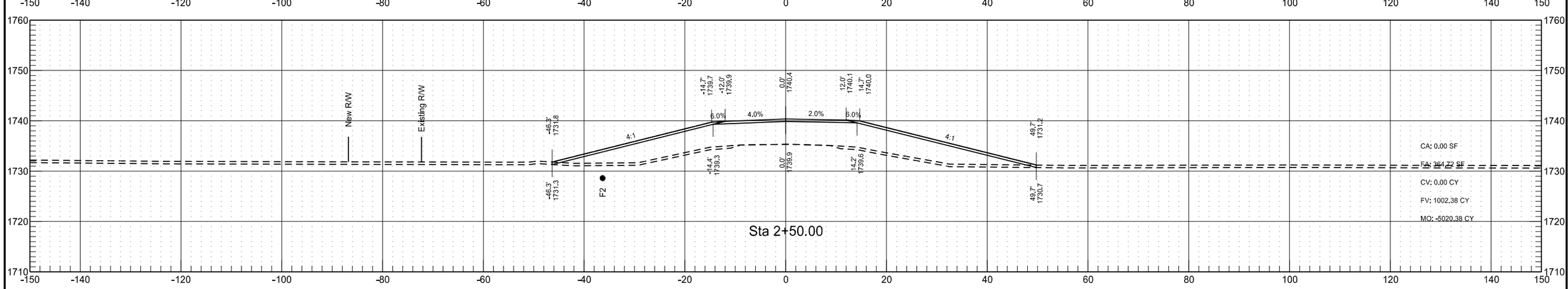

STATE	PROJECT NO.	SECTION NO.	SHEET NO.
ND	IM-1-094(191)166	200	16

30th Ave NE

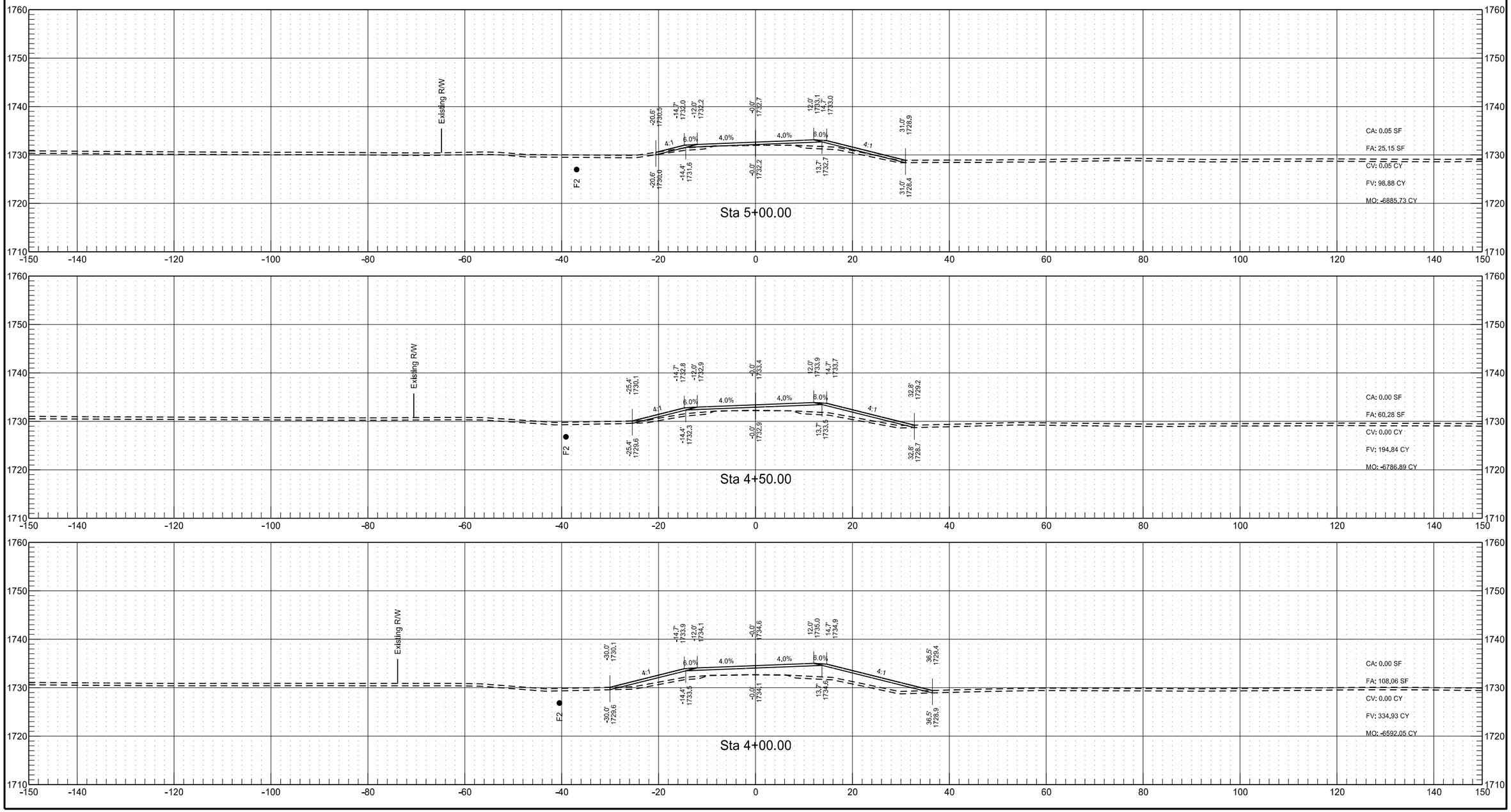

STATE	PROJECT NO.	SECTION NO.	SHEET NO.
ND	IM-1-094(191)166	200	17

30th Ave NE

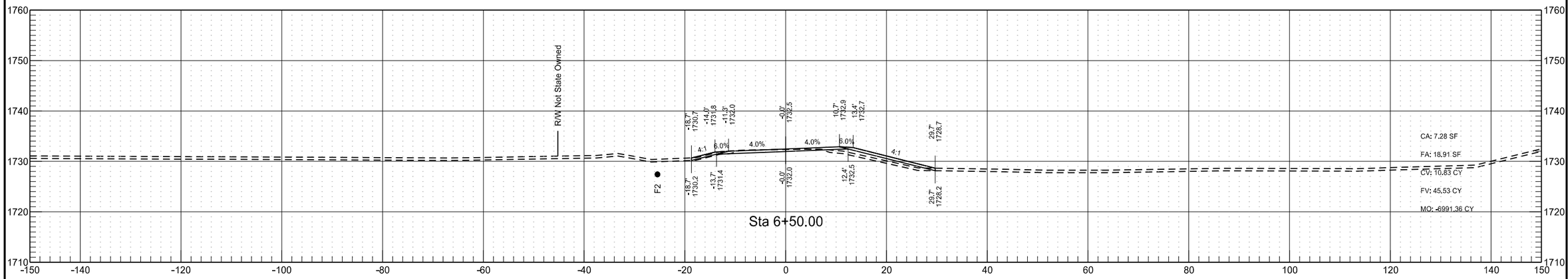

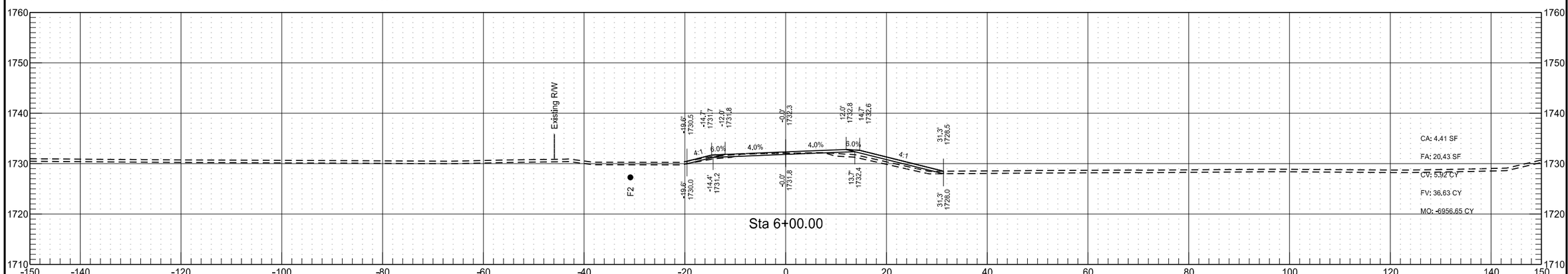

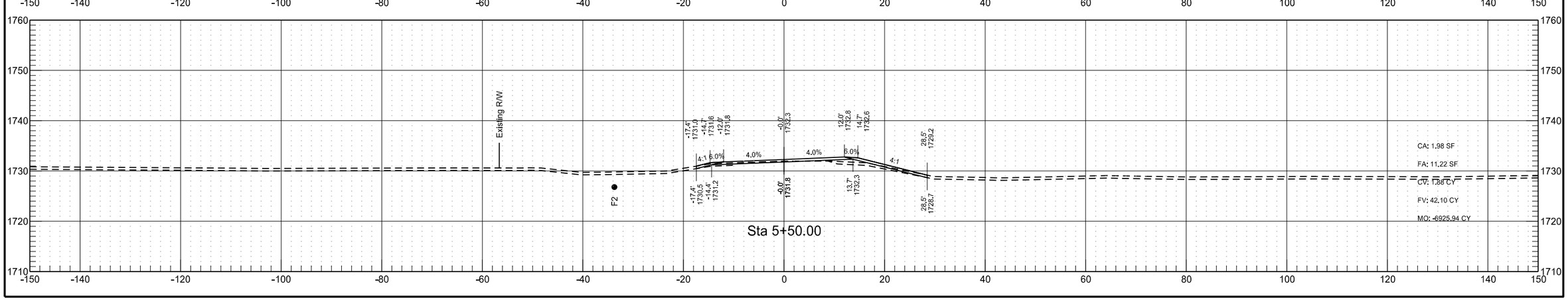

STATE	PROJECT NO.	SECTION NO.	SHEET NO.
ND	IM-1-094(191)166	200	18

30th Ave NE

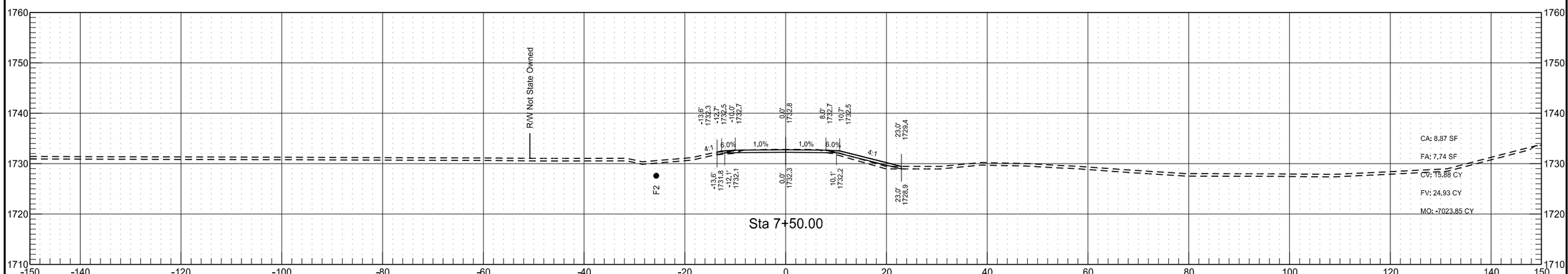

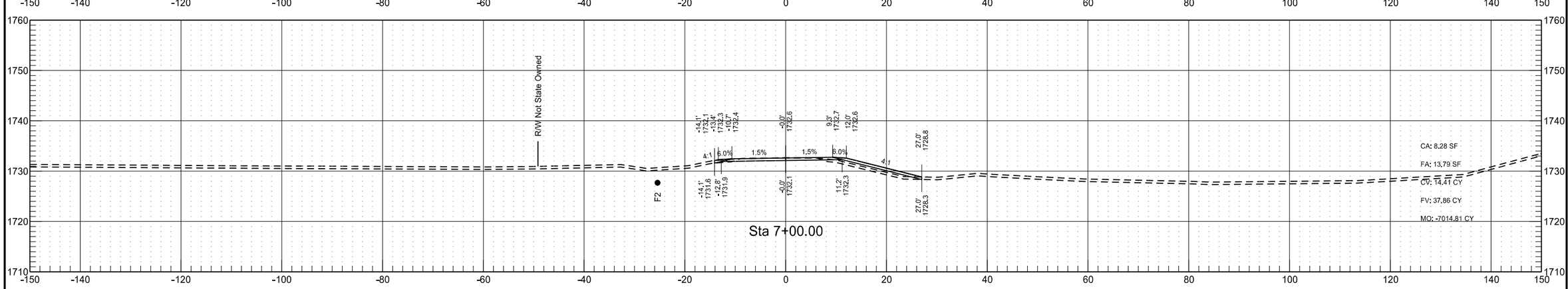

West Median Crossover

STATE	PROJECT NO.	SECTION NO.	SHEET NO.
ND	IM-1-094(191)166	200	19

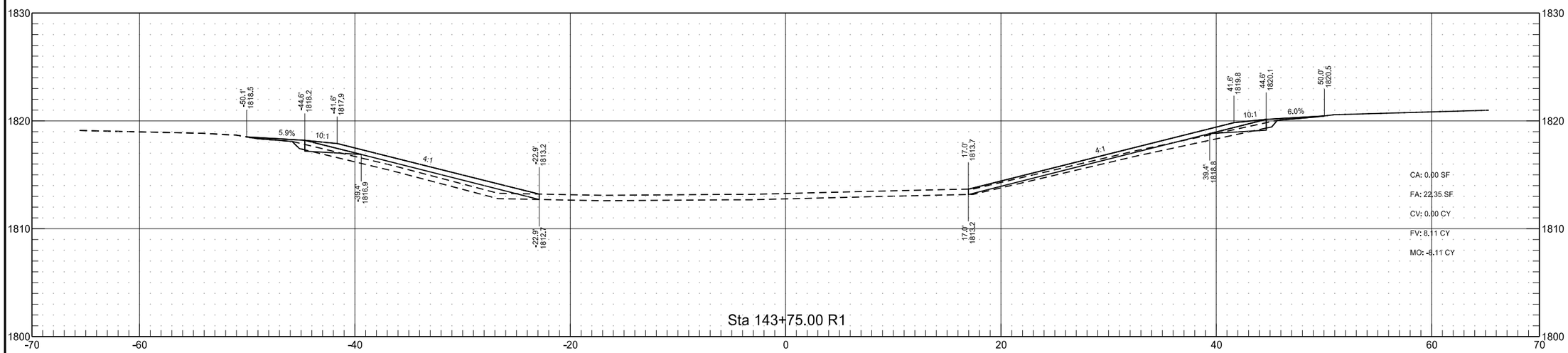

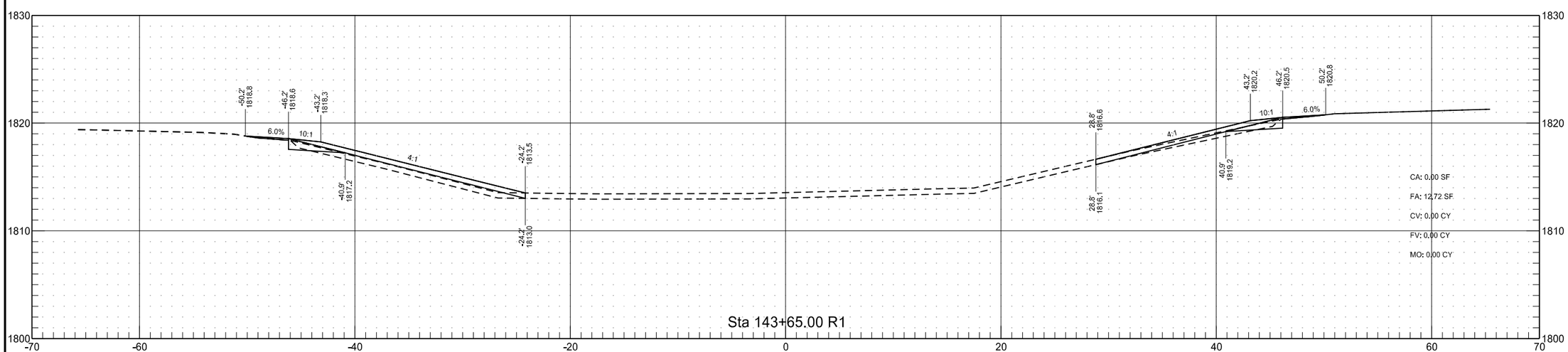

STATE	PROJECT NO.	SECTION NO.	SHEET NO.
ND	IM-1-094(191)166	200	20

West Median Crossover

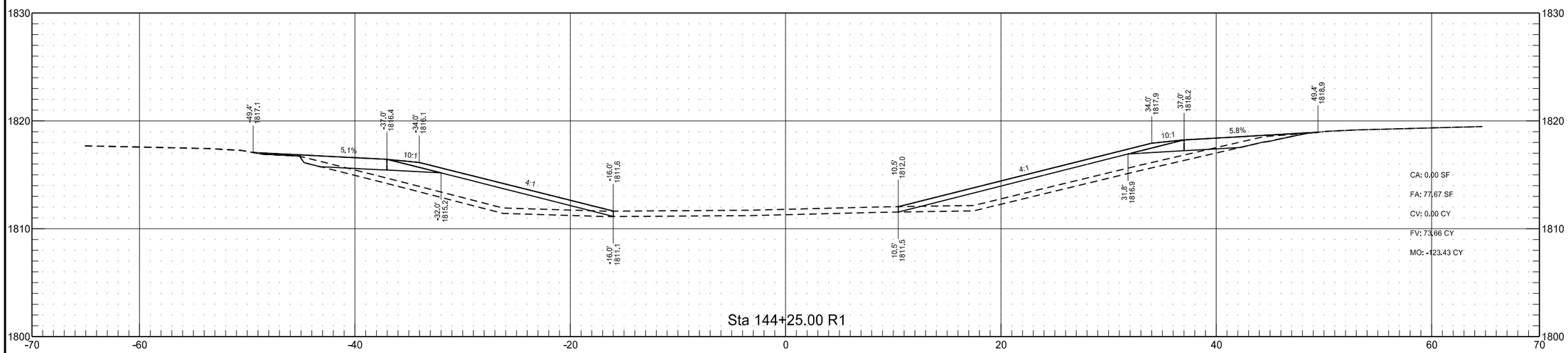

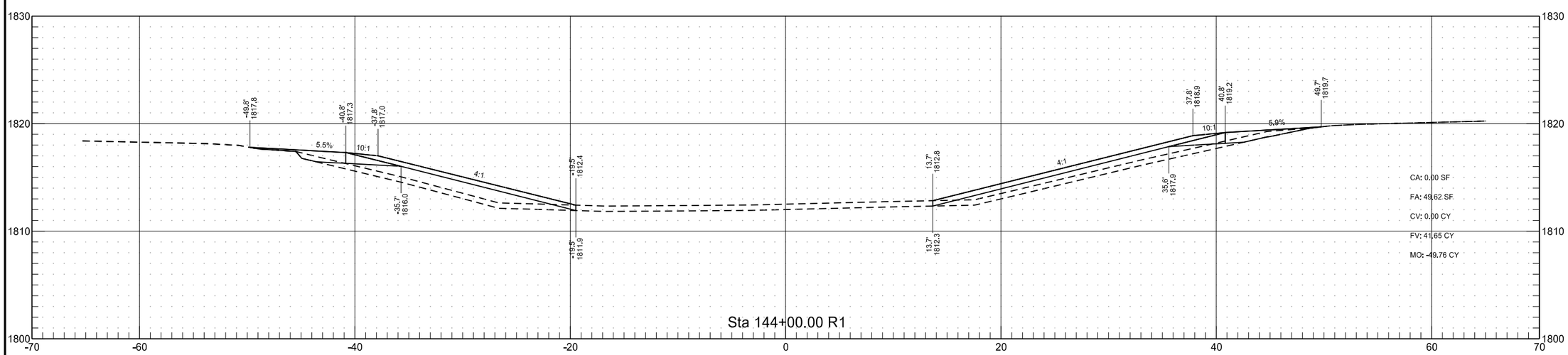

STATE	PROJECT NO.	SECTION NO.	SHEET NO.
ND	IM-1-094(191)166	200	21

West Median Crossover

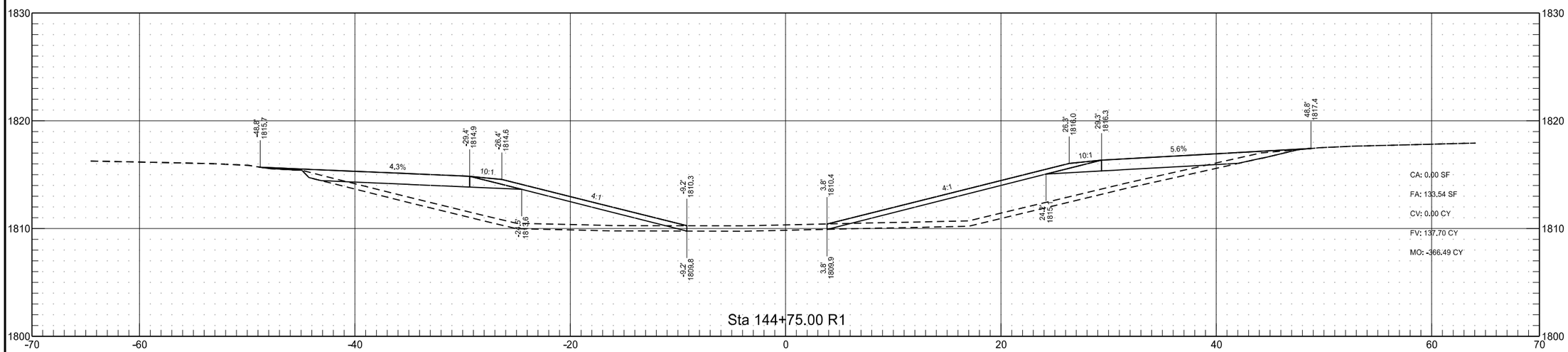

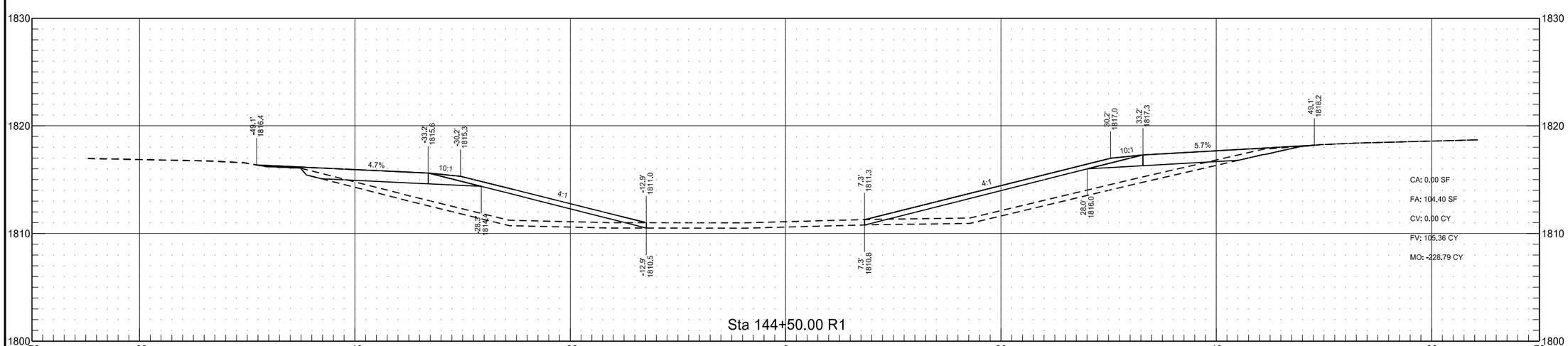

STATE	PROJECT NO.	SECTION NO.	SHEET NO.
ND	IM-1-094(191)166	200	22

West Median Crossover

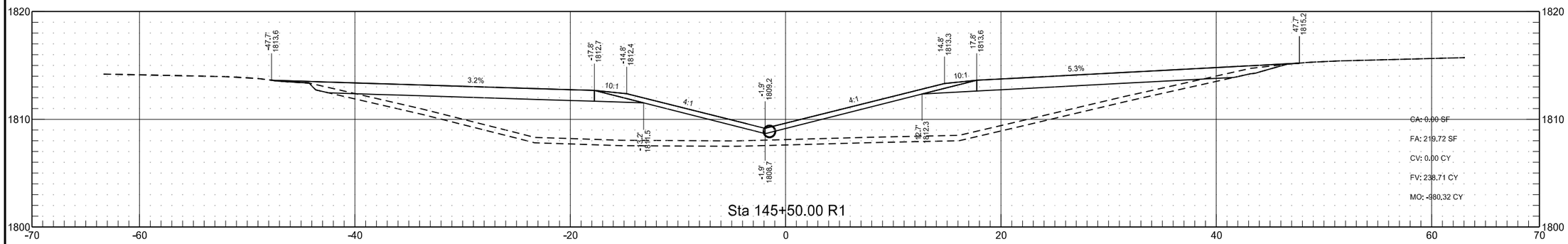

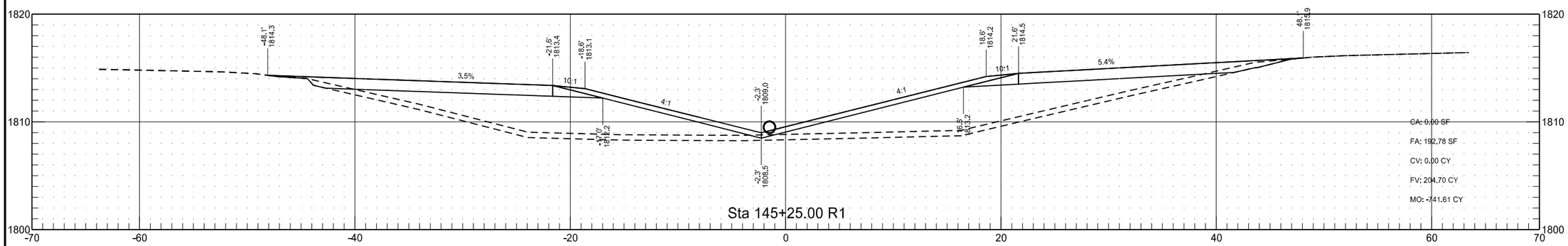

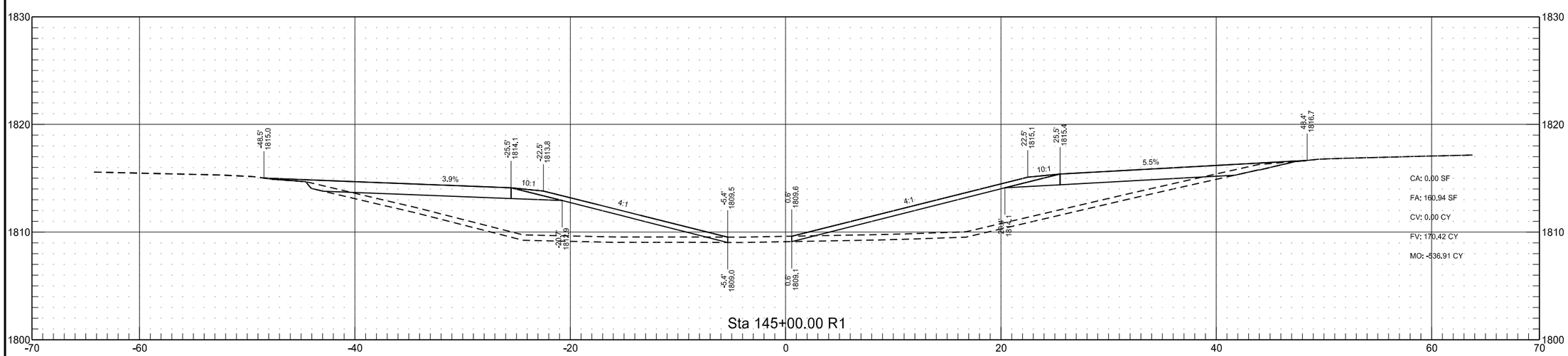

STATE	PROJECT NO.	SECTION NO.	SHEET NO.
ND	IM-1-094(191)166	200	23

West Median Crossover

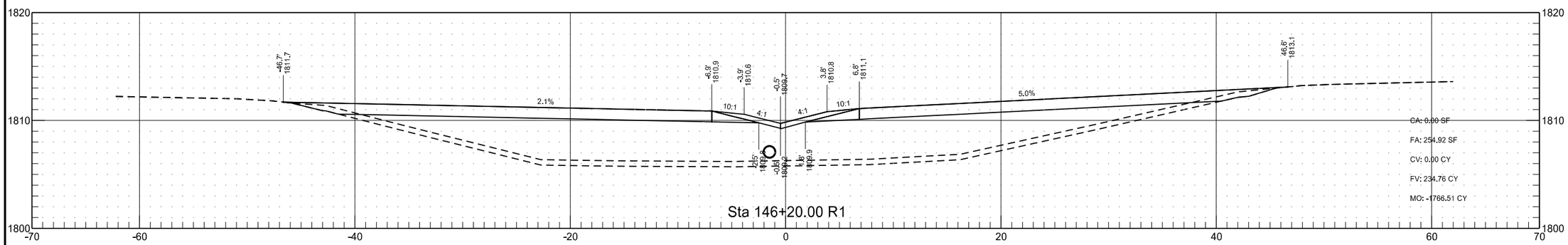

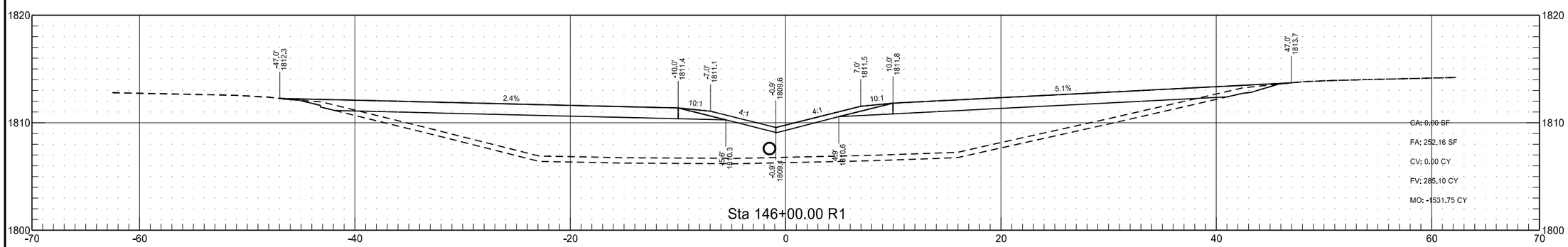

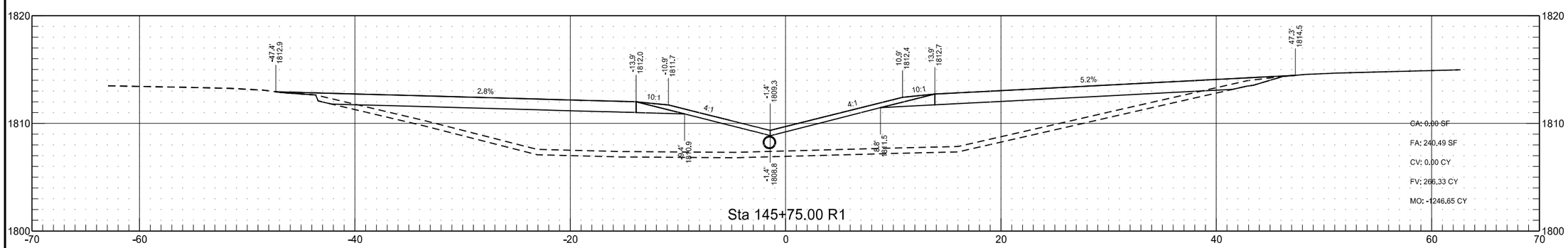

STATE	PROJECT NO.	SECTION NO.	SHEET NO.
ND	IM-1-094(191)166	200	24

West Median Crossover

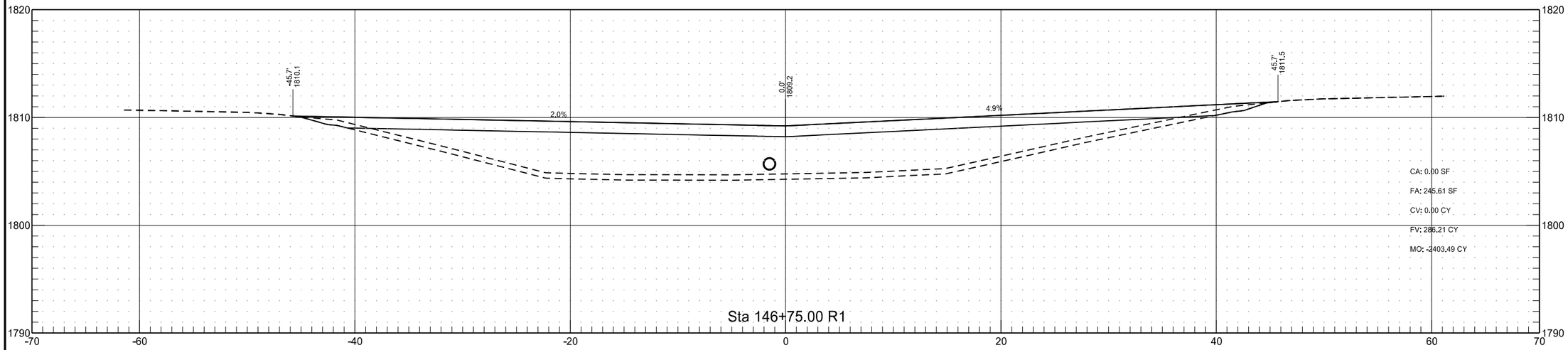

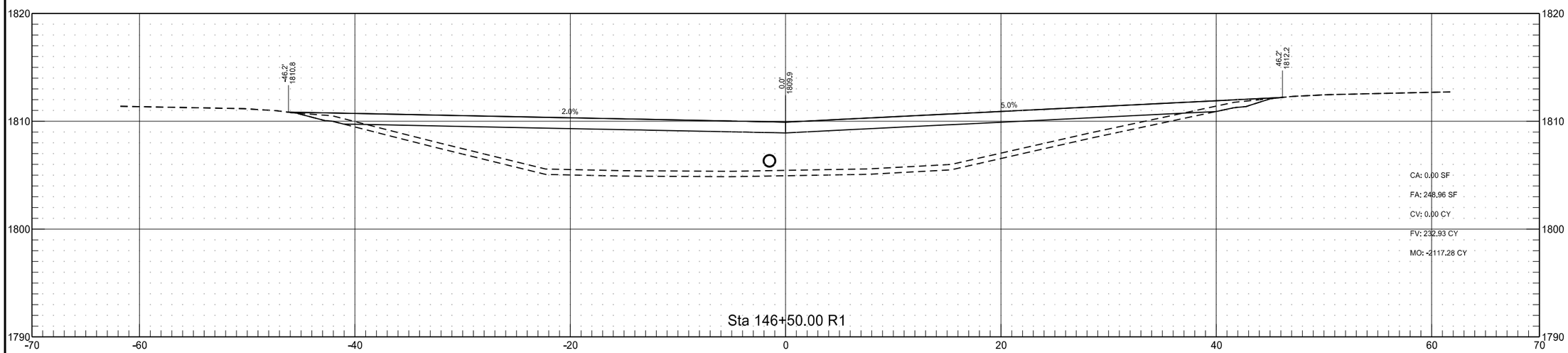

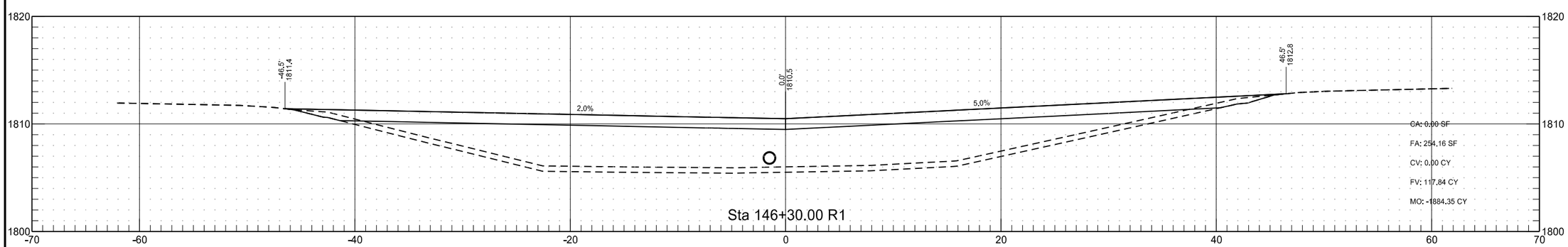

West Median Crossover

STATE	PROJECT NO.	SECTION NO.	SHEET NO.
ND	IM-1-094(191)166	200	25

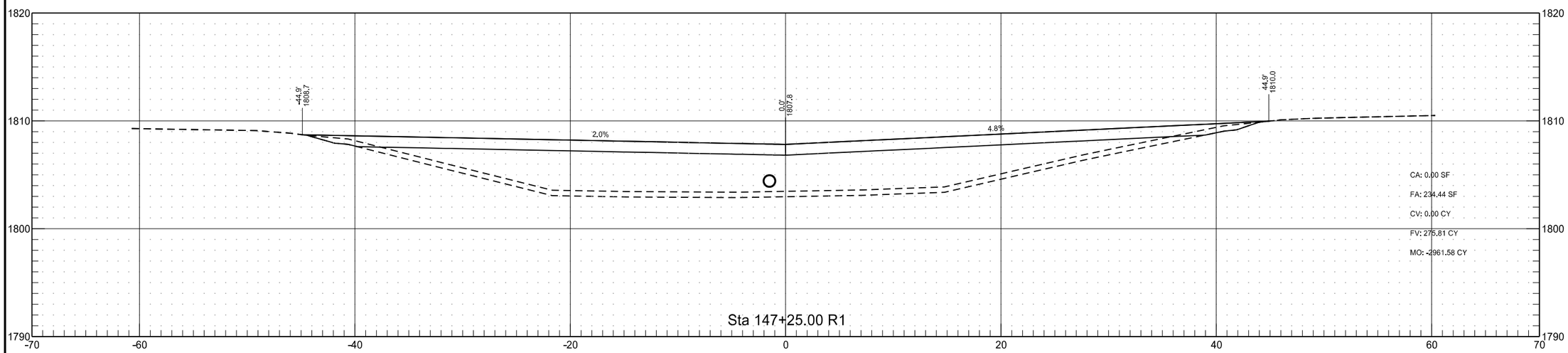

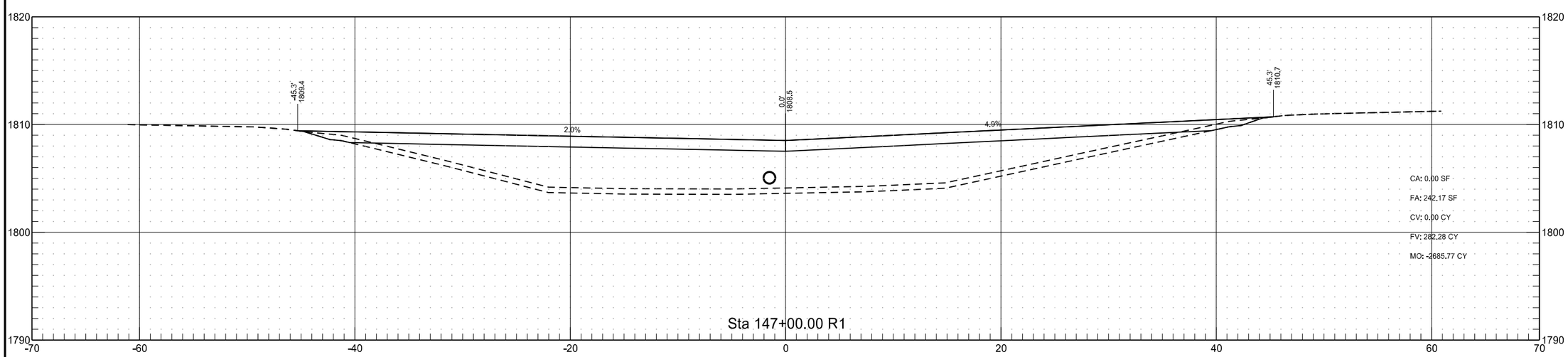

West Median Crossover

STATE	PROJECT NO.	SECTION NO.	SHEET NO.
ND	IM-1-094(191)166	200	26

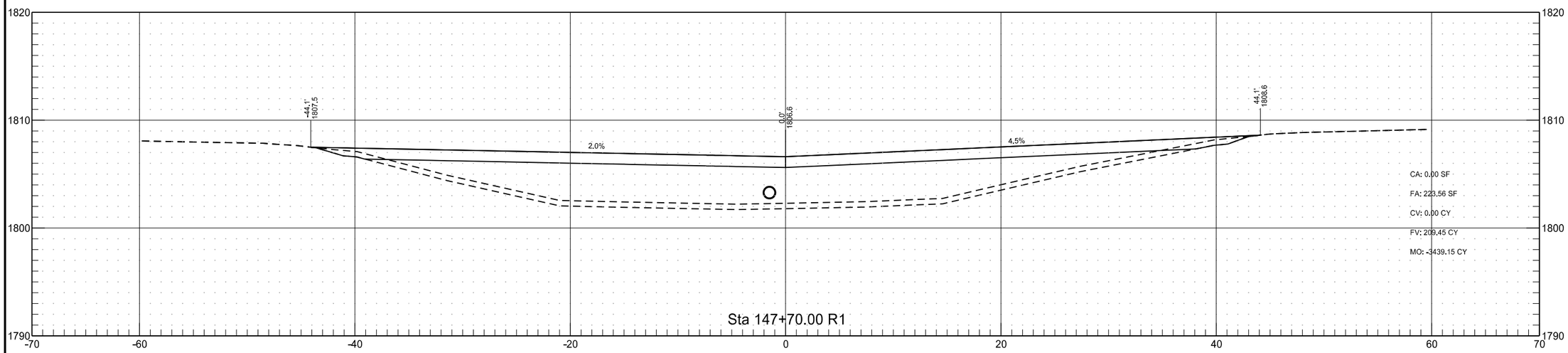

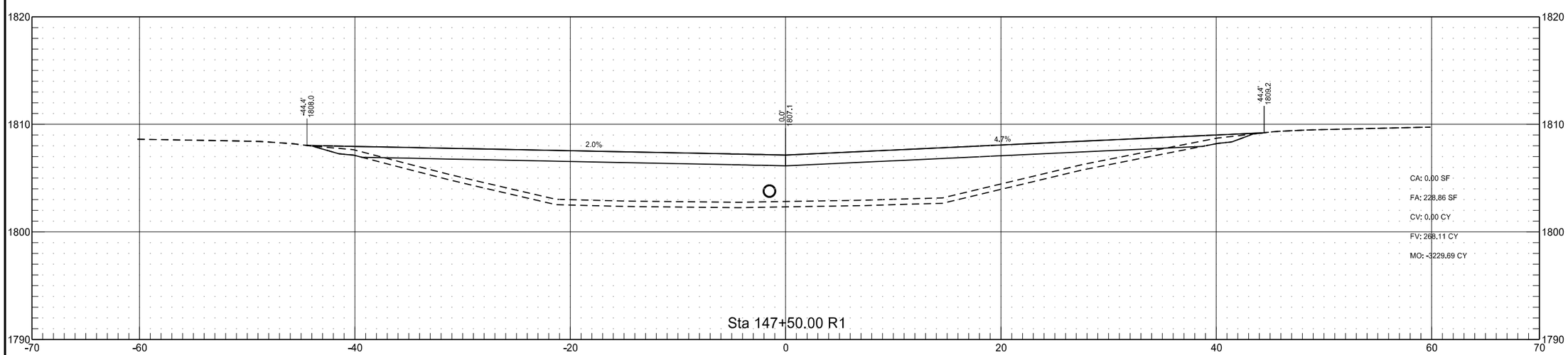

STATE	PROJECT NO.	SECTION NO.	SHEET NO.
ND	IM-1-094(191)166	200	27

West Median Crossover

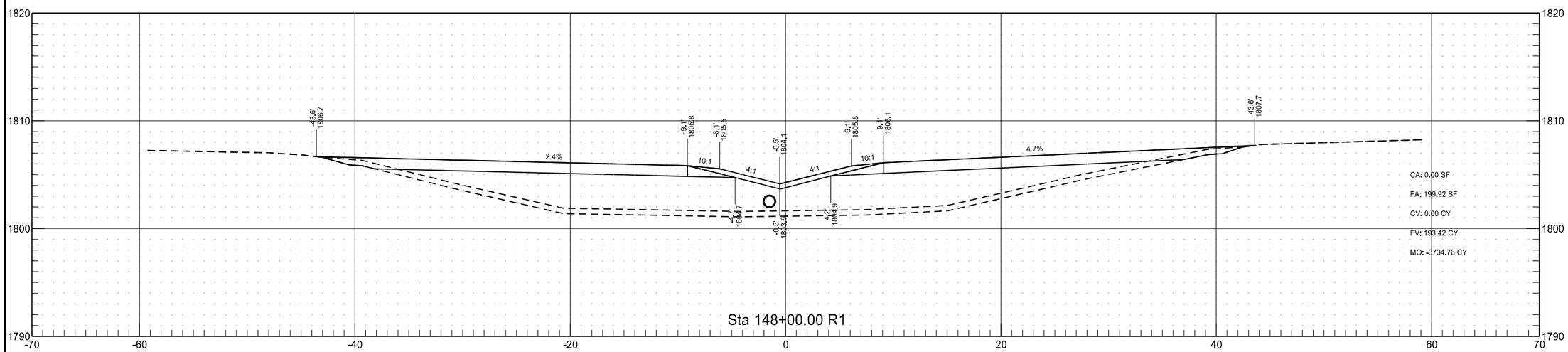

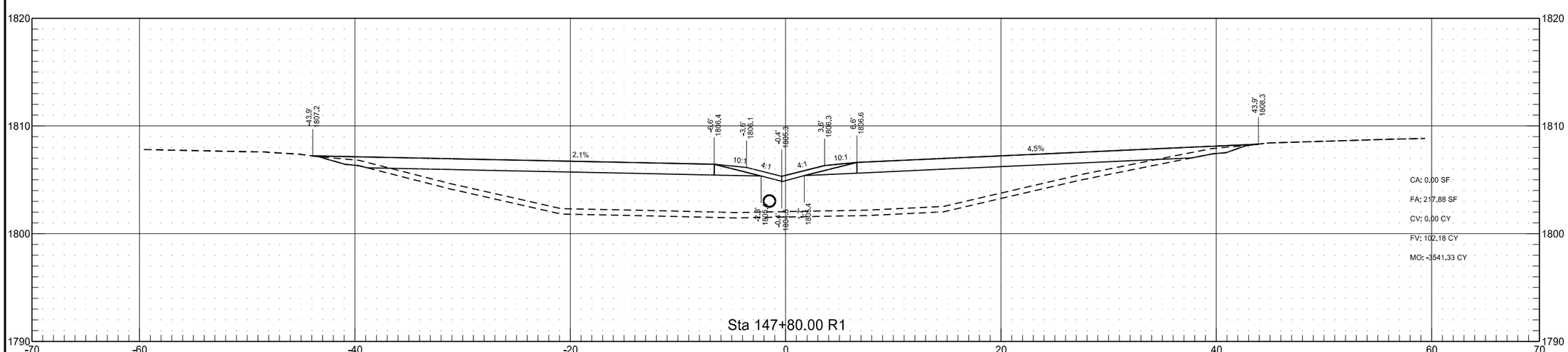

STATE	PROJECT NO.	SECTION NO.	SHEET NO.
ND	IM-1-094(191)166	200	28

West Median Crossover

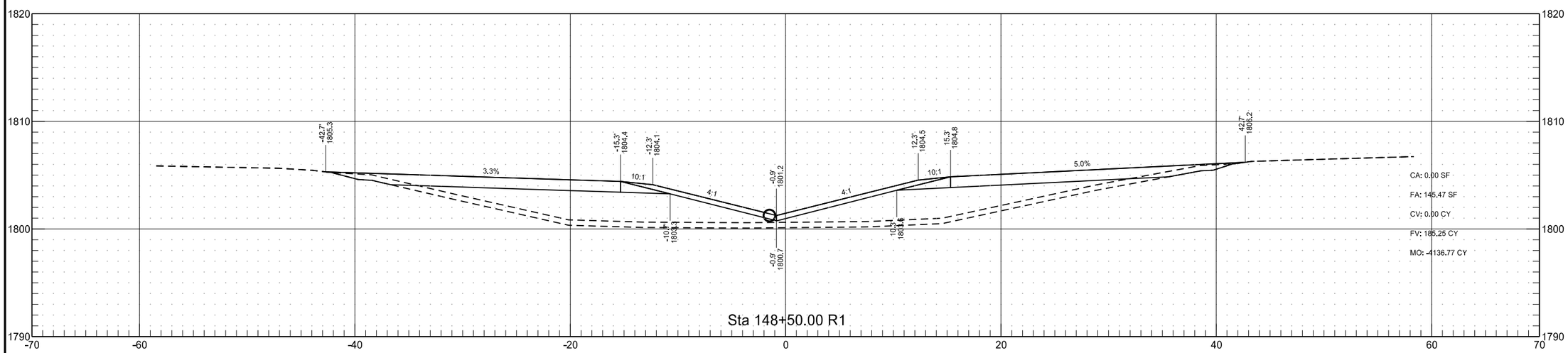

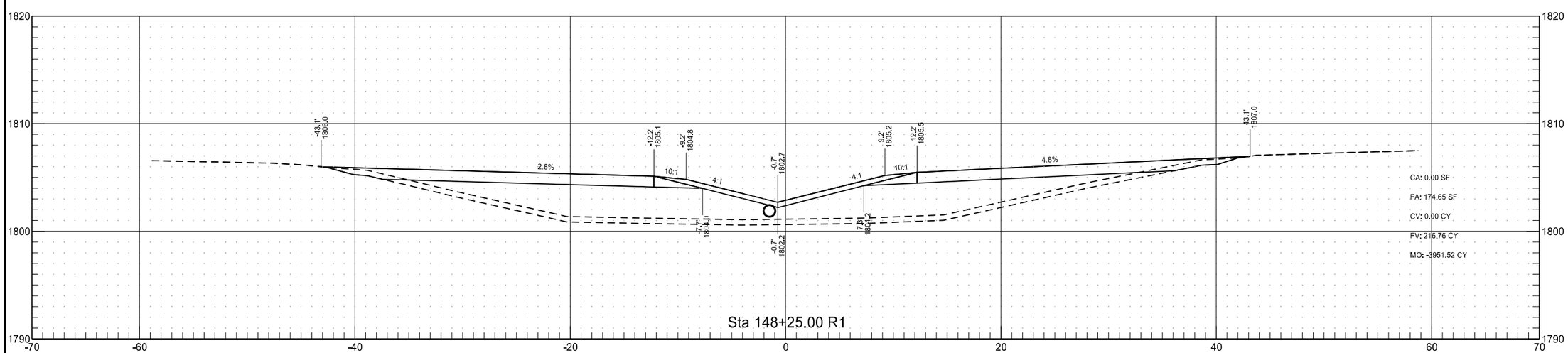

STATE	PROJECT NO.	SECTION NO.	SHEET NO.
ND	IM-1-094(191)166	200	29

West Median Crossover

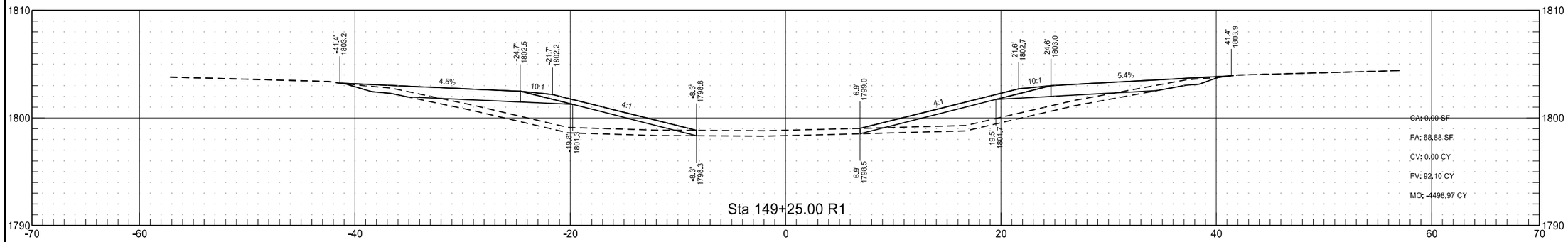

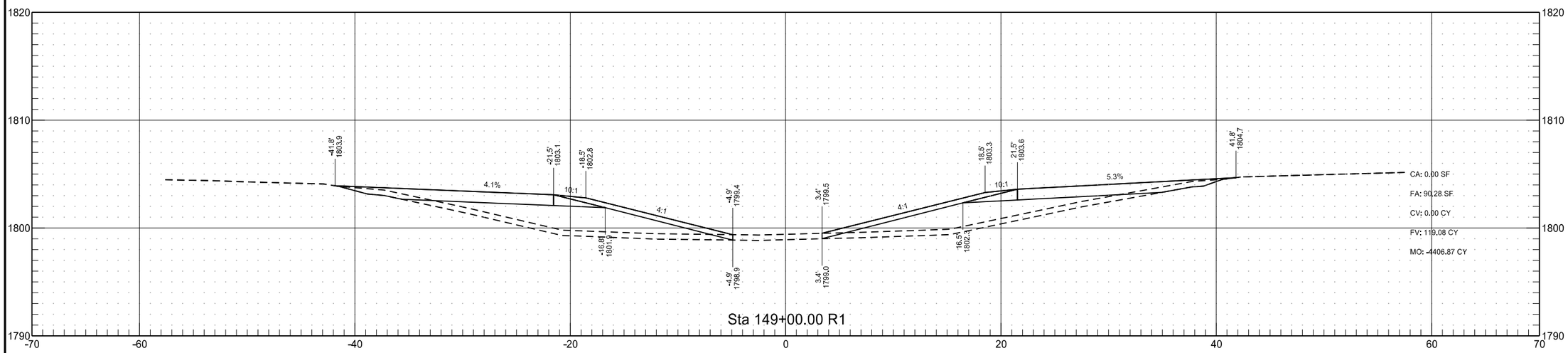

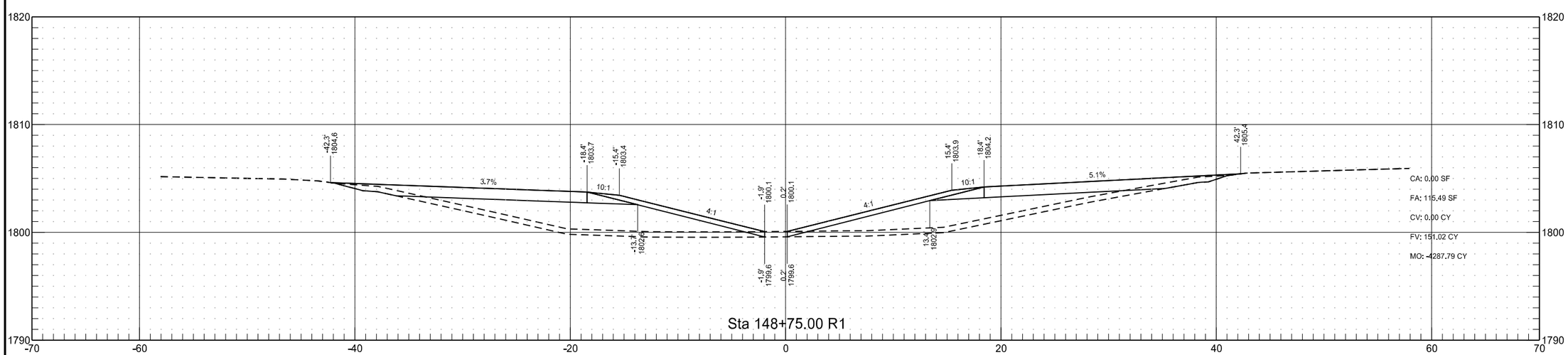

West Median Crossover

STATE	PROJECT NO.	SECTION NO.	SHEET NO.
ND	IM-1-094(191)166	200	30

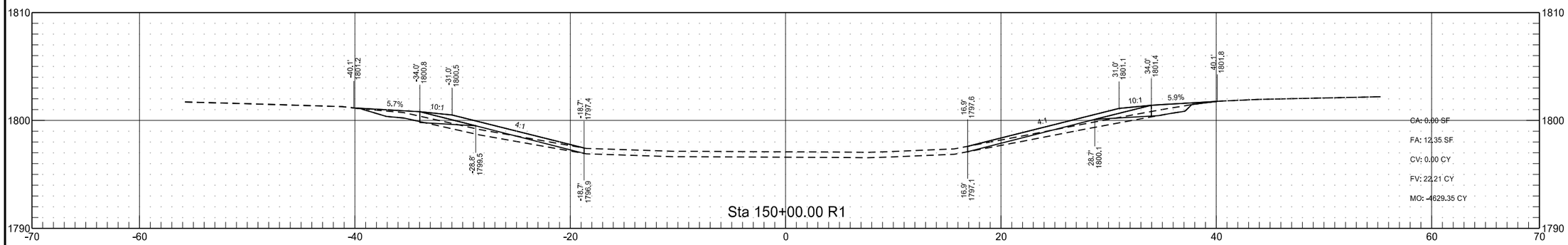

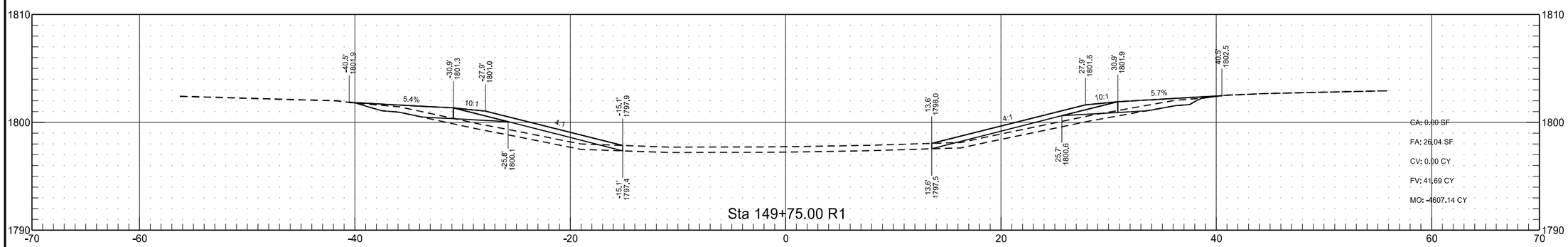

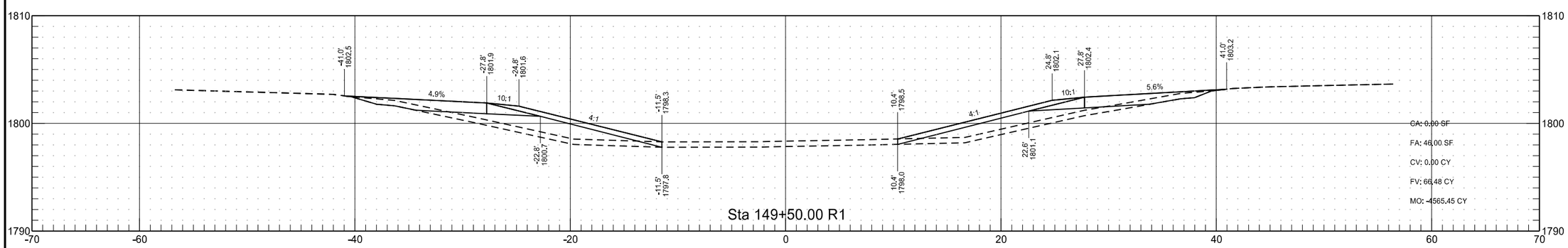

West Median Crossover

STATE	PROJECT NO.	SECTION NO.	SHEET NO.
ND	IM-1-094(191)166	200	31

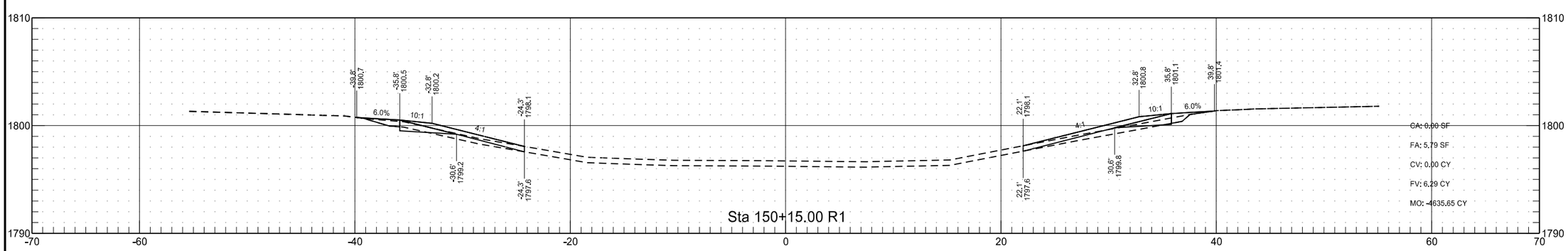

STATE	PROJECT NO.	SECTION NO.	SHEET NO.
ND	IM-1-094(191)166	200	32

East Median Crossover

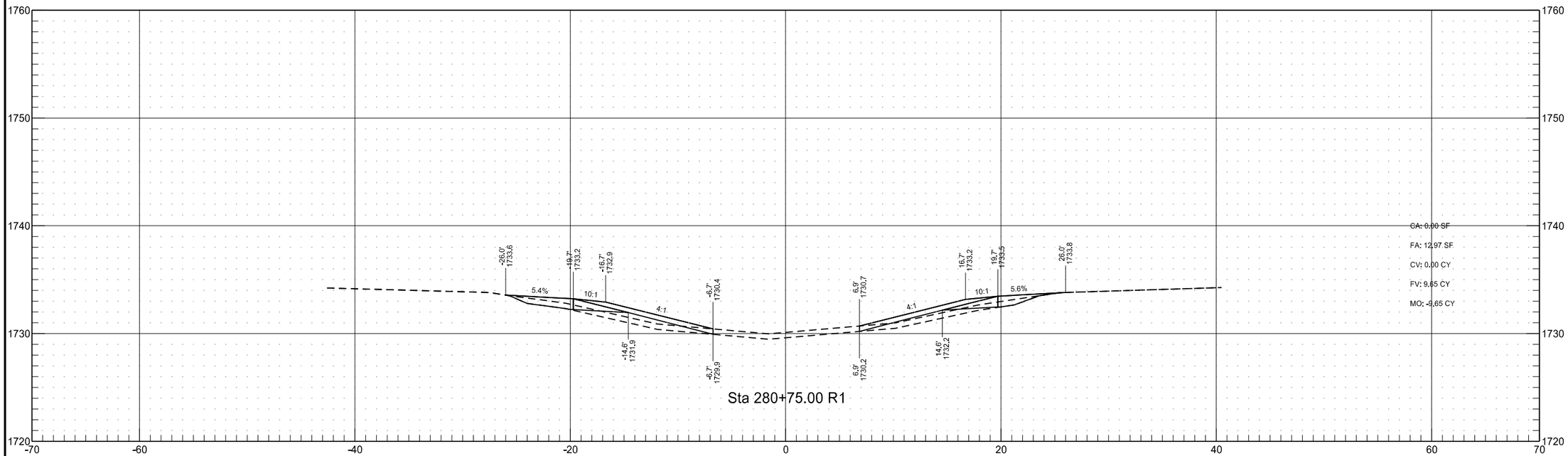

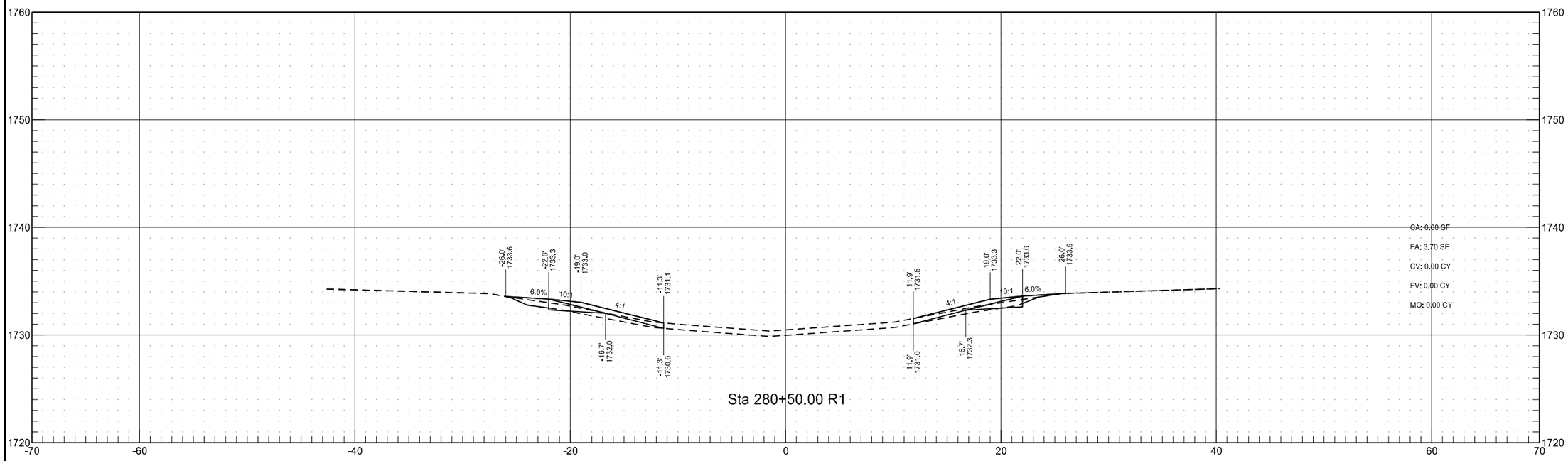

STATE	PROJECT NO.	SECTION NO.	SHEET NO.
ND	IM-1-094(191)166	200	33

East Median Crossover

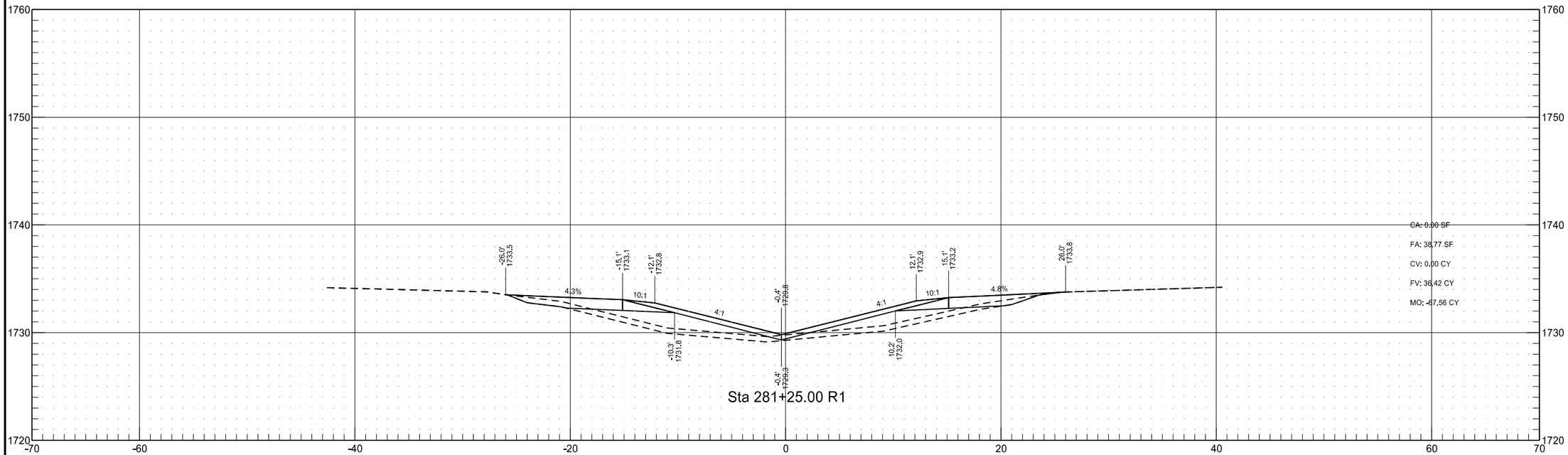

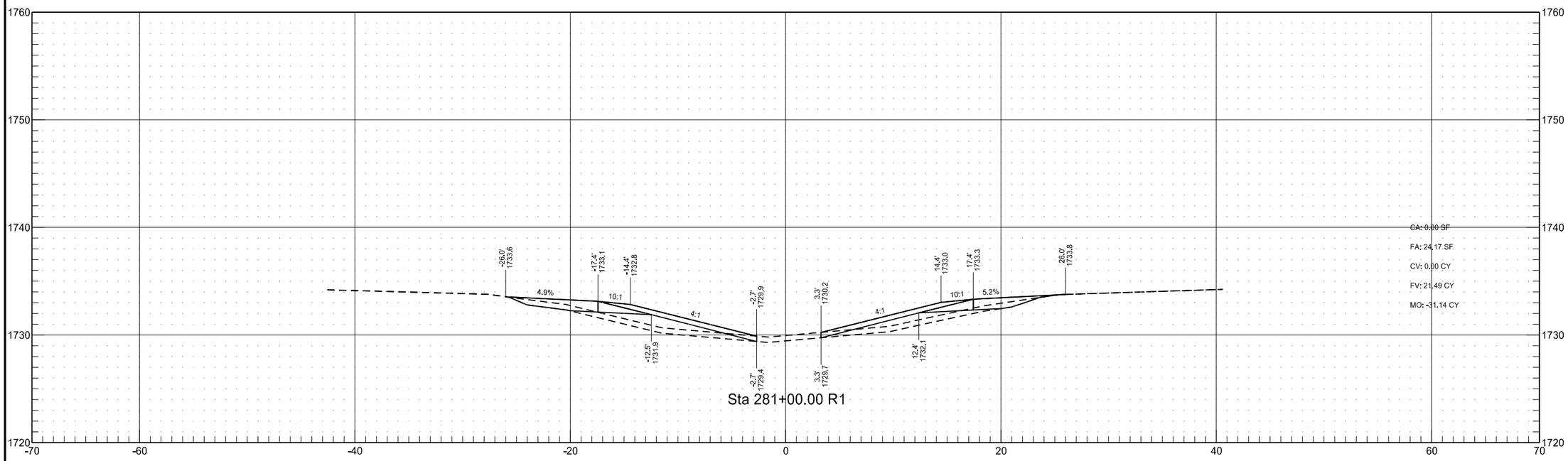

STATE	PROJECT NO.	SECTION NO.	SHEET NO.
ND	IM-1-094(191)166	200	34

East Median Crossover

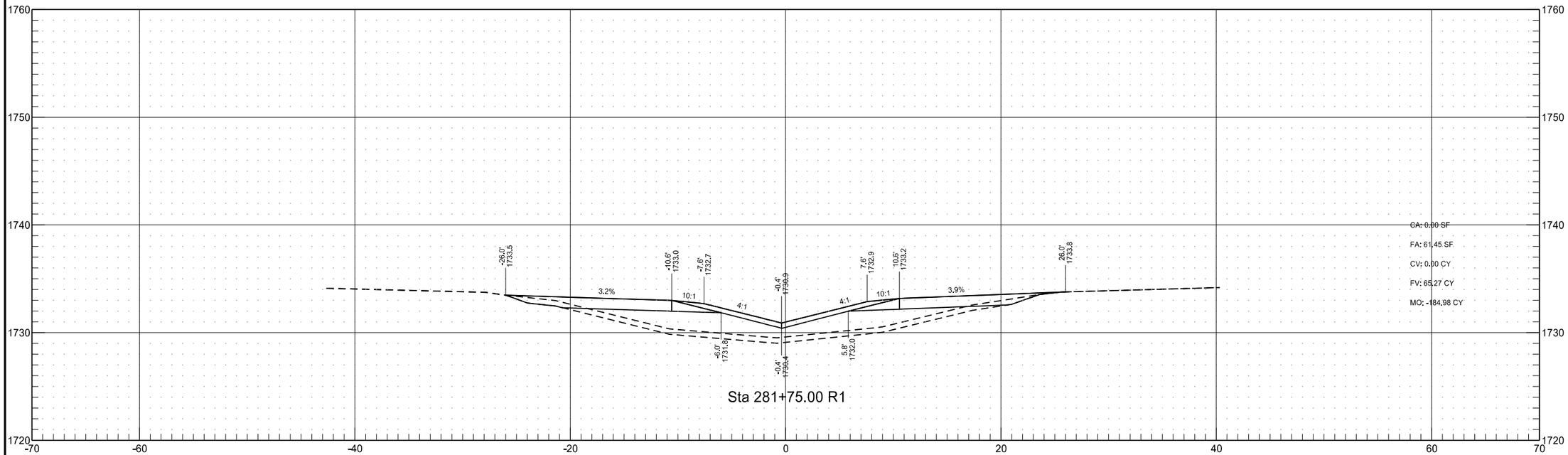

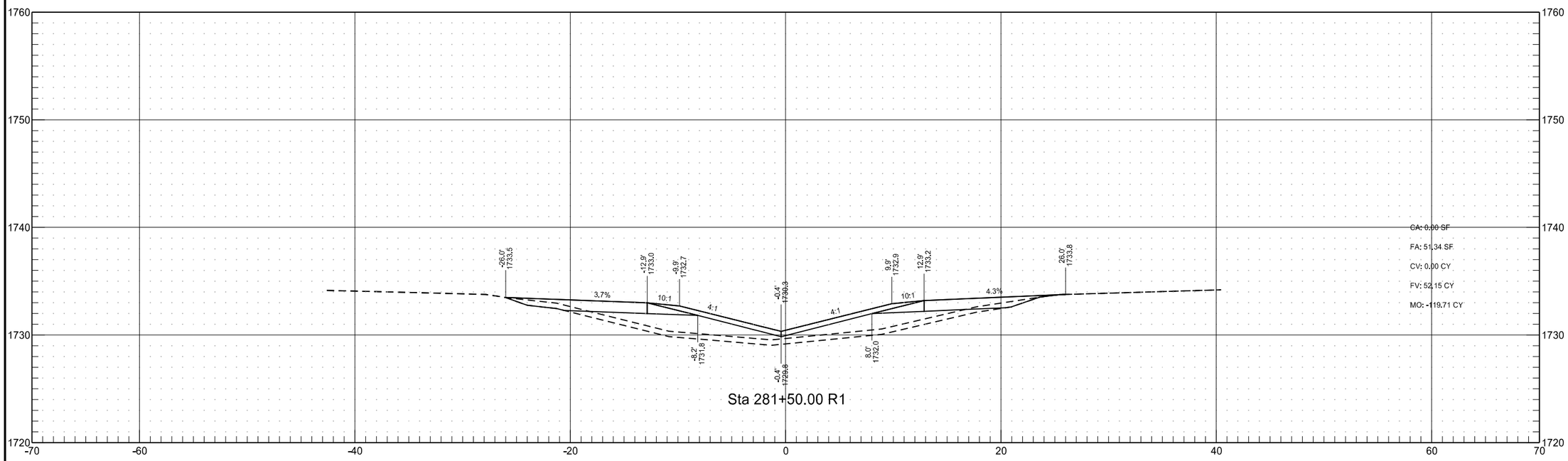

STATE	PROJECT NO.	SECTION NO.	SHEET NO.
ND	IM-1-094(191)166	200	35

East Median Crossover

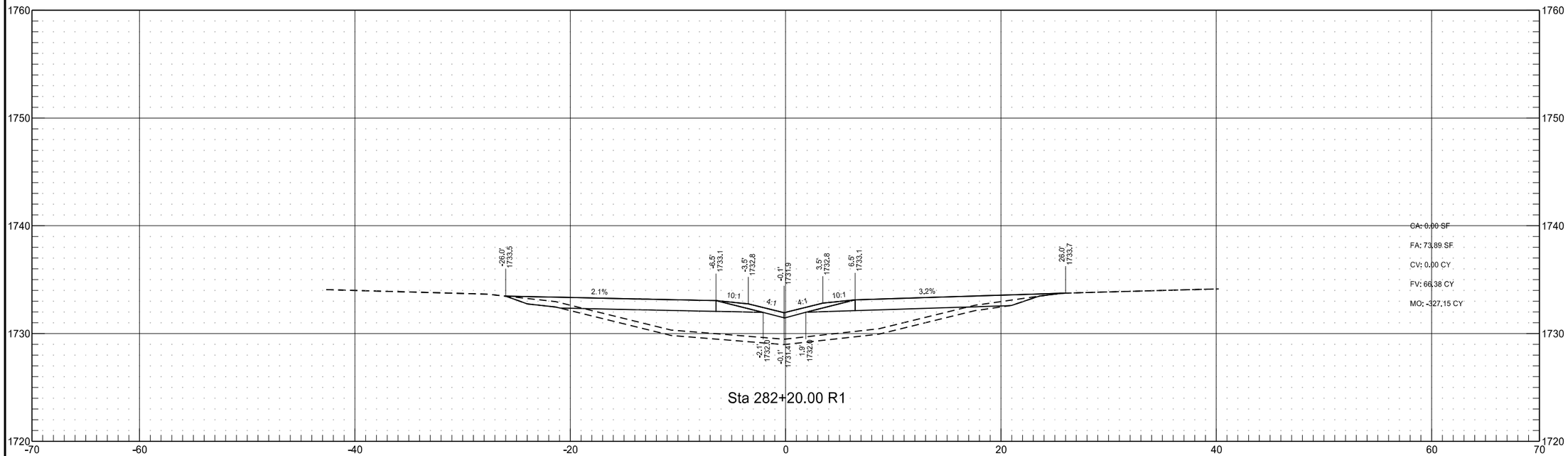

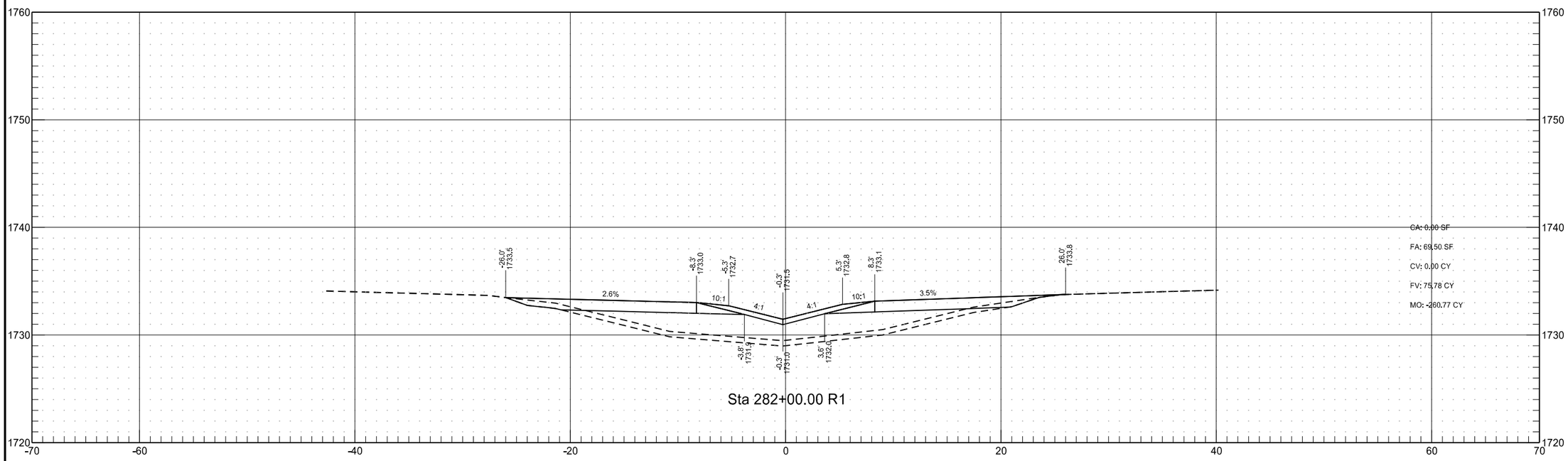

STATE	PROJECT NO.	SECTION NO.	SHEET NO.
ND	IM-1-094(191)166	200	36

East Median Crossover

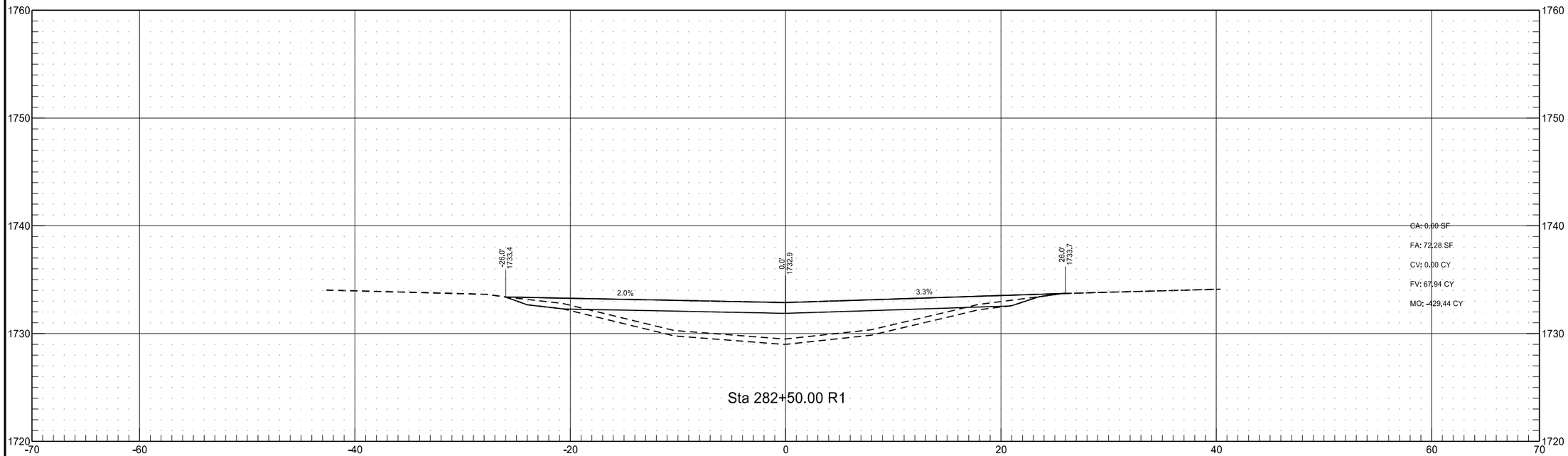

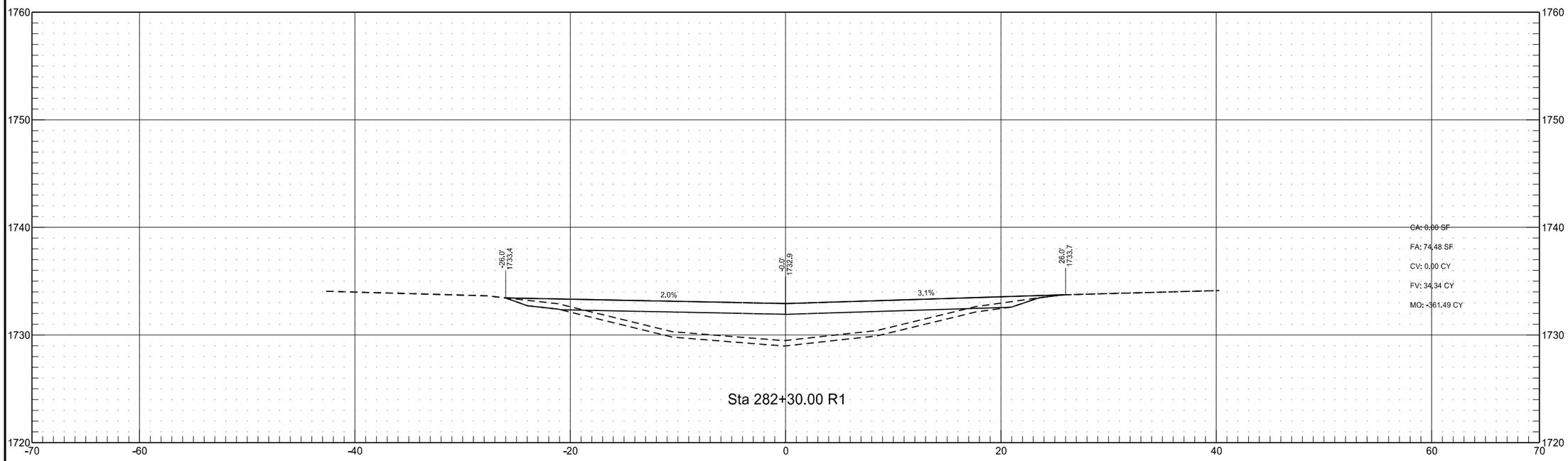

STATE	PROJECT NO.	SECTION NO.	SHEET NO.
ND	IM-1-094(191)166	200	37

East Median Crossover

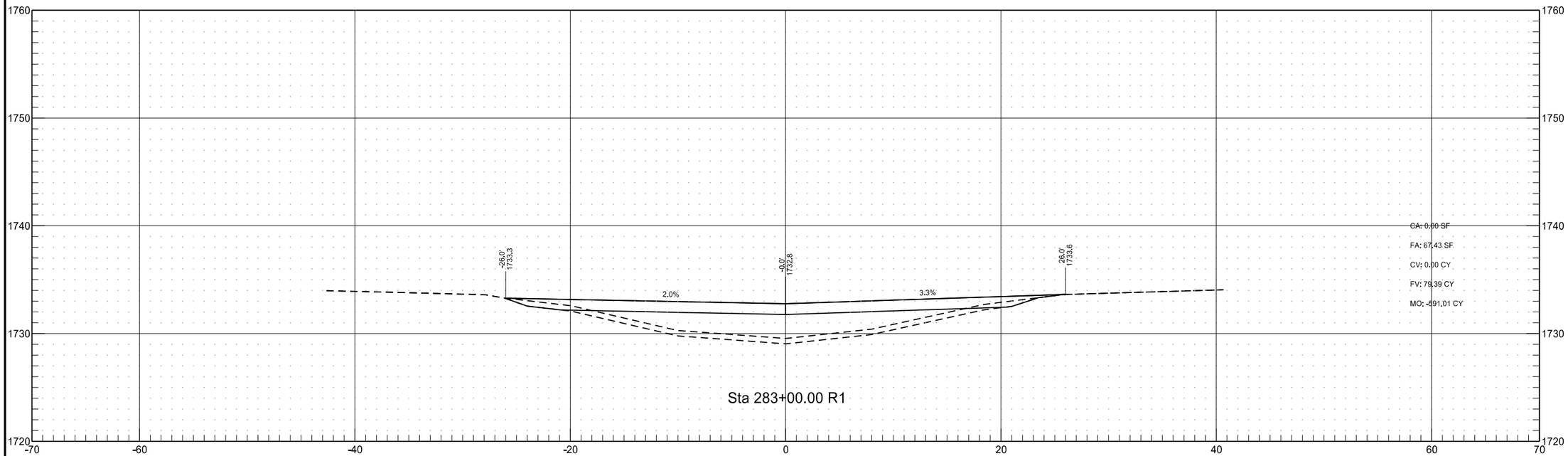

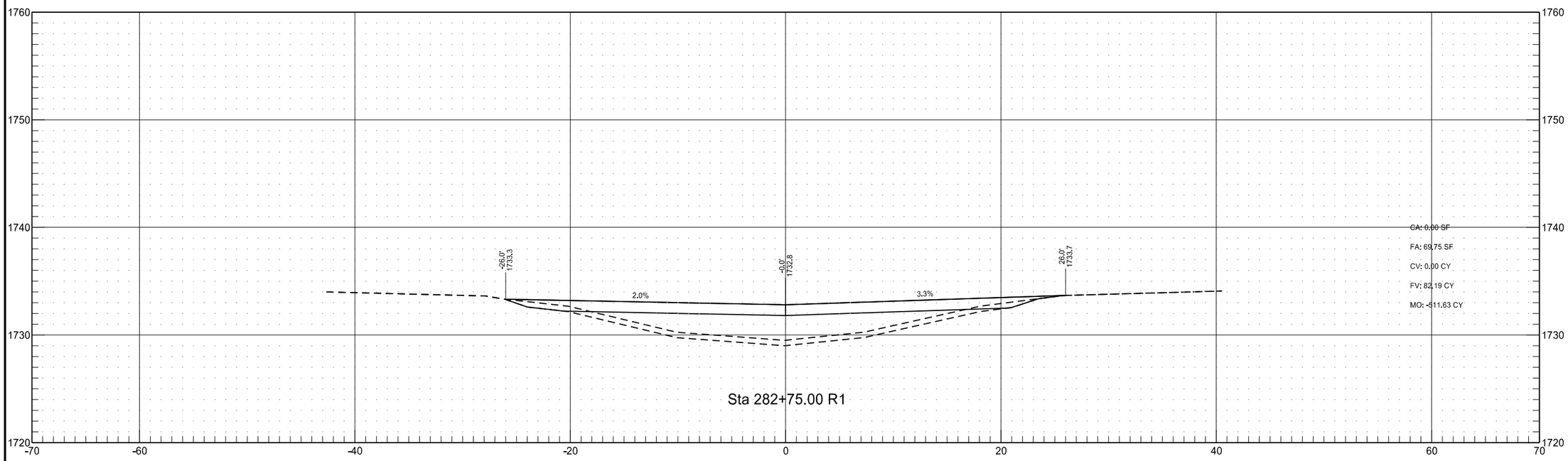

STATE	PROJECT NO.	SECTION NO.	SHEET NO.
ND	IM-1-094(191)166	200	38

East Median Crossover

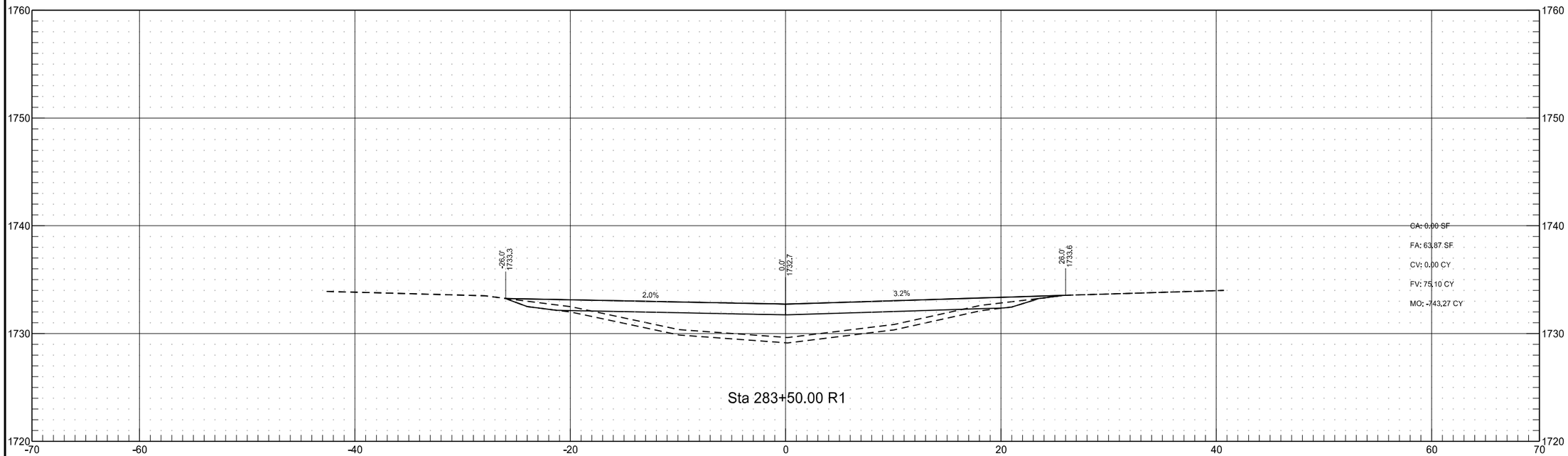

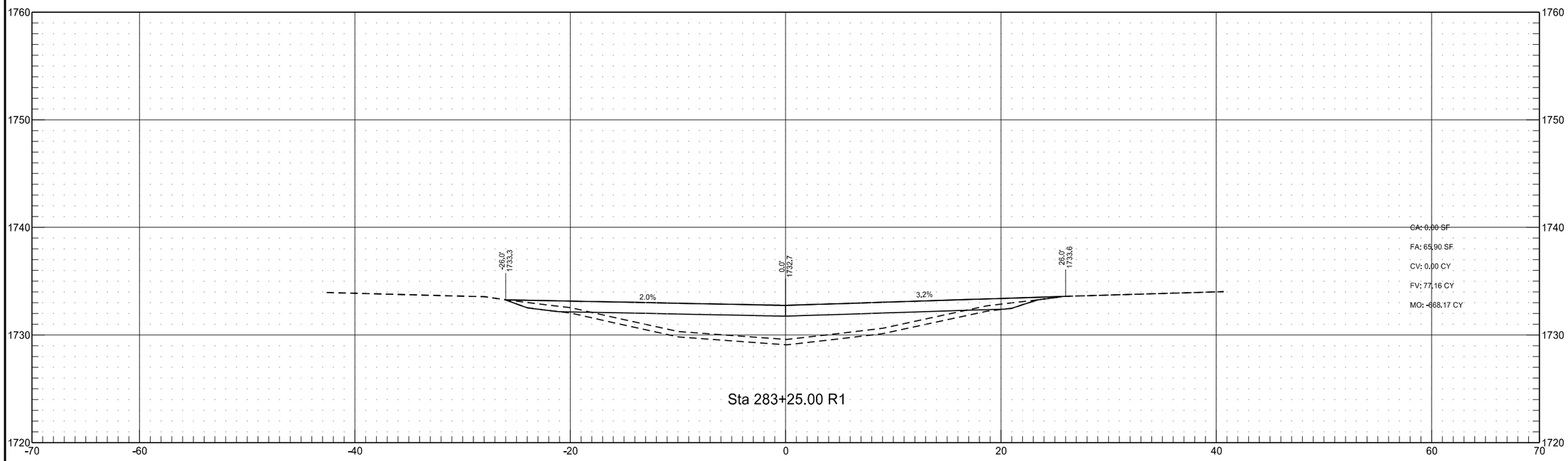

STATE	PROJECT NO.	SECTION NO.	SHEET NO.
ND	IM-1-094(191)166	200	39

East Median Crossover

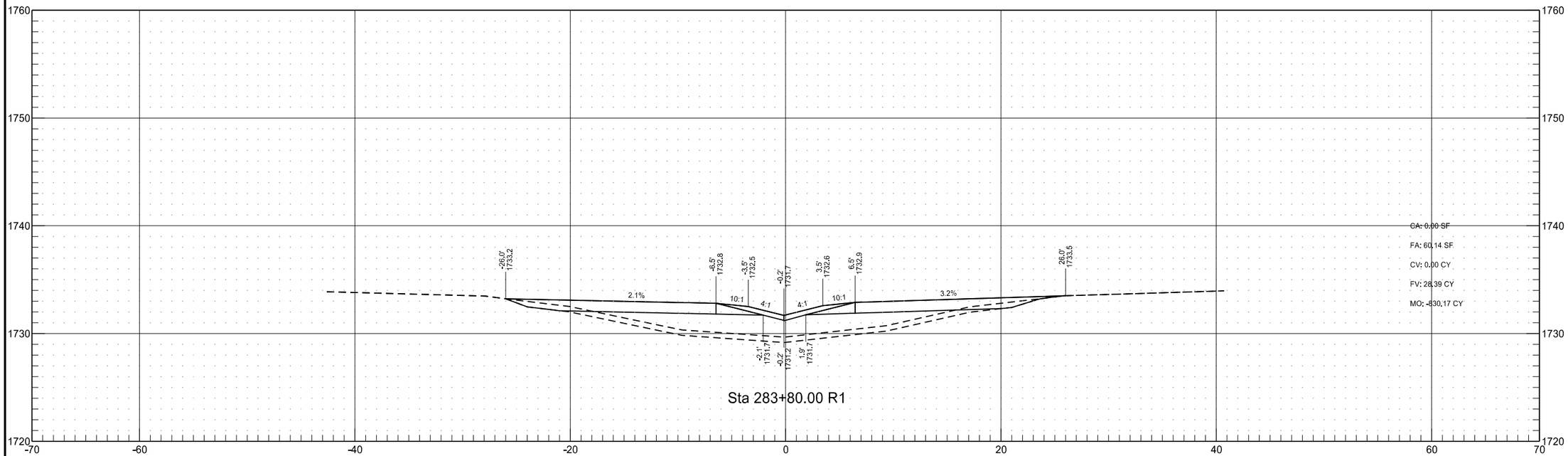

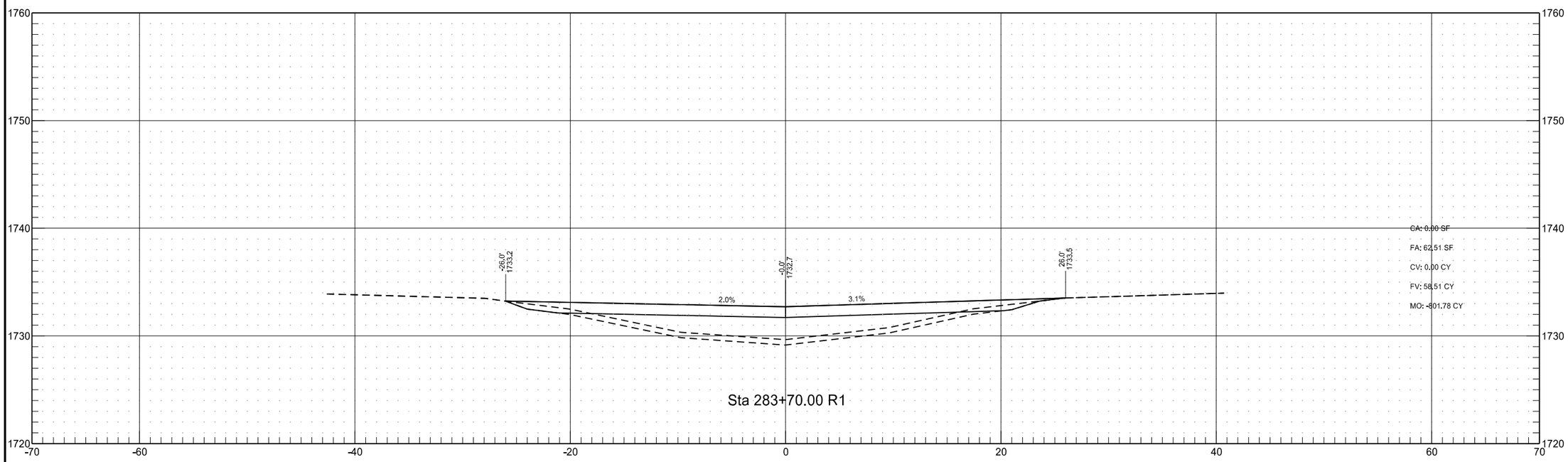

STATE	PROJECT NO.	SECTION NO.	SHEET NO.
ND	IM-1-094(191)166	200	40

East Median Crossover

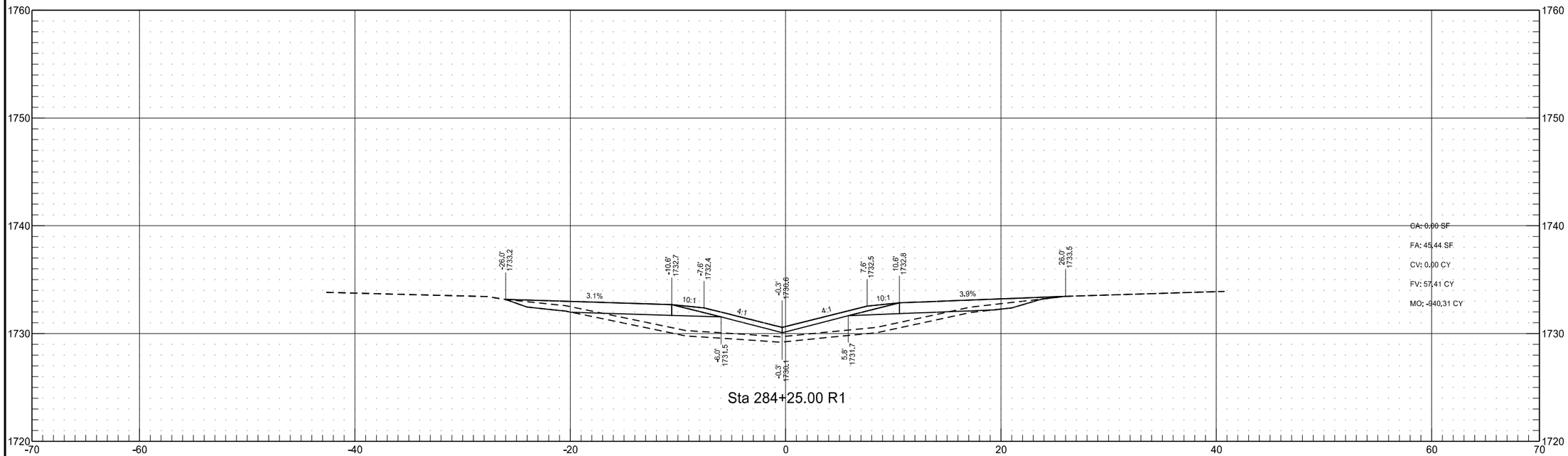

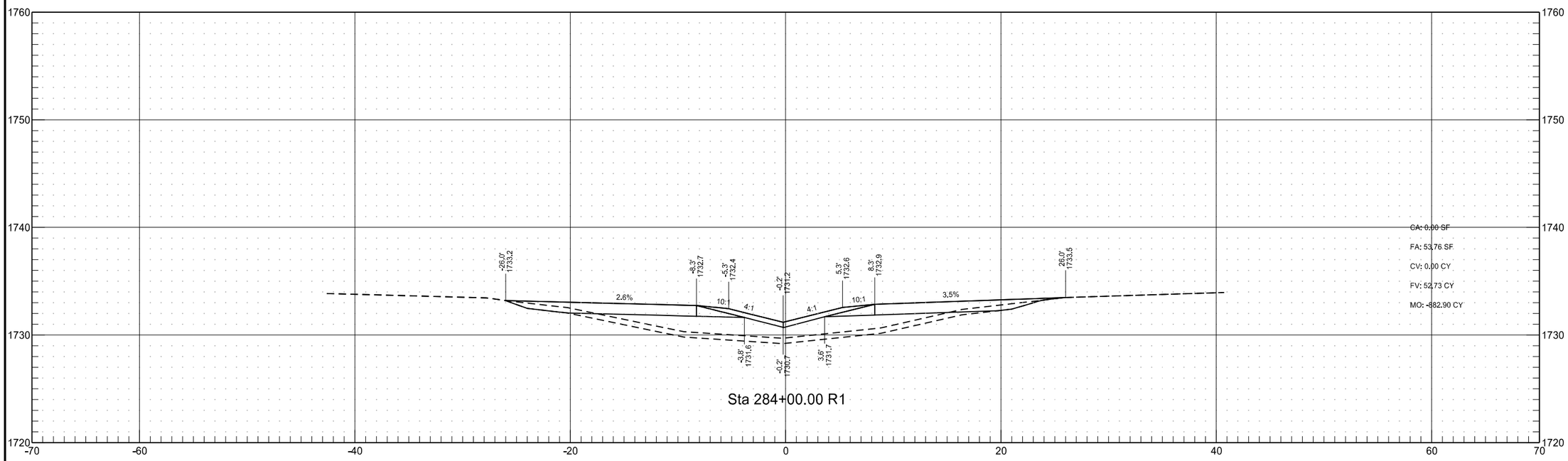

STATE	PROJECT NO.	SECTION NO.	SHEET NO.
ND	IM-1-094(191)166	200	41

East Median Crossover

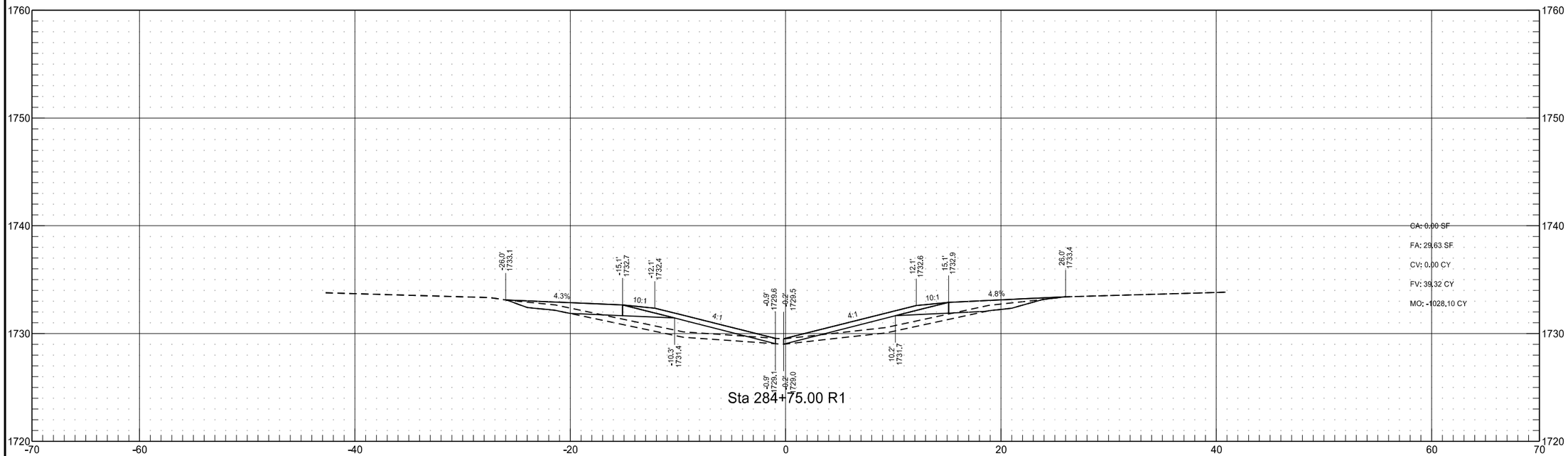

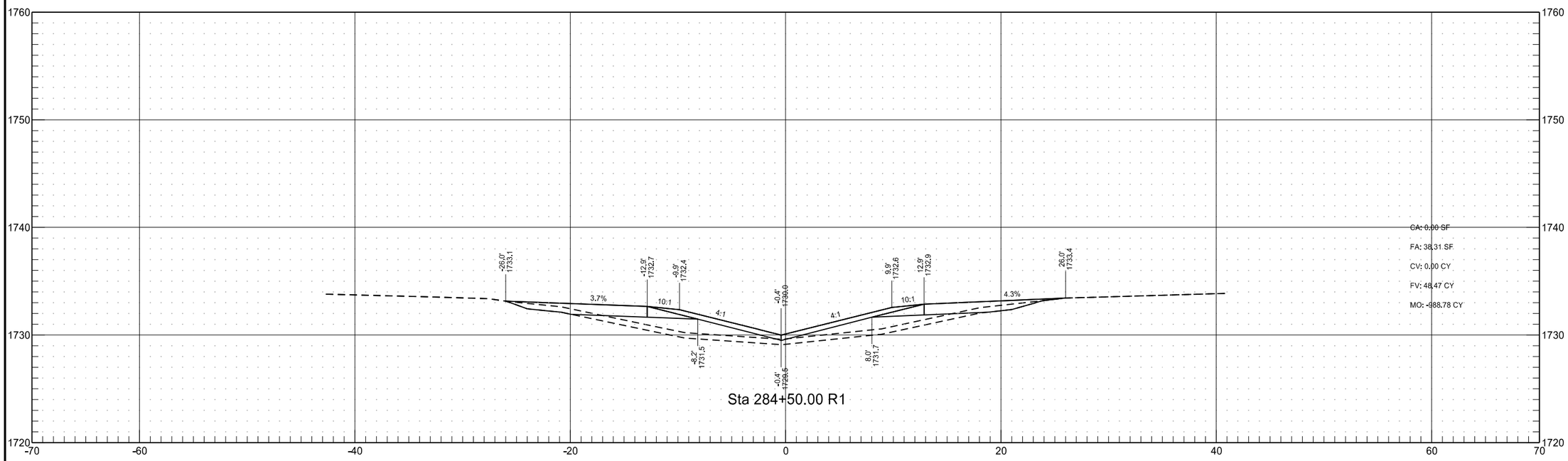

STATE	PROJECT NO.	SECTION NO.	SHEET NO.
ND	IM-1-094(191)166	200	42

East Median Crossover

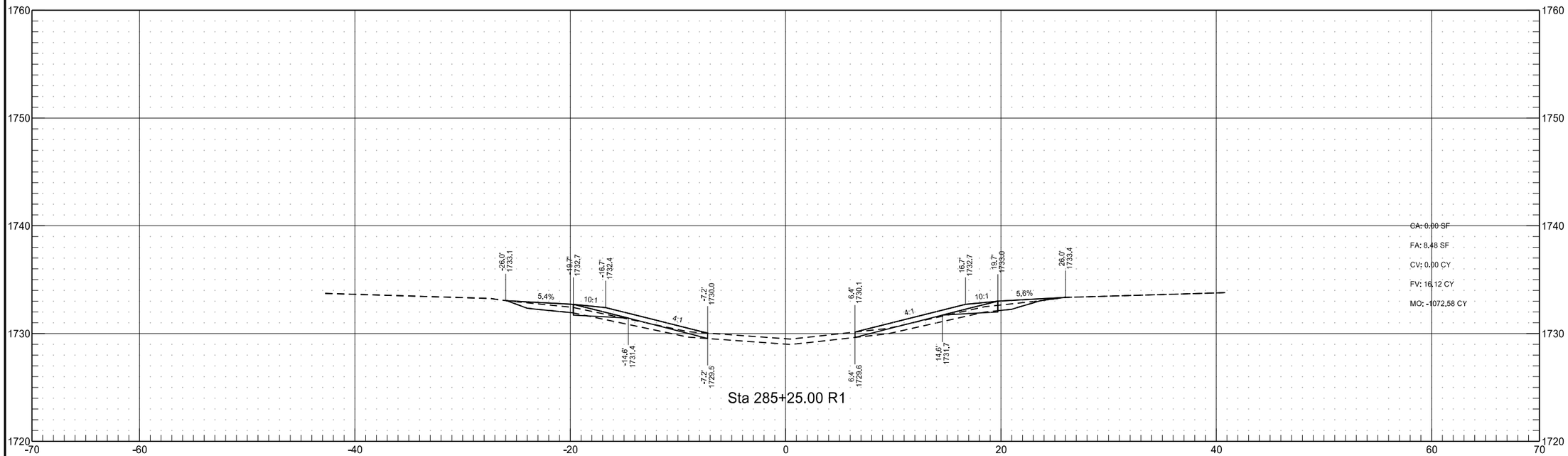

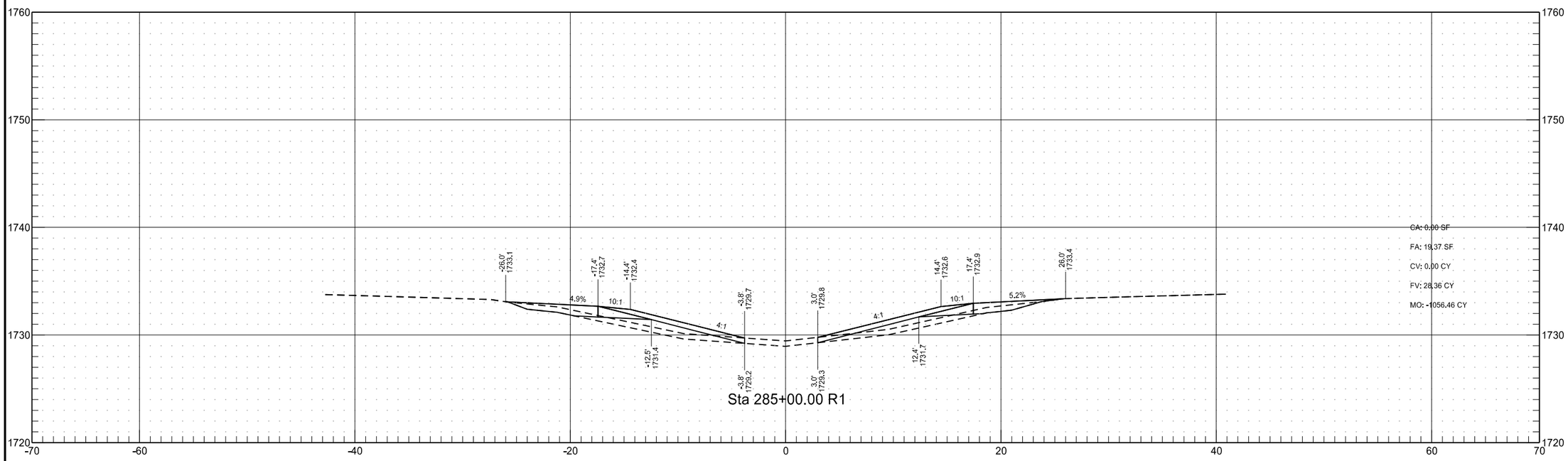

East Median Crossover
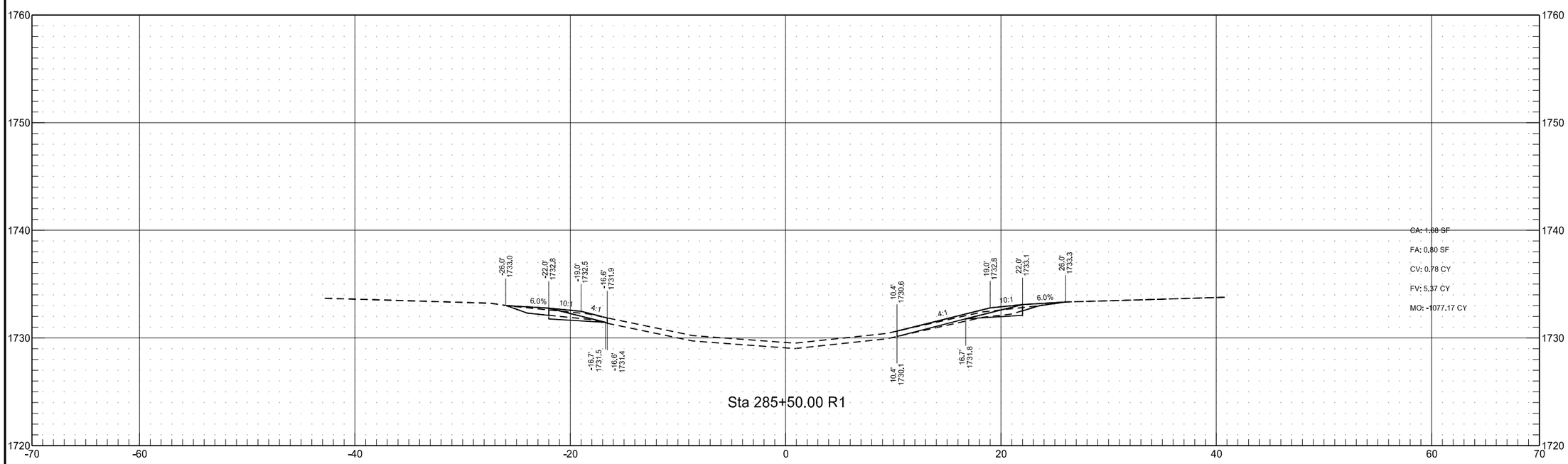
STATE	PROJECT NO.	SECTION NO.	SHEET NO.
ND	IM-1-094(191)166	200	43