NDDOT ABBREVIATIONS

D-101-1

?	This is a special text character used in the labeling of existing features. It indicates a feature that has an unknown characteristic, potentially based on: lack of description, location accuracy or purpose.
Abn	abandoned
Abut	abutment
Ac	acres
Adj	adjusted
Aggr	aggregate
Ahd	ahead
ARV	air release valve
Align	alignment
Al	alley
Alt	alternate
Alum	aluminum
ADA	Americans with Disabilities Act
A	ampere
&	and
Appr	approach
Approx	approximate
ACP	asbestos cement pipe
Asph	asphalt
AC	asphalt cement
Assmd	assumed
@	at
Atten	attenuation
ATR	automatic traffic recorder
Ave	Avenue
Avg	average
ADT	average daily traffic
Az	azimuth
Bk	back
BF	back face
Bs	backsight
Balc	balcony
B Wire	barbed wire
Barr	barricade
Btry	battery
Brg	bearing
BI	beehive inlet
Beg	begin
BM	bench mark
Bkwy	bikeway
Bit	bituminous
Blk	block
Bd Ft	board feet
BH	bore hole
BS	both sides
Bot	bottom
Blvd	Boulevard
Bndry	boundary
BC	brass cap
Brkwy	breakaway
Br	bridge
Bldg	building
BV	butterfly valve
Byp	bypass
C Gdrl	cable guardrail
Calc	calculate
Cd	candela
CIP	cast iron pipe
CB	catch basin
CRS	cationic rapid setting
C Gd	cattle guard
C To C	center to center
Cl or ℄	centerline
Cm	centimeter
Ch	chain
Chnlk	chain-link
Ch Blk	channel block
Ch Ch	channel change
Chk	check
Chsld	chiseled
Cir	circle
Cl	class
Cl	clay
Cl F	clay fill
Cl Hvy	clay heavy
Cl Lm	clay loam
Clnt	clean-out
Clr	clear
Cl&gr	clearing & grubbing
Co S	coal slack
C Gr	coarse gravel
CS	coarse sand
Comb.	combination
Coml	commercial
Compr	compression
CADD	computer aided drafting & design
Conc	concrete
CECB	concrete erosion control blanket
Cond	conductor
Const	construction
Cont	continuous
CSB	continuous split barrel sample
Contr	contraction
Contr	contractor
CP	control point
Coord	coordinate
Cor	corner
Corr	corrected
CAES	corrugated aluminum end section
CAP	corrugated aluminum pipe
CMES	corrugated metal end section
CMP	corrugated metal pipe
CPVCP	corrugated poly-vinyl chloride pipe
CSES	corrugated steel end section
CSFES	corrugated steel flared end section
CSP	corrugated steel pipe
CSTES	corrugated steel traversable end section
C	coulomb
Co	County
Crse	course
Ct	Court
Xarm	cross arm
Xbuck	cross buck
Xsec	cross sections
Xing	crossing
Xrd	Crossroad
Crn	crown
CF	cubic feet
M3	cubic meter
M3/s	cubic meters per second
CY	cubic yard
Cy/mi	cubic yards per mile
Culv	culvert
C&G	curb & gutter
CI	curb inlet
CR	curb ramp
CS	curve to spiral
C	cut
Dd Ld	dead load
Defl	deflection
Defm	deformed
Deg or D	degree
Dlnt	delineate
Dlntr	delineator
Depr	depression
Desc	description
Det	detail
DWP	detectable warning panel
Dtr	detour
Dia or ø	diameter
Dir	direction
Dist	distance
DM	disturbed material
DB	ditch block
DG	ditch grade
Dbl	double
Dn	down
Dwg	drawing
Dr	drive
Drwy	driveway
DI	drop inlet
D	dry density
Ea	each
Esmt	easement
E	East
EB	Eastbound
Elast	elastomeric
EL	electric locker
E Mtr	electric meter
Elec	electric/al
EDM	electronic distance meter
Elev or El	elevation
Ellipt	elliptical
Emb	embankment
Emuls	emulsion/emulsified
ES	end section
Engr	engineer
ESS	environmental sensor station
Eq	equal
Eq	equation
Evgr	evergreen
Exc	excavation
Exst	existing
Exp	expansion
Expy	Expressway
E	external of curve
Extru	extruded
FOS	factor of safety
F	Fahrenheit
FS	far side
F	farad
Fed	Federal
FP	feed point
Ft	feet/foot
Fn	fence
Fn P	fence post
FO	fiber optic
FB	field book
FD	field drive
F	fill
FAA	fine aggregate angularity
FS	fine sand
FH	fire hydrant
Fl	flange
Flrd	flared
FES	flared end section
F Bcn	flashing beacon
FA	flight auger sample
FL	flow line
Ftg	footing
FM	force main
Fs	foresight

NORTH DAKOTA DEPARTMENT OF TRANSPORTATION	
07-01-14	
REVISIONS	
DATE	CHANGE
04-23-18	General Revisions

This document was originally issued and sealed by Roger Weigel, Registration Number PE- 2930, on 04/23/18 and the original document is stored at the North Dakota Department of Transportation

NDDOT ABBREVIATIONS

D-101-2

Fnd	found
Fdn	foundation
Frac	fractional
Frwy	freeway
Frt	front
FF	front face
F Disp	fuel dispenser
FFP	fuel filler pipes
FLS	fuel leak sensor
Furn	furnish/ed
Gal	gallon
Galv	galvanized
Gar	garage
Gs L	gas line
G Reg	gas line regulator
GMV	gas main valve
G Mtr	gas meter
GSV	gas service valve
GVP	gas vent pipe
GV	gate valve
Ga	gauge
Geod	geodetic
GIS	Geographical Information System
G	giga
GPS	Global Positioning System
Gov	government
Grd	graded/grade
Gr	gravel
Grnd	ground
GWM	ground water monitor
Gdrl	guardrail
Gtr	gutter
H Plg	H piling
Hdwl	headwall
Ha	hectare
Ht	height
HI	height of instrument
Hel	helical
H	henry
Hz	hertz
HDPE	high density polyethylene
HM	high mast
HP	high pressure
HPS	high pressure sodium
Hwy	highway
Hor	horizontal
HBP	hot bituminous pavement
HMA	hot mix asphalt
Hr	hour(s)
Hyd	hydrant
Ph	hydrogen ion content
Id	identification
In or "	inch
Incl	inclinometer tube
IMH	inlet manhole
ID	inside diameter
Inst	instrument
Intchg	interchange
Intmdt	intermediate
Intscn	intersection
Inv	invert
IM	iron monument
I Pn	Iron Pin
IP	iron Pipe
Jt	joint
J	joule
Jct	junction
K	kelvin
Kn	kilo newton
Kpa	kilo pascal
Kg	kilogram
Kg/m3	kilogram per cubic meter
Km	kilometer
K	Kip(s)
LS	Land Surveyor (licensed)
LSIT	Land Surveyor In Training
Ln	lane
Lg	large
Lat	latitude
Lt	left
L	length of curve
Lens	lenses
Lvl	level
LB	level book
Lvlng	leveling
Lht	light
LP	light pole
Ltg	lighting
Lig Co	lignite coal
Lig Sl	lignite slack
LF	linear foot
Liq	liquid
LL	liquid limit
L	litre
Lm	loam
Loc	location
LC	long chord
Long.	longitude
Lp	loop
LD	loop detector
Lm	lumen
Lum	luminaire
L Sum	lump sum
Lx	lux
Mb	mailbox
ML	main line
M Hr	man hour
MH	manhole
Mkd	marked
Mkr	marker
Mkg	marking
MA	mast arm
Matl	material
Max	maximum
MC	meander corner
Meas	measure
Mdn	median
MD	median drain
MC	medium curing
M	mega
Mer	meridian
M	meter
M/s	meters per second
M	mid ordinate of curve
MGS	Midwest Guardrail System
Mi	mile
MM	mile marker
MP	mile post
Ml	milliliter
Mm	millimeter
Mm/hr	millimeters per hour
Min	minimum
Misc	miscellaneous
Mon	monument
Mnd	mound
Mtbl	mountable
Mtd	mounted
Mtg	mounting
Mk	muck
Mun	municipal
N	nano
NGS	National Geodetic Survey
NS	near side
Neop	neoprene
Ntwk	network
N	newton
N	North
NE	North East
NW	North West
NB	Northbound
No. or #	number
Obsc	obscure(d)
Obsn	observation
Ocpd	occupied
Ocpy	occupy
Off Loc	office location
O/s	offset
OC	on center
C	one dimensional consolidation
OC	organic content
Orig	original
O To O	out to out
OD	outside diameter
OH	overhead
PMT	pad mounted transformer
Pg	pages
Pntd	painted
Pr	pair
Pnl	panel
Pk	park
PK	Parker-Kalon nail
Pa	pascal
PSD	passing sight distance
Pvmt	pavement
Ped	pedestal
Ped	pedestrian
PPP	pedestrian pushbutton post
Pen.	penetration
Perf	perforated
Per.	perimeter
PL	pipeline
Pl	place
P&P	plan & profile
PL	plastic limit
P Cap	plastic cap
Pl or ℙ	plate
Pt	point
PCC	point of compound curve
PC	point of curve
PI	point of intersection
PRC	point of reverse curvature
PT	point of tangent
POC	point on curve
POT	point on tangent
PE	polyethylene
PVC	polyvinyl chloride
PCC	Portland Cement concrete
Lb or #	pounds
PP	power pole
Preempt	preemption
Prefab	prefabricated
Prfmd or Pref	preformed
Prep	preperation
Press.	pressure

NORTH DAKOTA DEPARTMENT OF TRANSPORTATION	
07-01-14	
REVISIONS	
DATE	CHANGE
08-03-15	General Revisions
04-23-18	General Revisions

This document was originally issued and sealed by Roger Weigel, Registration Number PE- 2930, on 04/23/18 and the original document is stored at the North Dakota Department of Transportation

NDDOT ABBREVIATIONS

D-101-3

PRV	pressure relief valve
Prestr	prestressed
Pvt	private
PD	private drive
Prod.	production/produce
Prog	programmed
Prop.	property
Prop Ln	property line
Ppsd	proposed
PB	pull box
Qty	quantity
Qtr	quarter
Rad or R	radius
RR	railroad
Rlwy	railway
Rsd	raised
RTP	random traverse point
Rge or R	range
RC	rapid curing
Rec	record
Rcy	recycle
RAP	recycled asphalt pavement
RPCC	recycled portland cement concrete
Ref	reference
R Mkr	reference marker
RM	reference monument
RP	reference point
Refl	reflectorized
RCB	reinforced concrete box
RCES	reinforced concrete end section
RCFES	reinforced concrete flared end section
RCTES	reinforced concrete traversable end section
RCP	reinforced concrete pipe
RCPS	reinforced concrete pipe sewer
Reinf	reinforcement
Res	reservation
Rs	residence
Ret	retaining
Rev	reverse
Rt	right
R/W	right of way
Riv	river
Rd	road
Rdbd	road bed
Rdwy	roadway
RWIS	roadway weather information system
Rk	rock
Rt	route
Salv	salvage(d)
Sd	sand
Sdy Cl	sandy clay
Sdy Cl Lm	sandy clay loam
Sdy Fl	sandy fill
Sdy Lm	sandy loam
San	sanitary sewer line
Sc	scoria
Sec	seconds
Sec	section
SL	section line
Sep	separation
Seq	sequence
Serv	service
Sh	shale
Sht	sheet
Shtng	sheeting
Shldr	shoulder
Sw or Sdwk	sidewalk
S	siemens
SD	sight distance
SN	sign number
Sig	signal
Si Cl	silt clay
Si Cl Lm	silty clay loam
Si Lm	silty loam
Sgl	single
SRCP	slotted reinforced concrete pipe
SC	slow curing
SS	slow setting
Sm	small
S	South
SE	South East
SW	South West
SB	Southbound
Sp	spaces
Spcl	special
SA	special assembly
SP	special provisions
G	specific gravity
Spk	spike
SC	spiral to curve
ST	spiral to tangent
SB	split barrel sample
SH	sprinkler head
SV	sprinkler valve
Sq	square
SF	square feet
Km2	square kilometer
M2	square meter
SY	square yard
Stk	stake
Std	standard
N	standard penetration test
Std Specs	standard specifications
Sta	station
Sta Yd	station yards
Stm L	steam line
SEC	steel encased concrete
SMA	stone matrix asphalt
SSD	stopping sight distance
SD	storm drain
St	street
SPP	structural plate pipe
SPPA	structural plate pipe arch
Str	structure
Subd	subdivision
Sub	subgrade
Sub Prep	subgrade preperation
Ss	subsoil
SE	superelevation
SS	supplement specification
Supp	supplemental
Surf	surfacing
Surv	survey
Sym	symmetrical
SI	systems international
Tan	tangent
T	tangent (semi)
TS	tangent to spiral
Tel	telephone
Tel B	Telephone Booth
Tel P	telephone pole
Tv	television
Temp	temperature
Temp	temporary
TBM	temporary bench mark
T	tesla
T	thinwall tube sample
T/mi	tons per mile
Ts	topsoil
Twp or T	township
Traf	traffic
TSCB	traffic signal control box
Tr	trail
Transf	transformer
TB	transit book
Trans	transition
TT	transmission tower
TES	traversable end section
Trans	transverse
Trav	traverse
TP	traverse point
Trtd	treated
Trmt	treatment
Qc	triaxial compression
TERO	tribal employment rights ordinance
Tpl	triple
TP	turning point
Typ	typical
Qu	unconfined compressive strength
Ugrnd	underground
USC&G	US Coast & Geodetic Survey
USGS	US Geologic Survey
Util	utility
VG	valley gutter
Vap	vapor
Vert	vertical
VC	vertical curve
VCP	vitrified clay pipe
V	volt
Vol	volume
Wkwy	walkway
W	water content
WGV	water gate valve
WL	water line
WM	water main
WMV	water main valve
W Mtr	water meter
WSV	water service valve
WW	water well
W	watt
Wrng	wearing
Wb	weber
WIM	weigh in motion
W	west
WB	westbound
Wrng	wiring
W/	with
W/o	without
WC	witness corner
WGS	world geodetic system
Z	zenith

NORTH DAKOTA
DEPARTMENT OF TRANSPORTATION

07-01-14

REVISIONS

DATE	CHANGE
08-03-15	General Revisions
04-23-18	General Revisions

This document was originally issued and sealed by Roger Weigel, Registration Number PE- 2930, on 04/23/18 and the original document is stored at the North Dakota Department of Transportation

NDDOT UTILITY COMPANY AND ORGANIZATION ABBREVIATIONS

D-101-10

702COM	702 Communications
ACCENT	Accent Communications
AGASSIZ WU	Agassiz Water Users Incorporated
AGC	Assiociated General Contractors of America
All PI	Alliance Pipeline
ALL SEAS WU	All Seasons Water Users Association
AMOCO PI	Amoco Pipeline Company
AMRDA HESS	Amerada Hess Corporation
AT&T	AT&T Corporation
B PAW	Bear Paw Energy Incorporated
BAKER ELEC	Baker Electric
BASIN ELEC	Basin Electric Cooperative Incorporated
BEK TEL	Bek Communications Cooperative
BELLE PL	Belle Fourche Pipeline Company
BLM	Bureau of Land Management
BNSF	Burlington Northern Santa Fe Railway
BOEING	Boeing
BRNS RWD	Barnes Rural Water District
BURK-DIV ELEC	Burke-Divide Electric Cooperative
BURL WU	Burleigh Water Users
Cable One	Cable One
CABLE SERV	Cable Services
CAP ELEC	Capital Electric Cooperative Incorporat
CASS CO ELEC	Cass County Electric Cooperative
CASS RWU	Cass Rural Water Users Incorporated
CAV ELEC	Cavalier Rural Electric Cooperative
CBLCOM	Cablecom Of Fargo
CENEX PL	Cenex Pipeline
CENT PL WATER DIST	Central Pipe Line Water District
CENT PWR ELEC	Central Power Electric Cooperative
COE	Corps of Engineers
CONS TEL	Consolidated Telephone
CONT RES	Continental Resource Inc
CPR	Canadian Pacific Railway
D O E	Department Of Energy
DAK CARR	Dakota Carrier Network
DAK CENT TEL	Dakota Central Telephone
DAK RWD	Dakota Rural Water District
DGC	Dakota Gasification Company
DICKEY R NET	Dickey Rural Networks
DICKEY RWU	Dickey Rural Water Users Association
DICKEY TEL	Dickey Telephone
DNRR	Dakota Northern Railroad
DOME PL	Dome Pipeline Company
DVELEC	Dakota Valley Electric Cooperative
DVMW	Dakota, Missouri Valley & Western
ENBRDG	Enbridge Pipelines Incorporated
ENVENTIS	Enventis Telephone
FALK MNG	Falkirk Mining Company
FHWA	Federal Highway Administration
G FKS-TRL WD	Grand Forks-traill Water District
GETTY TRD & TRAN	Getty Trading & Transportation
GLDN W ELEC	Golden West Electric Cooperative
GRGS CO TEL	Griggs County Telephone
GT PLNS NAT GAS	Great Plains Natural Gas Company
HALS TEL	Halstad Telephone Company
IDEA1	Idea1
INT-COMM TEL	Inter-Community Telephone Company
KANEB PL	Kaneb Pipeline Company
KEM ELEC	Kem Electric Cooperative Incorporated
KOCH GATH SYS	Koch Gathering Systems Incorporated
LKHD PL	Lakehead Pipeline Company
LNGDN RWU	Langdon Rural Water Users Incorporated
LWR YELL R ELEC	Lower Yellowstone Rural Electric
MCKNZ CON	McKenzie Consolidated Telcom
MCKNZ ELEC	McKenzie Electric Cooperative
MCKNZ WRD	McKenzie County Water Resource District
MCLEOD	McLeod USA
MCLN ELEC	McLean Electric Cooperative
MCLN-SHRDN R WAT	McLean-Sheridan Rural Water
MDU	Montana-dakota Utilities
MID-CONT CABLE	Mid-Continent Cable
MIDSTATE TEL	Midstate Telephone Company
MINOT CABLE	Minot Cable Television
MINOT TEL	Minot Telephone Company
MISS VALL COMM	Missouri Valley Communications
MISS W W S	Missouri West Water System
MNKOTA PWR	Minnkota Power
MOR-GRAN-SOU ELEC	Mor-gran-sou Electric Cooperative
MOUNT-WILLI ELEC	Mountrail-williams Electric Cooperative
MRE LBTY TEL	Moore & Liberty Telephone
MUNICIPAL	City Water And Sewer
MUNICIPAL	City Of '.....'
N CENT ELEC	North Central Electric Cooperative
N VALL W DIST	North Valley Water District
ND PKS & REC	North Dakota Parks And Recreation
ND TEL	North Dakota Telephone Company
NDDOT	North Dakota Department of Transportation
NDSU SOIL SCI DEPT	NDSU Soil Science Department
NEMONT TEL	Nemont Telephone
NODAK R ELEC	Nodak Rural Electric Cooperative
NOON FRMS TEL	Noonan Farmers Telephone Company
NPR	Northern Plains Railroad
NSP	Northern States Power
NTH PRAIR RW	Northern Prairie Rural Water Association
NTHN BRDR PL	Northern Border Pipeline
NTHN PLNS ELEC	Northern Plains Electric Cooperative Incorporated
NTHWSTRN REF	Northwestern Refinery Company
NW COMM	Northwest Communication Cooperation
ONEOK	Oneok gas
OSHA	Occupational Safety and Health Administration
OTTR TL PWR	Otter Tail Power Company
P L E M	Prairielands Energy Marketing
POLAR COM	Polar Communications
PVT ELEC	Private Electric
QWEST	Qwest Communications
R&T W SUPPLY	R & T Water Supply Association
RAMSEY R SEW	Ramsey Rural Sewer Association
RAMSEY RW	Ramsey Rural Water Association
RAMSEY UTIL	Ramsey County Rural Utilities
RED RIV TEL	Red River Rural Telephone
RESVTN TEL	Reservation Telephone
ROBRTS TEL	Roberts Company Telephone
R-RIDER ELEC	Roughrider Electric Cooperative
RRVW	Red River Valley & Western Railroad
S CENT REG WD	South Central Regional Water District
S E W U	South East Water Users Incorporated
SCOTT CABLE	Scott Cable Television Dickinson
SHERDN ELEC	Sheridan Electric Cooperative
SHEYN VLY ELEC	Sheyenne Valley Electric Cooperative
SKYTECH	Skyland Technologies Incorporated
SLOPE ELEC	Slope Electric Cooperative Incorporated
SOURIS RIV TELCOM	Souris River Telecommunications
ST WAT COMM	State Water Commission
STATE LN WATER	State Line Water Cooperative
STER ENG	Sterling Energy
STUT RWU	Stutsman Rural Water Users
SW PL PRJ	Southwest Pipeline Project
T M C	Turtle Mountain Communications
TCI	TCI of North Dakota
TESORO HGH PLNS PL	Tesoro High Plains Pipeline
TRI-CNTY WU	Tri-County Water Users Incorporated
TRL CO RWU	Traill County Rural Water Users
UNTD TEL	United Telephone
UPPR SOUR WUA	Upper Souris Water Users Association
US SPRINT	U.S. Sprint
USAF MSL CABLE	U.S.A.F. Missile Cable
USFWS	US Fish and Wildlife Service
USW COMM	U.S. West Communications
VRNDRY ELEC	Verendrye Electric Cooperative
W RIV TEL	West River Telephone Incorporated
WEB	W. E. B. Water Development Association
WILLI RWA	Williams Rural Water Association
WILSTN BAS PL	Williston Basin Interstate Pipeline Company
WLSH RWD	Walsh Water Rural Water District
WOLVRTN TEL	Wolverton Telephone
XLENER	Xcel Energy
YSVR	Yellowstone Valley Railroad

NORTH DAKOTA
DEPARTMENT OF TRANSPORTATION

07-01-14

REVISIONS

DATE	CHANGE
04-23-18	General Revisions

This document was originally issued and sealed by Roger Weigel, Registration Number PE- 2930, on 04/23/18 and the original document is stored at the North Dakota Department of Transportation

Line Styles

D-101-20

Existing Topography

- Existing Ground Void
- Existing Cemetary Boundary
- Existing Box Culvert Bridge
- Existing Concrete Surface
- Existing Drainage Structure
- Existing Gravel Surface
- Existing Riprap
- Existing Dirt Surface
- Existing Asphalt Surface
- Existing Tie Point Line
- Existing Railroad Centerline
- Existing Guardrail Cable
- Existing Guardrail Metal
- Existing Edge of Water
- Existing Fence
- Existing Railroad
- Existing Field Line
- Exst Flow
- Existing Curb
- Existing Valley Gutter
- Existing Driveway Gutter
- Existing Curb and Gutter
- Existing Mountable Curb and Gutter
- Existing 3-Cable w Posts
- Site Boundary
- Existing Berm, Dike, Pit, or Earth Dam
- Existing Ditch Block
- Existing Tree Boundary
- Existing Brush or Shrub Boundary
- Existing Retaining Wall
- Existing Planter or Wall
- Existing W-Beam Guardrail with Posts
- Existing Railroad Switch
- Gravel Pit - Borrow Area
- Existing Wet Area-Vegetation Break

Proposed Topography

- 3-Cable w Posts
- Flow
- Fence
- Remove Line
- Wall
- Retaining Wall (Plan View)
- W-Beam w Posts

Existing Utilities

- Existing Electrical
- Existing Fiber Optic Line
- Existing TV Fiber Optic
- Existing Gas Pipe
- Existing Overhead Utility Line
- Existing Power
- Existing Fuel Pipeline
- Existing Undefined Above Ground Pipe Line
- Existing Sanitary Sewer
- Existing Sanitary Force Main
- Existing Storm Drain
- Existing Storm Drain Force Main
- Existing Culvert
- Existing Telephone Line
- Existing TV Line
- Existing Water or Steam Line
- Existing Under Drain
- Existing Slotted Drain
- Existing Conduit
- Existing Conductor
- Existing Down Guy Wire Down Guy
- Existing Underground Vault or Lift Station

Proposed Utilities

- 24 Inch Pipe
- Reinforced Concrete Pipe
- Under Drain
- Edge Drain

Traffic Utilities

- Conductor
- Fiber Optic
- Existing Loop Detector
- Existing Double Micro Loop Detector
- Micro Loop Detector Double
- Existing Micro Loop Detector
- Micro Loop Detector
- Signal Head with Mast Arm
- Existing Signal Head with Mast Arm

Sign Structures

- Existing Overhead Sign Structure
- Existing Overhead Sign Structure Cantilever
- Overhead Sign Structure Cantilever

NORTH DAKOTA
DEPARTMENT OF TRANSPORTATION

07-01-14

REVISIONS

DATE	CHANGE
09-23-16	Added and Revised Items, Organized by Functional Groups

This document was originally issued and sealed by Roger Weigel, Registration Number PE- 2930, on 09/23/16 and the original document is stored at the North Dakota Department of Transportation

Line Styles

D-101-21

Right Of Way

- Easement
- Existing Easement
- Right of Way
- Existing Right of Way
- Existing Right of Way Railroad
- Existing Right of Way Not State Owned
- Existing Government Lot Line
- Existing Adjacent Block Lines
- Existing Adjacent Lot Lines
- Existing Adjacent Property Line
- Existing Adjacent Subdivision Lines
- Sight Distance Triangle Line
- Dimension Leader

Boundary Control

- Existing City Corporate Limits or Reservation Boundary
- Existing State or International Line
- Existing Township
- Existing County
- Existing Section Line
- Existing Quarter Section Line
- Existing Sixteenth Section Line
- Existing Centerline
- Tangent Line

Cross Sections and Typicals

- Existing Ground
- Existing Topsoil (Cross Section View)
- Void — Void — Void — V Existing Ground Void (Not Surveyed)
- Existing Concrete
- Existing Aggregate (Cross Section View)
- Existing Curb and Gutter (Cross Section View)
- Existing Asphalt (Cross Section View)
- Existing Reinforcement Rebar

Geotechnical

- D — D Geotextile Fabric Type D
- Geo — Geo Geogrid
- R — R Geotextile Fabric Type R
- R — R Geotextile Fabric Type R1
- RR — RR Geotextile Fabric Type RR
- S — S Geotextile Fabric Type S
- Subgrade Reinforcement
- Failure Line

Countours

- Depression Contours
- Supplemental Contour

Profile

- Subgrade, Subcut or Ditch Grade
- Topsoil Profile

Striping

- Centerline Pavement Marking
- Barrier with Centerline Pavement Marking
- Barrier Pavement Marking
- Stripe 4 IN Dotted Extension White
- Stripe 8 IN Dotted Extension White
- Stripe 8 IN Lane Drop

Pavement Joints

- Doweled Joint
- Tie Bar 30 Inch 4 Foot Center to Center
- Tie Bar 18 Inch 3 Foot Center to Center
- Tie Bar at Random Spacing

Bridge Details

- Hidden Object
- Small Hidden Object
- Large Hidden Object
- Phantom Object
- Centerline Main
- Centerline
- Existing Ground (Details)
- Existing Conditions
- Sheet Piling

Erosion Control

- Limits of Const Transition Line
- Bale Check
- Rock Check
- S — S Floating Silt Curtain
- SF — SF Silt Fence
- Excavation Limits
- Fiber Rolls

Environmental

- Wetland Mitigation
- Existing Wetland Easement USFWS
- Existing Wetland Jurisdictional
- Existing Wetland
- Tree Row

NORTH DAKOTA DEPARTMENT OF TRANSPORTATION	
07-01-14	
REVISIONS	
DATE	CHANGE
09-23-16	Added and Revised Items, Organized by Functional Groups

This document was originally issued and sealed by Roger Weigel, Registration Number PE- 2930, on 09/23/16 and the original document is stored at the North Dakota Department of Transportation

Symbols

D-101-30

- North Arrow (Half Scale)
- Truck Mounted Attenuator
- Type I Barricade
- Type II Barricade
- Type III Barricade
- Catch Basin
- Cairn or Stone Circle
- Video Detection Camera
- Storm Drain Cap or Stub
- Corrugated Metal End Section 18 Inch
- Corrugated Metal End Section 24 Inch
- Corrugated Metal End Section 30 Inch
- Corrugated Metal End Section 36 Inch
- Corrugated Metal End Section 42 Inch
- Corrugated Metal End Section 48 Inch
- Concrete Foundation
- Ground Connection Conductor
- Neutral Connection Conductor
- Phase 1 Connection Conductor
- Phase 2 Connection Conductor
- Traffic Cone
- Signal Controller
- Pad Mounted Signal Controller
- Alignment Data Point
- Emergency Vehicle Detector
- Attenuation Device
- Diamond Grade Delineator Type A
- Diamond Grade Delineator Type B
- Diamond Grade Delineator Type C
- Diamond Grade Delineator Type D
- Diamond Grade Delineator Type E
- Flexible Delineator
- Flexible Delineator Type A
- Flexible Delineator Type B
- Flexible Delineator Type C
- Flexible Delineator Type D
- Flexible Delineator Type E
- Delineator Type A
- Delineator Type A Reset
- Delineator Type B
- Delineator Type B Reset
- Delineator Type C
- Delineator Type D
- Delineator Type E
- Delineator Drums
- Spot Elevation
- Existing Access Control Arrow
- Existing Artifact
- Existing Flashing Beacon
- Existing Benchmark
- Existing Railroad Battery Box
- Existing Bush or Shrub
- Existing Gas Cap or Stub
- Existing Sanitary Cap or Stub
- Existing Storm Drain Cap or Stub
- Existing Water Cap or Stub
- Existing Sanitary Cleanout
- Existing Concrete Foundation
- Existing Traffic Signal Controller
- Existing Pad Mounted Signal Controller
- Existing Sixteenth Section Corner
- Existing Quarter Section Corner
- Existing Section Corner
- Existing Railroad Crossbuck
- Existing Satellite Dish
- Existing Fuel Dispensers
- Existing Flexible Delineator Type A
- Existing Flexible Delineator Type B
- Existing Flexible Delineator Type C
- Existing Flexible Delineator Type D
- Existing Flexible Delineator Type E
- Existing Delineator Type A
- Existing Delineator Type B
- Existing Delineator Type C
- Existing Delineator Type D
- Existing Delineator Type E
- Existing EFB Misc
- Existing Flashing Beacon
- Existing Pipe Mounted Flasher
- Existing Pad Mounted Feed Point
- Existing Pipe Mounted Feed Point with Pad
- Existing Pole Mounted Feed Point
- Existing Railroad Frog
- Existing Snow Gate 18
- Existing Snow Gate 28
- Existing Snow Gate 40
- Existing Headwall
- Existing Pedestrian Head with Number
- Existing Signal Head
- Existing Sprinkler Head
- Existing Fire Hydrant
- Existing Catch Basin Drop Inlet
- Existing Curb Inlet
- Existing Manhole Inlet
- Existing Junction Box

NORTH DAKOTA DEPARTMENT OF TRANSPORTATION	
07-01-14	
REVISIONS	
DATE	CHANGE

This document was originally issued and sealed by Roger Weigel, Registration Number PE-2930, on 07/01/14 and the original document is stored at the North Dakota Department of Transportation

Symbols

D-101-31

- Existing Light Standard
- Existing High Mast Light Standard 10 Luminaire
- Existing High Mast Light Standard 3 Luminaire
- Existing High Mast Light Standard 4 Luminaire
- Existing High Mast Light Standard 5 Luminaire
- Existing High Mast Light Standard 6 Luminaire
- Existing High Mast Light Standard 7 Luminaire
- Existing High Mast Light Standard 8 Luminaire
- Existing High Mast Light Standard 9 Luminaire
- Existing Overhead Sign Structure Load Center
- Existing Luminaire
- Existing Light Standard Luminaire
- Existing Federal Mailbox
- Existing Private Mailbox
- Existing Meander Section Corner
- Existing Meter
- Existing Electrical Manhole
- Existing Gas Manhole
- Existing Sanitary Manhole
- Existing Sanitary Force Main Manhole
- Existing Sanitary Manhole with Valve
- Existing Storm Drain Manhole
- Existing Force Main Storm Drain Manhole
- Existing Force Main Storm Drain Manhole with Valve
- Existing Telephone Manhole
- Existing Manhole with Valve Water
- Existing Water Manhole
- Existing Mile Post Type A
- Existing Mile Post Type B
- Existing Mile Post Type C
- Existing Reference Marker
- Existing RW Marker
- Existing Utility Marker
- Iron Monument Found
- Iron Pin R/W Monument
- Existing Object Marker Type I
- Existing Object Marker Type II
- Existing Object Marker Type III
- Existing Electrical Pedestal
- Existing Telephone Pedestal
- Existing Fiber Optic Telephone Pedestal
- Existing TV Pedestal
- Existing Fiber Optic TV Pedestal
- Existing Fuel Filler Pipes
- Existing Traverse PI Aerial Panel
- Existing Pole
- Existing Power Pole
- Existing Power Pole with Transformer
- Existing Telephone Pole
- Existing Wood Pole
- Existing Post
- Existing Pedestrian Push Button Post
- Existing Control Point CP
- Existing Control Point GPS-RTK
- Existing Control Point TRI
- Existing Reference Marker Point NGS
- Existing Pull Box
- Existing Intelligent Transportation Pull Box
- Existing Water Pump
- Existing Slotted Reinforced Concrete Pipe
- Existing RR Profile Spot
- Existing Fuel Leak Sensors
- Existing Highway Sign
- Existing Miscellaneous Spot
- Existing Lighting Standard Pole
- Existing Traffic Signal Standard
- Existing Transformer
- Existing Large Evergreen Tree
- Existing Small Evergreen Tree
- Existing Large Tree
- Existing Small Tree
- Existing Tree Trunk
- Existing Pad Mounted Traffic Signal Control Box
- Existing Undefined Manhole
- Existing Undefined Pull Box
- Existing Undefined Pedestal
- Existing Undefined Valve
- Existing Undefined Pipe Vent
- Existing Gas Valve
- Existing Water Valve
- Existing Fuel Pipe Vent
- Existing Gas Pipe Vent
- Existing Sanitary Pipe Vent
- Existing Storm Drain Pipe Vent
- Existing Water Pipe Vent
- Existing Weather Station
- Existing Ground Water Well Bore Hole
- Existing Windmill or Tower
- Existing Witness Corner
- Flashing Beacon
- Flagger
- Pipe Mounted Flasher
- Sanitary Force Main with Valve

NORTH DAKOTA DEPARTMENT OF TRANSPORTATION	
07-01-14	
REVISIONS	
DATE	CHANGE

This document was originally issued and sealed by Roger Weigel, Registration Number PE-2930, on 07/01/14 and the original document is stored at the North Dakota Department of Transportation

Symbols

D-101-32

- Pad Mounted Feed Point
- Pipe Mounted Feed Point with Pad
- Pole Mounted Feed Point
- Headwall
- Double Headwall with Vegitation Barrier
- Single Headwall with Vegitation Barrier
- Pole Mounted Head
- Sprinkler Head
- Fire Hydrant
- Inlet Type 1
- Inlet Type 2
- Double Inlet Type 2
- Inlet Grate Type 2
- Junction Box
- High Mast Light Standard 10 Luminaire
- High Mast Light Standard 3 Luminaire
- High Mast Light Standard 4 Luminaire
- High Mast Light Standard 5 Luminaire
- High Mast Light Standard 6 Luminaire
- High Mast Light Standard 7 Luminaire
- High Mast Light Standard 8 Luminaire
- High Mast Light Standard 9 Luminaire
- Relocate Light Standard
- Overhead Sign Structure Load Center
- Light Standard 100 Watt High Pressure Sodium Vapor Luminaire
- Light Standard 1000 Watt High Pressure Sodium Vapor Luminaire
- Light Standard 150 Watt High Pressure Sodium Vapor Luminaire
- Light Standard 175 Watt High Pressure Sodium Vapor Luminaire
- Light Standard 200 Watt High Pressure Sodium Vapor Luminaire
- Light Standard 250 Watt High Pressure Sodium Vapor Luminaire
- Light Standard 310 Watt High Pressure Sodium Vapor Luminaire
- Light Standard 35 Watt High Pressure Sodium Vapor Luminaire
- Light Standard 400 Watt High Pressure Sodium Vapor Luminaire
- Light Standard 50 Watt High Pressure Sodium Vapor Luminaire
- Light Standard 70 Watt High Pressure Sodium Vapor Luminaire
- Light Standard 700 Watt High Pressure Sodium Vapor Luminaire
- Manhole
- Manhole 48 Inch
- Sanitary Force Main Manhole
- Sanitary Sewer Manhole
- Storm Drain Manhole
- Storm Drain Manhole with Inlet
- Reset Mile Post
- Mile Post Type A
- Mile Post Type B
- Mile Post Type C
- Right of Way Marker
- Tubular Marker
- Alignment Monument
- Iron Pin Reference Monument
- Object Marker Type I
- Object Marker Type II
- Object Marker Type III
- Caution Mode Arrow Panel
- Back to Back Vertical Panel Sign
- Double Direction Arrow Panel
- Left Directional Arrow Panel
- Right Directional Arrow Panel
- Sequencing Arrow Panel
- Truck Mounted Arrow Panel
- Power Pole
- Wood Pole
- Pedestrian Push Button Post
- Property Corner
- Pull Box
- Intelligent Transportation Pull Box
- Sanitary Pump
- Storm Drain Pump
- Reinforced Pavement
- Reinforced Concrete End Section 15 Inch
- Reinforced Concrete End Section 18 Inch
- Reinforced Concrete End Section 24 Inch
- Reinforced Concrete End Section 30 Inch
- Reinforced Concrete End Section 36 Inch
- Reinforced Concrete End Section 42 Inch
- Reinforced Concrete End Section 48 Inch
- Reinforced Concrete End Section 54 Inch
- Reset Right of Way Marker
- Reset USGS Marker
- Right of Way Markers
- Riser 30 Inch
- CSB — Continuous Split Barrel Sample
- FA — Flight Auger Sample
- SB — Split Barrel Sample
- T — Thinwall Tube Sample
- Highway Sign
- SNOW GATE 18 FT
- SNOW GATE 28 FT
- SNOW GATE 40 FT
- N — Standard Penetration Test
- Transformer
- Incl — Inclinometer Tube
- Underdrain Cleanout
- Excavation Unit
- Water Valve

NORTH DAKOTA DEPARTMENT OF TRANSPORTATION	
07-01-14	
REVISIONS	
DATE	CHANGE

This document was originally issued and sealed by Roger Weigel, Registration Number PE-2930, on 07/01/14 and the original document is stored at the North Dakota Department of Transportation

BREAKAWAY SYSTEMS FOR CONSTRUCTION ZONE SIGNS

D-704-7

Perforated Tube

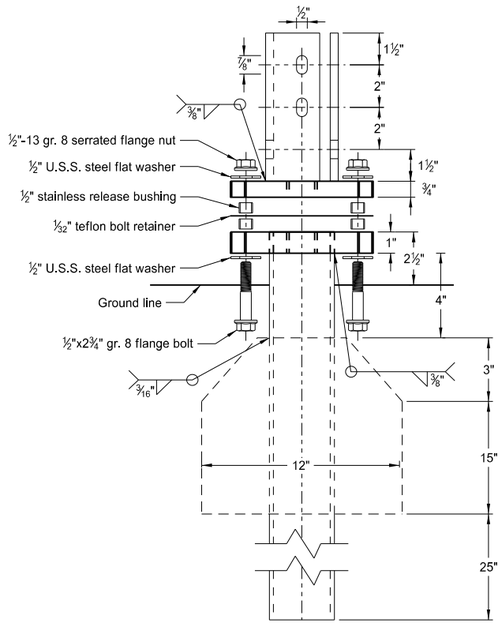

Multi-Directional
Slip Base Assembly

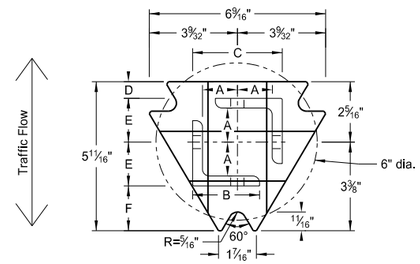

Top Post Receiver
Plate - ASTM A572 grade 50
Angle Receiver - 2½"x2½"x⅜" ASTM A36 structural angle

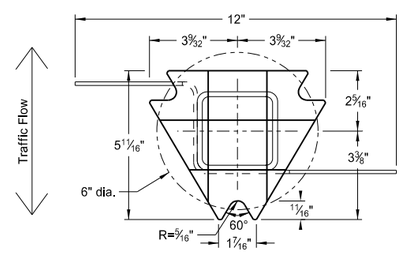

Bottom Soil Stub
Tube - 3"x3"x7 gauge ASTM A500 grade B tube
Stabilizing Wing - 7 gauge H.R.P.O. ASTM A1011
Plate - ASTM A572 grade 50

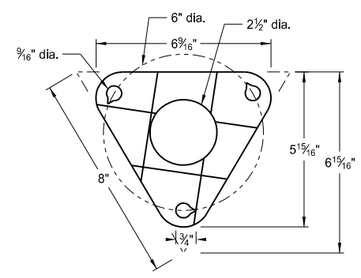

Bolt Retainer for Base Connection
Bolt Retainer- 1/32" Reprocessed Teflon

Notes:

1. Torque slip base bolts as specified by manufacturer.
2. Use anchor with 43.9 KSI yield strength and 59.3 KSI tensile strength.
3. Provide 4" vertical clearance for anchor or breakaway base. Measure the 4"x60" measurement above and below post location and back and ahead of post.
4. In concrete sidewalk, use same anchor without wings.
5. Provide more than 7' between the first and fourth posts of a four post sign.

Telescoping Perforated Tube						
Number of Posts	Post Size in.	Wall Thick-ness Gauge	Sleeve Size in.	Wall Thick-ness Gauge	Slip Base	Anchor Size without Slip Base in.
1	2	12			No	2¼
1	2¼	12			No	2½
1	2½	12			(A)	3
1	2½	10			Yes	
1	2¼	12	2	12	Yes	
1	2½	12	2¼	12	Yes	
2	2	12			No	2¼
2	2¼	12			No	2½
2	2½	12			Yes	
2	2½	12			Yes	
2	2¼	10	2	12	Yes	
2	2½	12	2¼	12	Yes	
3 & 4	2½	12			Yes	
3 & 4	2½	10			Yes	
3 & 4	2½	12	2¼	12	Yes	
3 & 4	2¼	12	2	12	Yes	
3 & 4	2½	10	2 3/16	10	Yes	

(A) Use breakaway base when support is placed in weak soils. Engineer determines if soils are weak.

(B) For additional wind load, insert the 2 3/16"x10 ga. into 2½"x10 ga.

Properties of Telescoping Perforated Tube						
Tube Size in.	Wall Thickness in.	U.S. Standard Gauge	Weight per Foot lbs.	Moment of Inertia in.^{4}	Cross Sec. Area in.^{2}	Section Modulus in.^{3}
1½ x 1½	0.105	12	1.702	0.129	0.380	0.172
2 x 2	0.105	12	2.416	0.372	0.590	0.372
2¼ x 2¼	0.105	12	2.773	0.561	0.695	0.499
2 3/16 x 2 3/16	0.135	10	3.432	0.605	0.841	0.590
2½ x 2½	0.105	12	3.141	0.804	0.803	0.643
2½ x 2½	0.135	10	4.006	0.979	1.010	0.785

Top Post Receiver Data Table						
Square Post Sizes (B)	A	B	C	D	E	F
2 3/16"x10 ga.	1 9/64"	2½"	3 1/32"	25/32"	1 33/64"	1⅞"
2½"x10 ga.	1 9/32"	2½"	3 5/16"	⅝"	1 21/32"	1¾"

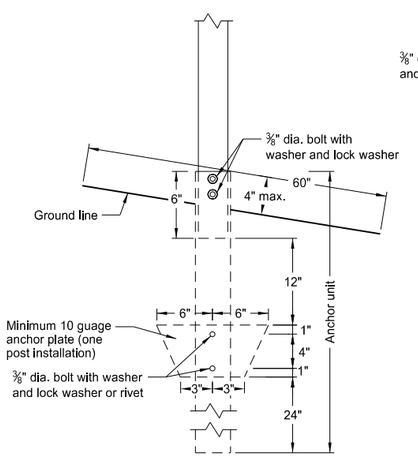

Anchor Unit and Post Assembly

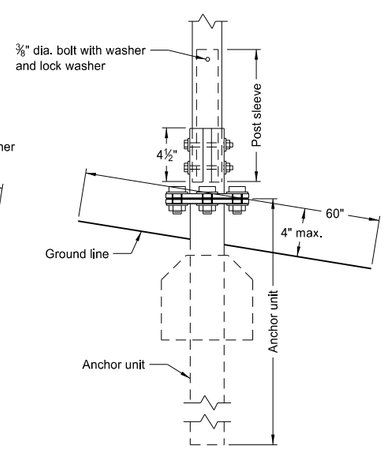

Multi-Directional
Slip Base Anchor Unit
and Post Sleeve Assembly

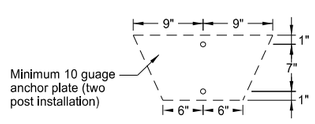

NORTH DAKOTA DEPARTMENT OF TRANSPORTATION	
2-28-14	
REVISIONS	
DATE	CHANGE
9-27-17	Updated to active voice

This document was originally issued and sealed by Roger Weigel, Registration Number PE- 2930, on 9/27/2017 and the original document is stored at the North Dakota Department of Transportation

BREAKAWAY SYSTEMS FOR CONSTRUCTION ZONE SIGNS

D-704-8

U-Channel Post

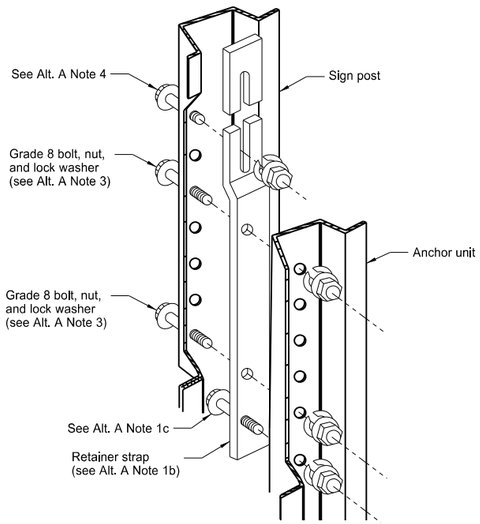

Detail A

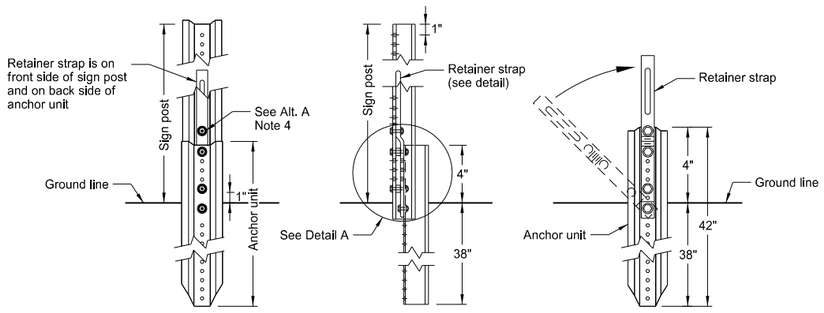

Front View | Side View | Back View

Breakaway U-Channel Detail
Alternate A

Install a maximum of 2 posts within 7'.

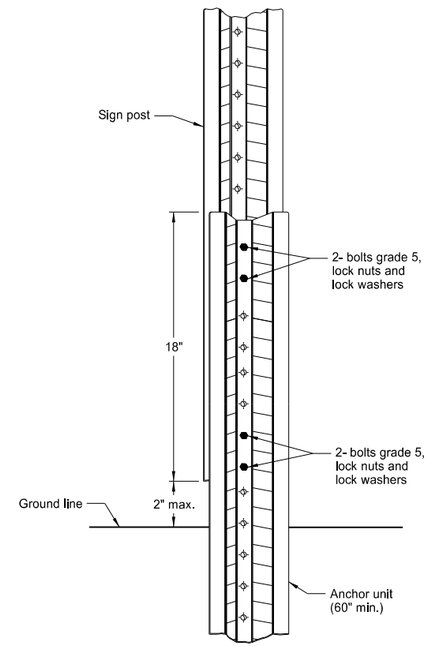

Breakaway U-Channel Splice Detail
Alternate B
(2.5 and 3 lb/ft)

Install a maximum of 3 posts within 7'.

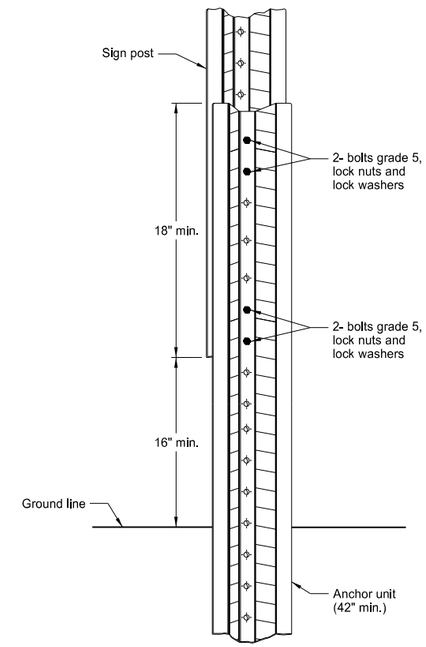

Breakaway U-Channel Splice Detail
Alternate C
(2.5 and 3 lb/ft)

Install a maximum of 3 posts within 7'.

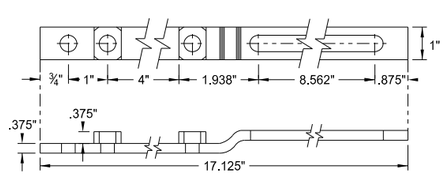

Retainer Strap Detail

Alternate A Steps of Installation:

1. a) Drive anchor unit to within 12" of ground level.
   b) Establish proper assembly by lining up bottom hole of retainer strap with 6th hole from the top of the anchor unit.
   c) Assemble strap to back of anchor unit using 5/16"x2" bolt, lock washer and nut.
   d) Rotate strap 90° to left.
2. a) Drive anchor unit to 4" above ground.
   b) Rotate strap to vertical position.
3. a) Place 5/16"x2" bolt, lock washer and nut in bottom of sign post to facilitate alignment of sign post with proper hole in anchor unit.
   b) Alternately tighten two connector bolts.
4. Complete assembly by tightening 5/16"x2" bolt (this fastens sign post to retainer strap).
5. Properly nest base post, strap, and sign post. Proper nesting occurs when all flat surfaces of the base post, strap, and sign post at the bolts have full contact across the entire width.

NORTH DAKOTA DEPARTMENT OF TRANSPORTATION	
2-28-14	
REVISIONS	
DATE	CHANGE
9-27-17	Updated to active voice

This document was originally issued and sealed by Roger Weigel, Registration Number PE- 2930, on 9/27/2017 and the original document is stored at the North Dakota Department of Transportation

CONSTRUCTION SIGN DETAILS
TERMINAL AND GUIDE SIGNS

D-704-9

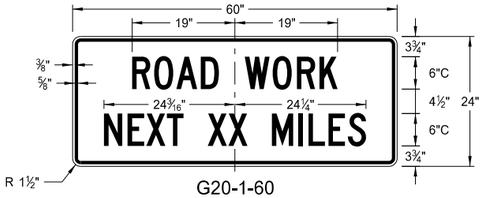

G20-1-60
Legend: black (non-refl)
Background: orange

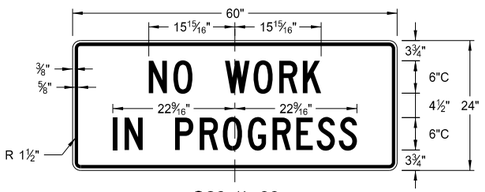

G20-1b-60
Legend: black (non-refl)
Background: orange

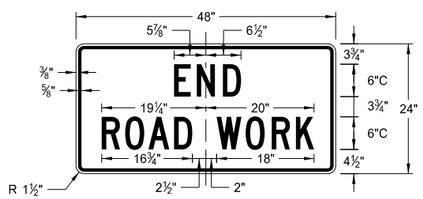

G20-2-48
Legend: black (non-refl)
Background: orange

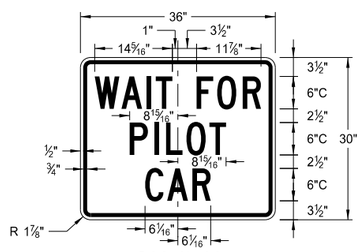

G20-4b-36
Legend: black (non-refl)
Background: orange

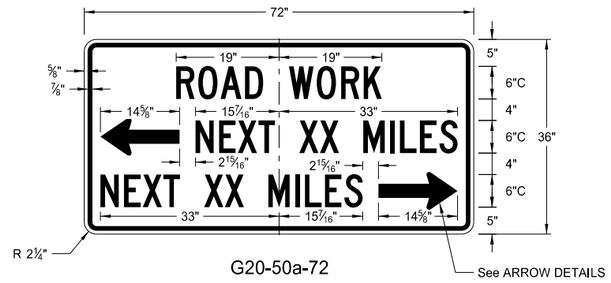

G20-50a-72
Legend: black (non-refl)
Background: orange

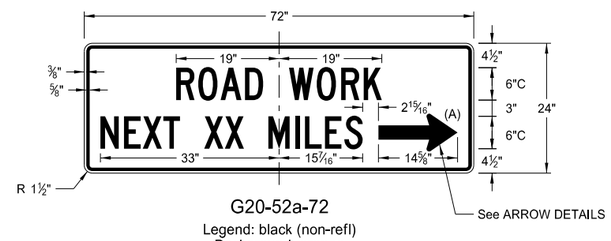

G20-52a-72
Legend: black (non-refl)
Background: orange

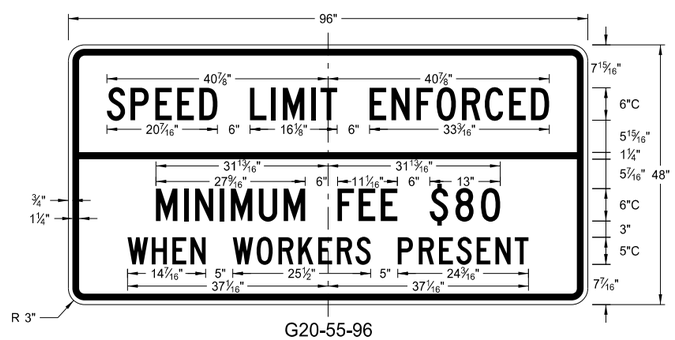

G20-55-96
Legend: black (non-refl)
Background: orange

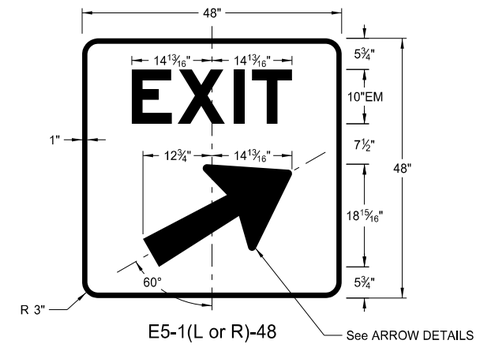

E5-1(L or R)-48
Legend: white
Background: green (orange optional)

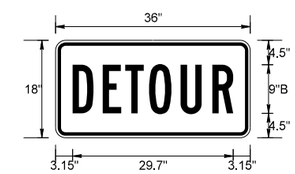

M4-8-36
Legend: black (non-refl)
Background: orange

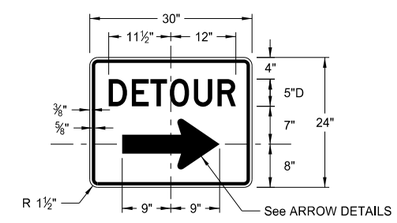

M4-9(L or R)-30 &
M4-9-30
Legend: black (non-refl)
Background: orange

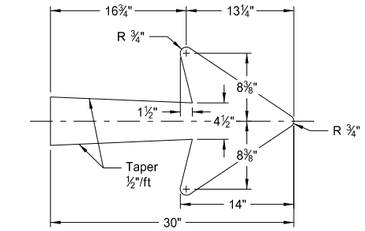

E5-1-48

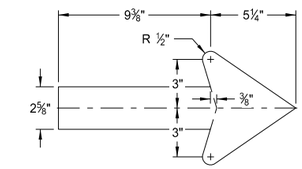

G20-50a-72
G20-52a-72

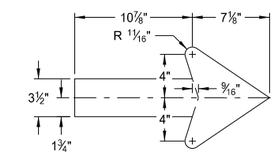

M4-9(L or R)-30
Right or Left

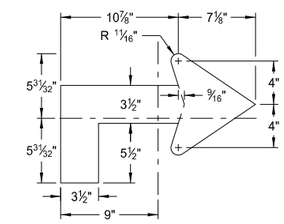

M4-9(L or R)-30
Advanced Right or Left

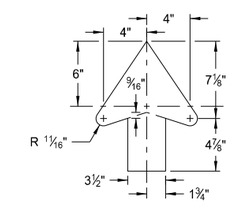

M4-9-30
Straight

ARROW DETAILS

NOTES:

(A) Arrow may be right or left of the legend to indicate construction to the right or left.

NORTH DAKOTA DEPARTMENT OF TRANSPORTATION	
8-13-13	
REVISIONS	
DATE	CHANGE
8-17-17	Added sign & background color

This document was originally issued and sealed by Roger Weigel, Registration Number PE- 2930, on 8/17/17 and the original document is stored at the North Dakota Department of Transportation

CONSTRUCTION SIGN DETAILS
REGULATORY SIGNS

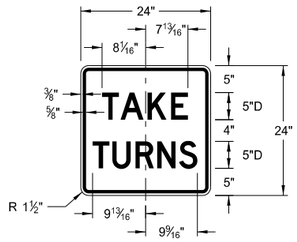

R1-50P-24
Legend: black (non-refl)
Background: white

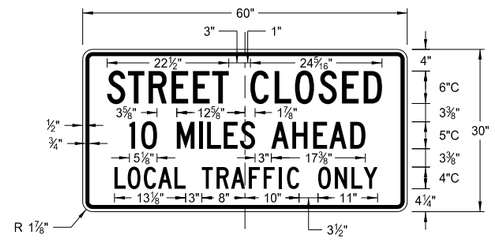

R11-3c-60
Legend: black (non-refl)
Background: white

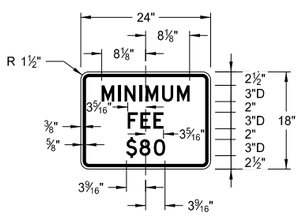

R2-1aP-24
Legend: black (non-refl)
Background: white

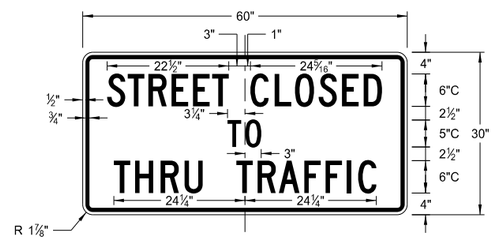

R11-4a-60
Legend: black (non-refl)
Background: white

R11-2a-48
Legend: black (non-refl)
Background: white

NORTH DAKOTA DEPARTMENT OF TRANSPORTATION	
8-13-13	
REVISIONS	
DATE	CHANGE
8-17-17	Revised sign number

This document was originally issued and sealed by Roger Weigel, Registration Number PE-2930, on 8/17/17 and the original document is stored at the North Dakota Department of Transportation

D-704-11

CONSTRUCTION SIGN DETAILS
WARNING SIGNS

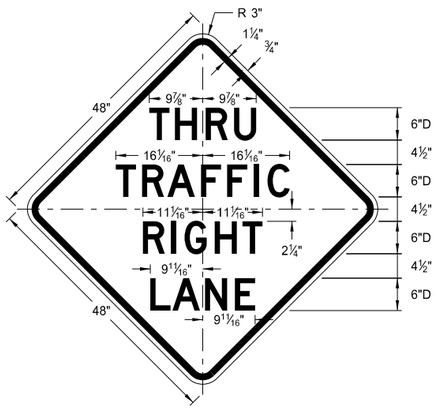

W5-8-48
Legend: black (non-refl)
Background: orange

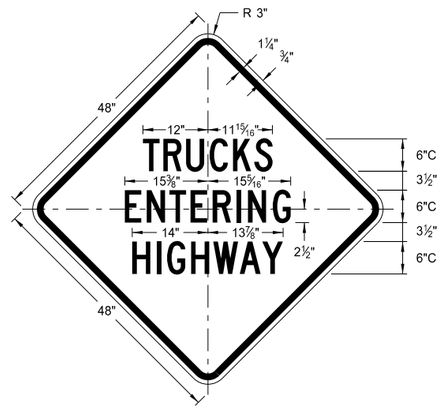

W8-53-48
Legend: black (non-refl)
Background: orange

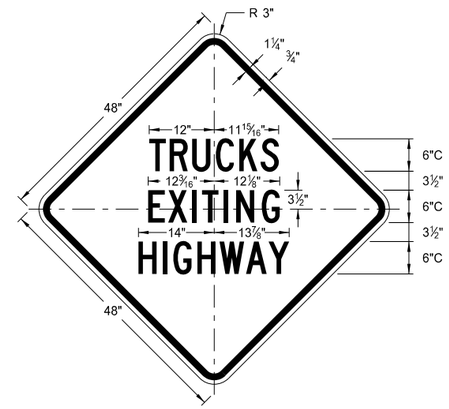

W8-56-48
Legend: black (non-refl)
Background: orange

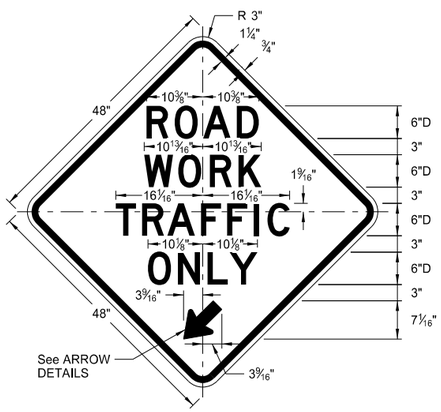

W5-9-48
Legend: black (non-refl)
Background: orange

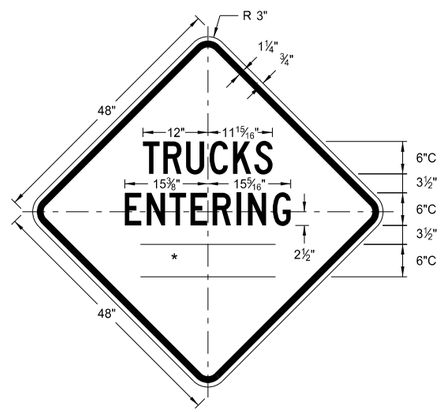

W8-54-48
Legend: black (non-refl)
Background: orange

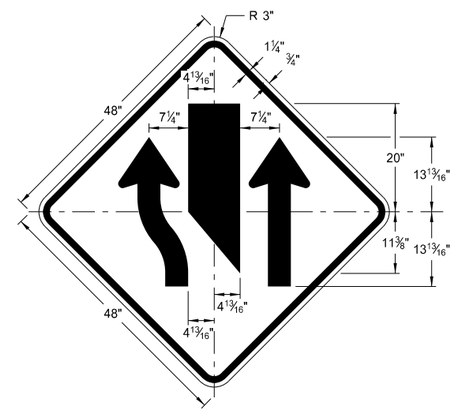

W9-3a-48
Legend: black (non-refl)
Background: orange

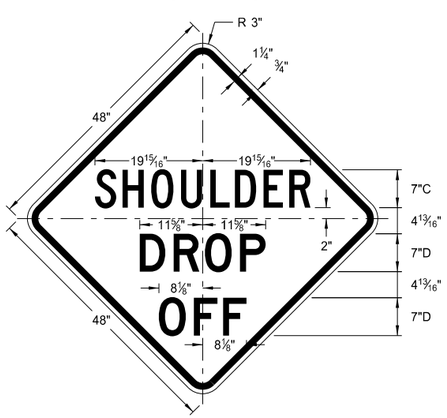

W8-9a-48
Legend: black (non-refl)
Background: orange

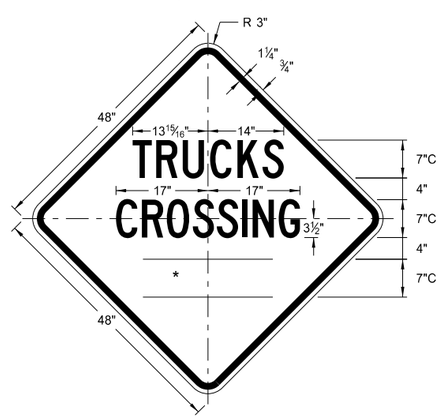

W8-55-48
Legend: black (non-refl)
Background: orange

WORD	LETTER SPACING
AHEAD	Standard
200 FT	Standard
350 FT	Standard
500 FT	Standard
1000 FT	Reduce 40%
1500 FT	Reduce 40%
½ MILE	Reduce 50%
1 MILE	Standard

* DISTANCE MESSAGES

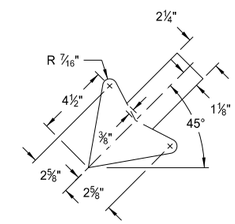

W5-9-48

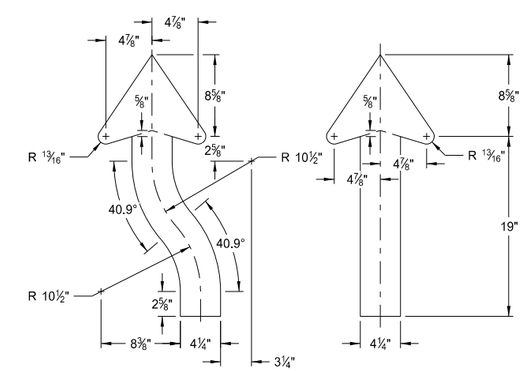

W9-3a-48

ARROW DETAILS

NORTH DAKOTA DEPARTMENT OF TRANSPORTATION	
8-13-13	
REVISIONS	
DATE	CHANGE
8-17-17	Updated sign number
5-31-18	Revised sign and arrow details

This document was originally issued and sealed by Roger Weigel, Registration Number PE- 2930, on 5/31/18 and the original document is stored at the North Dakota Department of Transportation

CONSTRUCTION SIGN DETAILS
WARNING SIGNS

D-704-11A

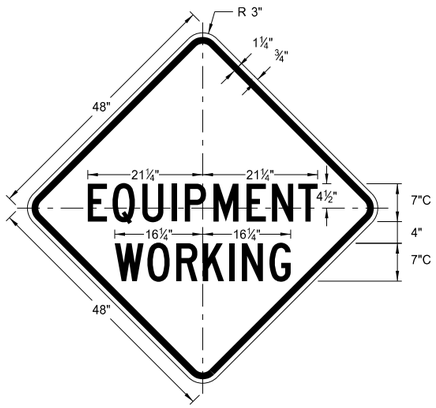

W20-51-48
Legend: black (non-refl)
Background: orange

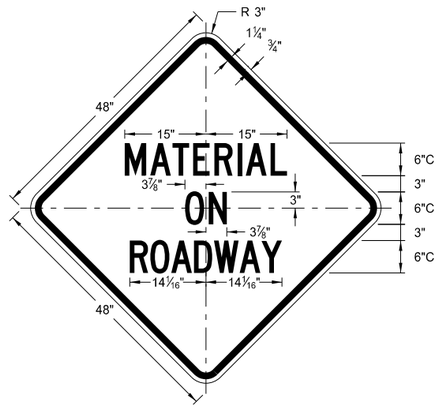

W21-51-48
Legend: black (non-refl)
Background: orange

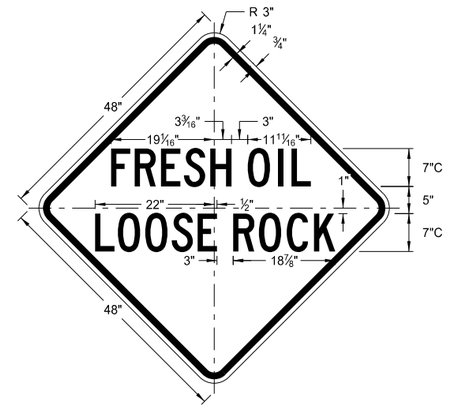

W22-8-48
Legend: black (non-refl)
Background: orange

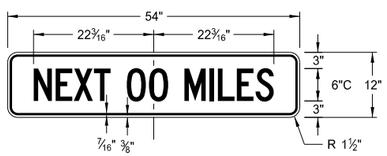

W20-52P-54
Legend: black (non-refl)
Background: orange

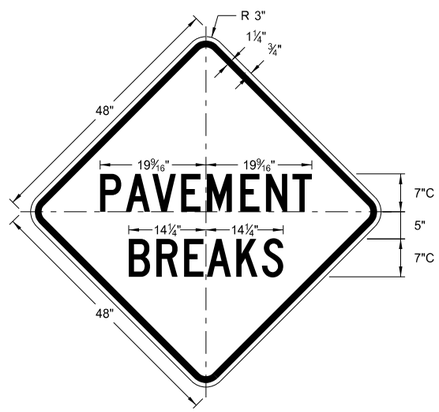

W21-52-48
Legend: black (non-refl)
Background: orange

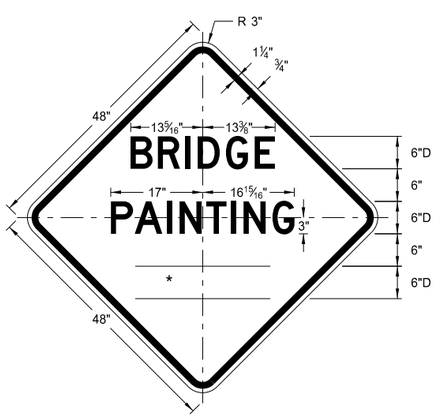

W21-50-48
Legend: black (non-refl)
Background: orange

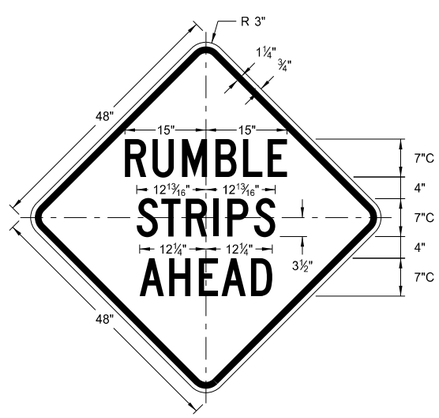

W21-53-48
Legend: black (non-refl)
Background: orange

WORD	LETTER SPACING
AHEAD	Standard
200 FT	Standard
350 FT	Standard
500 FT	Standard
1000 FT	Reduce 40%
1500 FT	Reduce 40%
½ MILE	Reduce 50%
1 MILE	Standard

* DISTANCE MESSAGES

NORTH DAKOTA DEPARTMENT OF TRANSPORTATION	
5-31-18	
REVISIONS	
DATE	CHANGE

This document was originally issued and sealed by Roger Weigel, Registration Number PE- 2930, on 5/31/18 and the original document is stored at the North Dakota Department of Transportation

SHOULDER CLOSURE TAPERS

D-704-12

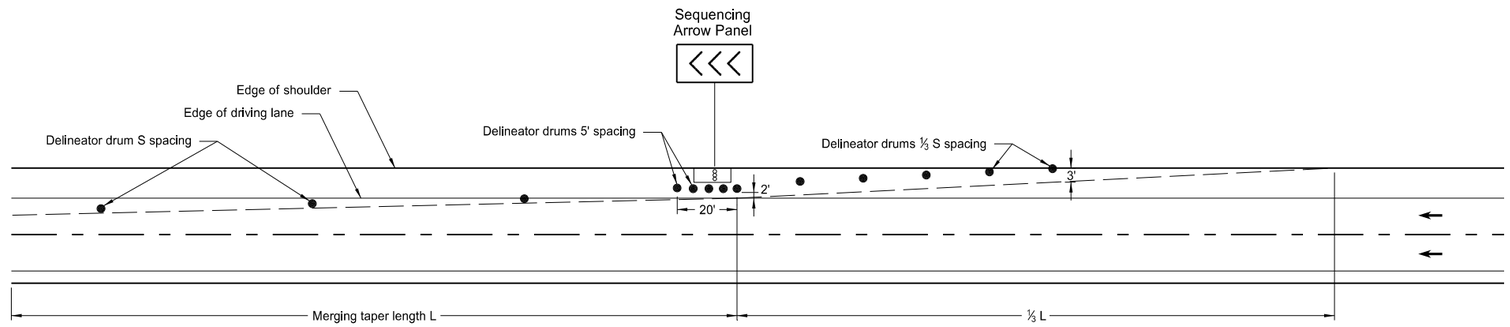

SHOULDER CLOSURE WITH LANE CLOSURE
(when shoulder is 8' or wider)

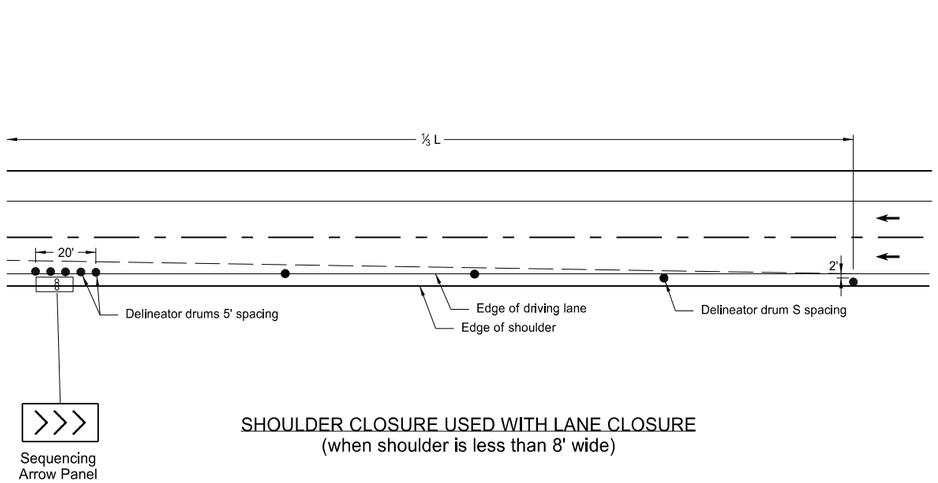

SHOULDER CLOSURE USED WITH LANE CLOSURE
(when shoulder is less than 8' wide)

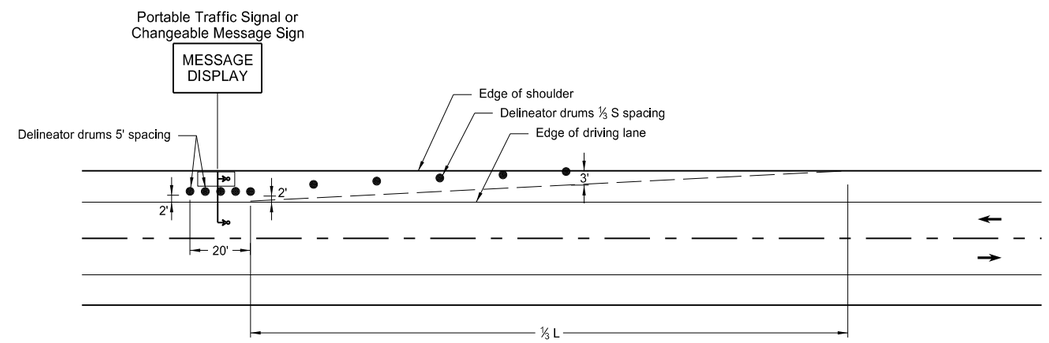

PORTABLE TRAFFIC SIGNAL OR CHANGEABLE MESSAGE SIGN ON SHOULDER

KEY			
●	Delineator Drum	∞	Sequencing Arrow Panel
∘	Message Display		Portable Traffic Signal

Notes:

1. S = Posted Speed Limit in mph
   W = Width of offset in feet
   L = Taper length in feet
   $L = WS^2/60$ (40mph or less)
   L = WS (45mph or more)

2. If a shoulder taper is used, use a length of approximately ⅓L. If a shoulder is used as a travel lane, use a normal merging or shifting taper.

3. When paved shoulders of 8 foot width or more are closed, use channelizing devices to close shoulder in advance, to delineate beginning of work space, and to direct vehicular traffic to remain within the traveled way.

NORTH DAKOTA DEPARTMENT OF TRANSPORTATION	
10-3-13	
REVISIONS	
DATE	CHANGE
9-27-17	Updated to active voice

This document was originally issued and sealed by Roger Weigel Registration Number PE- 2930, on 9/27/2017 and the original document is stored at the North Dakota Department of Transportation

BARRICADE AND CHANNELIZING DEVICE DETAILS

D-704-13

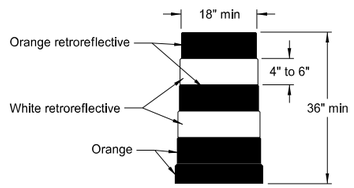

DELINEATOR DRUM

Provide horizontal, circumferential, alternating orange and white retroreflective stripes 4" to 6" wide for drum markings. Use a minimum of two orange and two white stripes with the top stripe being orange for each drum. Do not exceed 3" nonretroreflectorized spaces between the horizontal orange and white stripes. Avoid placement of stripes on drum ribs or indentations. Use closed top drums that will not allow collection of debris. Do not place ballast on the top of drum.

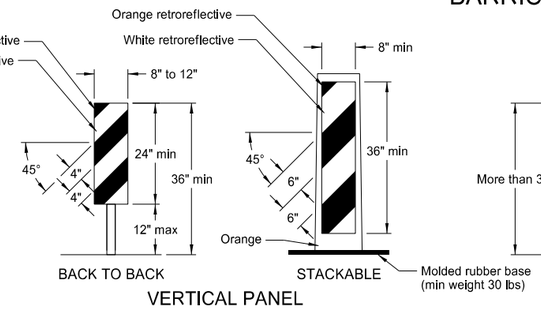

VERTICAL PANEL

Provide alternating orange and white retroreflective stripes, sloping downward in direction vehicular traffic is to pass. Place retroreflective sheeting on both sides of panel with a minimum of 270 square inches of retroreflective area facing vehicular traffic. Where the height of the retroreflective material on the vertical panel is 36 inches or more, use a stripe width of 6 inches.

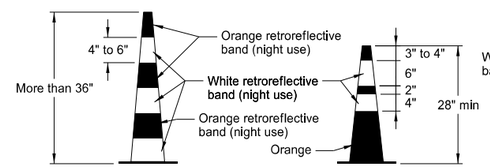

TRAFFIC CONE

Provide retroreflectorization of cones more than 36" in height by alternating orange and white retroreflective stripes. Use a minimum of two orange and two white stripes for each cone with the top stripe being orange. Use maximum 3" nonretroreflectorized space between the orange and white stripes.

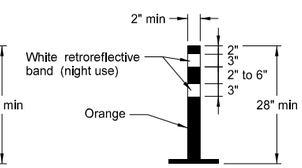

TUBULAR MARKER

Provide retroreflectorization of tubular markers more than 42" in height by alternating four 4" to 6" wide orange and white stripes with the top stripe being orange.

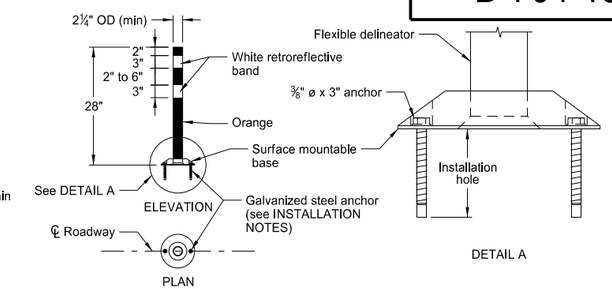

FLEXIBLE DELINEATOR

INSTALLATION NOTES:

1. Drill installation holes to diameter and depth required by manufacturer's specifications.
2. For removal, remove anchors and fill installation hole with an epoxy designed to bond to pavement surface.
3. In lieu of bolted down base, use an 8" x 8" butyl pad or hot melt butyl. Remove butyl as close as possible to pavement surface.

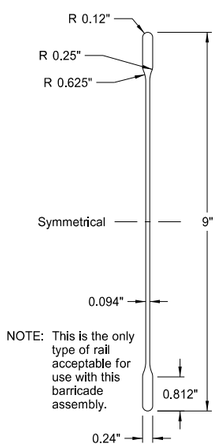

NOTE: This is the only type of rail acceptable for use with this barricade assembly.

BARRICADE BLADE DETAIL

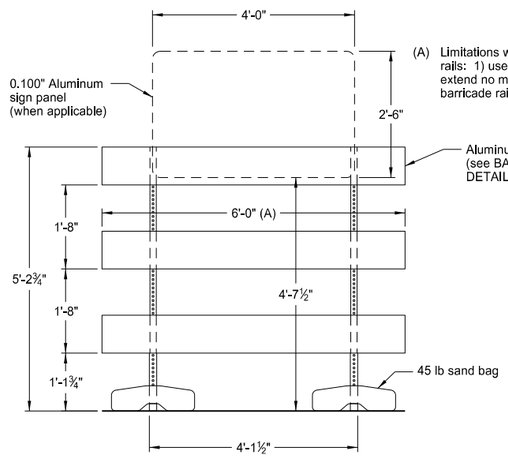

(A) Limitations when using 8'-0" barricade rails: 1) use no sign panel, and 2) extend no more than 1'-0" of the barricade rail past the uprights.

ELEVATION VIEW

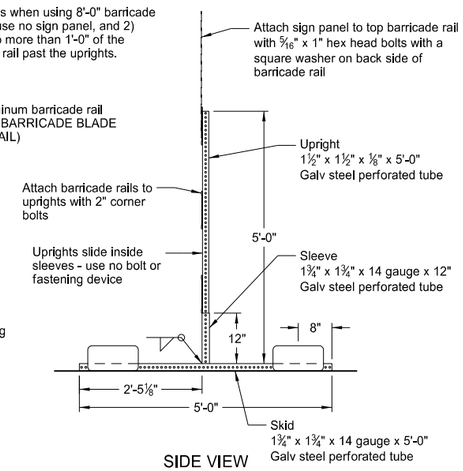

SIDE VIEW

BARRICADE ASSEMBLY DETAIL
(Aluminum Barricade Rails)

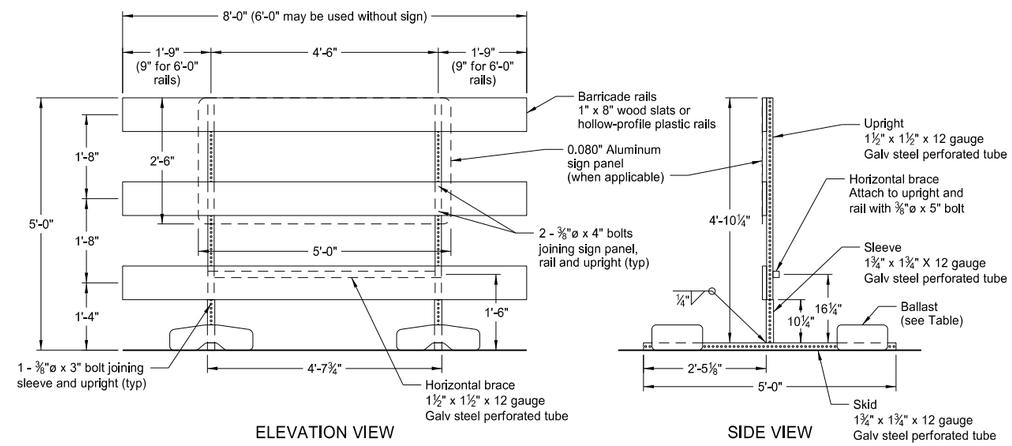

ELEVATION VIEW

SIDE VIEW

BARRICADE ASSEMBLY DETAIL
(Wood or Plastic Rails)

NOTE: For barricade markings use alternating orange and white retroreflective stripes, sloping downward in the direction traffic is to pass. Place retroreflective sheeting on both sides of the rails with a minimum of 270 square inches of visible retroreflective area facing vehicular traffic. When the barricade length is less than 36", use a rail stripe width of 4".

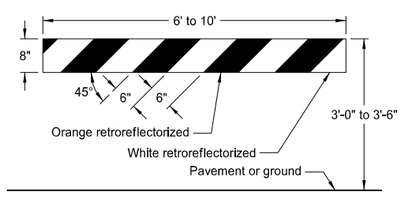

TYPE I BARRICADE

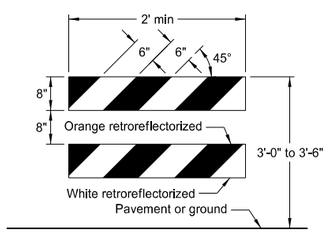

TYPE II BARRICADE

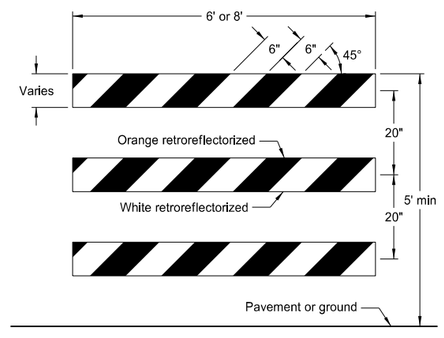

TYPE III BARRICADE

BARRICADE RAIL DETAILS

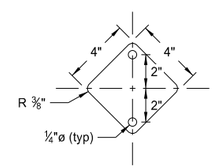

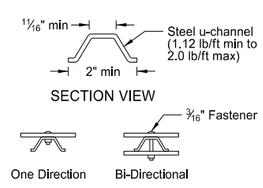

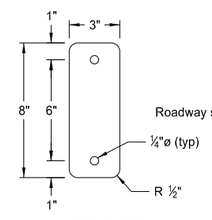

REFLECTOR DETAIL

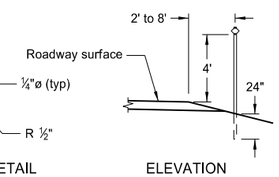

ELEVATION

DELINEATORS

MINIMUM BALLAST
(For each side of barricade support)

Without Sign	4 - 25 lb sandbags
With Sign	6 - 25 lb sandbags

Note: Number of sandbags based on a wind speed of 55 MPH. Sandbags assumed to be placed at or near the ends of the skids.

NORTH DAKOTA DEPARTMENT OF TRANSPORTATION	
10-3-13	
REVISIONS	
DATE	CHANGE
9-27-17	Updated to active voice

This document was originally issued and sealed by Roger Weigel, Registration Number PE- 2930, on 9/27/2017 and the original document is stored at the North Dakota Department of Transportation

CONSTRUCTION SIGN PUNCHING AND MOUNTING DETAILS

D-704-14

Note: In curb sections, place signs a minimum horizontal distance of 2' from face of the curb to near edge of the sign.

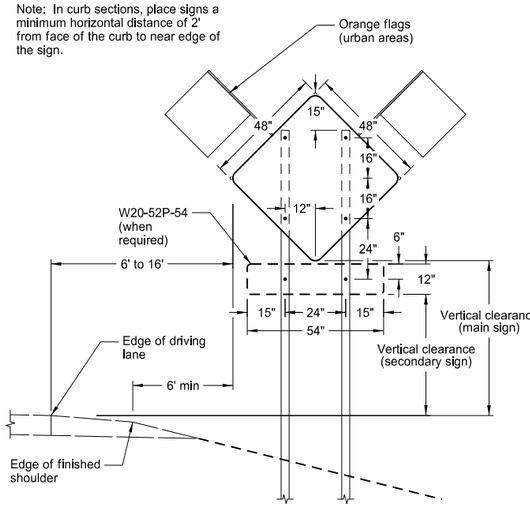

TYPICAL SECTION
(48" x 48" diamond warning sign shown)

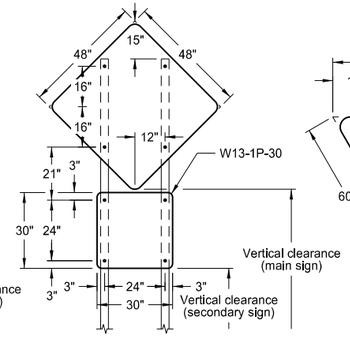

48" x 48" DIAMOND SIGN
(with 30" x 30" secondary sign)

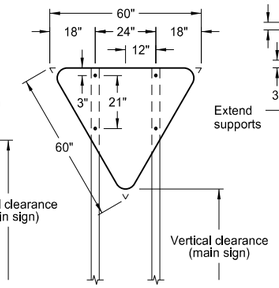

R1-2-60 - YIELD SIGN

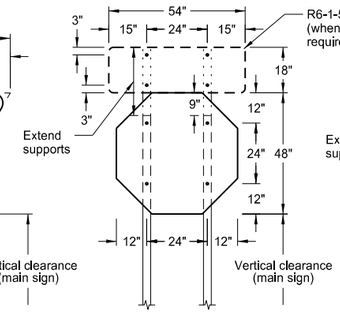

R1-1-48 - STOP SIGN
(with R6-1-54 sign as required)

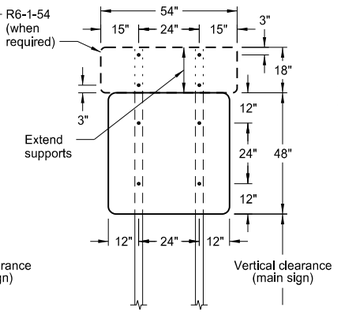

48" x 48" SIGN
(with R6-1-54 sign as required)

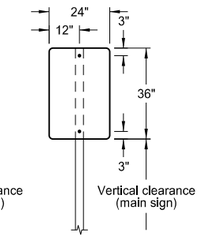

24" x 36" SIGN

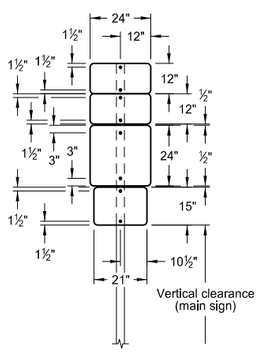

24" x 24"
ROUTE MARKER
ASSEMBLY

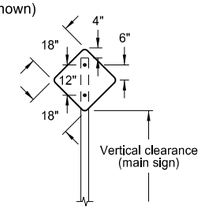

18" x 18"
DIAMOND SIGN

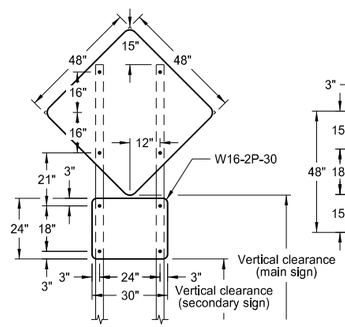

48" x 48" DIAMOND SIGN
(with 30" x 24" secondary sign)

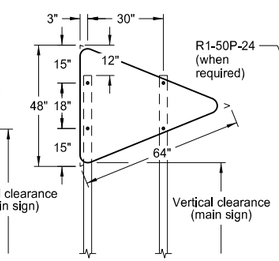

W14-3-64 - PENNANT SIGN

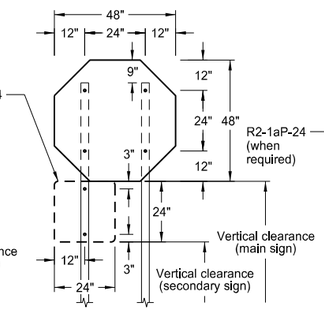

R1-1-48 - STOP SIGN
(with R1-50P-24 sign as required)

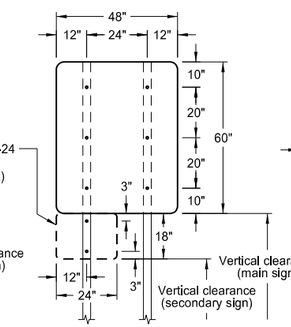

48" x 48" SIGN
(with R2-1aP-24 sign as required)

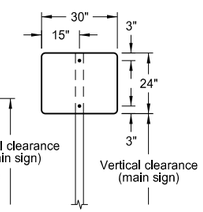

30" x 24" SIGN

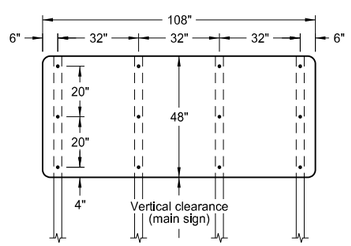

108" x 48" SIGN

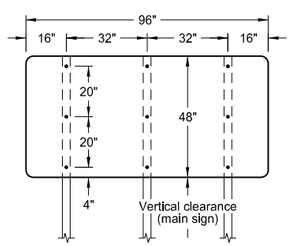

96" x 48" SIGN

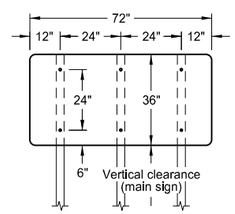

72" x 36" SIGN

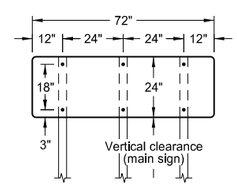

72" x 24" SIGN

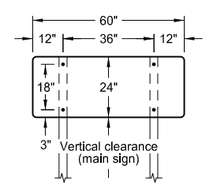

60" x 24" SIGN

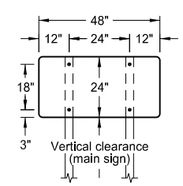

48" x 24" SIGN

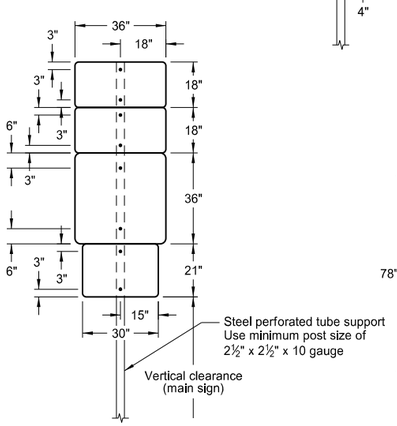

36" x 36"
ROUTE MARKER
ASSEMBLY

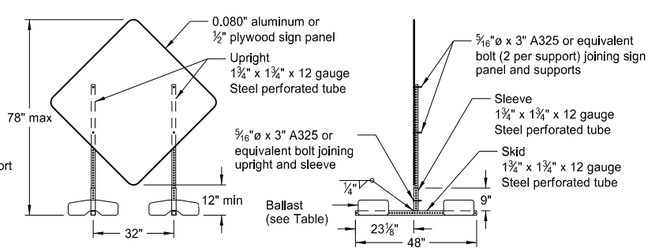

PORTABLE SIGN SUPPORT
LOW-MOUNTING HEIGHT

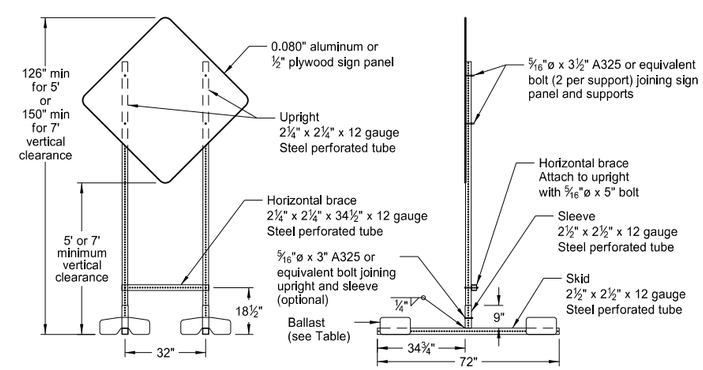

PORTABLE SIGN SUPPORT
HIGH-MOUNTING HEIGHT

NOTES:

1. Sign Supports: Galvanize or paint supports. Minimum post sizes are 2.5 lb/ft u-channel or 2" x 2" x 12 gauge steel perforated tube, except where noted. When installing signs on u-channel, minimum post size for assemblies containing a secondary sign is 3.0 lb/ft. Post sizes based on a wind speed of 55 MPH.

   Place signs over 50 square feet on 2½" x 2½" perforated tube supports as a minimum.

   Do not attach guy wires to sign supports. Attach wind beams behind sign panels when used with u-posts.

2. Sign Panels: Provide sign panels made of 0.100" aluminum, ½" plywood, or other approved material, except where noted. Punch all holes round for ⅜" bolts.

3. Alternate Messages: Install and remove alternate message signs on reflectorized plate (without borders) as required. (i.e. "Left" and "Right" message on lane closure sign)

4. Route Marker Auxiliary Signs: Provide route marker auxiliary signs, such as the cardinal direction and directional arrows, with a background and legend that match the route marker they are used with:

   Interstate - white legend on blue background
   Interstate Business Loop - white legend on green background
   US and State - black legend on white background
   County - yellow legend on blue background

5. Vertical Clearance: Install signs with a vertical clearance of 5'-0" (see TYPICAL SECTION.) In areas where parking or pedestrian movements are likely or the view of the sign may be obstructed, install signs with a vertical clearance of 7'-0" from the top of the curb or from the near edge of the driving lane in absence of a curb.

   The vertical clearance to secondary signs is 1'-0" less than the vertical clearance stated above.

   Provide a minimum clearance of 7'-0" from the ground at the post for signs with an area exceeding 50 square feet.

6. Portable Signs: Provide portable signs that meet the vertical clearance stated above when it is necessary to place signs within the pavement surface.

   Use of low-mounting height (minimum 12" vertical clearance) portable signs for 5 days or less, is allowed as long as the view of the sign is not obstructed. Time delays caused by unforseen circumstances, such as equipment breakdown, rain, subgrade failures, etc., will not accrue towards the 5 day period. Use of R9-8 through R9-11a series, W1-6 through W1-8 series, M4-10, and E5-1 is allowed for longer than 5 days.

   Restrict signs mounted on portable sign supports shown in the LOW-MOUNTING HEIGHT and HIGH-MOUNTING HEIGHT details to a maximum surface area of 16 square feet.

MINIMUM BALLAST
(For each side of sign support base)

Sign Panel Mounting Height (ft)	Number of 25 lb sandbags for 4' x 4' sign panel
1'	6
5'	8
7'	10

Note: The number of sandbags are based on a wind speed of 55 MPH. Place sandbags at or near the ends of skids.

NORTH DAKOTA DEPARTMENT OF TRANSPORTATION	
10-4-13	
REVISIONS	
DATE	CHANGE
11-14-13	Revised Note 6.
9-27-17	Updated to active voice

This document was originally issued and sealed by Roger Weigel, Registration Number PE- 2930, on 9/27/2017 and the original document is stored at the North Dakota Department of Transportation

SHOULDER CLOSURES AND BRIDGE PAINTING LAYOUTS

D-704-24

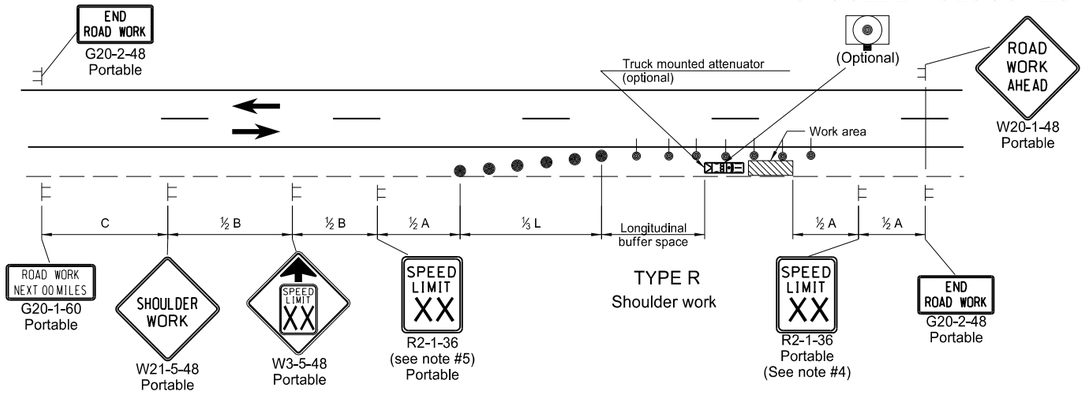

TYPE R
Shoulder work

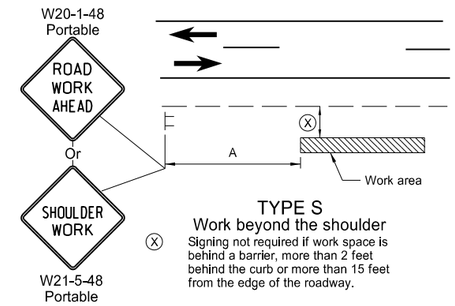

TYPE S
Work beyond the shoulder
Signing not required if work space is behind a barrier, more than 2 feet behind the curb or more than 15 feet from the edge of the roadway.

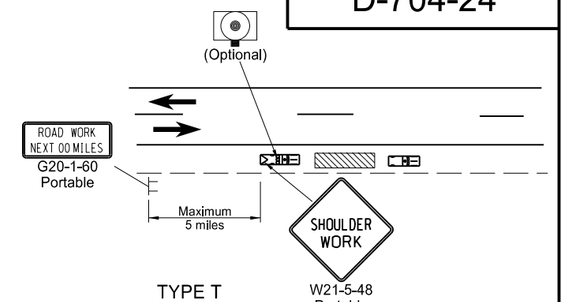

TYPE T
Mobile operation on shoulder

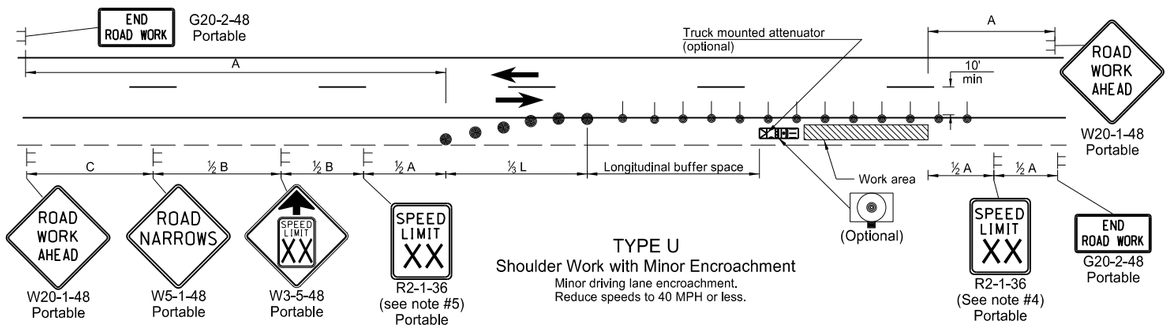

TYPE U
Shoulder Work with Minor Encroachment
Minor driving lane encroachment.
Reduce speeds to 40 MPH or less.

Notes

1. Variables
   S = Numerical value of speed limit or 85th percentile.
   W = The width of the taper in feet.
   L = Minimum length of taper, S x W for freeways, expressways, and all other roads with speeds of 45 mph or greater, or W x S^2 /60 for urban, residential, and other streets with speeds of 40 mph or less.
2. Space delineator drums for tapering traffic at dimension "S". Space delineator drums or tubular markers for tangents at 2 times "S".
3. Sequencing Arrow Panels
   Use Type A on roadways with slow moving traffic speeds and low volume (25 mph or less and 750 ADT or less).
   UseType B on roadways with moderate traffic speeds and volumes (40 mph or less and 5000 ADT or less).
   Use Type C on roadways with high traffic speeds and volumes (over 40 mph or over 5000 ADT).
4. Re-establish speed limit. Determine exact speed limit in the field, dependent on location and conditions.
5. Determine the reduced speed limit based on the in-place speed limit before construction. Where speed reductions exceed 30 MPH, install a second speed limit sign with the desired speed reduction (not to exceed 30 mph.) Place the second speed limit sign at ½B.
6. Install flags on warning signs in urban areas when signs are not portable. Mount 24 inch square flags perpendicular to the edges of the sign, and at such a distance above the edge that the flag does not touch the sign when limp.
7. Cover existing speed limit signs within a reduced speed zone.
8. As an option, use portable sign supports in lieu of post mounted signs in accordance with NDDOT Standard Specifications.
9. Recommend 40 mph speed limit in vicinity of workers, unless location and conditions dictate otherwise.

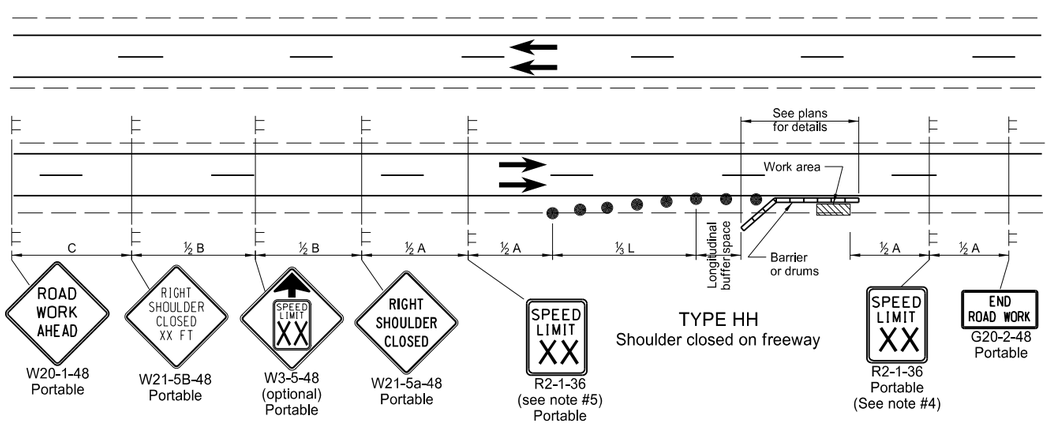

TYPE HH
Shoulder closed on freeway

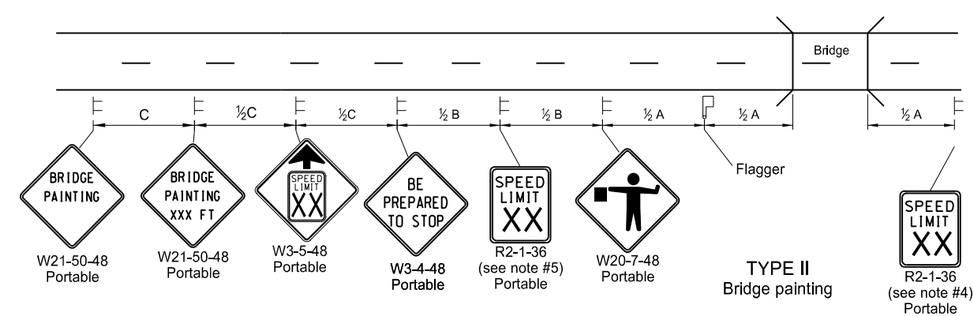

TYPE II
Bridge painting

KEY

Sign	Work area
Delineator Drum	Tubular Marker
Sequencing Arrow Panel (Caution Mode)	

ADVANCE WARNING SIGN SPACING

Road Type	Distance Between Signs Min. (ft)		
	A	B	C
Urban - Low Speed (30 mph or less)	150	150	150
Urban - Low Speed (over 30 to 40 mph)	280	280	280
Urban - High Speed (over 40 mph to 50 mph)	360	360	360
Rural - High Speed (over 50 mph to 65 mph)	720	720	720
Urban Expressway and Freeway (55 mph to 60 mph)	850	1350	2200
Rural Expressway and Freeway (70 mph to 75 mph)	1000	1500	2640
Interstate/4-Lane Divided (Maintenance and Surveying)	750	1000	1500

Longitudinal Buffer Space

Speed (mph)	Length Min (feet)
20	115
25	155
30	200
35	250
40	305
45	360
50	425
55	495
60	570
65	645
70	730
75	820

NORTH DAKOTA DEPARTMENT OF TRANSPORTATION

9-27-13

REVISIONS

DATE	CHANGE
8-17-17	Updated notes & revised signs

This document was originally issued and sealed by Roger Weigel Registration Number PE- 2930, on 08/17/17 and the original document is stored at the North Dakota Department of Transportation

SIGN LAYOUT FOR ONE LANE CLOSURE

D-704-34

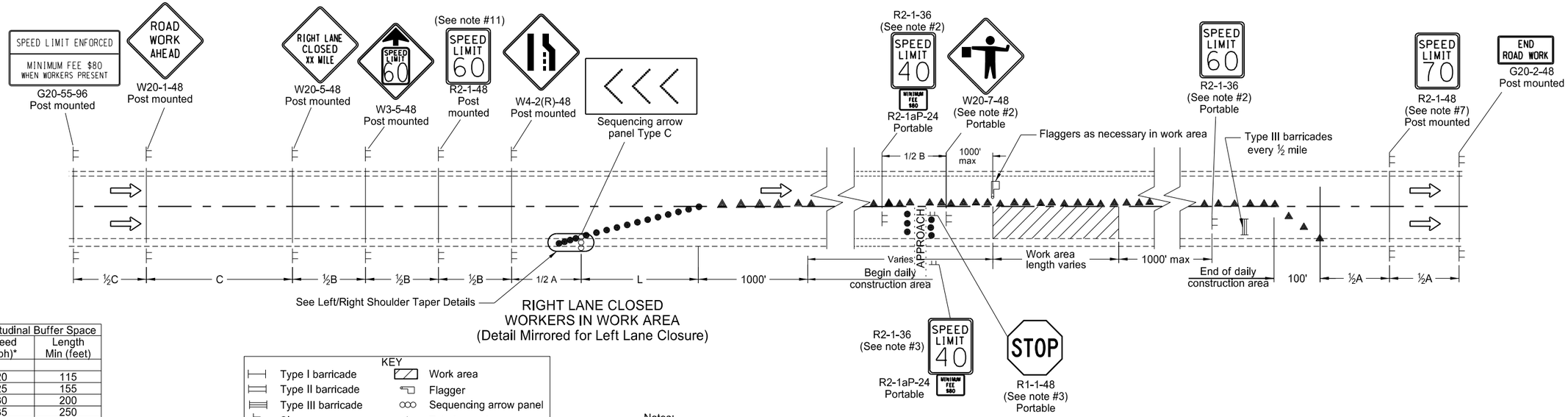

RIGHT LANE CLOSED
WORKERS IN WORK AREA
(Detail Mirrored for Left Lane Closure)

Longitudinal Buffer Space	
Speed (mph)*	Length Min (feet)
20	115
25	155
30	200
35	250
40	305
45	360
50	425
55	495
60	570
65	645
70	730
75	820

*Posted speed, off-peak 85th percentile speed prior to work starting, or the anticipated operating speed in mph.

KEY

- Type I barricade
- Type II barricade
- Type III barricade
- Sign
- Delineator drum
- Work area
- Flagger
- Sequencing arrow panel
- Tubular markers

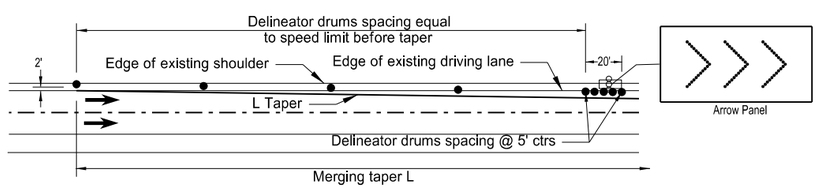

LEFT SHOULDER TAPER DETAIL

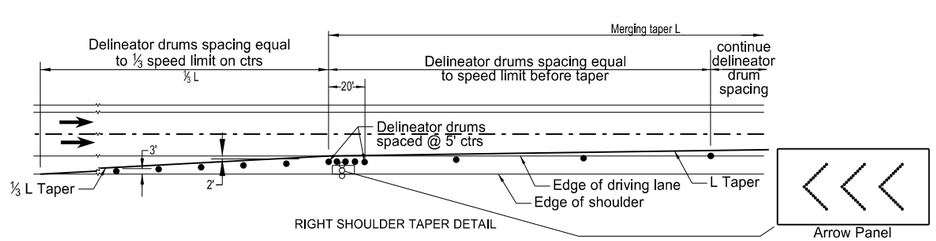

RIGHT SHOULDER TAPER DETAIL

Notes:

1. Install advance signs for flagging when flaggers are flagging.
2. Move the advanced flagger sign and speed limit signs as the work area moves through the construction zone. When the work area is not visible from the flagger, move the flagger station so the work area is visible. Place the 40 mph speed limit sign at ½A in advance of the flagger sign and move the 60 mph speed limit sign. Cover or remove the 40 mph speed limit and the Minimum Fee $80 signs upon completion of the work day or when workers are not present. Determine the exact speed limit in the field, dependent on location and conditions.
3. Approaches: When the work area encompasses an approach, install a 40 mph speed limit sign to control the approach. Cover the existing stop sign and install a new portable stop sign when the approach is on the side of the lane closure. Remove the approach speed limit sign once the main line 40 mph speed zone is moved past the approach.
4. Variables:
   S=Numerical value of speed limit or 85th percentile
   W=The width of taper.
   L=Minimum length of taper, or SxW for freeways, expressways, and all other roads with speeds of 45 mph or greater, or (WxSxS)/60 for urban, residential, and other streets with speeds of 40 mph or less.
5. Space delineator drums for tapering traffic at the dimension "S". Space tubular markers used for tangents at 2 times dimension "S".
6. Place sequencing arrow panels at the beginning of the taper when possible. Where shoulder width does not provide sufficient room, move the panel closer to the work area and place on the roadway surface.
   Use Type A on roadways with slow moving traffic speeds and low volume (25 mph or less and 750 ADT or less).
   Use Type B on roadways with moderate traffic speeds and volumes (40 mph or less and 5000 ADT or less).
   Use Type C on roadways with high traffic speeds and volumes (over 40 mph or over 5000 ADT).
7. Re-establish the speed limit. Determine the exact speed limit in the field, dependent on location and conditions.
8. Cover existing speed limit signs within a reduced speed zone.
9. Install flags on warning signs in urban areas when signs are not portable. Mount 24 inch square flags perpendicular to the edges of the diamond sign, and at such a distance above the edge that the flag does not touch the sign when limp.
10. Determine the reduced speed limit dependent on the in place speed limit before construction. Where speed limits are to be reduced more than 30 mph, install a second speed limit sign with the desired speed reduction (not to exceed 30 mph.) Place the second speed limit sign at ½B.
11. As an option use portable sign supports in lieu of post mounted signs in accordance with NDDOT Standard Specifications.
12. Sign G20-55-96 is not required if this standard is part of other traffic control layouts or the work is less than 15 days.

ADVANCE WARNING SIGN SPACING			
Road Type	Distance Between Signs Min (ft)		
	A	B	C
Urban - Low Speed (30 mph or less)	150	150	150
Urban - Low Speed (over 30 to 40 mph)	280	280	280
Urban - High Speed (over 40 mph to 50 mph)	360	360	360
Rural - High Speed (over 50 mph to 65 mph)	720	720	720
Urban Expressway and Freeway (55 mph to 60 mph)	850	1350	2200
Rural Expressway and Freeway (70 mph to 75 mph)	1000	1500	2640
Interstate/4-Lane Divided (Maintenance and Surveying)	750	1000	1500

NORTH DAKOTA DEPARTMENT OF TRANSPORTATION

9-26-2012

REVISIONS

DATE	CHANGE
3-15-16	Removed Do Not Pass signs and updated notes
8-17-17	Updated notes & sign nos. & moved Speed Limit signs

This document was originally issued and sealed by Roger Weigel, Registration Number PE- 2930, on 08/17/2017 and the original document is stored at the North Dakota Department of Transportation

SIGN LAYOUT FOR ONE LANE CLOSURE
INTERSTATE SYSTEM

D-704-35

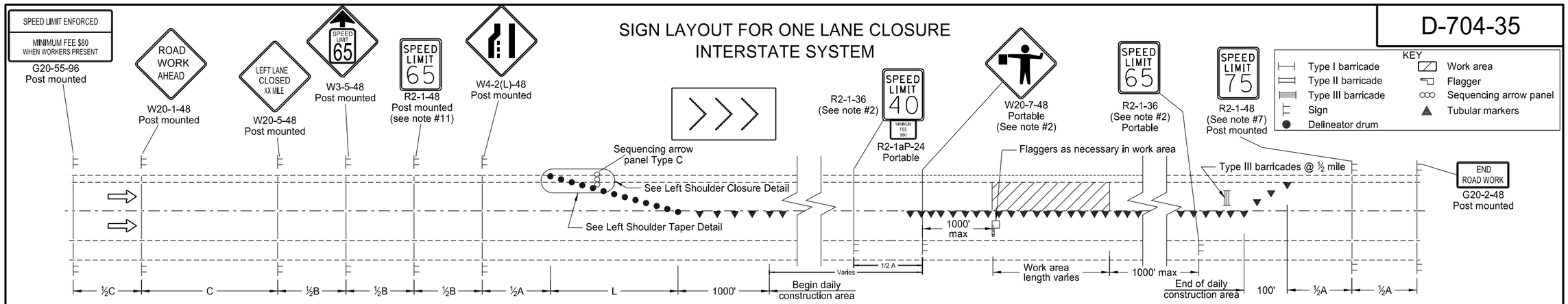

LEFT LANE CLOSED WORKERS IN WORK AREA

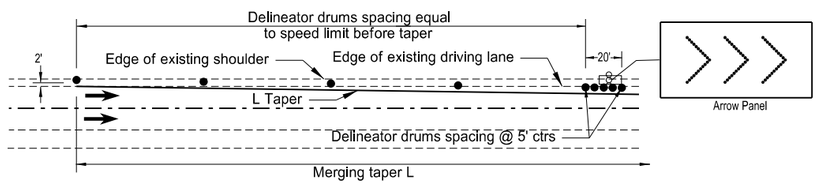

LEFT SHOULDER TAPER DETAIL

ADVANCE WARNING SIGN SPACING			
Road Type	Distance Between Signs Min (ft)		
	A	B	C
Rural - High Speed (over 50 mph to 65 mph)	720	720	720
Urban Expressway and Freeway (55 mph to 60 mph)	850	1350	2200
Rural Expressway and Freeway (70 mph to 75 mph)	1000	1500	2640
Interstate/4-Lane Divided (Maintenance and Surveying)	750	1000	1500

Longitudinal Buffer Space	
Speed (mph)*	Length Min (feet)
20	115
25	155
30	200
35	250
40	305
45	360
50	425
55	495
60	570
65	645
70	730
75	820

*Posted speed, off-peak 85th percentile speed prior to work starting, or the anticipated operating speed in mph.

Notes:

1. Install advance signs for flagging when flaggers are flagging.
2. Move the advanced flagger sign and the speed limit signs as the work area moves through the construction zone. When the work area is not visible from the flagger, move the flagger station so the work area is visible. Space the 40 mph speed limit sign at ½A in advance of the flagger sign and move the 65 mph speed limit sign. Cover or remove the 40 mph speed limit and Minimum Fee $80 signs and the 65 mph speed limit sign upon completion of the work day or when workers are not present.
3. RAMPS: When the work area encompasses an entrance ramp, install a 40 mph speed limit sign on the ramp and cover any existing yield sign. Install new yield sign as necessary. Remove the ramp speed limit sign when the main line 40 mph speed zone is moved past the ramp.
4. Variables:
   S=Numerical value of speed limit or 85th percentile
   W=The width of taper.
   L=Minimum length of taper, or SxW for freeways, expressways, and all other roads with speeds of 45 mph or greater, or
   WxSxS/60 for urban, residential, and other streets with speeds of 40 mph or less.
5. Space delineator drums for tapering traffic at the dimension "S". Space tubular markers used for tangents at 2 times dimension "S".
6. Place sequencing arrow panels at the beginning of the taper when possible. Where shoulder width does not provide sufficient room, move the panel closer to the work area and place on the roadway surface.
   Use Type C on roadways with high traffic speeds and volumes (over 40 mph or 5000 ADT or greater).
7. Re-establish the speed limit. Determine the exact speed limit in the field, dependent on location and conditions.
8. Cover existing speed limit signs within a reduced speed zone.
9. Upon approval, the Engineer will measure obliterated or covered pavement marking as Obliteration of Pavement Marking.
10. Install flags on warning signs in urban areas when signs are not portable. Mount 24 inch square flags perpendicular to the edges of the diamond sign, and at such a distance above the edge that the flag does not touch the sign when limp.
11. Determine the reduced speed limit dependent on the in place speed limit before construction. When speed limits are to be reduced more than 30 mph, install a second speed limit sign with the desired speed reduction (not to exceed 30 mph.) Place the second speed limit sign at ½B.
12. As an option, use portable sign supports in lieu of post mounted signs in accordance with NDDOT Standard Specifications.
13. Sign G20-55-96 is not required if this standard is part of other traffic control, or the work is less than 15 days.

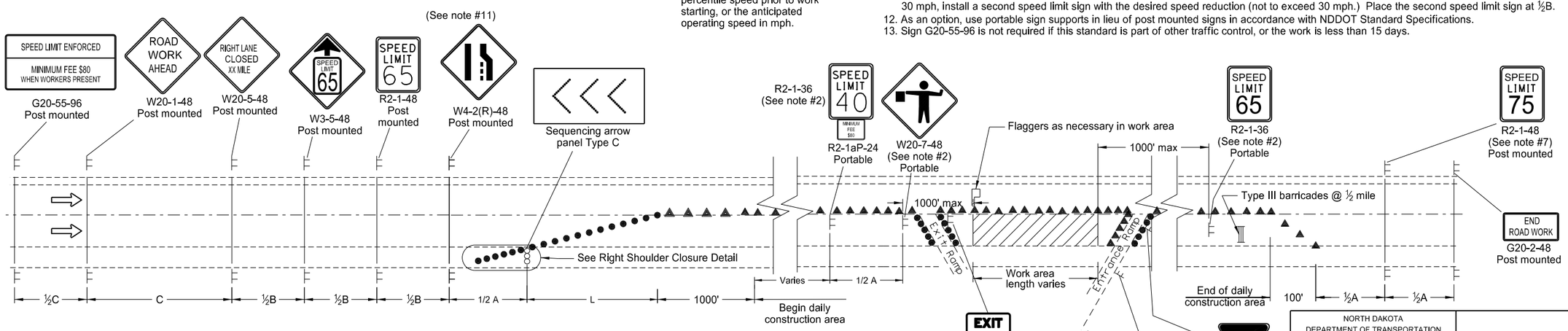

RIGHT LANE CLOSED WORKERS IN WORK AREA

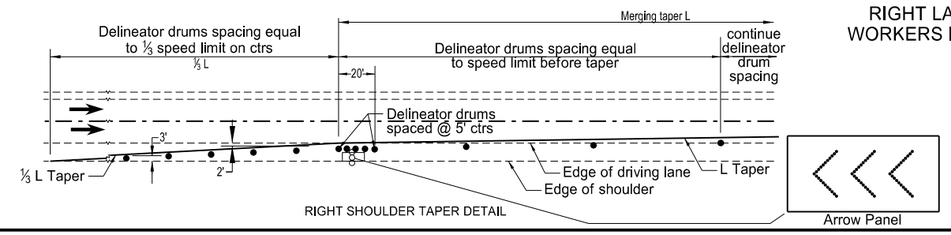

RIGHT SHOULDER TAPER DETAIL

NORTH DAKOTA
DEPARTMENT OF TRANSPORTATION
9-7-2012

REVISIONS

DATE	CHANGE
6/23/2014	Revised Note 12.
3/15/2016	Removed Do Not Pass signs and updated notes.
8/17/2017	Moved speed signs. Added note.
10/17/2017	Corrected spelling of "shoulder".

This document was originally issued and sealed by Roger Weigel, Registration Number PE- 2930, on 10-17-2017 and the original document is stored at the North Dakota Department of Transportation

PORTABLE SIGN SUPPORT ASSEMBLY

D-704-50

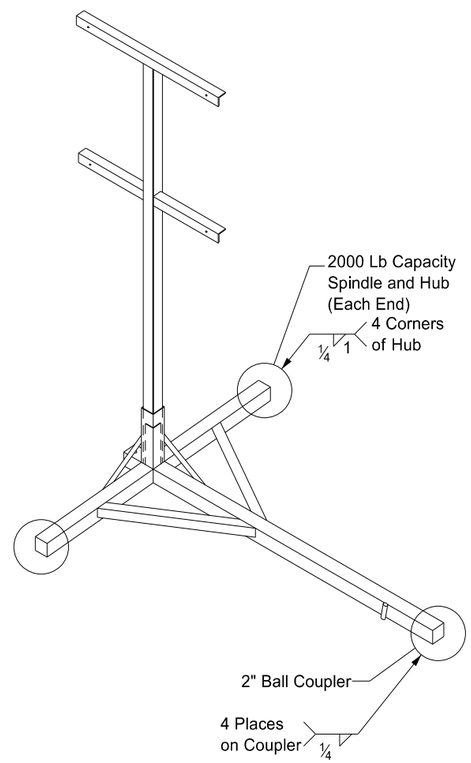

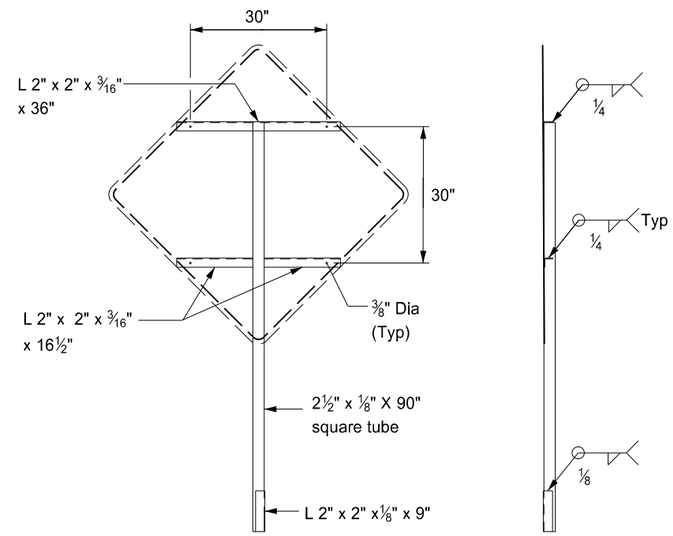

FRONT

RIGHT

SIGN SUPPORT

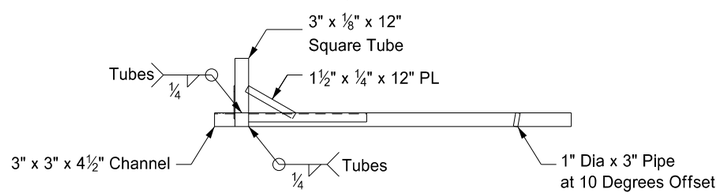

FRONT

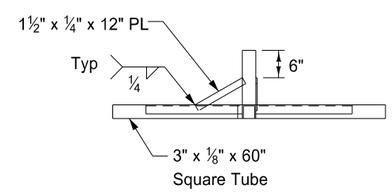

RIGHT

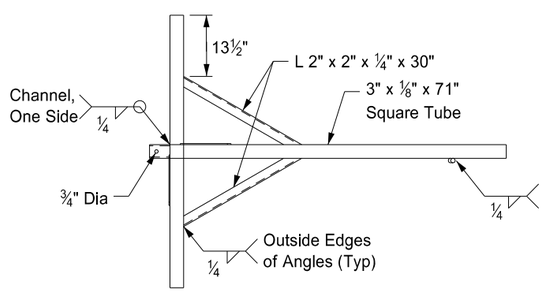

TOP

TRAILER

Notes:

1. The maximum weight of the assembly is 250 pounds.
2. Use a 14" wheel and tire.
3. Automotive and equipment axle assemblies may not be used for trailer-mounted sign supports.
4. Other NCHRP 350 crash tested assemblies are acceptable.

NORTH DAKOTA DEPARTMENT OF TRANSPORTATION	
11-23-10	
REVISIONS	
DATE	CHANGE

This document was originally issued and sealed by Roger Weigel Registration Number PE- 2930 , on 11/23/10 and the original document is stored at the North Dakota Department of Transportation

CONCRETE FOUNDATIONS
(TRAFFIC SIGNALS & HIGHWAY LIGHTING)

D-770-1

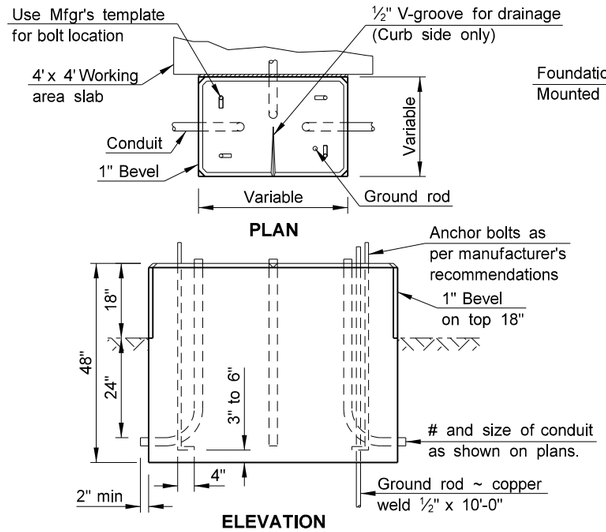

PLAN

ELEVATION

CONTROLLER CABINET FOUNDATION PAD MOUNT

The Controller Cabinet Foundation shall be bid as Concrete Foundation - Traffic Signals.

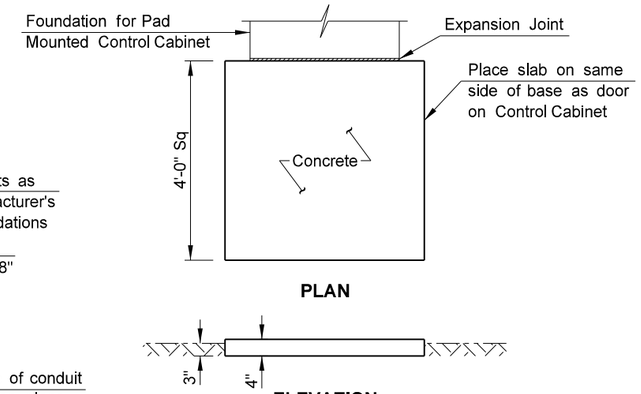

PLAN

ELEVATION

WORKING AREA SLAB

The Working Area Slab shall be installed where shown on the plans and shall not be bid separately but shall be included in the price bid for Concrete Foundation - Traffic Signals.

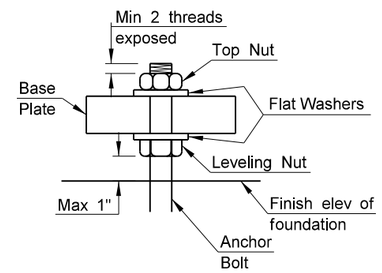

ANCHOR BOLT DETAIL

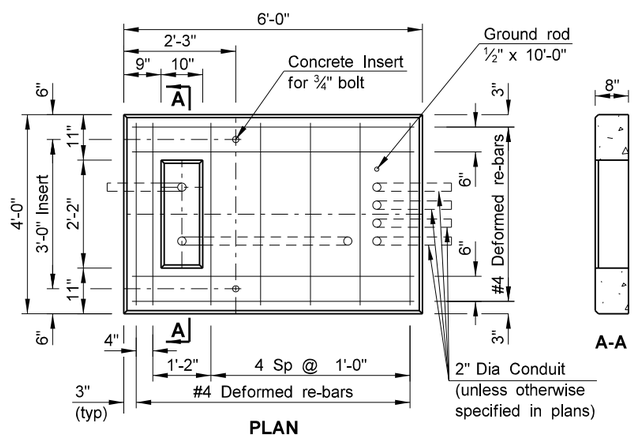

PLAN

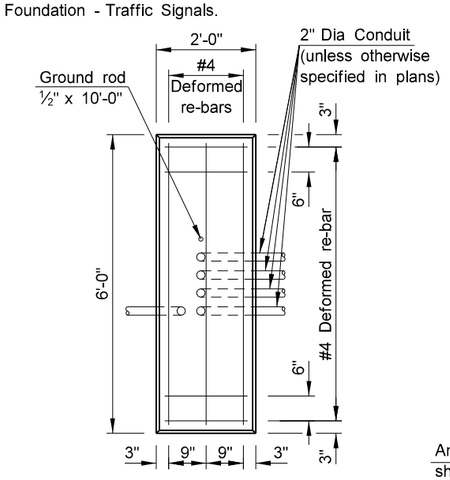

PLAN

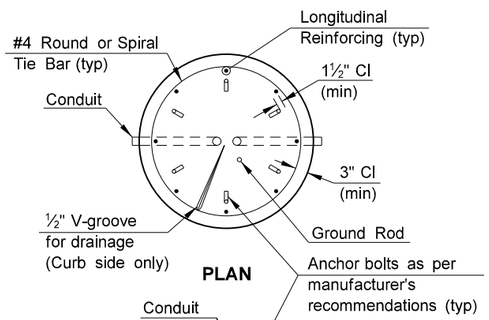

PLAN

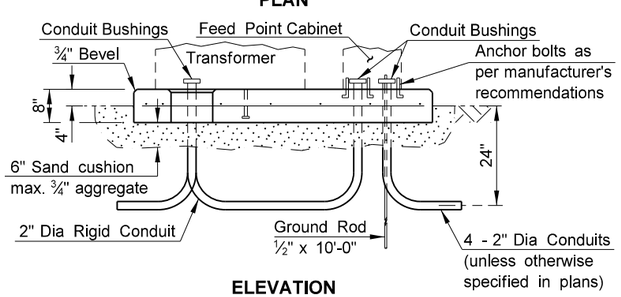

ELEVATION

TRANSFORMER & FEED POINT CABINET FOUNDATION PAD MOUNT

The Transformer & Feed Point Cabinet Foundation Pad Mount shall be bid as Concrete Foundation ~ Feed Point ~ Type A.

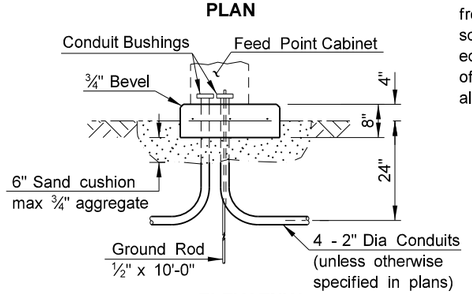

ELEVATION

FEED POINT CABINET FOUNDATION PAD MOUNT

The Feed Point Cabinet Foundation Pad Mount shall be bid as Concrete Foundation ~ Feed Point ~ Type B.

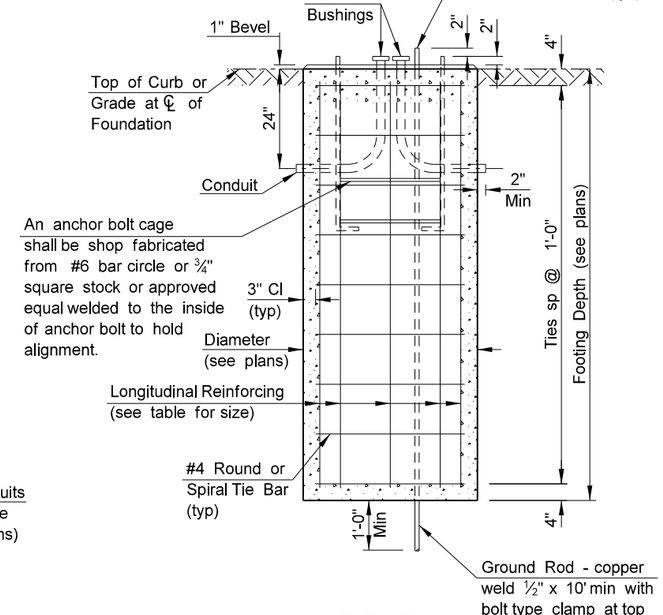

ELEVATION

LIGHT & SIGNAL STANDARD FOUNDATION

NOTES:

LIGHT & SIGNAL STANDARD FOUNDATIONS:
See plans for conduit size, number of bends and correct position for each foundation. When conduit does not continue beyond the foundation, conduit with a 105° bend and bushings on both ends may be substituted for the 90° bends shown. See plans for correct size & location of foundations. The grade and exact location shall be established by the Engineer in the field. All reinforcing shall be Grade 60. Tie bars shall have a minimum of a 12" lap. Reinforcing may be omitted for Type I, II, V, VI & VII signal standard foundations if the anchor bolts extend to within 3" to 6" above the bottom of the foundation. A minimum of 6 anchor bolts shall be used for cantilevered structures.

CONTROLLER CABINET FOUNDATION PAD MOUNT FOUNDATION: See plans for the number of 90° bends per foundation and correct positioning. The foundation for Pad Mounted Controller Cabinet shall be of sufficient size so that there is a minimum of 3" of clearance from the outside edge of cabinet to the outside edge of the foundation on any side. The contractor shall ensure a water-tight seal between the controler cabinet and the foundation by caulking, except for V-groove.

WORKING AREA SLAB: The materials and preparation of this slab shall be as approved by the Engineer in the field.

TRANSFORMER & FEED POINT CABINET FOUNDATION PAD MOUNTED: The foundation shall have a wood float finish. All conduits shown shall be installed. Conduit that is not used at this time shall be plugged with an expandable plug.

FEED POINT CABINET FOUNDATION PAD MOUNTED: The foundation shall have a wood float finish. All conduits shown shall be installed. Conduit that is not used at this time shall be plugged with an expandable plug.

LIGHT & SIGNAL FOUNDATION TABLE	
FOOTING DEPTH (ft)	LONGITUDINAL REINFORCING
≤ 12	8 - #5
13 - 14	8 - #6
15 - 16	8 - #7
17 - 19	8 - #8

NORTH DAKOTA DEPARTMENT OF TRANSPORTATION	
6-15-10	
REVISIONS	
DATE	CHANGE

This document was originally issued and sealed by Terrence R. Udland Registration Number PE- 2674 , on 6/15/10 and the original document is stored at the North Dakota Department of Transportation

FEED POINTS
(ROADWAY LIGHTING)

D-770-2

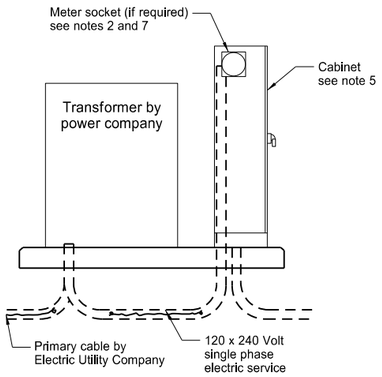

Elevation

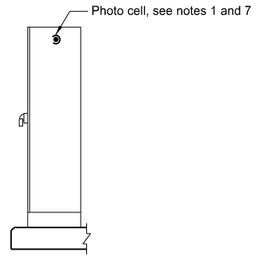

Photo Cell
Mounting Detail

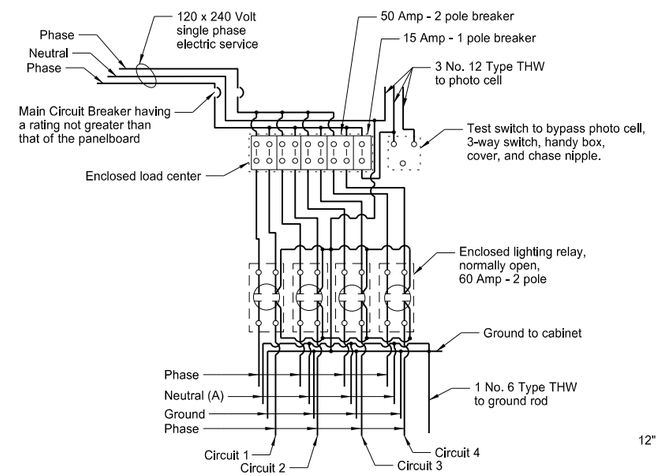

Feed Point Type IV

Provide Type I feed point similar to Type IV, except with one electrical circuit, one 50 Amp - 2 pole breakers, and one lighting relay, normally open.

Provide Type II feed point similar to Type IV, except with two electrical circuit, two 50 Amp - 2 pole breakers, and two lighting relays, normally open.

Provide Type III feed point similar to Type IV, except with three electrical circuits, three 50 Amp - 2 pole breakers, and three lighting relays, normally open.

(A) Install when festoon circuit is required.

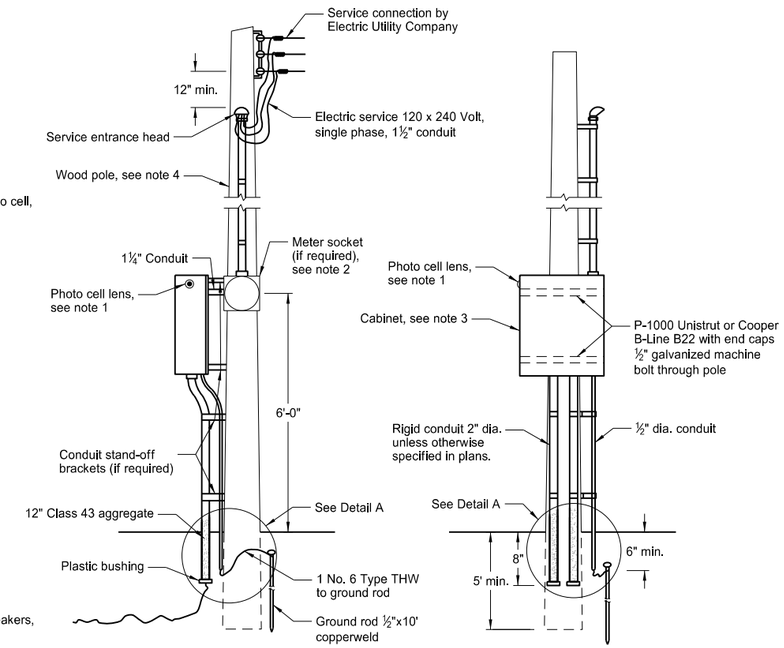

Feed Point Pole Mounted

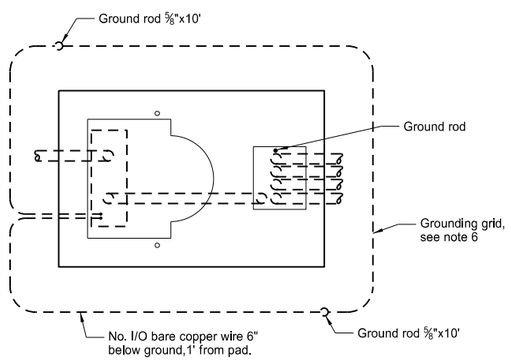

Plan

Transformer and Feed Point Cabinet Pad Mounted

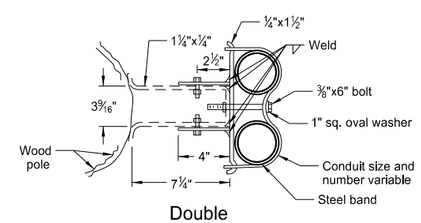

Double

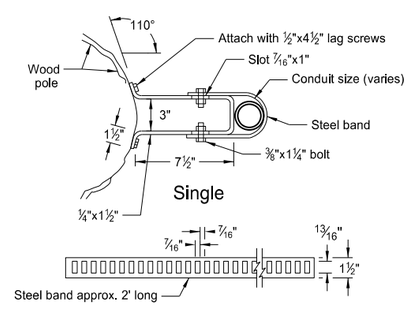

Single

Conduit Standoff Bracket

Omission of conduit standoff brackets allowed
when not required by local utility company.

Notes:

1. Photo Cell: Furnish and install the photoelectric cell. Face photo lens north.
2. Meter Socket: Install meter socket and trim if the meter is required by local Utility Company. Meter furnished and installed by Utility Company.
3. Pole Mounted Cabinet: Provide cabinet with lock drip shield, factory installed steel backing, stainless steel hardware, and side hinge door. Shop coat cabinet with one coat of primer and two coats of exterior gray enamel.

   Provide 30" high x 24" wide x 8" deep Type I and II feed points. Provide 30" high x 42" wide x 10" deep or 36" high x 36" wide x 10" deep Type III and IV feed points.
4. Wood Pole: Provide minimum 20' Class VII full length penta pressure treated wood pole. (if required, see layout sheets)
5. Pad Mounted Cabinet: Provide 56" high x 26" wide x 14" deep weatherproof cabinet. Minimum 12 gauge steel or aluminum with provisions for padlock. Provide steel cabinet with one coat of primer and two coats of exterior dark green enamel.
6. Grounding Grid: Provide grounding grid with a maximum ground resistance of 25 ohms, using one or more ⅝"x10' copperweld ground rods in parallel or series at two corners. Provide a minimum distance between ground unit assemblies of 6'0".
7. Meter Location: Do not mount the meter (if required) on the same side of the cabinet as the photo cell.

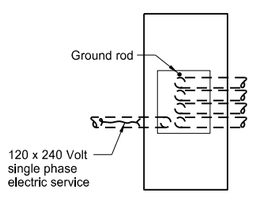

Plan

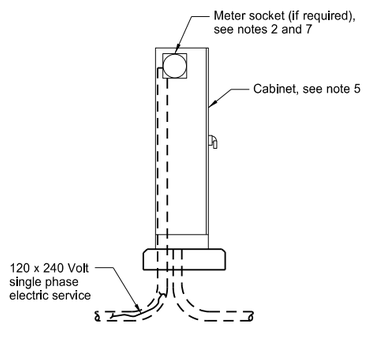

Elevation

Feed Point Cabinet Pad Mounted

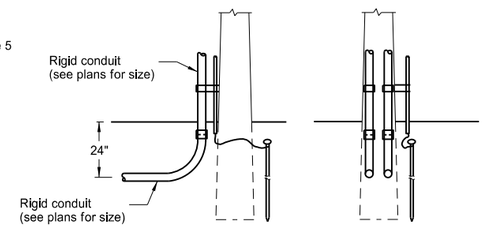

Detail A

Use this detail for a continuous run of conduit from the feed point to the first light standard.

NORTH DAKOTA DEPARTMENT OF TRANSPORTATION	
10-8-13	
REVISIONS	
DATE	CHANGE
7-8-14 10-17-17	Revised note 3. Updated to active voice.

This document was originally issued and sealed by Roger Weigel, Registration Number PE- 2930, on10-17-2017and the original document is stored at the North Dakota Department of Transportation

PULL BOX DETAILS

D-770-3

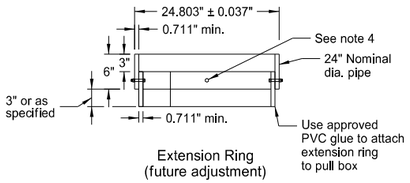

Extension Ring
(future adjustment)

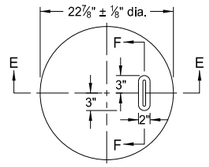

Concrete Cover

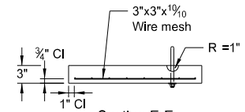

Section E-E

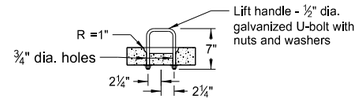

Section F-F

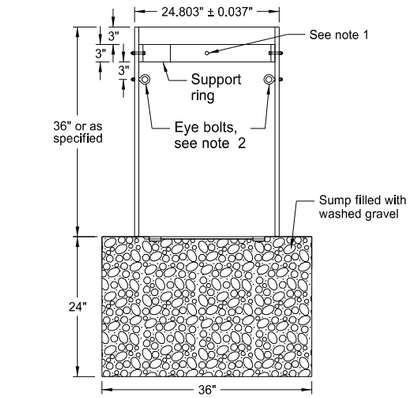

Elevation

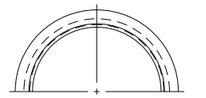

Half Top View

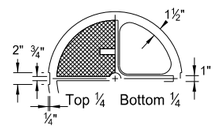

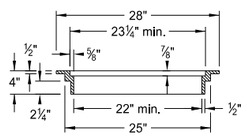

Section Frame

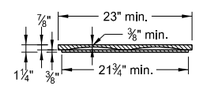

Section Cover

Cast Iron Frame and Cover

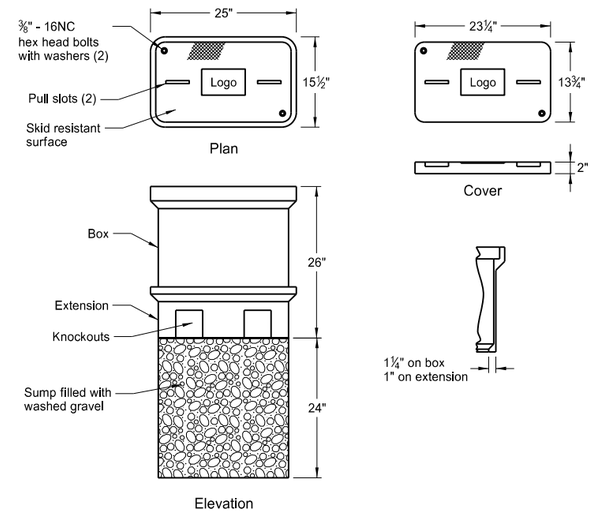

Polymer Concrete Pull Box

Note: Polymer concrete reinforced by a heavy weave fiberglass

Polymer Concrete Pull Box Notes:

1. Place top of pull box flush with surfaced area and approximately one inch above earth or sodded areas on level surfaces.
2. Provide at least one knockout per side in pull box.
3. Provide Polymer Concrete pull box meeting Tier 22 as per ANSI / SCTE 77.

PVC Pull Box

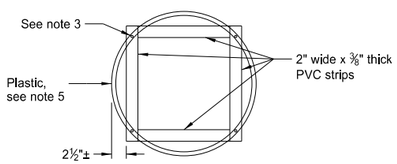

Bottom View

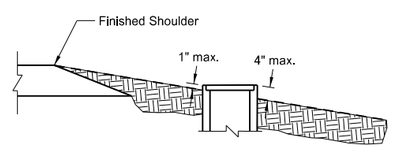

Typical Pull Box in Rural Section

PVC Pull Box Notes:

1. Attach split 24" nominal diameter PVC cover support ring with four ⅜" dia. x 2" long stainless steel hex head bolts with nuts at 90 degrees apart.
2. Two type 2 shoulder eye bolts, ⅜" dia. x 1¼" shank length with hex nuts 180 degrees apart (for lifting pull box and supporting electric cable).
3. Four ¼" x 1¼" long galvanized lag screws. Screw assembly together.
4. Attach split 24" nominal diameter PVC cover support extension ring with four ⅜" dia. x 2" long stainless steel hex head bolts with nuts at 90 degrees apart.
5. Bolt assembly together.
6. Size conduit holes in barrel section a maximum of 1" larger than size of conduit being used.
7. After pull box and conduit installation, make inside walls and cover water tight to the satisfaction of the Engineer.
8. PVC pipe to meet requirements of ASTM F679T-1 or equal.
9. Use austenitic stainless steel hex head bolts and nuts. Galvanize other fasteners as per AASHTO M-232.
10. Coat concrete cover on top and sides with an approved epoxy coating. Apply light gray, clear, or neutral color epoxy protective coating as recommended by the manufacturer. Clean the surfaces of concrete receiving the epoxy protective coating by wire brush and dry before application.
11. Cast Iron Cover castings shall be gray iron as per AASHTO M 105, Class 35B.

NORTH DAKOTA DEPARTMENT OF TRANSPORTATION	
10-8-13	
REVISIONS	
DATE	CHANGE
7-8-14	Added Note 3
10-17-17	Updated to active voice.

This document was originally issued and sealed by Roger Weigel, Registration Number PE- 2930, on10-17-2017and the original document is stored at the North Dakota Department of Transportation

LIGHTING AND SIGNAL DETAILS

D-770-4

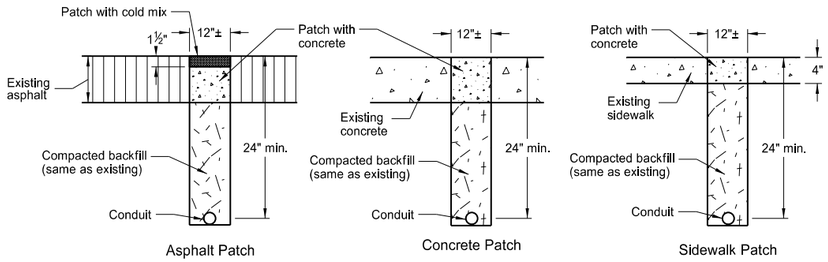

Surface Patch Details

Note: Saw cut trenches. Use PCC pavement for replacement concrete with the coarse aggregate gradation, maximum size and method of curing as approved by the Engineer. Immediately prior to pouring replacement concrete, paint all surfaces with an approved epoxy compound.

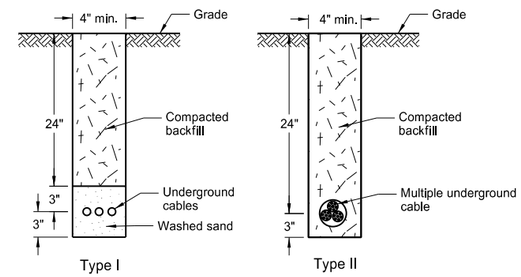

Cable Trench

Note: Sod entire area disturbed by trenching, unless directed otherwise by the Engineer.

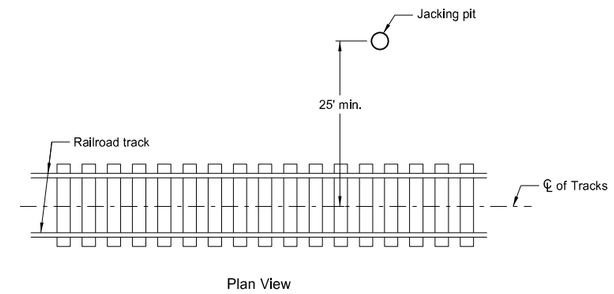

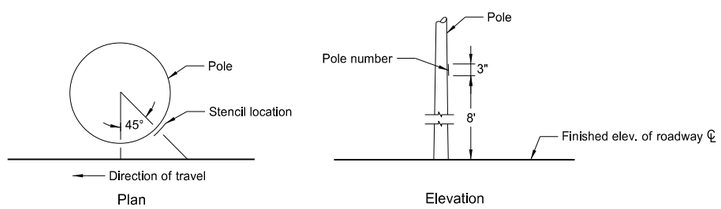

Light Standard Numbering

Note: On the roadway side of each light standard, stencil the pole number using black paint or an adhesive coated plastic such as Scotchcal by 3M or as approved by the Engineer. See layout sheets for pole numbers.

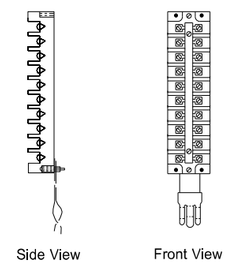

Terminal Block Detail

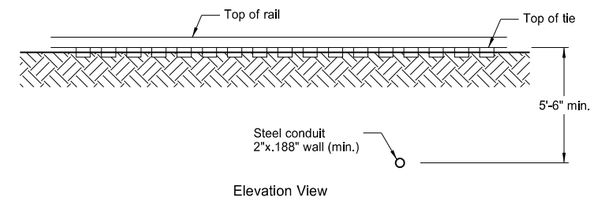

Conduit Placement under Railroad Tracks

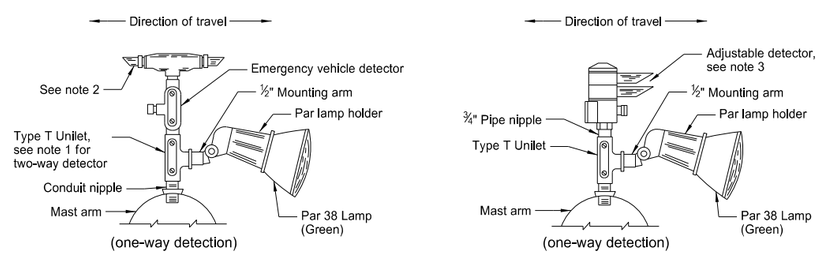

Emergency Vehicle Detector Detail

Alternate Emergency Vehicle Detector Detail (adjustable)

Notes:
1. Use Type X Unilet with two Par lamp holders and lamps for Two-way Detectors. (one in each direction).
2. Plug unused end of One-way Detector with metal pipe plug.
3. Rotate detector lens to face direction of travel on Two-way Detectors.

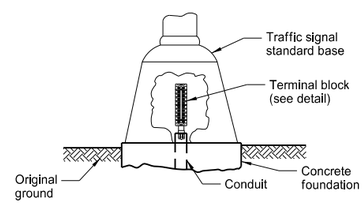

Terminal Block
(rigid mounted)

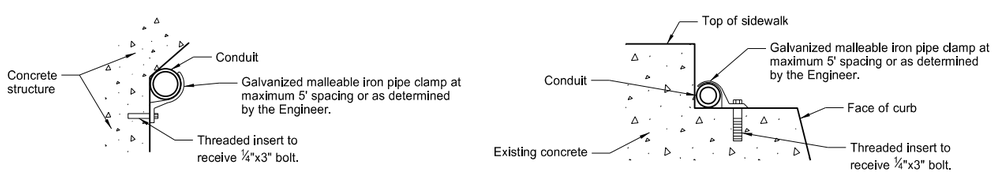

Bridge Mounted Conduit Hanger

Curb Mounted Conduit

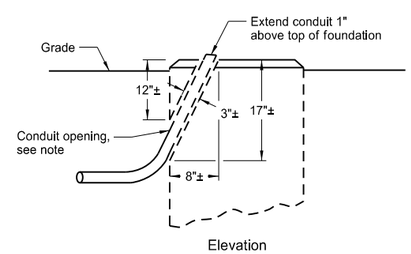

Revise Concrete Foundation

Note: Jackhammer or drill to remove material and provide a location for conduit. Make opening no larger than necessary. Place conduit, fill with concrete and finish foundation to original appearance.

NORTH DAKOTA DEPARTMENT OF TRANSPORTATION	
10-8-13	
REVISIONS	
DATE	CHANGE
10-17-17	Updated to active voice.

This document was originally issued and sealed by Roger Weigel, Registration Number PE- 2930, on 10-17-2017 and the original document is stored at the North Dakota Department of Transportation

LIGHT STANDARD DETAILS

D-770-5

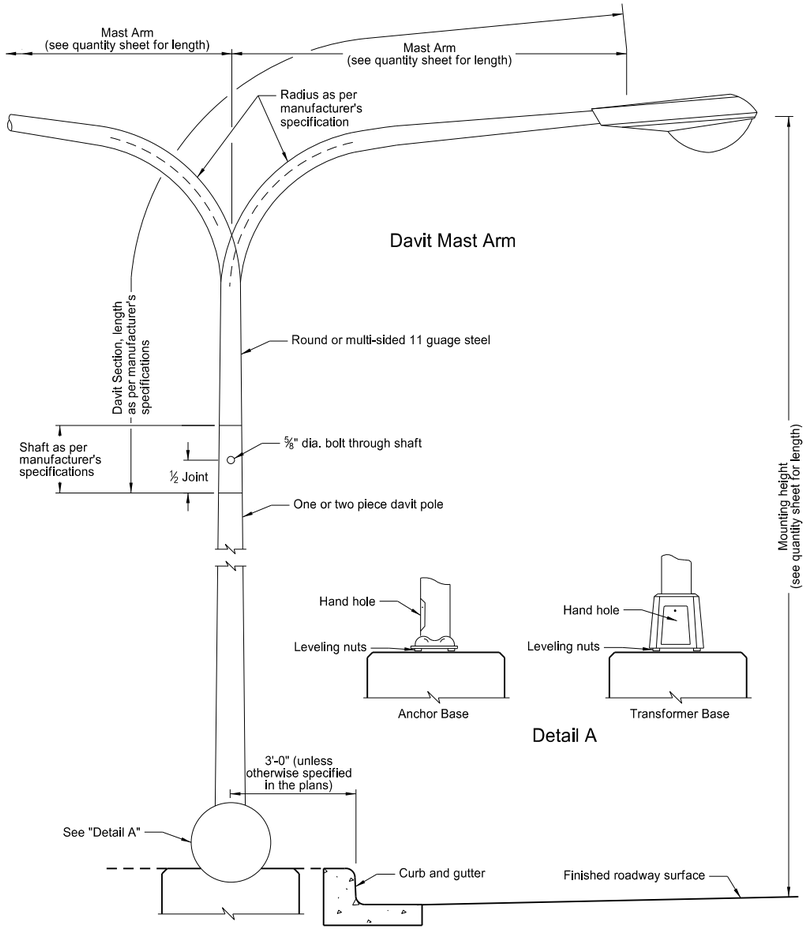

Light Standard Details

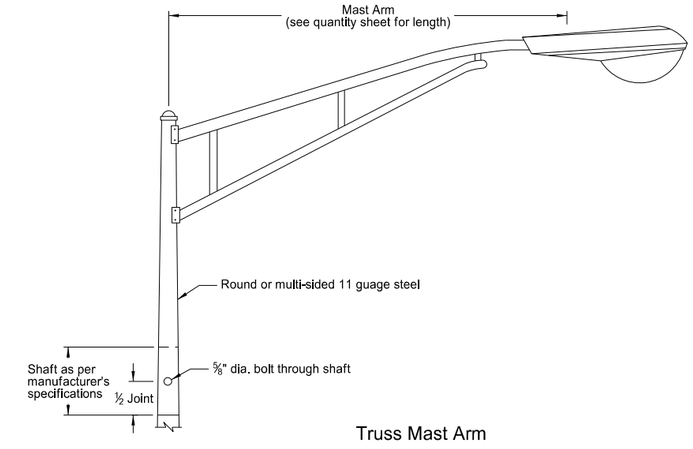

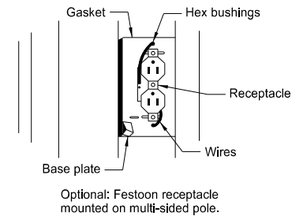

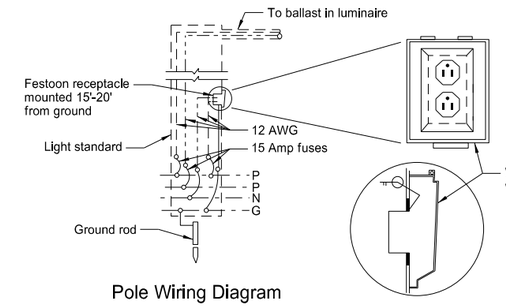

Pole Wiring Diagram

Receptacle Mounting Detail (B)

(B) Mount receptacle on side of pole that faces the street. Install Festoon Receptacle only when specified in the plans.

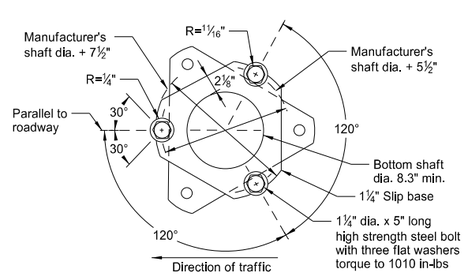

Top View

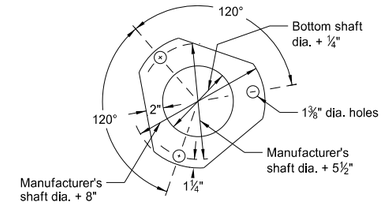

Plan View

Keeper Plate Detail (A)

(A) ASTM A446 Grade "A" 28 gauge keeper plate on top of middle flat washer. Galvanize Keeper plate after fabrication.

Notes:

Light Standard Locations: The minimum offset distance from the curb face is 3 feet. Offset light standards at least 3 feet in urban areas and where speeds are less than 30 mph. Where speeds are 30 mph or more, place light standards at least 16 feet from the driving lane.

Steel Standards: Touch up marred or scratched areas after erection.

Luminaire: Use internal ballast-constant wattage 120x240 voltage. See layout sheets for type of luminaire, wattage, I.E.S. distribution, and operating system.

Fusing: Fusing in base, see specifications.

Slip Base Bolt Torque Procedure:
1. Tighten all bolts the maximum possible with 12" to 15" wrench to bed washers and to clean bolt threads, then loosen.
2. Retighten bolts with a systematic order to prescribed torque.
3. Loosen each bolt and retighten to prescribed torque in the same order as initial retightening.
4. Burr threads of junction with nut using center punch to prevent nut loosening.

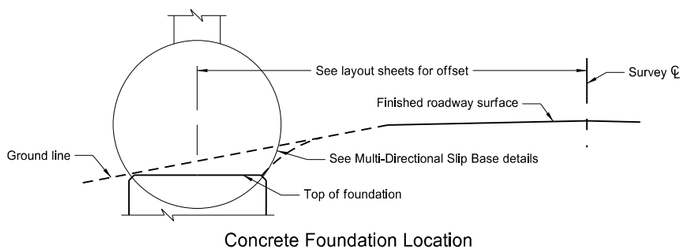

Concrete Foundation Location

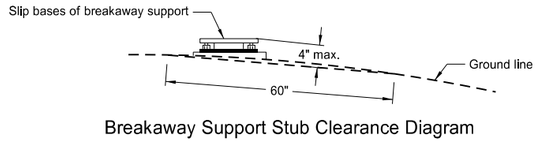

Breakaway Support Stub Clearance Diagram

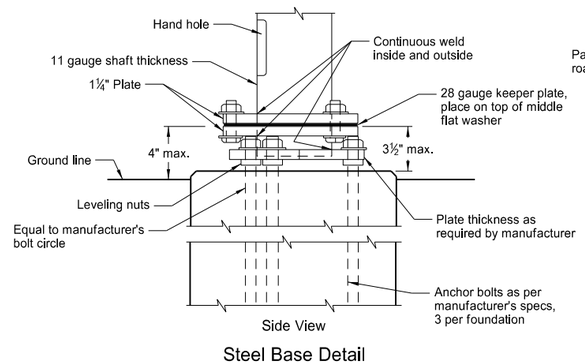

Side View

Steel Base Detail

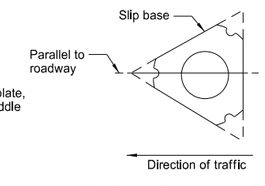

Slip Base Placement Detail

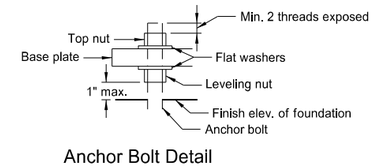

Anchor Bolt Detail

Multi-Directional Slip Base

NORTH DAKOTA DEPARTMENT OF TRANSPORTATION	
10-8-13	
REVISIONS	
DATE	CHANGE
10-17-17	Updated to active voice.

This document was originally issued and sealed by Roger Weigel, Registration Number PE- 2930, on 10-17-2017 and the original document is stored at the North Dakota Department of Transportation

HIGH MAST LIGHTING

D-770-8

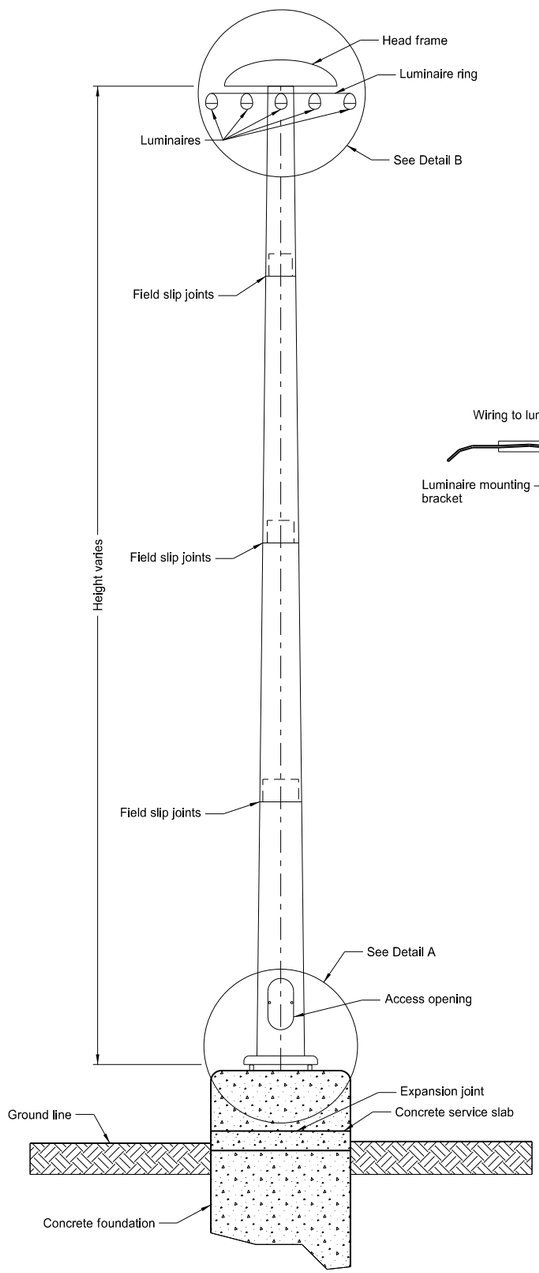

High Mast Lighting Pole Detail

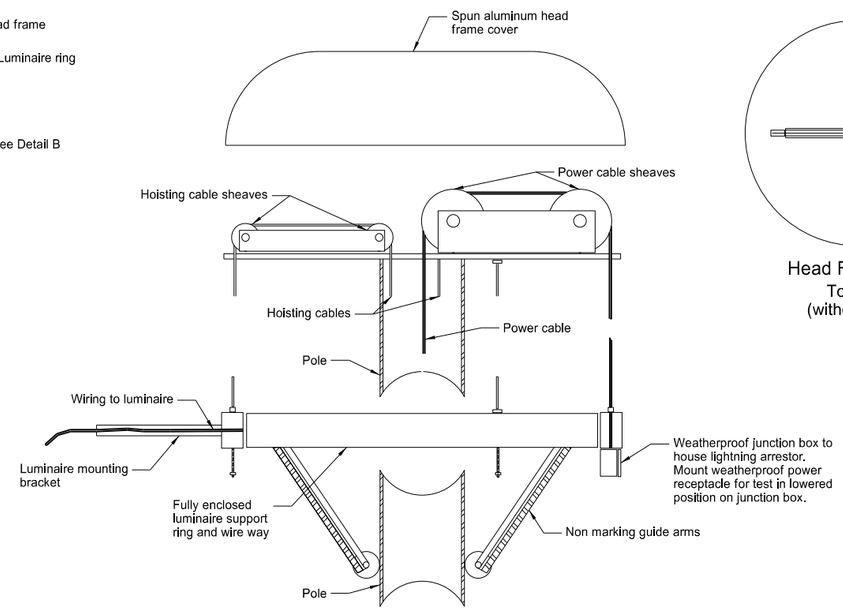

Detail B
Head Frame and Luminaire Ring
(section through pole)

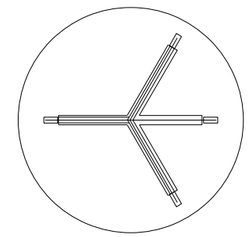

Head Frame Detail
Top View
(without cover)

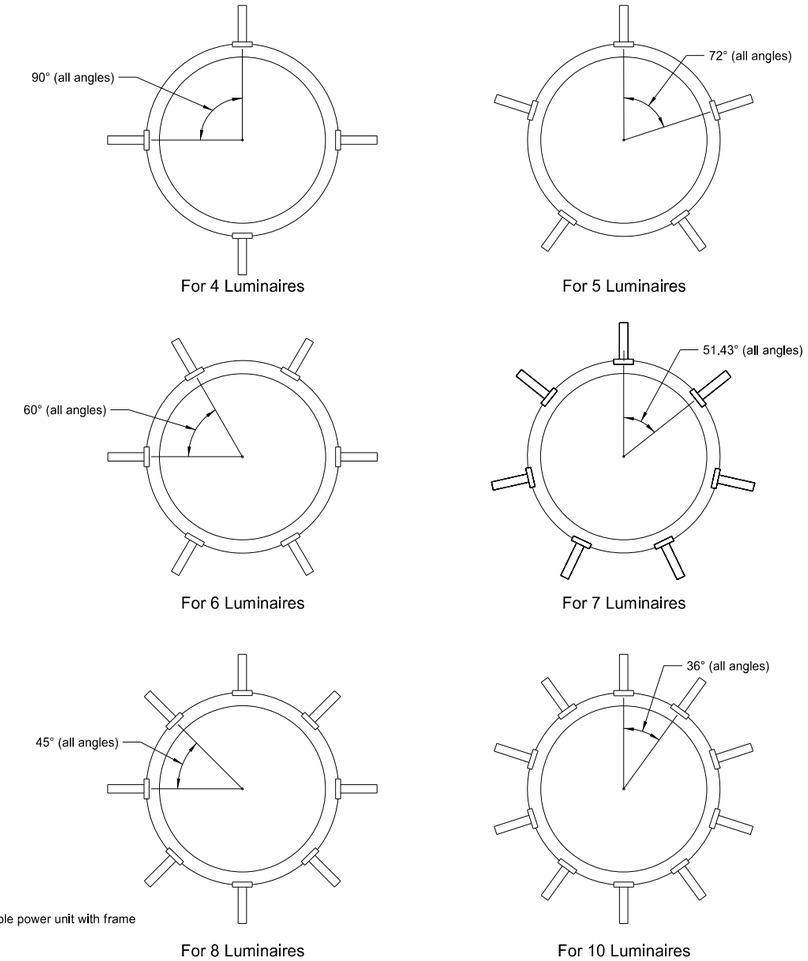

Luminaire Support Ring Details

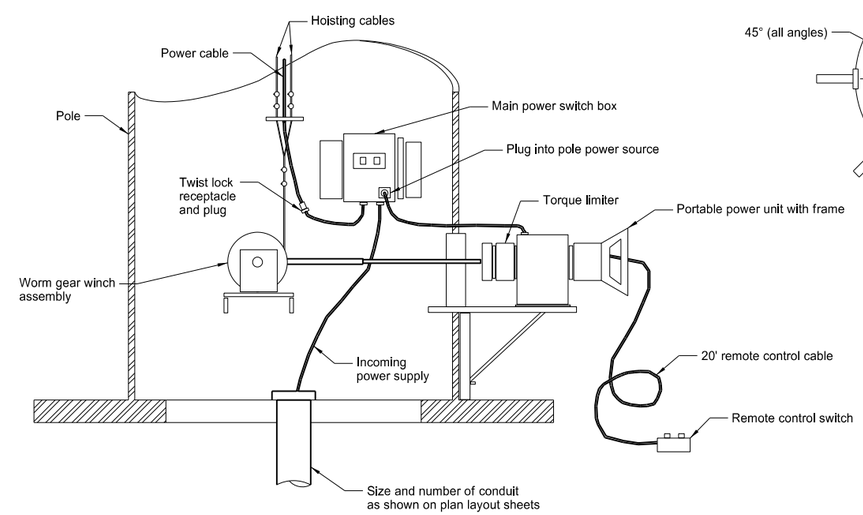

Detail A
Lowering Device
(section through base)

NORTH DAKOTA DEPARTMENT OF TRANSPORTATION	
10-8-13	
REVISIONS	
DATE	CHANGE
10-17-17	Updated to active voice.

This document was originally issued and sealed by Roger Weigel, Registration Number PE- 2930, on 10-17-2017 and the original document is stored at the North Dakota Department of Transportation

HIGH MAST LIGHTING

D-770-9

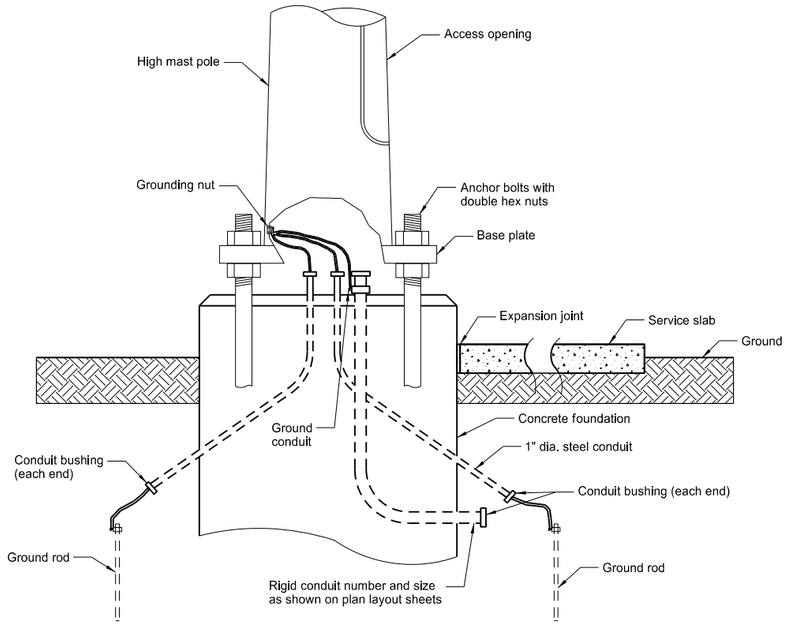

Conduit and Grounding Detail at Base

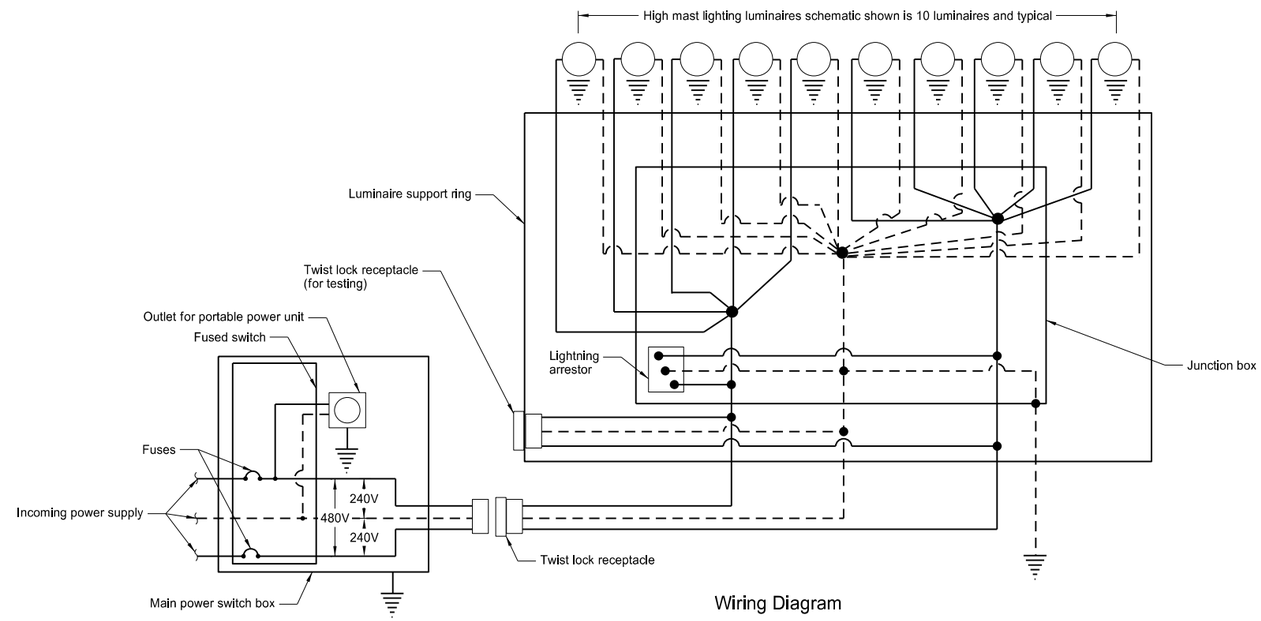

Wiring Diagram

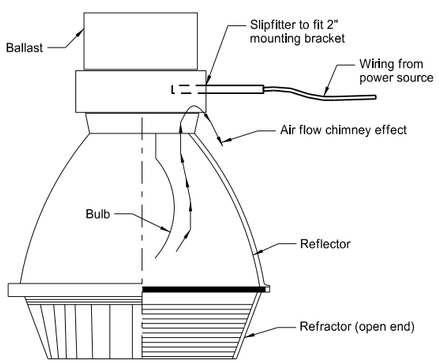

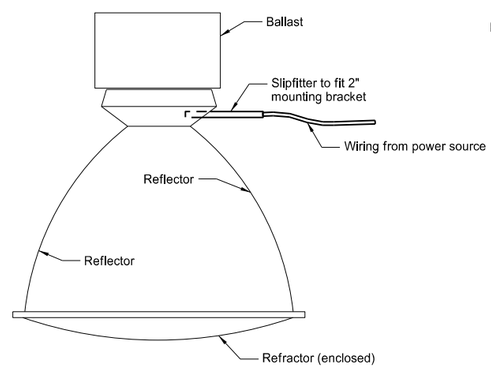

Typical Luminaire Details
(1000 watt)

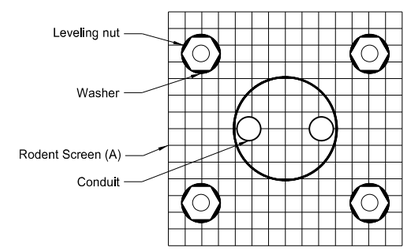

Section A-A

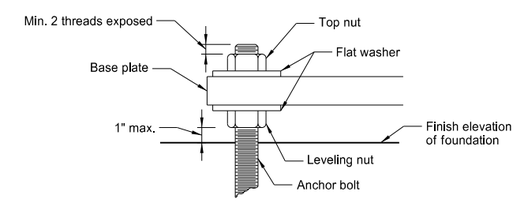

Anchor Bolt Detail

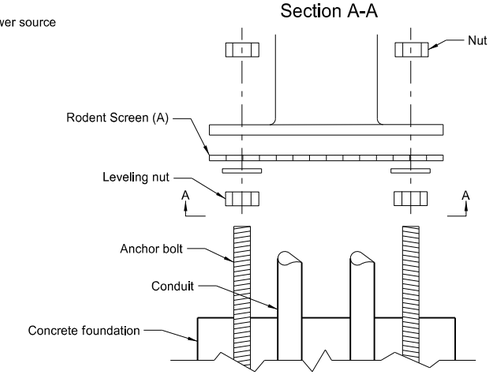

(A) ¼"x¼" galvanized steel welded wire fabric (wire dia. 0.025") cut same size as base plate and form tightly around the conduit.

Elevation View
Rodent Screen

NORTH DAKOTA DEPARTMENT OF TRANSPORTATION	
10-8-13	
REVISIONS	
DATE	CHANGE

This document was originally issued and sealed by Roger Weigel, Registration Number PE-2930, on 10/08/13 and the original document is stored at the North Dakota Department of Transportation