STATE	PROJECT NUMBER	SECTION NO.	SHEET NO.
ND	NHU-4-002(111)148	140	31

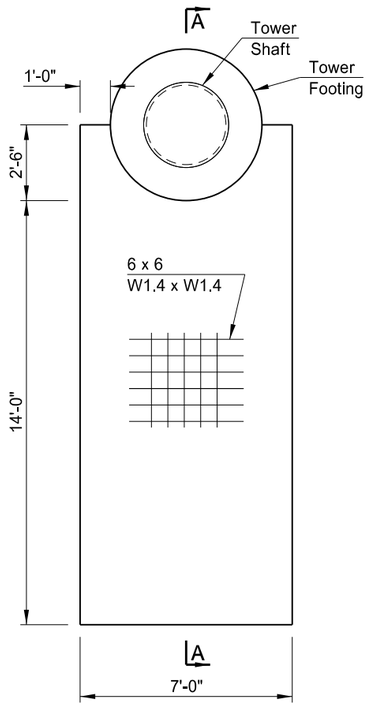

SERVICE SLAB PLAN

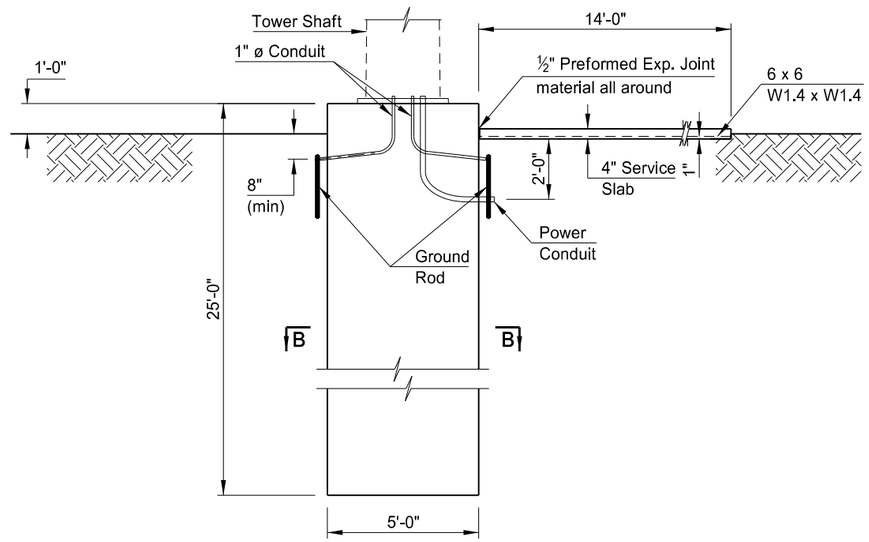

A-A

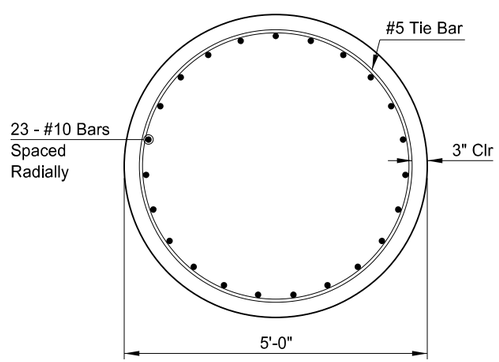

B-B

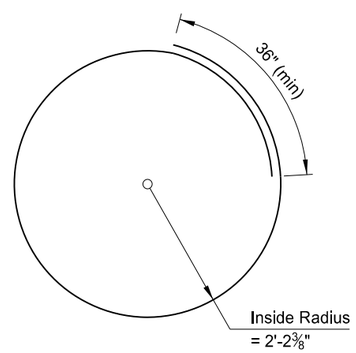

#5 TIE BAR

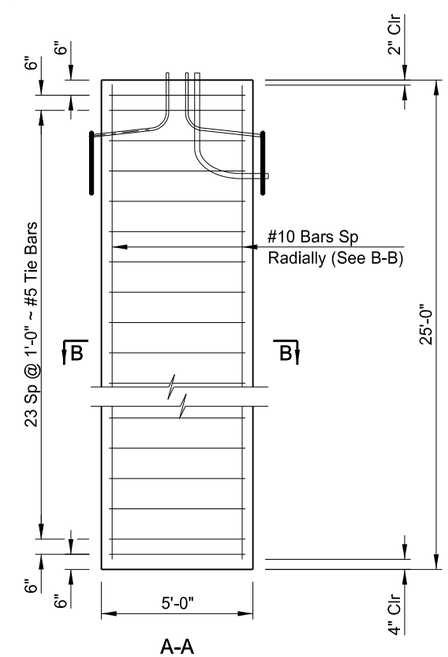

A-A

NOTES:

Include the concrete, reinforcing steel, wire fabric, expansion joint filler, and labor required to build the foundation and service slab in the bid item "Concrete Foundation - High Mast Lighting."

If temporary casing is required to build the shaft remove the temporary casing as the concrete is placed. Include the material and labor required for the temporary casing in the bid item "Concrete Foundation - High Mast Lighting."

CLASS AE CONCRETE - SIGN FOUNDATIONS: The class AE Concrete that is used will meet all requirements specified in section 602. Cast all drilled shafts continuously with no construction joints. Provide Grade 60 reinforcing steel that meets the requirements of Section 612. Include the concrete, reinforcing bars, excavation, and labor required to build the sign foundations in the pay item "Concrete Foundation - High Mast Lighting."

Estimated quantities (one foundation and service slab)

Class AE-3 Concrete	19.5	CY
* Reinforcing Steel	2,909	LBS

The see pole shop drawings for anchorage details.

* Includes wire fabric.

REGISTERED PROFESSIONAL ENGINEER
Schwagler, Tim L.
PE-3151
08/30/18
NORTH DAKOTA

BRIDGE BID ITEMS

SPEC	CODE	ITEM DESCRIPTION	UNIT	QUANTITY
770	0030	CONCRETE FOUNDATION-HIGH MAST LIGHTING	EA	5

US 2 AND US 52 INTERCHANGE

CONCRETE FOUNDATION
HIGH MAST LIGHTING DETAILS