STATE	PROJECT NO.	SECTION NO.	SHEET NO.
ND	NHU-3-020(074)103	165	1

TABLE OF CONTENTS - Rail Plans

Section No.	Sheet No.	Description
165	1	Temporary & Permanent Alignments
165	2-3	Notes
165	4	Curve & Turnout Details
165	5-9	Typical Sections
165	10	Access Roads & Stormwater Grading
165	11-15	Construction Sequencing Exhibits
165	16-17	Turnout Pad Grading Details
165	18	HMA Layout Detail
165		Plan & Profiles
	19-27	Temporary Mainline & Siding
	28-31	Temporary Industrial 1361
	32-34	Temporary Industrial 1352
	35-43	Permanent Mainline & Siding
	44-47	Permanent Industrial 1361
	48-50	Permanent Industrial 1352
200		Cross-sections
	62-86	Temporary Mainline & Siding
	87-105	Temporary Industrial 1361
	106-113	Temporary Industrial 1352
	114-134	Permanent Mainline & Siding
	135-152	Permanent Industrial 1361
	153-161	Permanent Industrial 1352

RAIL PLAN MATERIAL QUANTITIES

Spec	Code	Bid Item	Quantity	Unit
203	0101	COMMON EXCAVATION-TYPE A	13370	CY
203	0109	TOPSOIL	4284	CY
203	0140	BORROW-EXCAVATION	3550	CY
302	0120	AGGREGATE BASE COURSE CL 5	232	TON
430	0500	COMMERCIAL GRADE HOT MIX	138	TON
704	3501	PORTABLE PRECAST CONCRETE MED BARRIER	40	LF
708	1200	SMALL ROCK COVER	620	TON
714	4115	PIPE CONDUIT 36IN	64	LF
714	4120	PIPE CONDUIT 42IN	44	LF
722	3760	INLET SPECIAL-TYPE 1 60IN	1	EA
980	0510	SUBBALLAST	9353	TON

LEGEND

- Proposed Temporary Rail
- Proposed Permanent Rail
- Existing Rail

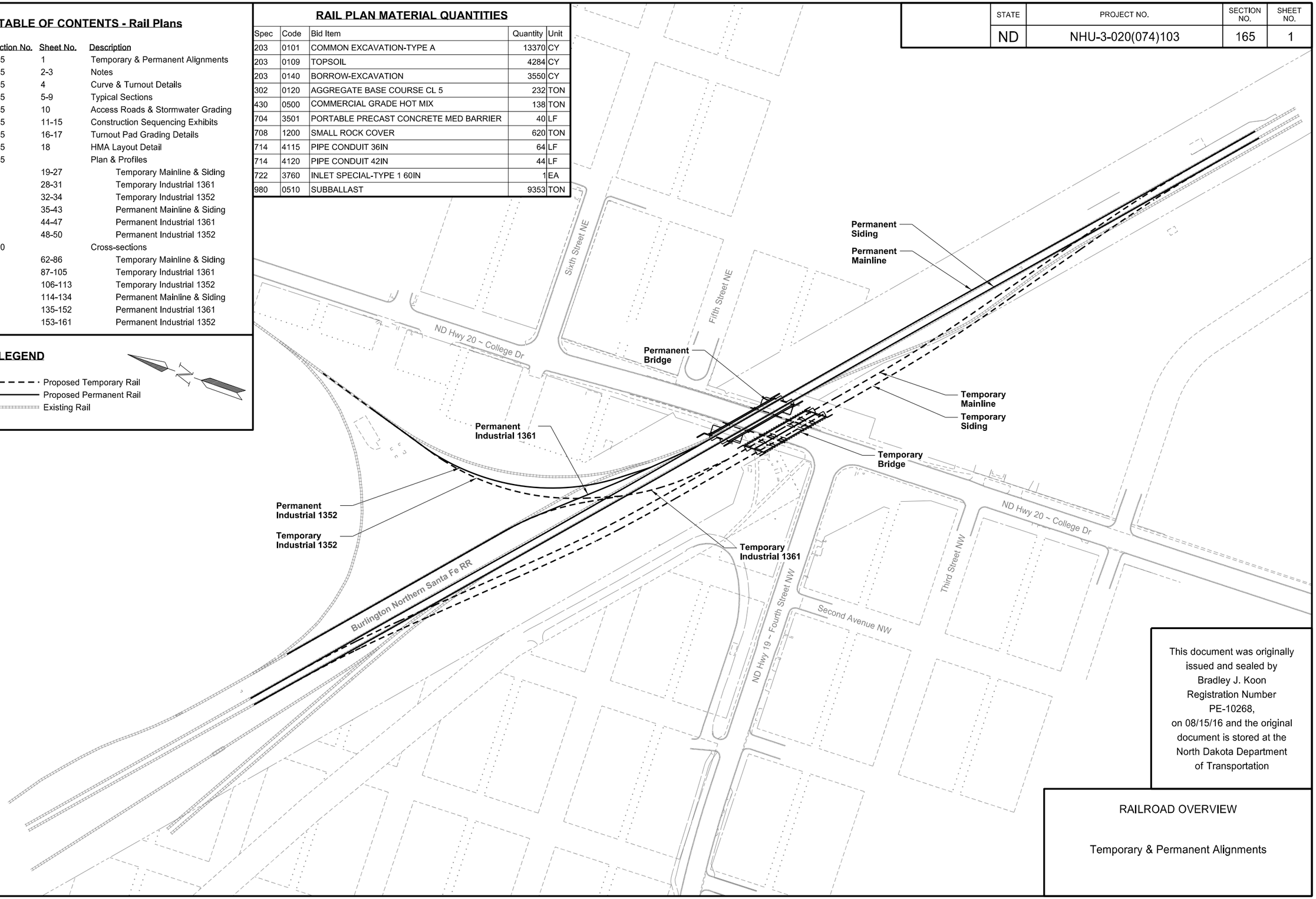

This document was originally issued and sealed by Bradley J. Koon Registration Number PE-10268, on 08/15/16 and the original document is stored at the North Dakota Department of Transportation

RAILROAD OVERVIEW

Temporary & Permanent Alignments

NOTES

P-01 These notes are for general reference in conjunction with, and as a supplement to the written specifications, details, addenda and change orders associated with the contract documents. Additional construction notes are included on individual drawings.

P-02 All references to the "Engineer" within this section (165) of the construction plans refers to the Vice President-Chief Engineer, of BNSF Railway or his authorized representative.

P-03 RAILROAD CONSTRUCTION & MAINTENANCE AGREEMENT: Conduct all work to be performed within the railroad right-of-way per the rules set forth in the Construction & Maintenance Agreement between NDDOT and BNSF Railway.

P-04 EXISTING UTILITIES: The location of existing utilities are shown in an approximate way only and have not been independently verified by the owner or its representative. Determine the exact location of all existing utilities before commencing work. Make underground locates using the "ONE CALL" number 1-800-795-0555. Contact BNSF for utility locates within BNSF right-of-way by calling 1-800-533-2891.

1. The Contractor is responsible to remove, relocated and/or adjust all existing utilities which may not be shown on these documents.

2. Field verify existing conditions and existing utilities prior to construction. If the site is found to be different than the construction plans, notify the Engineer of the discrepancy prior to commencing any work.

P-05 RAILROAD CONSTRUCTION PHASING: The railroad construction sequence and schedule are critical components of the project. Coordinate all construction activities with BNSF Railway and, in general, conduct the work in the order of events identified in the sequencing table and exhibits on Sheets 11-15.

P-06 TRAFFIC CONTOL: Submit a traffic control plan to manage construction traffic accessing and leaving the site, prior to beginning construction.

P-07 CONSTRUCTION TRAFFIC ON RAIL BRIDGES: Use of the temporary and permanent rail bridges for construction traffic access purposes is only permissible when the associated siding and mainline tracks are inactive. Construction traffic may not exceed the design loading specifications (Cooper E80 Live Load). Follow the requirements in the special provisions for protection of the bridge waterproofing membrane prior to use of the bridge by construction vehicles.

P-08 TEMPORARY SHORING: When performing excavations for railroad construction, adhere to the BNSF/UP "Guidelines for Temporary Shoring" (2004). For track construction on this project, shoring is not required unless the contractor deviates from the lines, grades, or dimensions shown in the plans.

203-P01 RAILROAD EMBANKMENT: For railroad embankment construction, follow the requirements of Section 203.04 as well as the following modified compaction requirements:

A. Compact embankment material to a density of not less than 95% of the maximum modified laboratory density, and maintain moisture content within 4 percentage points of optimum, unless otherwise specified on the drawings. Determine the laboratory density and optimum moisture content in accordance with Section 203.04.E.2 of the standard specifications.

230-P01 SUBGRADE AND EMBANKMENT FOUNDATION PREPARATION (BNSF Mainline Design Guidelines for Track Projects – Revised November 2015):

A. Embankment Foundation Preparation: Proof roll the ground surface of all areas to receive embankment prior to commencement of fill operations. Proof rolling consists of the Engineer's observation of soil deflection beneath the tires of the Contractor's heaviest rubber tired equipment, e.g. loaded water trucks, loaded scrapers, or loaded dump trucks. Proof rolling includes a minimum of two passes. Treat any soft zones detected in this manner which cannot be effectively compacted with repeated passes of a roller as directed by the Engineer. This work is incidental to embankment and direct payment for such work will not be made.

251-P01 SEEDING: See sections 076 and 077 for seeding extents and specifications. Seed the railroad corridor twice over the course of the project (once following temporary rail construction and once following permanent rail construction); see the railroad construction sequencing table on Sheet 11. Prior to placing seed on the disturbed and designated areas of the site, perform final grading operations. Perform final grading to ensure the site has been constructed as detailed in the plans and specifications.

302-P01 SUBBALLAST:

1. DESCRIPTION: When shown on the plans, place subballast directly onto the finished subgrade in order to provide a roadbed finish such that preservative impregnated fibers on the under side of ties will not be penetrated or crushed during track construction.

2. MATERIALS

A. For Subballast material throughout the project, use NDDOT Aggregate Base Course CL 5 with the following modification to the gradation:

Sieve Size	Percent Passing
No. 200	4-6

Acceptance of the Subballast gradation must meet the requirements of 816.04.B.3.

3. EXECUTION

A. General

1. Place subballast in uniform lifts of not more than 6 inches loose for the full width of the cross section. Compact each lift of subballast to a density of not less than 95% of the maximum dry density determined by Section 203.04.E.2 of the standard specifications.

2. When preparing for subballast placement, take care not to disturb the existing railroad bed. See the typical sections and cross-sections for proposed limits of subballast placement.

714-P01 PIPE FOR EARTH BORING AND JACKING:

A. General: For design loading on the pipe, include Earth Load, Cooper E 80 Live Load, Impact, and any other surcharge loads.

B. Corrugated steel pipe: Provide pipe in accordance with NDDOT Section 714 and as specified hereafter:

1. Use corrugated steel pipe of 8 gage wall thickness, zinc coated in accordance with AASHTO M-218 or aluminum coated in accordance with AASHTO M-274.

Corrugations

Diameter	Nominal Size	Maximum Pitch[1]	Minimum Inside Radius
8" – 96"	$2-\frac{2}{3}$" x $\frac{1}{2}$"	$2-\frac{3}{4}$"	$\frac{11}{16}$"
12" – 96"	3"x1"	$3-\frac{1}{4}$"	$\frac{9}{32}$"

[1] Pitch is measured at right angles to the corrugation.

This document was originally issued and sealed by Bradley J. Koon Registration Number PE- 10268, on 08/17/16 and the original document is stored at the North Dakota Department of Transportation

NOTES

2. Use corrugated steel pipe that is punched and match marked for field bolting.

C. Smooth steel pipe: Provide pipe in accordance with ASTM Designation: A 139, Grade B, with a minimum yield strength of 35,000 psi

D. Reinforced concrete pipe: Provide Class V, wall C circular pipe in accordance with ASTM Designation C76 and the following components:

1. Tongue and groove design;
2. Watertight joint gaskets.

714-P02 EARTH BORING AND JACKING CULVERT PIPE:

A. General:

1. Use materials in accordance with Note 714-P01.
2. Use corrugated steel pipe that has been punched and match marked by the manufacturer for field bolting.
3. Provide sewer type bands for watertight joints for corrugated steel pipes when shown on the plans or special provisions.
4. Use full penetration welds meeting the requirements of AWS D1.1 to join sections of smooth steel pipe.
5. Repair pipe damaged in jacking or boring operations in place to the satisfaction of the Engineer. Remove and replace pipe damage beyond repair. Complete repair or removal and replacement of damaged pipe at the Contractor's expense.
6. Excessive voids will not be permitted in the jacking process. If the installation process results in significant voids, install grout plugs in pipe and fill all voids between the outside of the pipe and inside surface of the excavation by pressure grout as soon as possible after the completion of the installation. The grout mix must be approved by the Engineer.
7. If the grade of the pipe at the jacking or boring end is below the ground surface, excavate suitable pits or trenches for the purpose of conducting the jacking or boring operation and for placing end joints of the pipe. Locate the pits 30 feet (min.) from centerline of the track to be bored. Protect excavations greater than five (5) feet in depth in accordance with OSHA Trench Safety Guidelines.
8. Where pipe is required to be installed under railroad embankments, highways, streets, or other facilities by jacking or boring methods, install pipe in such a manner that it will not interfere with the operation of the railroad, street, highway, or other facility, and not weaken or damage any embankment or structure.
9. Backfill the pits or trenches excavated to facilitate jacking or boring operations immediately after the installation of the pipe has been completed.

B. Jacking:

1. Provide heavy duty jacks suitable for forcing the pipe through the embankment. In operating jacks, apply even pressure to all jacks used. Provide a suitable jacking head and suitable bracing between the jacks and the jacking head so that pressure will be applied to the pipe uniformly around the ring of the pipe. Joint cushioning material of plywood or other material must be approved by the Engineer. Use plywood cushioning material that is 3/4-inch minimum thickness. Cushioning rings may be made up of single or multiple pieces. Provide a suitable jacking frame or backstop. Set the pipe to be jacked on guides, properly braced together, to support the section of the pipe and to direct the pipe in the proper line and grade. Place the whole jacking assembly so as to line up with the direction and grade of the pipe. In general, excavate the embankment material just ahead of the pipe, the material removed through the pipe, and the pipe forced through the embankment with jacks, into the space thus provided.
2. Excavate the underside of the pipe, for at least one-third of the circumference of the pipe, so as to conform to the contour and grade of the pipe. Over-excavation to provide not more than 2 inches of clearance may be provided for the upper half of the pipe. Taper this clearance to zero at the point where the excavation conforms to the contour of the pipe. Pressure grout any over-excavation in excess of 1 inch the entire length of the installation.
3. Do not extend the excavation beyond the end of pipe further than 2 feet. When necessary, decrease this distance as directed by the Engineer.
4. When possible, jack the pipe from the low or downstream end. Do not allow the final position of the pipe to vary from the line and grade shown on the plans, or established by the Engineer, by more than 1/8 inch per 1 foot. Ensure the final flow line is in the direction shown on the plans.
5. Use of a cutting edge of steel plate around the head end of the pipe extending a short distance beyond the end of the pipe with inside angles or lugs to keep the cutting edge from slipping back onto the pipe is permissible.
6. Complete jacking work in a continuous manner to minimize the tendency of the material to "freeze" around the pipe.

C. Boring:

1. Proceed the boring from a pit provided for the boring equipment and workmen. Obtain the Engineer's approval for location of the pit. Complete the boring mechanically either using a pilot hole or by the auger method.
2. When utilizing the pilot hole method, bore an approximate 2 inch pilot hole the entire length of the crossing and check for line and grade on the opposite end of the bore from the work pit. Use the pilot hole to serve as the centerline of the larger diameter hole to be bored.
3. When utilizing the auger method, use a smooth steel pipe of the appropriate diameter equipped with a cutter head to mechanically perform the excavation. Use an auger of sufficient diameter to convey the excavated material to the work pit.
4. Dispose of excavated material as approved by the Engineer. The use of water or other fluids in connection with the boring operation will be permitted only to the extent necessary to lubricate cuttings; jetting is not permitted.
5. In unconsolidated soil formations, a gel-forming colloidal drilling fluid consisting of at least 10 percent of high grade processed bentonite may be used to consolidate cuttings of the bit, seal the walls of the hole, and furnish lubrication for subsequent removal of cuttings and immediate installation of the pipe. The allowable variation from line and grade is specified in Paragraph B.4. Remedy areas of overcutting in excess of 1 inch by pressure grouting the entire length of the installation.

714-P03 CULVERT REPAIR: There is an existing culvert beneath the Industrial 1352 track at Sta. 402+41 (temporary alignment) that will be extended beneath both the temporary and permanent track embankments. Prior to connecting the new pipe to the existing, inspect and repair all defects of the existing pipe, including: cracking, spalling, exposed reinforcement, and any other visible imperfections. Prior to performing any pipe/culvert extensions, clear the pipe of any obstructions that could impede the flow. Include the cost of cleaning and repairing the pipe/culvert in the bid item Pipe Conduit 42IN.

This document was originally issued and sealed by Bradley J. Koon Registration Number PE- 10268, on 08/17/16 and the original document is stored at the North Dakota Department of Transportation

STATE	PROJECT NO.	SECTION NO.	SHEET NO.
ND	NHU-3-020(074)103	165	4

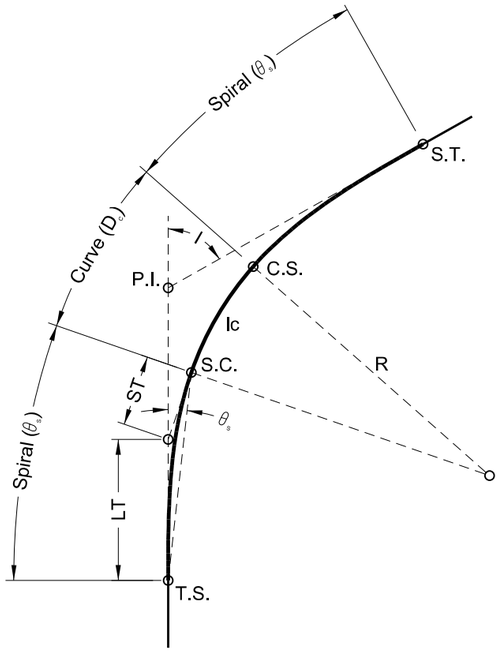

SPIRAL CURVE

θ_s = Spiral deflection angle
D_c = Degree of curvature
C.S. = Curve to spiral
I = Total deflection angle
Ic = Length of circular curve
LT = Long tangent to spiral curve
P.I. = Point of tangent intersection
R = Radius of circular curve
S.C. = Spiral to curve
S.T. = Spiral to tangent
ST = Short tangent to spiral curve
T_{sc} = Total tangent length
T.S. = Tangent to spiral

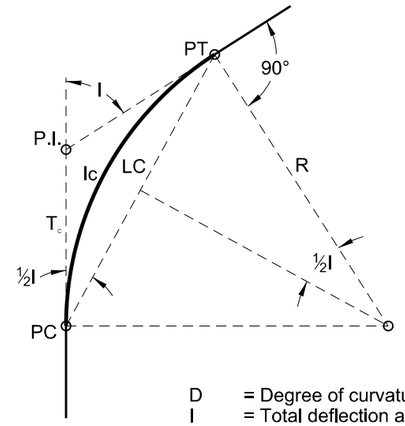

CIRCULAR CURVE

D = Degree of curvature
I = Total deflection angle
Ic = Length of circular curve
LC = Long chord
PC = Point of curvature
P.I. = Point of tangent intersection
PT = Point of tangency
R = Radius of circular curve
T_c = Tangent

HORIZONTAL CURVE DATA - CHORD DEFINITION

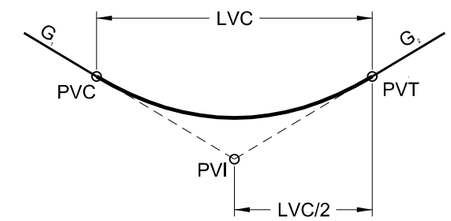

G_1 = Gradient into vertical curve (Ft per 100 Ft Station)
G_2 = Gradient out of vertical curve (Ft per 100 Ft Station)
LVC = Length of vertical curve $100(G_1-G_2)/R$
PVC = Point of vertical curvature
PVI = Point of vertical intersection
PVT = Point of vertical tangency

VERTICAL CURVE DATA

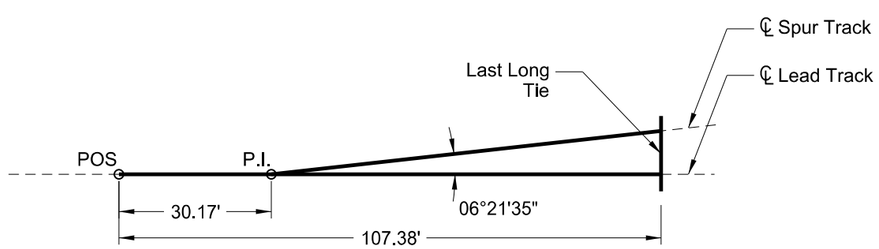

NO. 9 TURNOUT

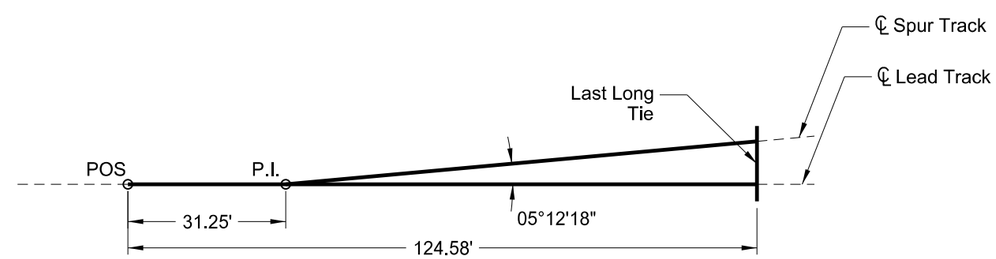

NO. 11 TURNOUT

TURNOUT GEOMETRY DEFINITIONS

This document was originally issued and sealed by Bradley J. Koon Registration Number PE-10268, on 08/15/16 and the original document is stored at the North Dakota Department of Transportation

RAILROAD GEOMETRY DETAILS

Curve & Turnout Details

STATE	PROJECT NO.	SECTION NO.	SHEET NO.
ND	NHU-3-020(074)103	165	5

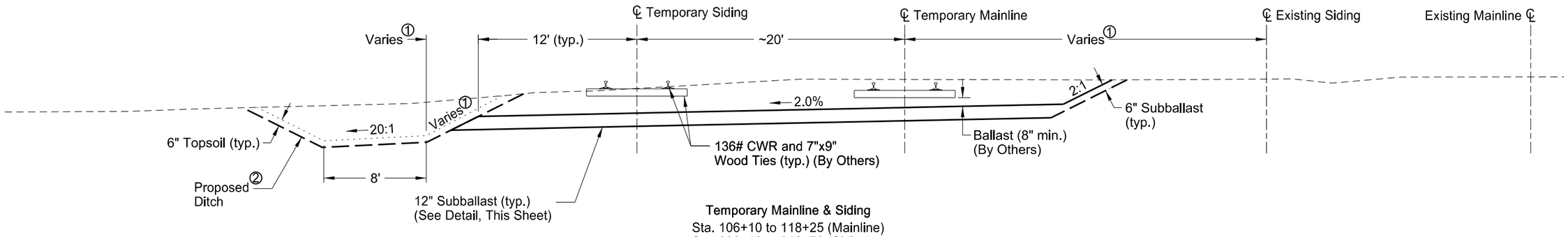

Temporary Mainline & Siding
Sta. 106+10 to 118+25 (Mainline)
Sta. 206+10 to 218+78 (Siding)

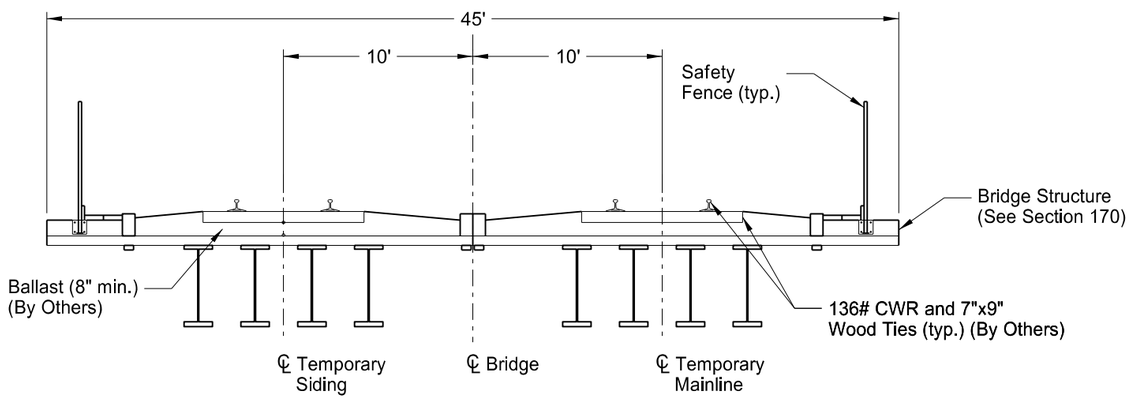

Temporary Mainline & Siding
Sta. 118+96 to 120+91 (Mainline)
Sta. 218+78 to 220+73 (Siding)

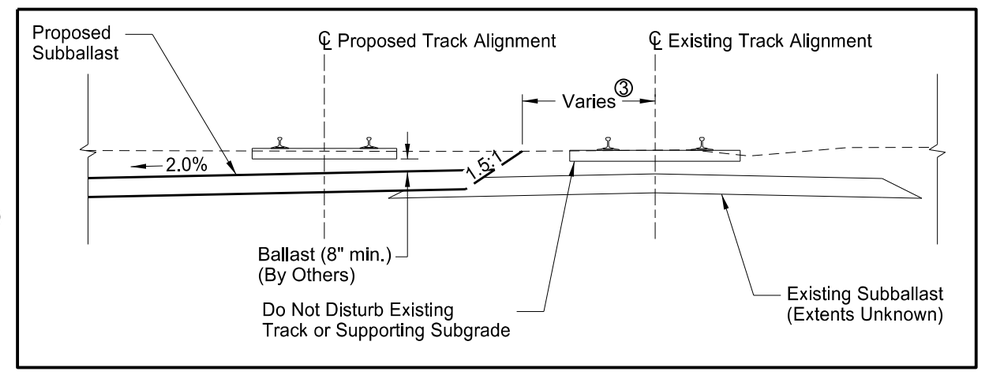

Detail: Subballast Construction Adjacent to Existing Tracks

① See cross-sections

② Ditch Extents: Sta. 206+10 to 218+00

③ Siding/Mainline Connections: 8' (min.)
Industrial Connections: 6' (min.)
See cross-sections for subballast construction.

④ Subballast with 2% crown:
Sta. 118+78 to 118+96; Sta. 120+91 to 121+00 (Mainline)
Sta. 218+78 to 220+73; Sta. 220+73 to 221+00 (Siding)
Subballast with south cross-slope:
Sta. 118+25 to 118+78; Sta. 121+00 to 121+50 (Mainline)
Sta. 221+00 to 223+00 (Siding)

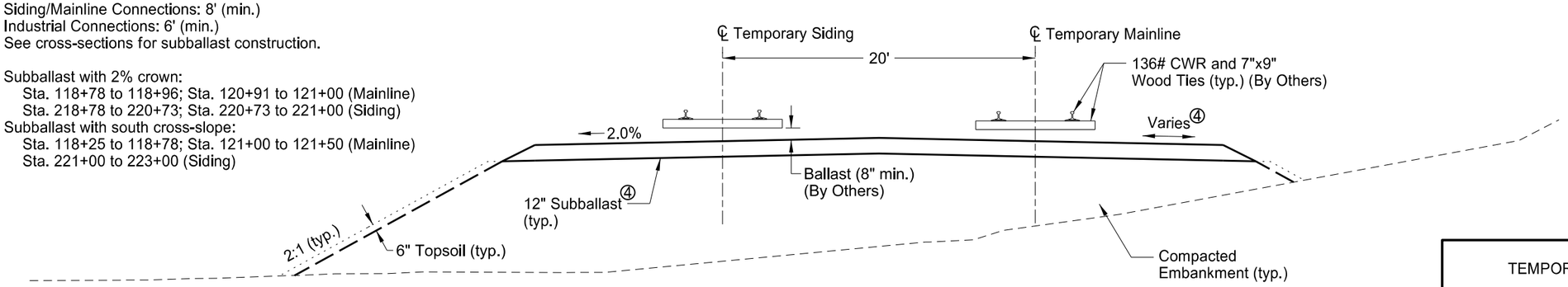

Temporary Mainline & Siding
Sta. 118+25 to 118+96; Sta. 120+91 to 121+50 (Mainline)
Sta. 220+73 to 223+00 (Siding)

This document was originally issued and sealed by Bradley J. Koon Registration Number PE-10268, on 08/15/16 and the original document is stored at the North Dakota Department of Transportation

TEMPORARY MAINLINE & SIDING

Typical Sections

STATE	PROJECT NO.	SECTION NO.	SHEET NO.
ND	NHU-3-020(074)103	165	6

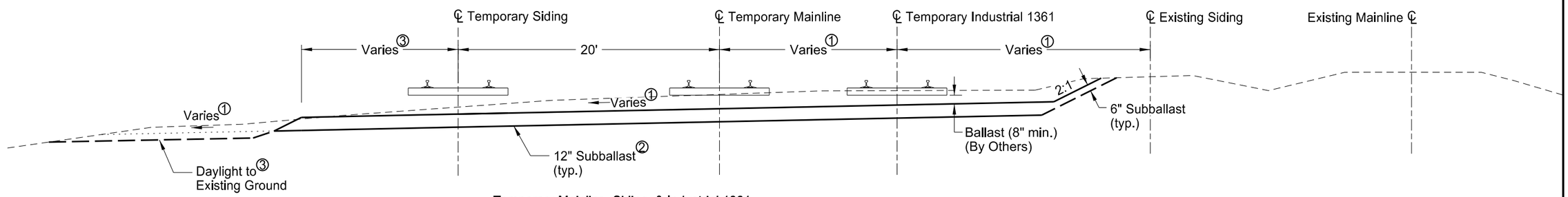

Temporary Mainline, Siding, & Industrial 1361
Sta. 121+50 to 134+58 (Mainline)
Sta. 223+00 to 234+58 (Siding)
Sta. 300+00 to 302+00 (Industrial 1361)

① See cross-sections

② Subballast extents
Mainline: 121+50 to 128+61
Siding: 223+00 to 230+68
Industrial 1361: 300+00 to 305+00
2% Crown: Sta. 302+00 to 303+75
2% Cross-slope (to the north): Sta. 303+75 to 305+00
See Detail, Sheet 5.

③ LT daylight extents: 221+50 to 229+68
(See Cross-sections & South Turnout Pad Grading Detail on Sheet 21)

④ Ditch Extents: Sta. 304+75 to 311+94

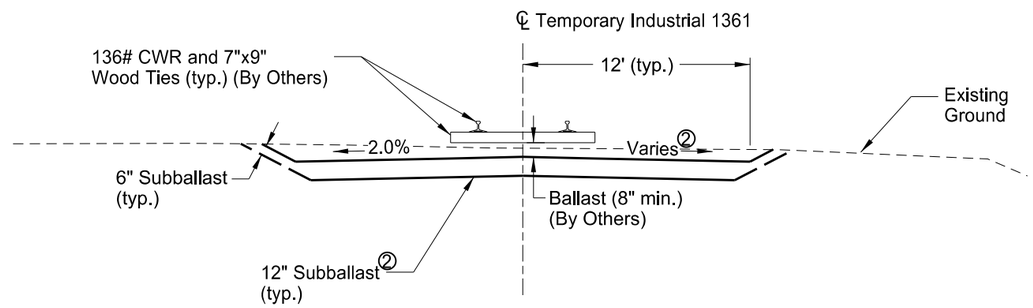

Temporary Industrial 1361
Sta. 302+00 to 304+30

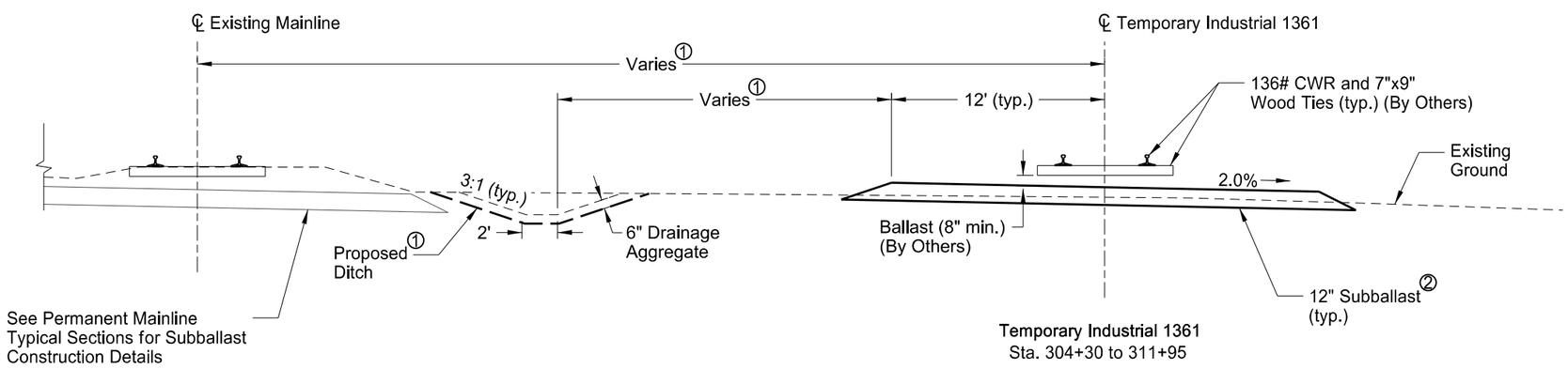

Temporary Industrial 1361
Sta. 304+30 to 311+95

This document was originally issued and sealed by Bradley J. Koon Registration Number PE-10268, on 08/15/16 and the original document is stored at the North Dakota Department of Transportation

TEMPORARY MAINLINE, SIDING, & INDUSTRIAL 1361

Typical Sections

STATE	PROJECT NO.	SECTION NO.	SHEET NO.
ND	NHU-3-020(074)103	165	7

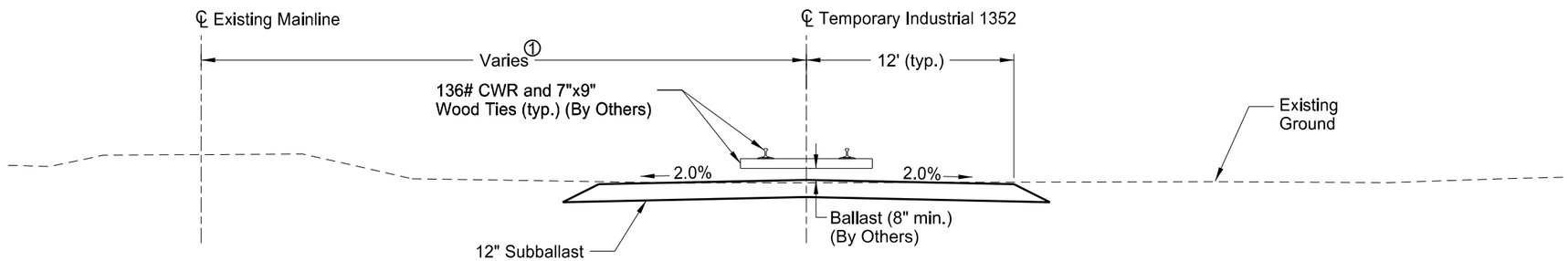

Temporary Industrial 1352
Sta. 400+00 to 401+75 ④

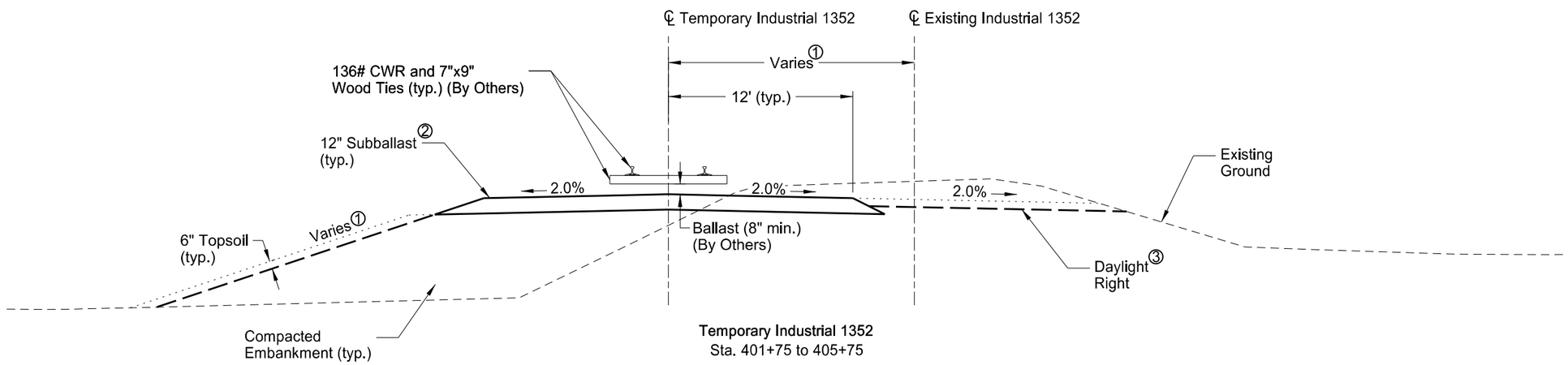

Temporary Industrial 1352
Sta. 401+75 to 405+75

① See cross-sections

② See Detail, Sheet 5.

③ Daylight Right Extents: Sta. 401+75 to 405+00

④ Sta. 400+00 to 401+75: See Industrial 1361 cross-sections.

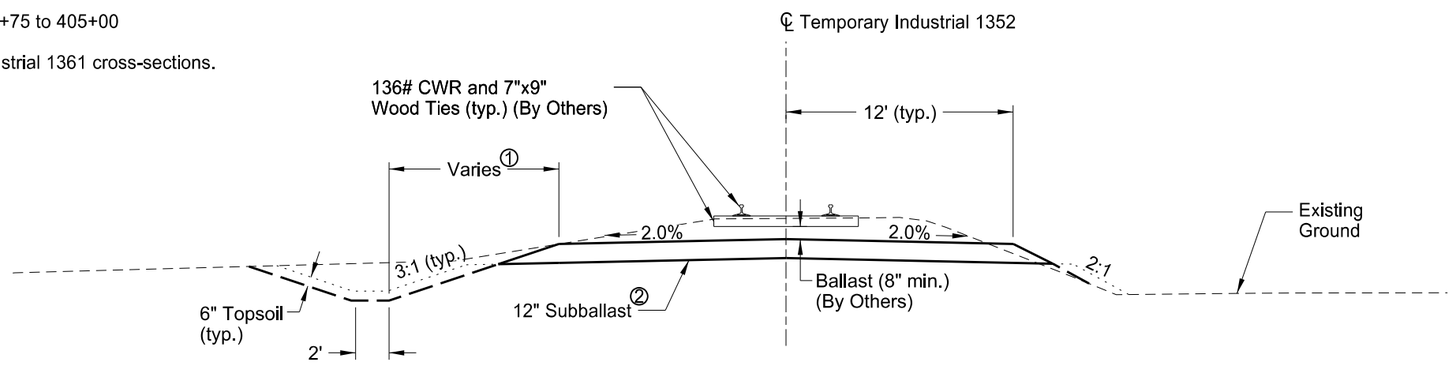

Temporary Industrial 1352
Sta. 405+75 to 406+75

This document was originally issued and sealed by Bradley J. Koon Registration Number PE-10268, on 08/15/16 and the original document is stored at the North Dakota Department of Transportation

TERMPORARY INDUSTRIAL 1352

Typical Sections

STATE	PROJECT NO.	SECTION NO.	SHEET NO.
ND	NHU-3-020(074)103	165	8

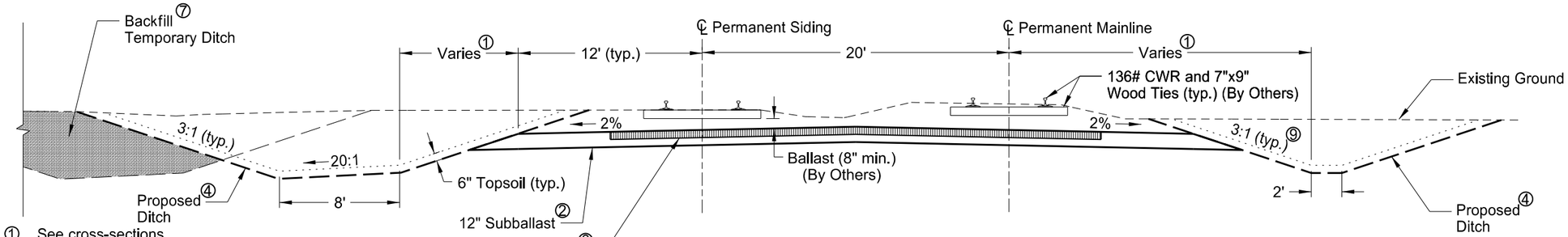

6" Commercial Grade
HMA (Place in 3, 2" Lifts)

Permanent Mainline & Siding
Sta. 500+00 to 513+38 (Mainline)
Sta. 600+00 to 613+20 (Siding)

① See cross-sections

② Subballast extents
Mainline: Sta. 511+88 to 513+38; Sta. 515+40 to 518+50
Siding: Sta. 611+70 to 613+20; Sta. 615+22 to 618+50
Industrial 1361: Sta. 800+00 to 803+62

③ HMA construction extents (See detail, Sheet 18)
Mainline: Sta. 512+58 to 513+37; Sta. 515+41 to 517+12
Siding: Sta. 612+39 to 613+19; Sta. 615+23 to 616+22
Industrial 1361: Sta. 800+00 to 801+33

④ Ditch extents
LT Ditch: Sta. 600+00 to 612+00
RT Ditch: Sta. 506+00 to 514+04
Between Mainline & Industrial 1361:
Sta. 802+25 to 805+00
See Permanent Industrial 1361 cross-sections for mainline subballast connection details outside of ditch limits.

⑤ LT Daylight: Sta. 615+20 to 616+22

⑥ Place aggregate Base Course CL 5 following Industrial 1361 tamping work (tamping by others) to allow for placement on top of new ballast. Aggregate Base Course CL 5 extents: Sta. 803+50 to 811+35

⑦ Backfill all temporary ditches and remove temporary track embankments as shown in the cross-sections.

⑧ See North Turnout Pad Grading Detail, Sheet 16

⑨ Sta. 508+10 to 511+35: Steepen north ditch side slopes to avoid conflict with existing builiding foundations as necessary. Maintain 4' (min.) offset.

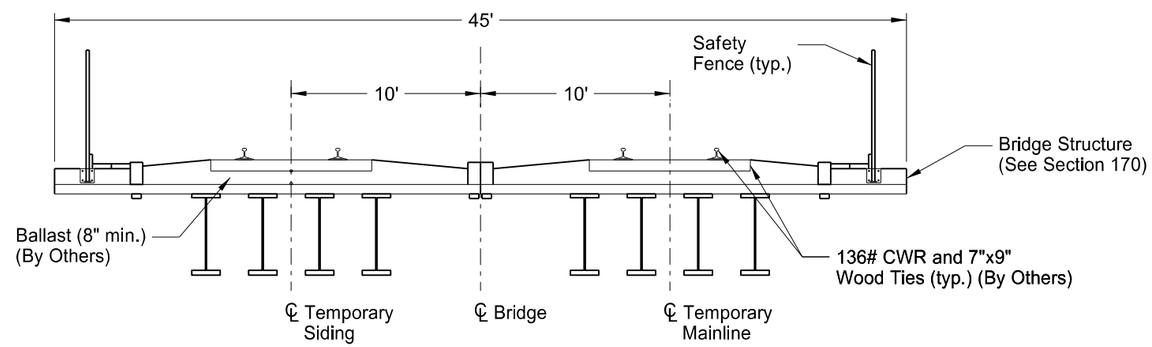

Permanent Mainline & Siding
Sta. 513+38 to 515+40 (Mainline)
Sta. 613+20 to 615+22 (Siding)

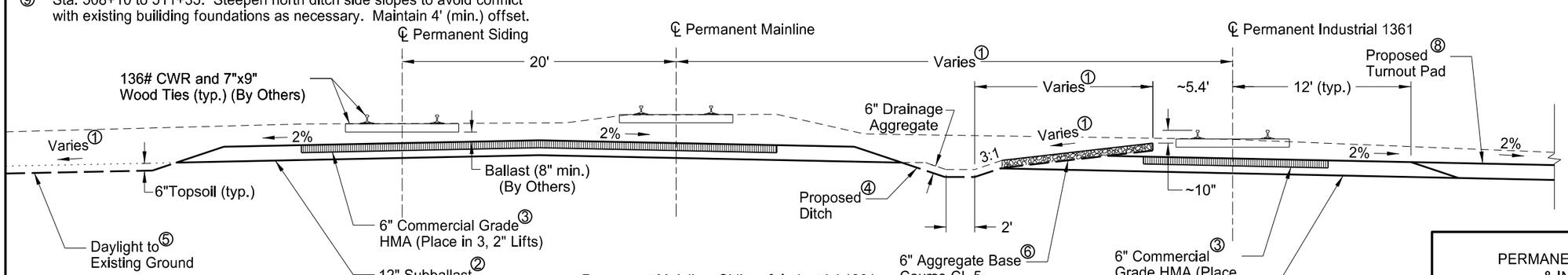

Permanent Mainline, Siding, & Industrial 1361
Sta. 511+88 to 513+38; Sta. 515+40 to 518+50 (Mainline)
Sta. 611+70 to 613+20; Sta. 615+23 to 618+50 (Siding)
Sta. 800+00 to 811+35 (Industrial 1361)

This document was originally issued and sealed by Bradley J. Koon Registration Number PE-10268, on 08/15/16 and the original document is stored at the North Dakota Department of Transportation

PERMANENT SIDING, MAINLINE, & INDUSTRIAL 1361

Typical Sections

STATE	PROJECT NO.	SECTION NO.	SHEET NO.
ND	NHU-3-020(074)103	165	9

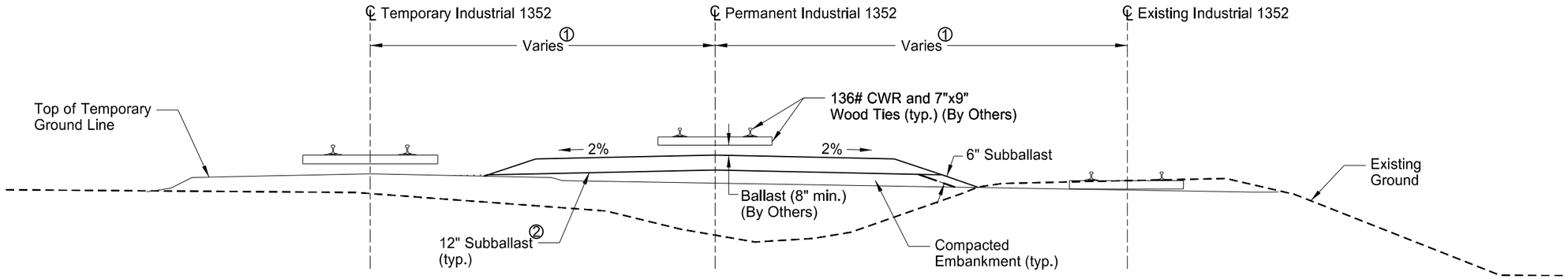

Permanent Industrial 1352
Sta. 900+00 to 902+75 ④

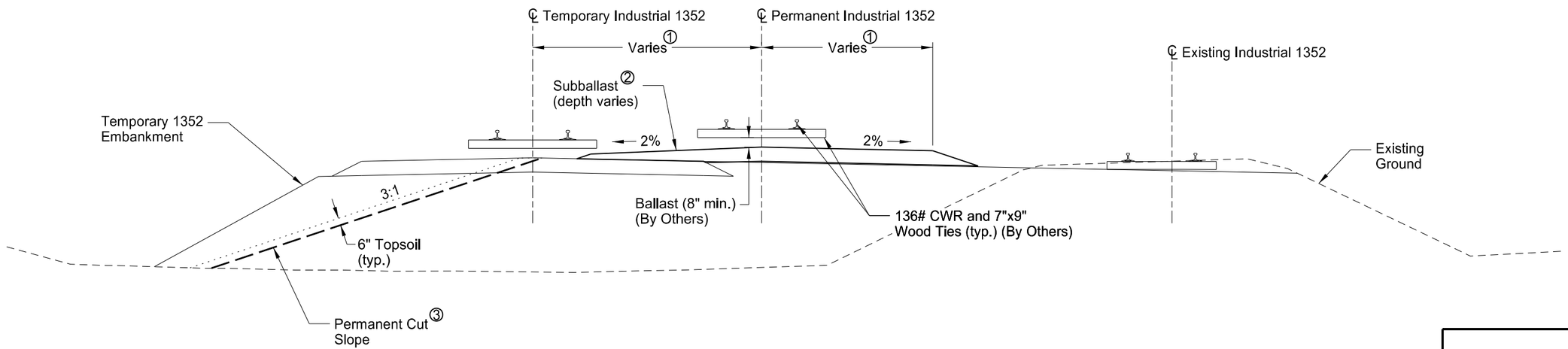

Permanent Industrial 1352
Sta. 902+75 to 905+75

① See cross-sections

② Subballast (see cross-sections for additional information):
a. Extents: Sta. 900+00 to 904+75
b. See Detail, Sheet 5.
c. Where subballast is being constructed within the existing or temporary railroad corridors, place material directly on existing subballast. Do not disturb the existing railroad bed unless shown on the plans or directed by field personnel.

③ Permanent cut slope extents vary, see cross-sections.

④ See Permanent Industrial 1361 cross-sections.

This document was originally issued and sealed by Bradley J. Koon Registration Number PE-10268, on 08/15/16 and the original document is stored at the North Dakota Department of Transportation

PERMANENT INDUSTRIAL 1352

Typical Sections

STATE	PROJECT NO.	SECTION NO.	SHEET NO.
ND	NHU-3-020(074)103	165	10

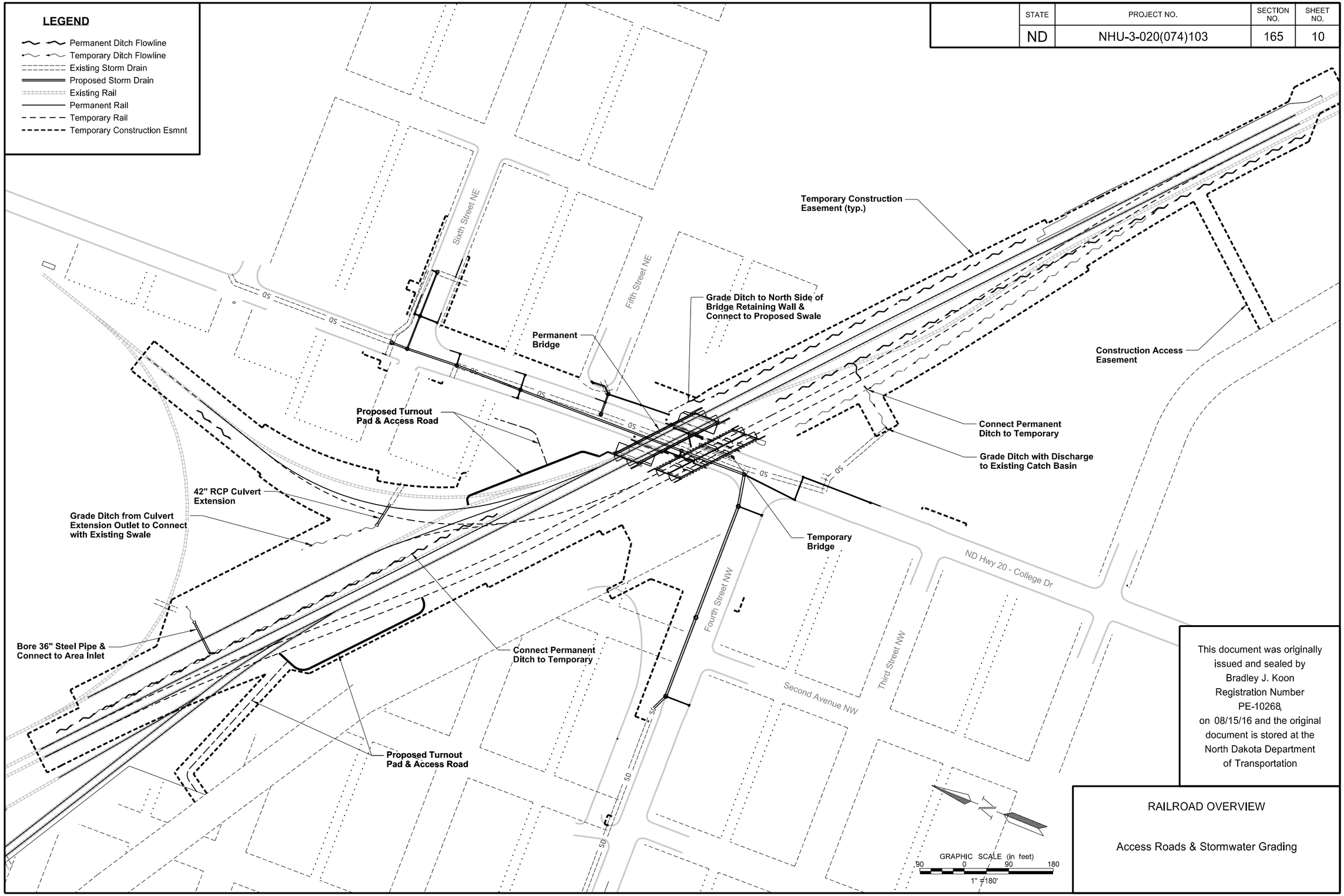

This document was originally issued and sealed by Bradley J. Koon Registration Number PE-10268, on 08/15/16 and the original document is stored at the North Dakota Department of Transportation

RAILROAD OVERVIEW

Access Roads & Stormwater Grading

8/12/2016 1:34:34 PM scottpfahler J:\trans\5211102\CADD\30020103.074\Design\Plans\165\165_DTL_grading plan.dgn

STATE	PROJECT NO.	SECTION NO.	SHEET NO.
ND	NHU-3-020(074)103	165	11

RAILROAD CONSTRUCTION SEQUENCING

EXISTING TO TEMPORARY OPERATION

Phase	Description	Location			Responsible Party
		Station Begin	Station End	Reference Alignment	
1a	Construct south turnout pad & associated access road				Contractor
	Construct temporary bridge				Contractor
	Construct temporary Amtrak passenger platform	106+10		Temporary Mainline	Contractor
	Remove Industrial tracks on south side of Siding, east of bridge	206+10	218+50	Temporary Siding	BNSF
	Remove industrial tracks on south side of Siding, west of bridge. Remove and stockpile two turnouts from Siding. Replace turnouts with straight track panels. Remove and scrap #9 inudstrial turnout.	621+80	626+00	Permanent Siding	BNSF
1b	Install subballast for Temporary Siding up to intersection of west industrial tracks	210+50	230+70	Temporary Siding	Contractor
	Install subballast for Temporary Mainline up to intersection of west industrial tracks	112+25	128+75	Temporary Mainline	
	Install 42" RCP culvert extension beneath Temporary Industrial 1352	402+41		Temporary Industrial 1352	
	Construct subballast for temporary industrials & a section of Permanent Industrial 1361 up to Mainline, Siding, & industrial intersections	300+00	302+30	Temporary Industrial 1361	
		303+75	305+00	Temporary Industrial 1361	
		400+50	401+30	Temporary Industrial 1352	
		401+60	406+00	Temporary Industrial 1352	
2a	Install ballast, ties, & rail for Temporary Siding up to swing point	209+13	231+69	Temporary Siding	BNSF
	Install ballast, ties, & rail for Temporary Mainline up to intersection of existing Siding track	111+71	129+29	Temporary Mainline	
	Place & weld new #11 turnout on Temporary Mainline	121+44		Temporary Mainline	
	Install Temporary Industrial 1361 ballast, ties, & rail between Temporary Mainline & exisiting Siding	300+00	302+45	Temporary Industrial 1360	
	Install ballast, ties, & rail for Temporary Industrial 1352 north of existing Industrial 1361	401+51	405+01	Temporary Industrial 1352	
3a	Cut existing Siding & swing to temporary alignment on east & west side of bridge. Tamp existing rail to proposed elevations.	206+10	209+13	Temporary Siding	BNSF
		231+69	234+58	Temporary Siding	
Temporary Siding in Service					
4a	Remove existing Siding for construction of Temporary Mainline.	110+69	111+71	Temporary Mainline	BNSF
		129+28	130+41	Temporary Mainline	
4b	Install ballast, ties, & rail for Temporary Mainline where siding track was cut	109+42	111+71	Temporary Mainline	BNSF
		129+28	131+73	Temporary Mainline	
4c	Cut existing Mainline & swing to temporary alignment on east & west side of bridge. Tamp existing rail to proposed elevations.	106+10	109+42	Temporary Mainline	BNSF
		131+73	134+58	Temporary Mainline	
Temporary Mainline in Service					
5a	Remove existing Mainline & Siding (ties & rail) for construction of Temporary Industrial 1361 & 1352	616+74	618+75	Permanent Siding	BNSF
		517+51	519+31	Permanent Mainline	
5b	Construct subballast for Temporary Industrial 1361 & 1352 through existing Mainline & Siding	302+30	303+75	Temporary Industrial 1361	Contractor
		400+00	400+50	Temporary Industrial 1352	
5c	Install ballast, ties, & rail for Temporary Industrial 1361 through existing Mainline & Siding. Place & weld Temporary Industrial 1361 #9 turnout.	302+30	303+75	Temporary Industrial 1361	BNSF
5d	Cut & swing Temporary Industrial 1361 to temporary alignment. Tamp existing rail to proposed elevations	304+98	311+95	Temporary Industrial 1361	BNSF
Temporary Industrial 1361 in Service					
6a	Remove existing Industrial 1361 for construction of Temporary Industrial 1352	401+27	402+07	Temporary Industrial 1352	BNSF
6b	Install ballast, ties, & rail for Temporary Industrial 1352 through existing Industrial 1361	400+78	401+51	Temporary Industrial 1352	BNSF
6c	Cut & swing Temporary Industrial 1352 to temporary alignment. Tamp existing rail to proposed elevations.	405+01	408+20	Temporary Industrial 1352	BNSF
Temporary Industrial 1352 in Service					
6d	Complete temporary grading				Contractor
	Construct north turnout pad & associated access road				

TEMPORARY TO PERMANENT OPERATION

Phase	Description	Location			Responsible Party
		Station Begin	Station End	Reference Alignment	
7a	Remove existing disconnected tracks	611+69	617+71	Permanent Siding	BNSF
		511+88	518+19	Permanent Mainline	
				Existing Industrial 1361	
				Existing Industrial 1352	
	Remove existing bridge & build new permanent bridge				Contractor
	Construct permanent Amtrak passenger platform	505+00		Permanent Mainline	By Others

TEMPORARY TO PERMANENT OPERATION (CONTINUED)

7b	Install area inlet between Mainline & Industrial 1361 & bore culvert beneath Industrial 1361	808+75		Permanent Industrial 1361	Contractor
	Backfill bridge foundation & construct Permanent Mainline & Siding subballast. Place HMA on each side of bridge to the extents shown on the plans.	511+88	513+38	Permanent Mainline	
		515+40	518+50	Permanent Mainline	
		611+70	613+20	Permanent Siding	
		615+23	618+50	Permanent Siding	
	Construct Permanent Industrial 1361 subballast up to intersection of Temporary Industrial 1352 & Temporary Industrial 1361	800+00	803+05	Permanent Industrial 1361	
	Construct Permanent Industrial 1352 subballast up to intersection of Temporary Industrial 1352	900+00	904+82	Permanent Industrial 1352	
7c	Install Permanent Siding track ballast, ties, & rail over permanent bridge extending to limits of removed rail	611+69	617+71		BNSF
	Tamp Permanent Siding track east of bridge & west of Temporary Industrial 1352	605+60	611+69	Permanent Siding	
		618+02	621+53	Permanent Siding	
	Install Permanent Mainline track ballast, ties, & rail over permanent bridge extending to limits of removed rail	511+88	518+19	Permanent Mainline	
	Tamp Permanent Mainline track east of bridge & west of Temporary Industrial 1352	503+32	511+88	Permanent Mainline	
		518+55	525+58	Permanent Mainline	
	Reinstall stockpiled #11 Permanent Mainline turnout	515+78		Permanent Mainline	
	Install ties & rail for Permanent Industrial 1361 up to intersection of Temporary Industrial 1352	800+00	803+05	Permanent Industrial 1361	
	Install new #9 Permanent Industrial 1361 turnout	801+25		Permanent Industrial 1361	
	Install ties & rail for Permanent Industrial 1352 up to swing point of Temporary Industrial 1352	900+00	904+82	Permanent Industrial 1352	
7d	Remove temporary industrial ties & rail to install Permanent Mainline & Permanent Siding	302+45	303+32	Temporary Industrial 1361	BNSF
	Remove Temporary Industrial 1361 #9 turnout & stockpile	302+80		Temporary Industrial 1361	
7e	Construct subballast & install Mainline ballast, ties, & rail through temporary industrials	518+19	518+50	Permanent Mainline	BNSF
7f	Cut & swing Temporary Mainline to permanent alignment. Install Permanent Mainline ballast, ties, & rail at east & west connections. Tamp existing rail to proposed elevations.	500+00	503+32	Permanent Mainline	BNSF
		525+58	531+15	Permanent Mainline	
Permanent Mainline in Service					
8a	Remove Temporary Industrial 1352 ties & rail through Permanent Industrial 1361 intersection	400+88	401+16	Temporary Industrial 1361	BNSF
8b	Cut & swing Temporary Industrial 1361 to permanent alignment. Install Permanent Industrial 1361 ballast, ties, & rail at connection.	803+62	805+16	Permanent Industrial 1361	BNSF
Permanent Industrial 1361 in Service					
8c	Cut & swing Temporary Industrial 1361 to permanent alignment. Install Permanent Industrial 1361 ballast, ties, & rail at connection	904+82	905+93	Permanent Industrial 1352	BNSF
Permanent Industrial 1352 in Service					
9a	Construct subballast & install Permanent Siding ballast, ties, & rail through gap where temporary industrials were removed	617+71	618+50	Permanent Siding	BNSF
9b	Remove all temporary tracks				BNSF
9c	Cut & swing Temporary Siding to permanent alignment. Install Permanent Siding ballast, ties, & rail at east & west connections.	600+00	603+03	Permanent Siding	BNSF
		625+54	628+43	Permanent Siding	
Permanent Siding in Service					
10a	Complete permanent grading				Contractor
10b	Remove temporary bridge & temporary Amtrak passenger platform				Contractor

NOTES

1. Stationing is for reference only. See cross-sections & typical sections for additional information.
2. Coordinate with BNSF personnell prior to all construction activities. The sequence of construction activities is subject to change.

This document was originally issued and sealed by Bradley J. Koon Registration Number PE-10268, on 08/15/16 and the original document is stored at the North Dakota Department of Transportation

RAILROAD CONSTRUCTION SEQUENCING

Sequence Table

STATE	PROJECT NO.	SECTION NO.	SHEET NO.
ND	NHU-3-020(074)103	165	12

LEGEND

- Phase 1a Track Removal
- Phase 1b Subballast Construction
- Phase 2a Ballast, Ties, & Rail
- Phase 3a Cut & Swing Siding to Temporary Alignment
- Phase 4a Track Removal
- Phase 4b Ballast, Ties, & Rail
- Phase 4c Cut & Swing Mainline to Temporary Alignment
- Phase 5a Track Removal
- Phase 5b Subballast Construction
- Phase 5c Ballast, Ties, & Rail
- Phase 5d Cut & Swing Industrial 1361 to Temporary Alignment
- Phase 6a Track Removal
- Phase 6b Ballast, Ties, & Rail
- Phase 6c Cut & Swing Industrial 1352 to Temporary Alignment
- Phase 6d Temporary Ditch Flowline

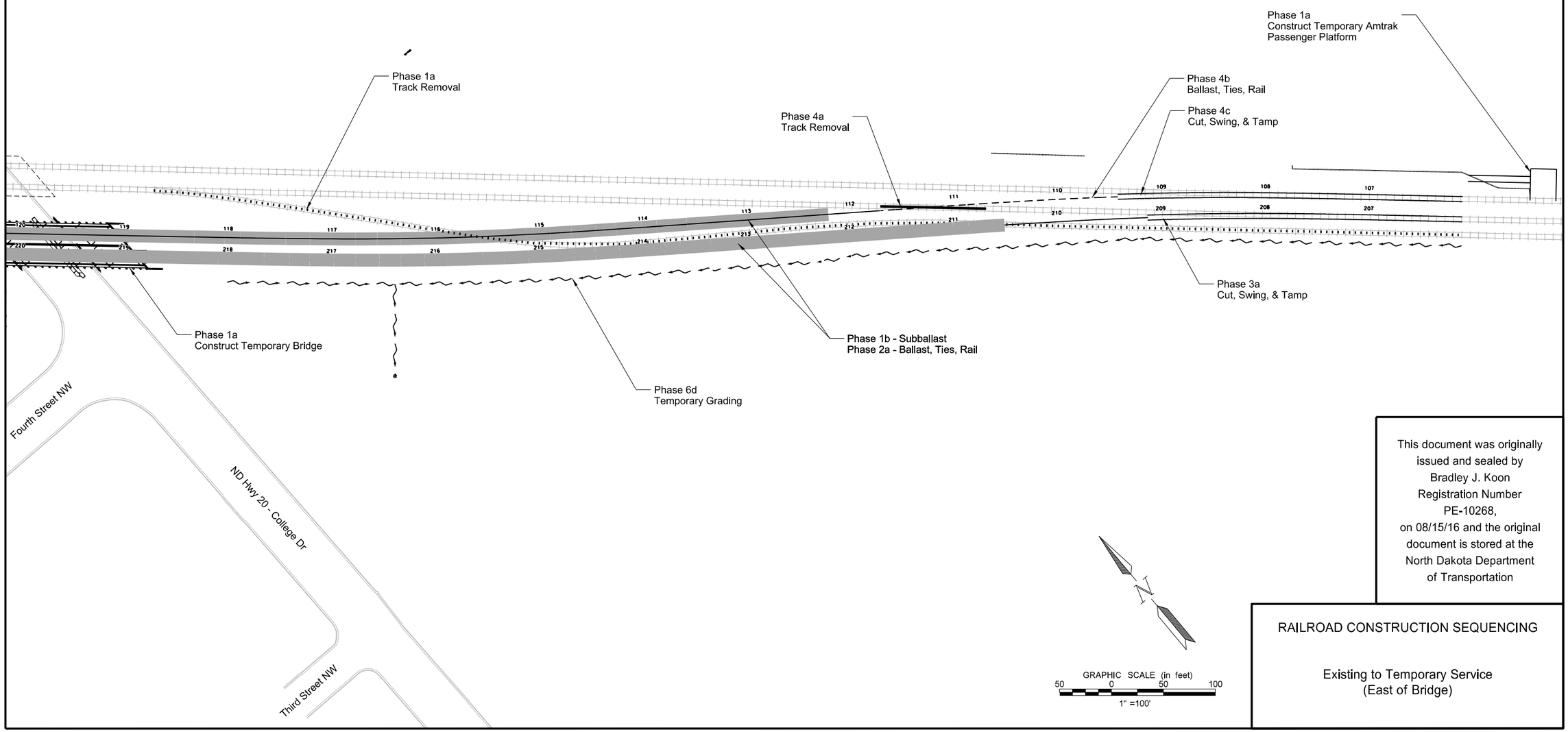

This document was originally issued and sealed by Bradley J. Koon Registration Number PE-10268, on 08/15/16 and the original document is stored at the North Dakota Department of Transportation

RAILROAD CONSTRUCTION SEQUENCING

Existing to Temporary Service
(East of Bridge)

STATE	PROJECT NO.	SECTION NO.	SHEET NO.
ND	NHU-3-020(074)103	165	13

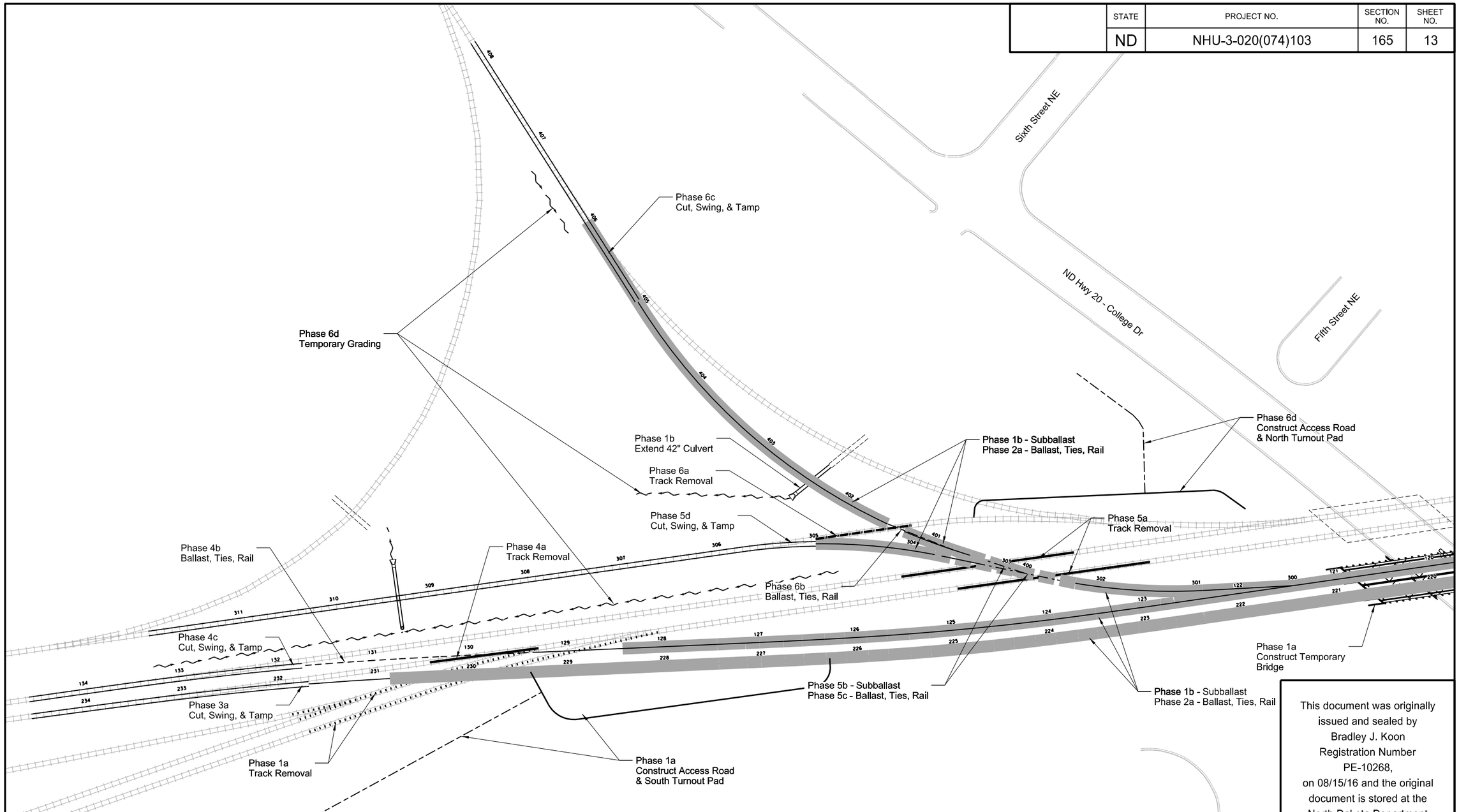

LEGEND

- Phase 1a Track Removal
- Phase 1b Subballast Construction
- Phase 2a Ballast, Ties, & Rail
- Phase 3a Cut & Swing Siding to Temporary Alignment
- Phase 4a Track Removal
- Phase 4b Ballast, Ties, & Rail
- Phase 4c Cut & Swing Mainline to Temporary Alignment
- Phase 5a Track Removal
- Phase 5b Subballast Construction
- Phase 5c Ballast, Ties, & Rail
- Phase 5d Cut & Swing Industrial 1361 to Temporary Alignment
- Phase 6a Track Removal
- Phase 6b Ballast, Ties, & Rail
- Phase 6c Cut & Swing Industrial 1352 to Temporary Alignment
- Phase 6d Temporary Ditch Flowline

GRAPHIC SCALE (in feet)
50 0 50 100
1" =100'

This document was originally issued and sealed by Bradley J. Koon Registration Number PE-10268, on 08/15/16 and the original document is stored at the North Dakota Department of Transportation

RAILROAD CONSTRUCTION SEQUENCING

Existing to Temporary Service
(West of Bridge)

STATE	PROJECT NO.	SECTION NO.	SHEET NO.
ND	NHU-3-020(074)103	165	14

LEGEND

- Phase 7a Track Removal
- Phase 7b Subballast Construction
- Phase 7c Ballast, Ties, & Rail
- Phase 7c Tamp Existing Tracks
- Phase 7d Track Removal
- Phase 7e Ballast, Ties, & Rail
- Phase 7f Cut & Swing Mainline to Permanent Alignment
- Phase 8a Track Removal
- Phase 8b Cut & Swing Industrial 1361 to Permanent Alignment
- Phase 8c Cut & Swing Industrial 1352 to Permanent Alignment
- Phase 9a Ballast, Ties, & Rail
- Phase 9b Track Removal
- Phase 9c Cut & Swing Siding to Permanent Alignment
- Phase 10a Permanent Grading

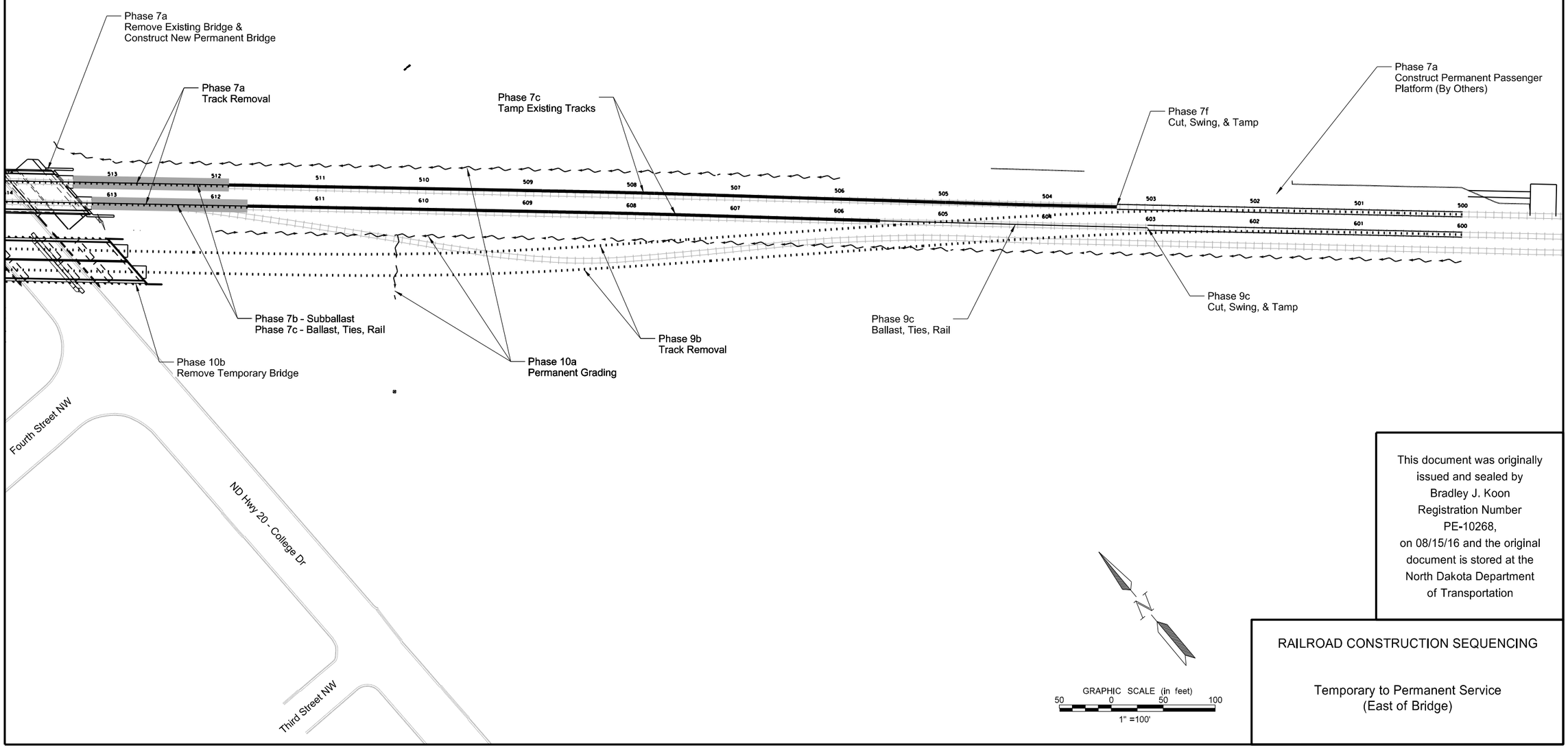

This document was originally issued and sealed by Bradley J. Koon Registration Number PE-10268, on 08/15/16 and the original document is stored at the North Dakota Department of Transportation

RAILROAD CONSTRUCTION SEQUENCING

Temporary to Permanent Service
(East of Bridge)

STATE	PROJECT NO.	SECTION NO.	SHEET NO.
ND	NHU-3-020(074)103	165	15

LEGEND

- Phase 7a Track Removal
- Phase 7b Subballast Construction
- Phase 7c Ballast, Ties, & Rail
- Phase 7c Tamp Existing Tracks
- Phase 7d Track Removal
- Phase 7e Subballast, Ballast, Ties, & Rail
- Phase 7f Cut & Swing Mainline to Permanent Alignment
- Phase 8a Track Removal
- Phase 8b Cut & Swing Industrial 1361 to Permanent Alignment
- Phase 8c Cut & Swing Industrial 1352 to Permanent Alignment
- Phase 9a Subballst, Ballast, Ties, & Rail
- Phase 9b Track Removal
- Phase 9c Cut & Swing Siding to Permanent Alignment
- Phase 10a Permanent Grading

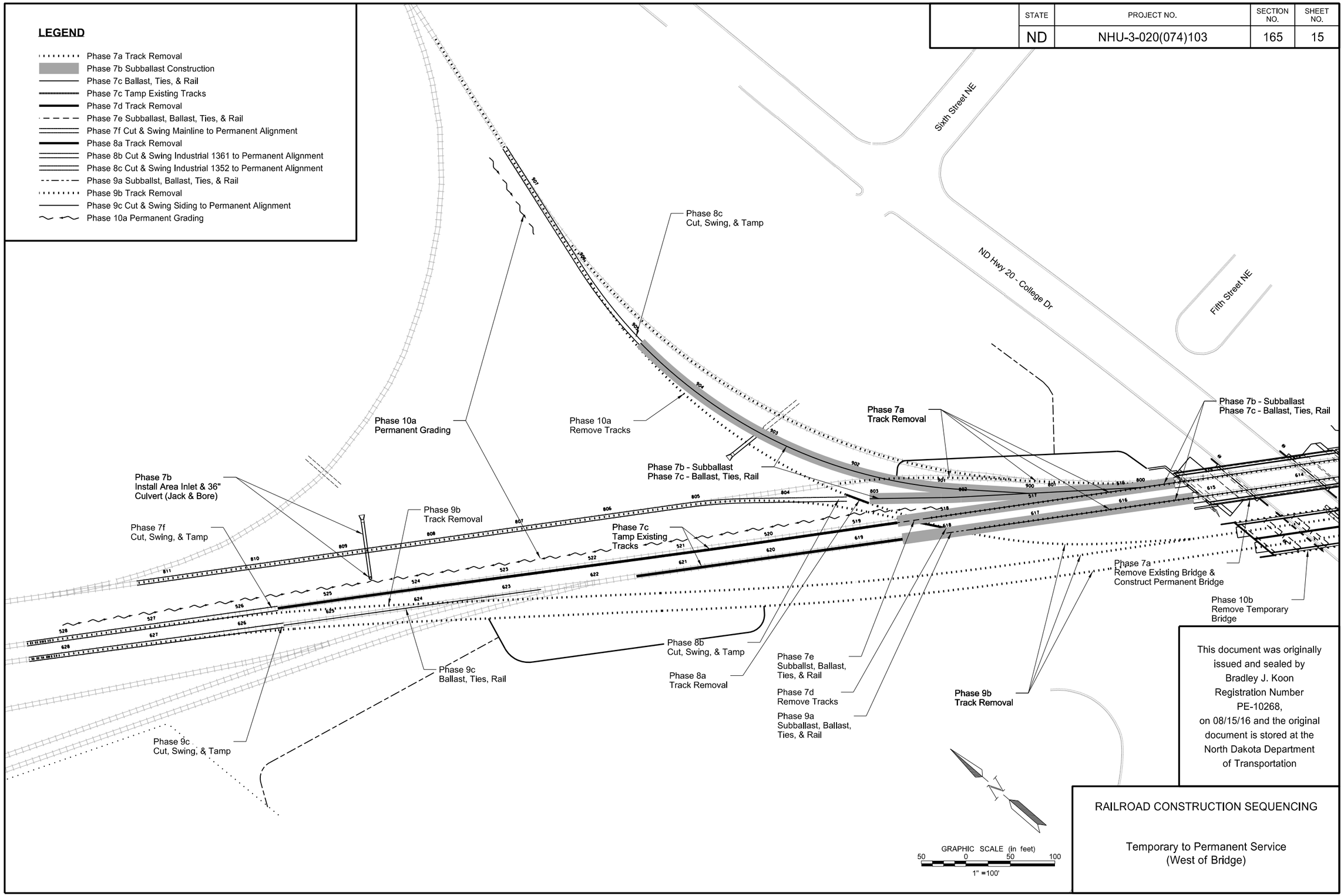

This document was originally issued and sealed by Bradley J. Koon Registration Number PE-10268, on 08/15/16 and the original document is stored at the North Dakota Department of Transportation

RAILROAD CONSTRUCTION SEQUENCING

Temporary to Permanent Service
(West of Bridge)

STATE	PROJECT NO.	SECTION NO.	SHEET NO.
ND	NHU-3-020(074)103	165	16

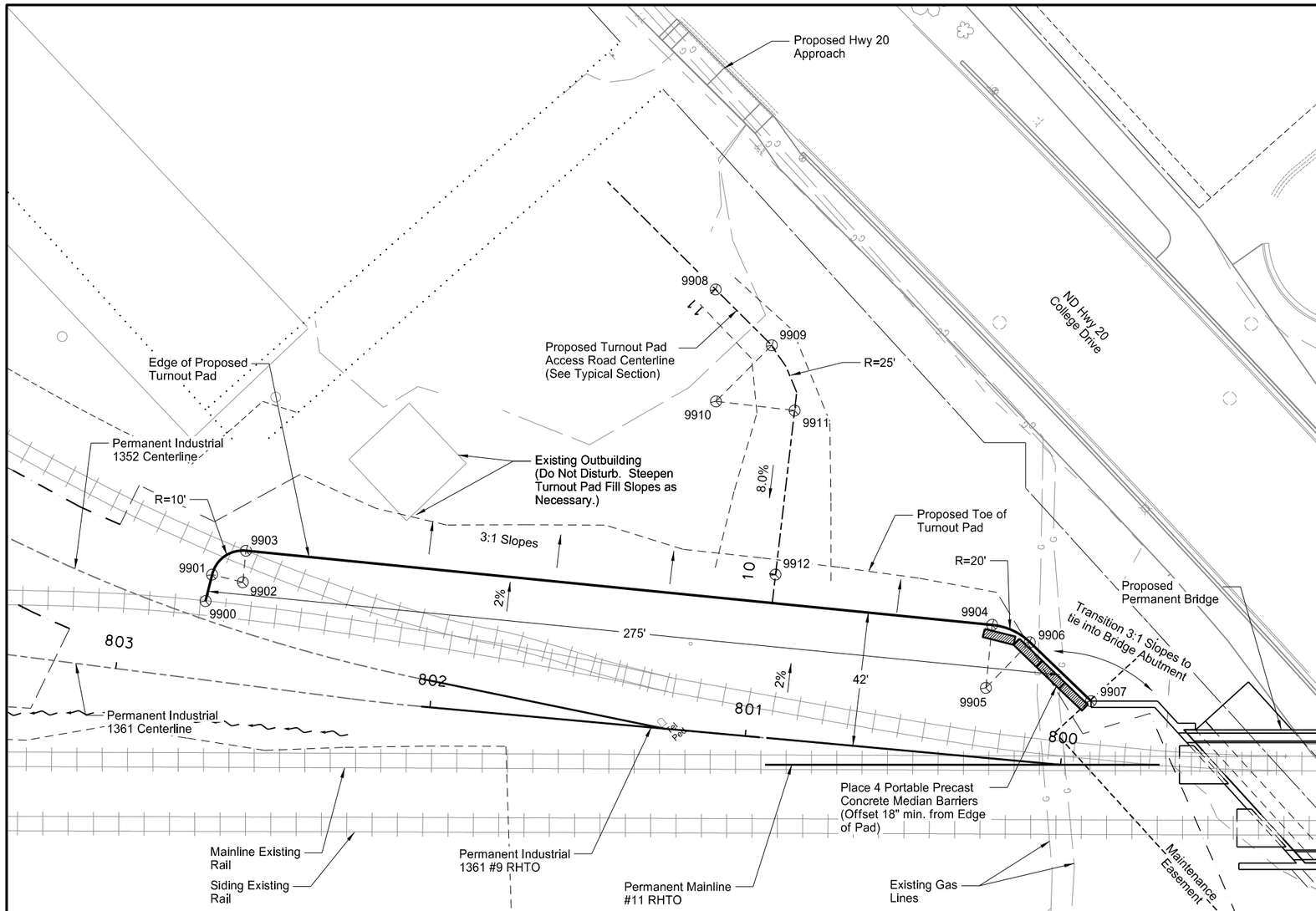

Plan View

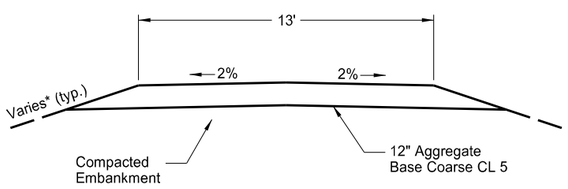

Access Road Typical Section

* Sta. 10+00 to 10+75: 3:1 slopes
Sta. 10+75 to 11+00: 25:1 slopes (extend Aggregate Base Course CL 5 to fill limits)

Coordinate Table

POINT	NORTHING	EASTING	STATION	OFFSET
9900	410368.468	2367877.061	518+48.26	51.72
9901	410373.415	2367884.084	518+46.20	60.06
9902	410372.103	2367889.842	518+36.49	57.66
9903	410372.103	2367897.114	518+35.51	67.61
9904	410199.872	2368059.676	515+99.83	44.18
9905	410186.144	2368045.131	516+01.81	24.28
9906	410187.926	2368065.052	515+87.64	38.69
9907	410161.202	2368067.442	515+68.61	20.08
9908	410385.244	2368059.694	517+21.38	184.15
9909	410312.185	2368065.05	516+69.43	132.50
9910	410310.357	2368040.117	516+87.05	114.77
9911	410291.895	2368056.975	516+62.22	111.89
9912	410256.722	2368018.456	516+68.23	60.74

NOTES

1. Connect turnout pads to the proposed railroad embankment at the top of the subballast material. Extend the top of the pad from the rail embankment as specified on this detail.
2. Install turnout pad fill material consisting of compacted embankment with 12" of Aggregate Base Course CL 5 for surfacing.

GRAPHIC SCALE (in feet)
20 0 20 40
1" = 40'

This document was originally issued and sealed by Bradley J. Koon Registration Number PE-10268, on 08/15/16 and the original document is stored at the North Dakota Department of Transportation

RAILROAD GRADING

North Turnout Pad

STATE	PROJECT NO.	SECTION NO.	SHEET NO.
ND	NHU-3-020(074)103	165	17

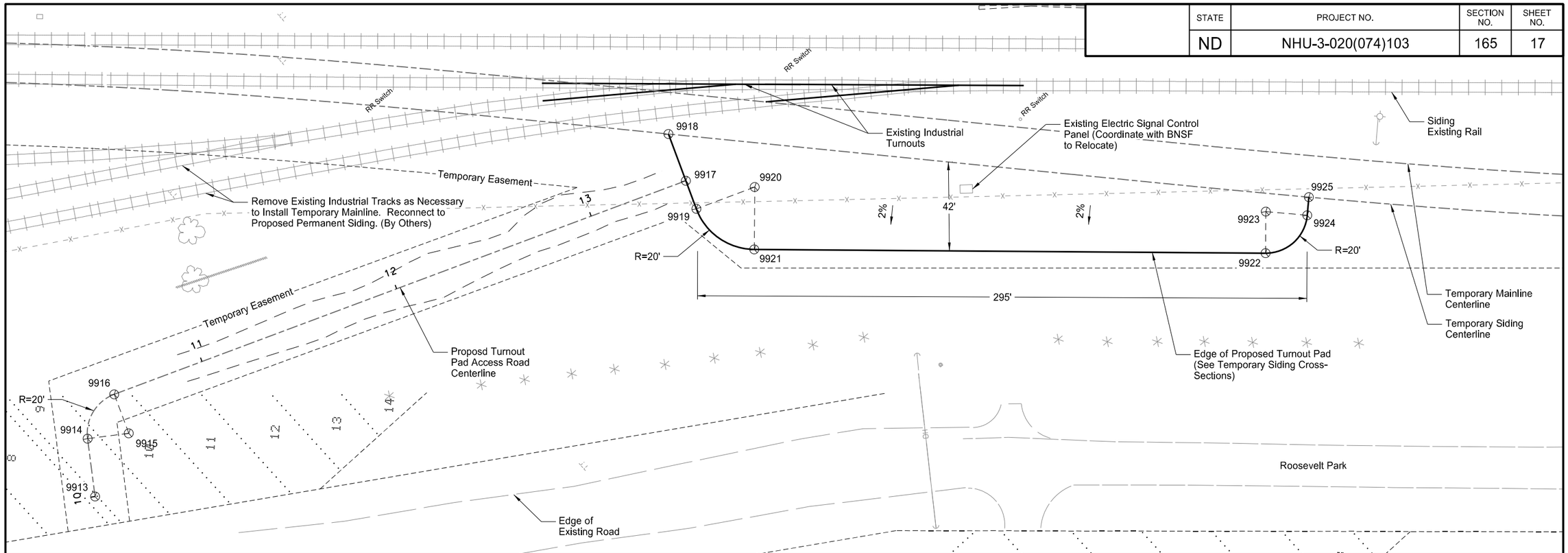

Plan View

NOTES

1. Connect turnout pads to the proposed railroad embankment at the top of the subballast material. Extend the top of the pad from the rail embankment as specified on this detail.
2. Install turnout pad fill material consisting of compacted embankment with 12" of Aggregate Base Course CL 5 for surfacing.

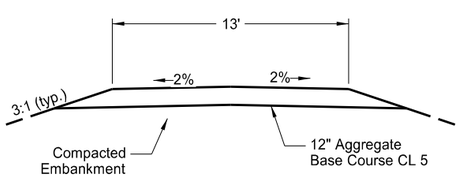

Access Road Typical Section

Access Road Profile Table

STATION	ELEVATION	NORTHING	EASTING	DESCRIPTION
11+00.00	1,444.41	410675.711	2367215.134	BEGIN
12+25.00	1,448.03	410631.926	2367332.215	VPI - 53.52' RADIUS
13+24.00	1,455.95	410597.248	2367424.943	VPI - 20.34' RADIUS
13+48.66	1,456.25	410588.609	2367448.042	END

Coordinate Table

POINT	NORTHING	EASTING	STATION	OFFSET
9913	410660.455	2367133.717	232+05.82	-197.17
9914	410683.832	2367149.233	232+11.18	-169.56
9915	410672.772	2367165.897	231+90.29	-165.93
9916	410691.505	2367172.902	231+98.78	-147.61
9917	410588.609	2367448.042	229+28.38	-21.56
9918	410611.106	2367456.456	229+38.98	0.00
9919	410573.254	2367442.3	229+21.15	-36.27
9920	410566.248	2367461.033	229+03.20	-27.45
9921	410551.010	2367448.078	229+01.00	-47.33
9922	410397.146	2367629.063	226+65.00	-21.35
9923	410412.384	2367642.017	266+67.10	-1.46
9924	410397.936	2367655.847	226+47.10	-1.43
9925	410398.922	2367656.878	2226+47.10	0.00

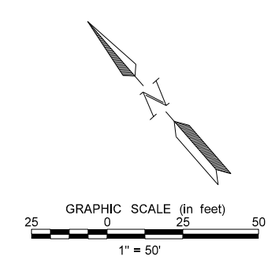

This document was originally issued and sealed by Bradley J. Koon Registration Number PE-10268, on 08/15/16 and the original document is stored at the North Dakota Department of Transportation

RAILROAD GRADING

South Turnout Pad

STATE	PROJECT NO.	SECTION NO.	SHEET NO.
ND	NHU-3-020(074)103	165	18

NOTES

1. Place 6" Commercial Grade HMA to the extents shown on this detail. See specifications for HMA mix details.

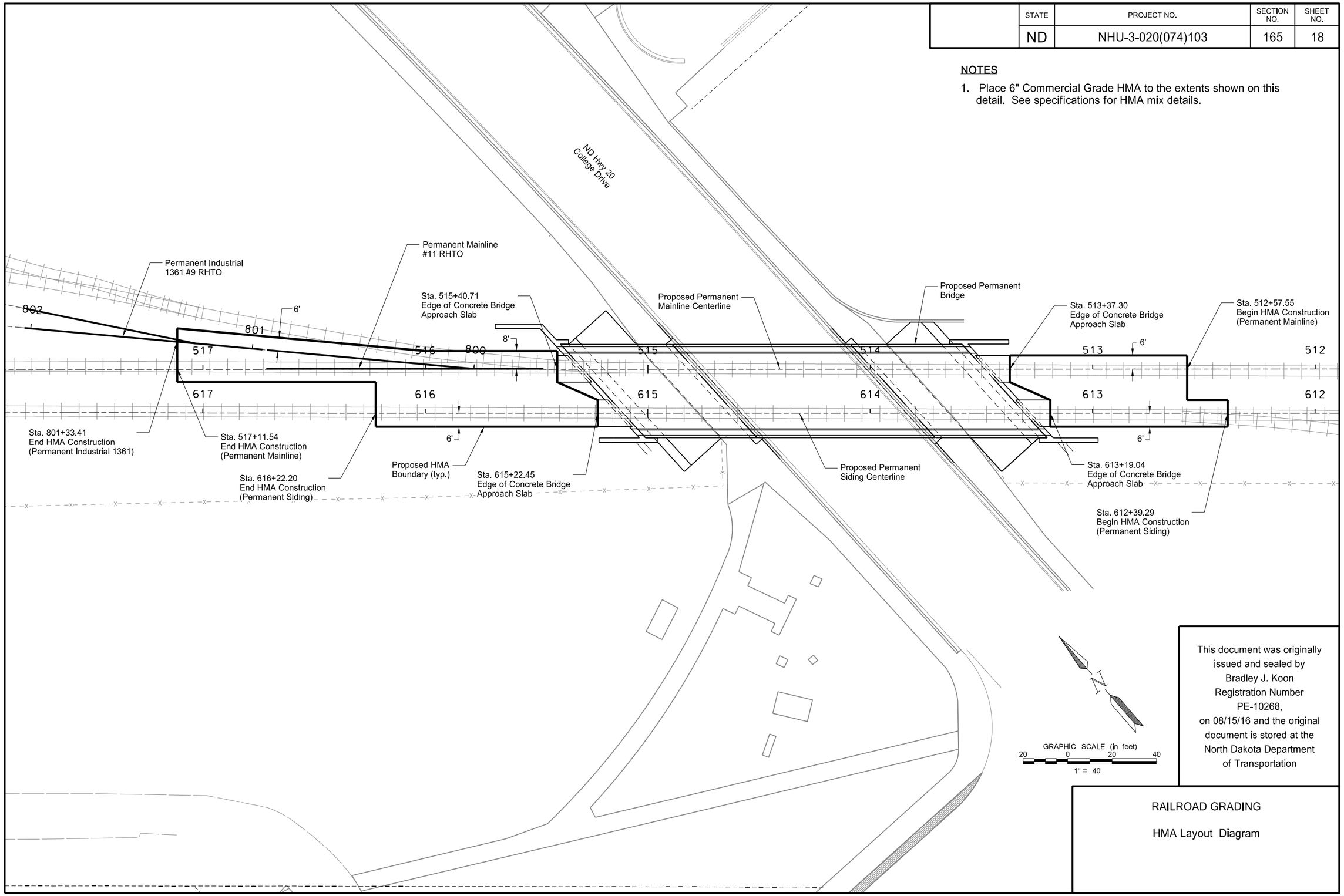

This document was originally issued and sealed by Bradley J. Koon Registration Number PE-10268, on 08/15/16 and the original document is stored at the North Dakota Department of Transportation

RAILROAD GRADING

HMA Layout Diagram

STATE	PROJECT NO.	SECTION NO.	SHEET NO.
ND	NHU-3-020(074)103	165	19

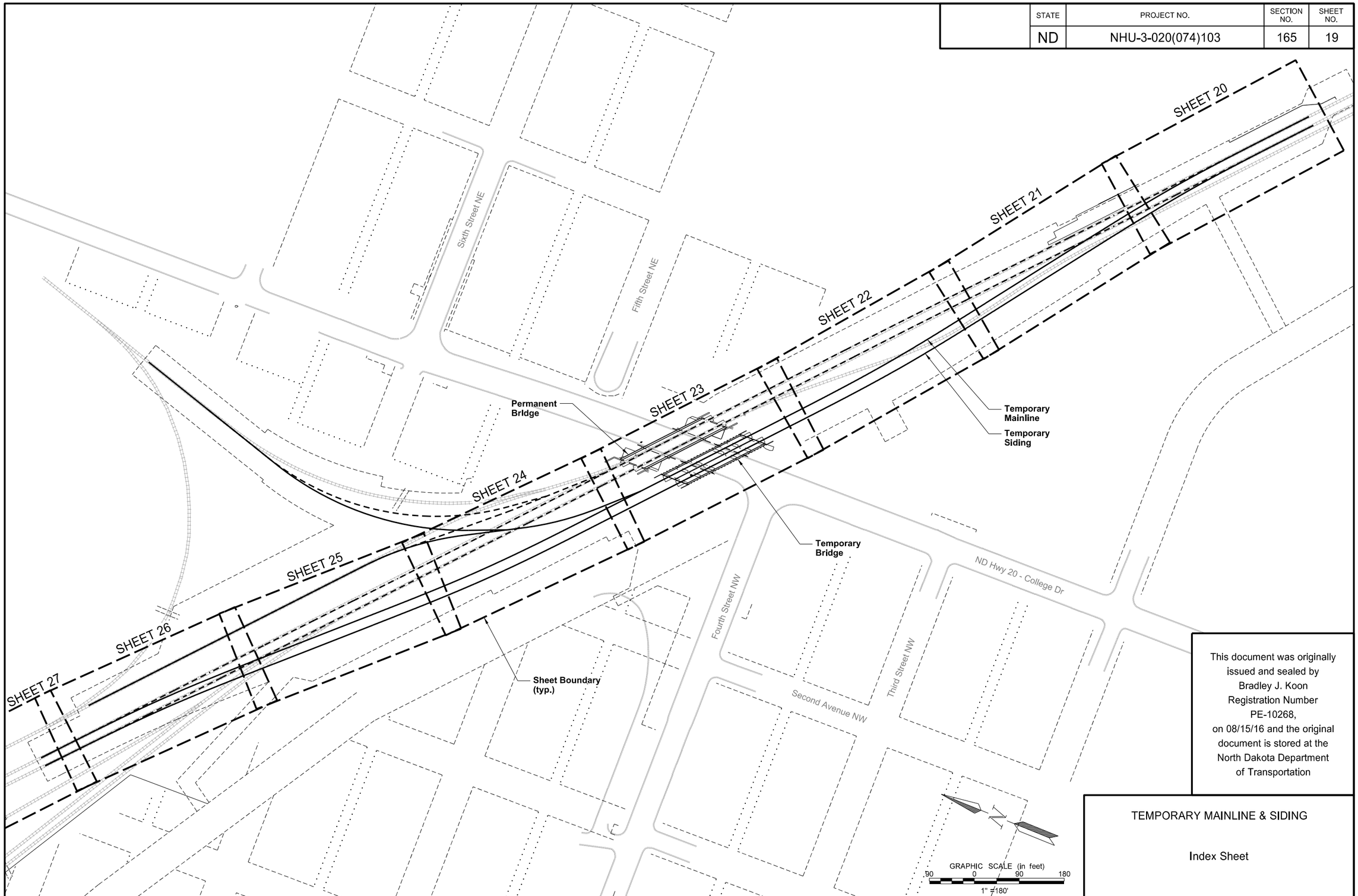

This document was originally issued and sealed by Bradley J. Koon Registration Number PE-10268, on 08/15/16 and the original document is stored at the North Dakota Department of Transportation

TEMPORARY MAINLINE & SIDING

Index Sheet

8/12/2016 1:35:01 PM scottpfahler J:\trans\5211102\CADD\30020103.074\Design\Plans\165\165_TEMP_MLsiding_INDEX.dgn

STATE	PROJECT NO.	SECTION NO.	SHEET NO.
ND	NHU-3-020(074)103	165	20

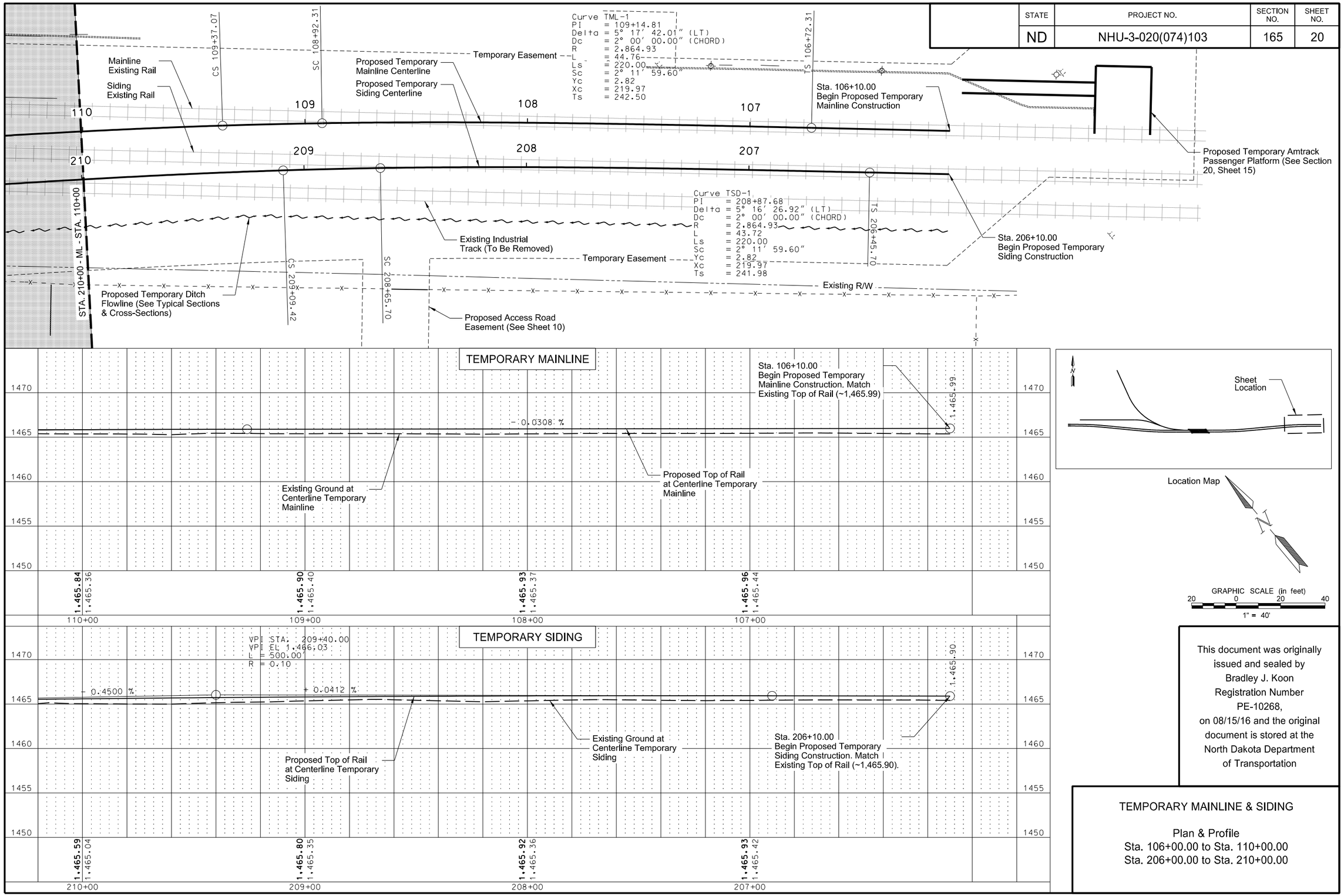

This document was originally issued and sealed by Bradley J. Koon Registration Number PE-10268, on 08/15/16 and the original document is stored at the North Dakota Department of Transportation

TEMPORARY MAINLINE & SIDING

Plan & Profile
Sta. 106+00.00 to Sta. 110+00.00
Sta. 206+00.00 to Sta. 210+00.00

STATE	PROJECT NO.	SECTION NO.	SHEET NO.
ND	NHU-3-020(074)103	165	21

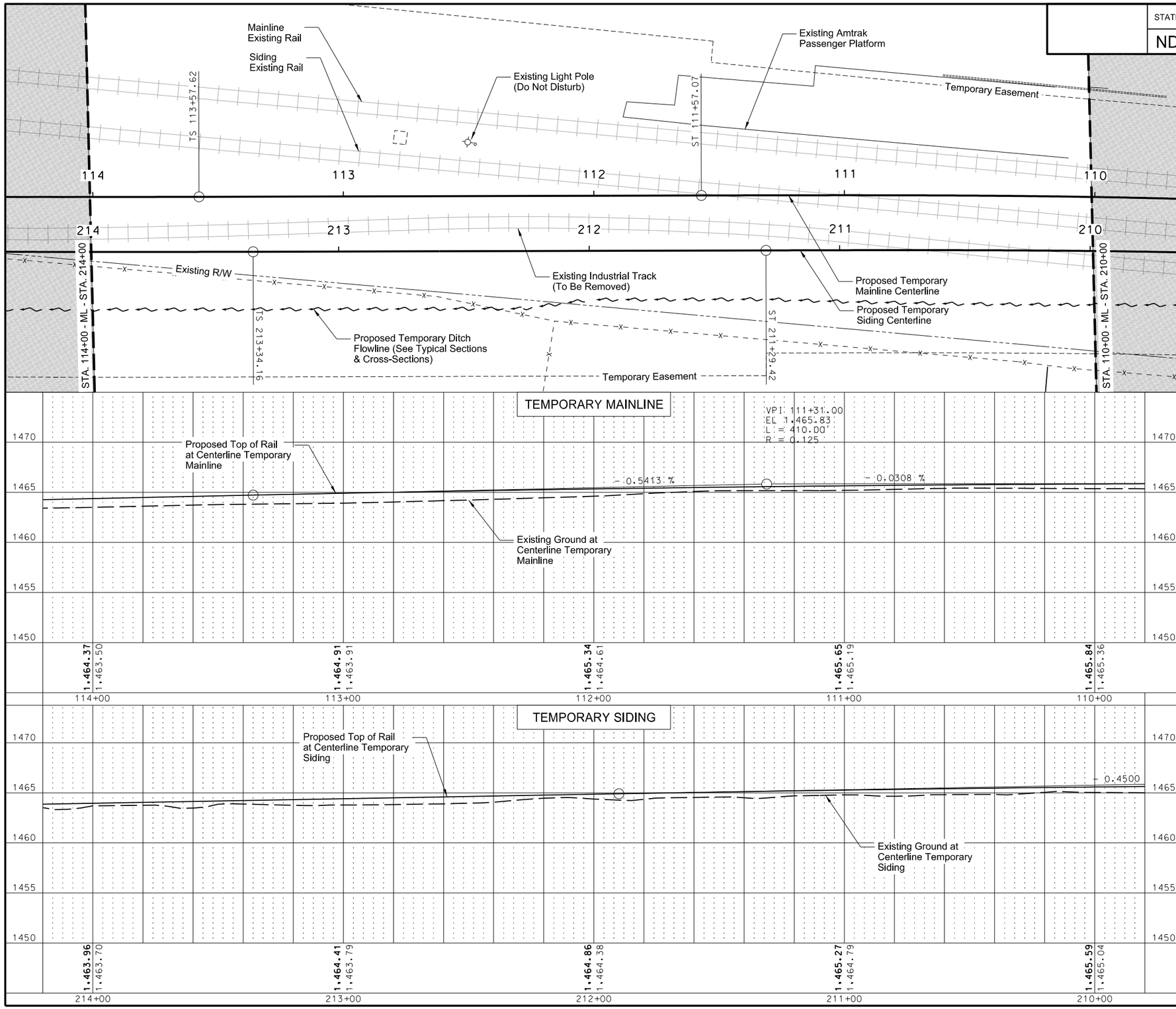

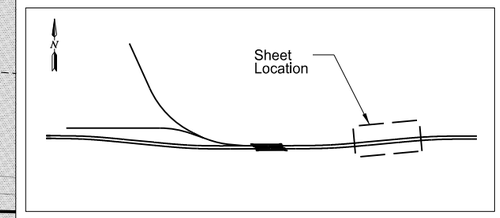

Location Map

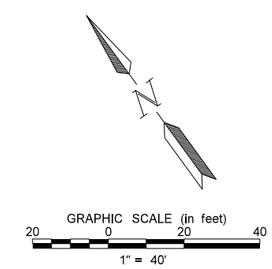

This document was originally issued and sealed by Bradley J. Koon Registration Number PE-10268, on 08/15/16 and the original document is stored at the North Dakota Department of Transportation

TEMPORARY MAINLINE & SIDING

Plan & Profile
Sta. 110+00.00 to Sta. 114+00.00
Sta. 210+00.00 to Sta. 214+00.00

STATE	PROJECT NO.	SECTION NO.	SHEET NO.
ND	NHU-3-020(074)103	165	22

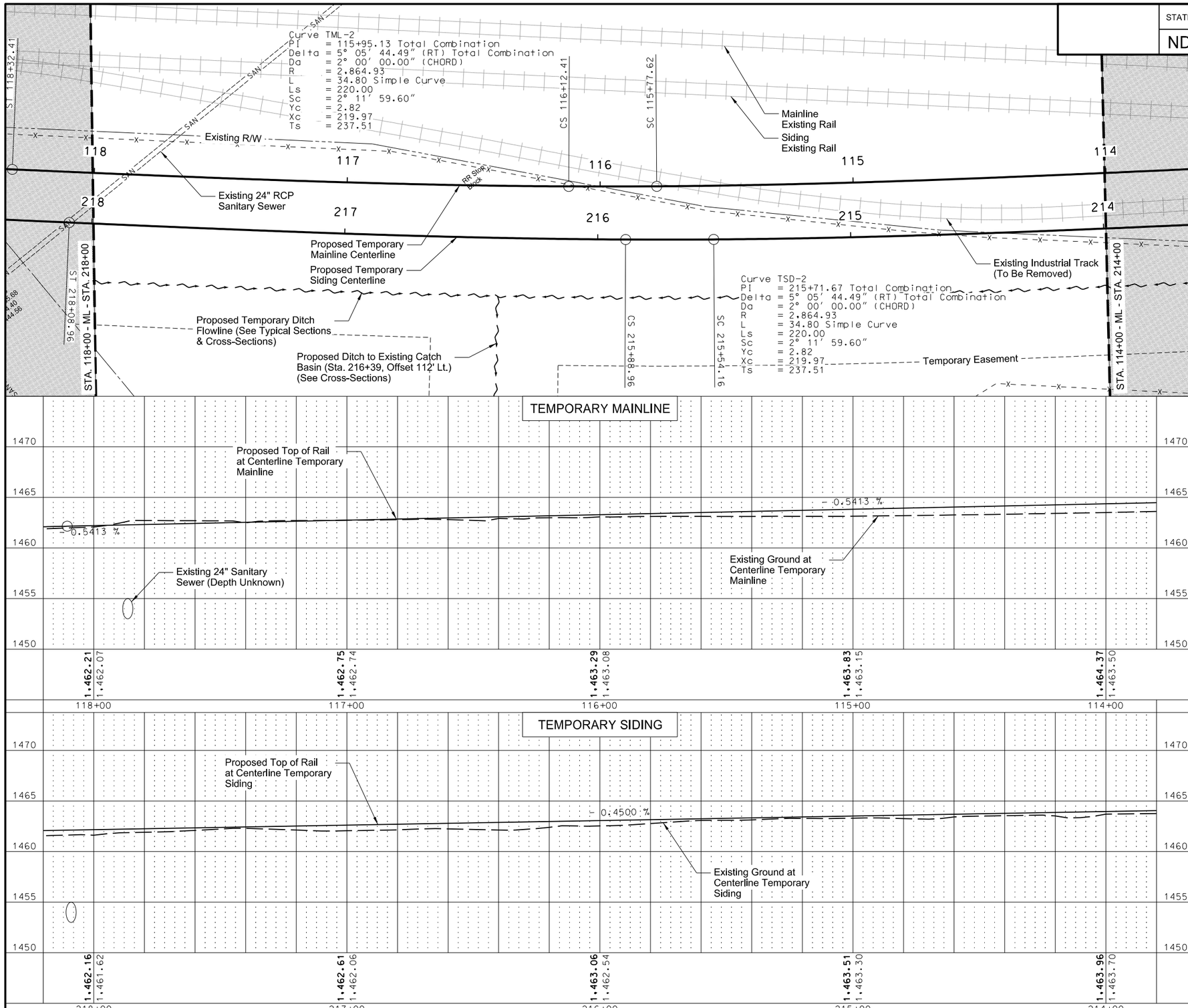

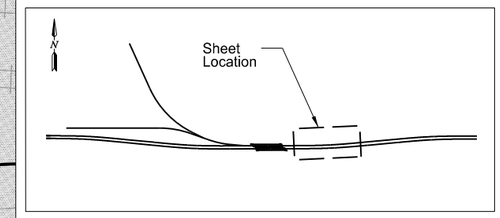

Location Map

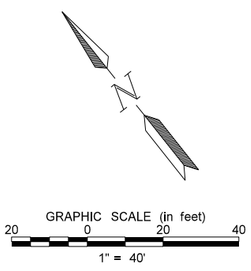

This document was originally issued and sealed by Bradley J. Koon Registration Number PE-10268, on 08/15/16 and the original document is stored at the North Dakota Department of Transportation

TEMPORARY MAINLINE & SIDING

Plan & Profile
Sta. 114+00.00 to Sta. 118+00.00
Sta. 214+00.00 to Sta. 218+00.00

STATE	PROJECT NO.	SECTION NO.	SHEET NO.
ND	NHU-3-020(074)103	165	23

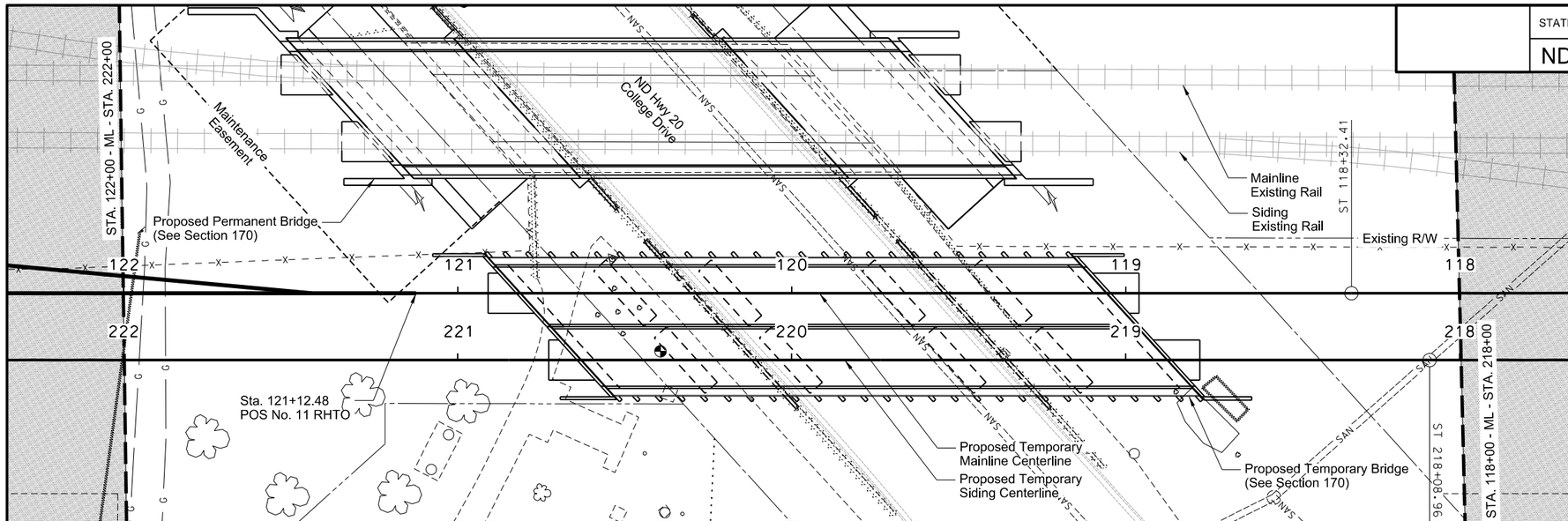

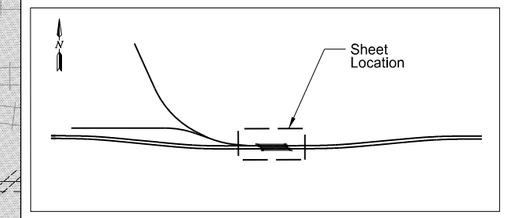

Location Map

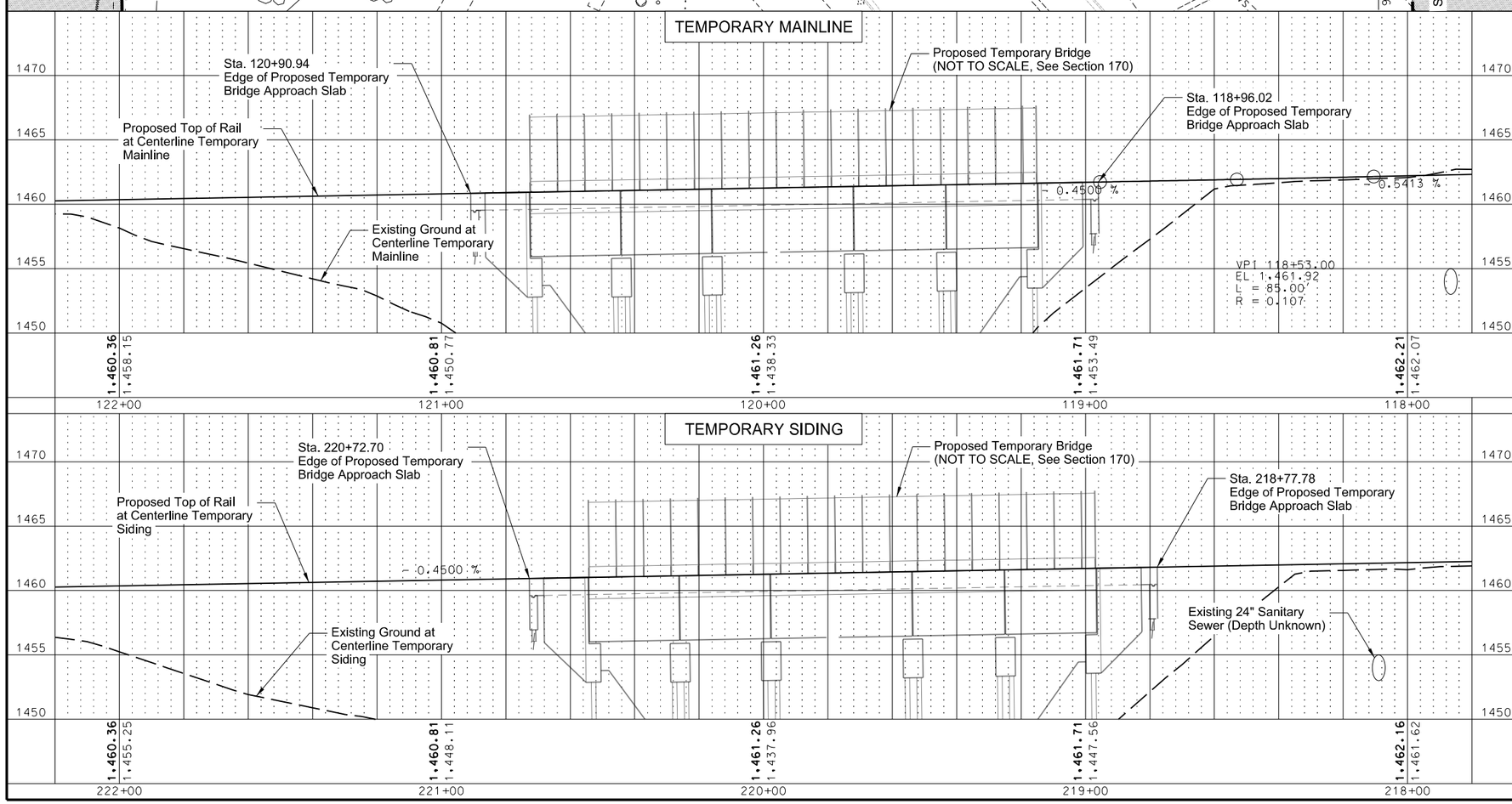

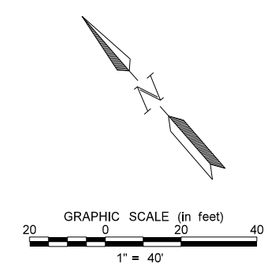

This document was originally issued and sealed by Bradley J. Koon Registration Number PE-10268, on 08/15/16 and the original document is stored at the North Dakota Department of Transportation

TEMPORARY MAINLINE & SIDING

Plan & Profile
Sta. 118+00.00 to Sta. 122+00.00
Sta. 218+00.00 to Sta. 222+00.00

STATE	PROJECT NO.	SECTION NO.	SHEET NO.
ND	NHU-3-020(074)103	165	24

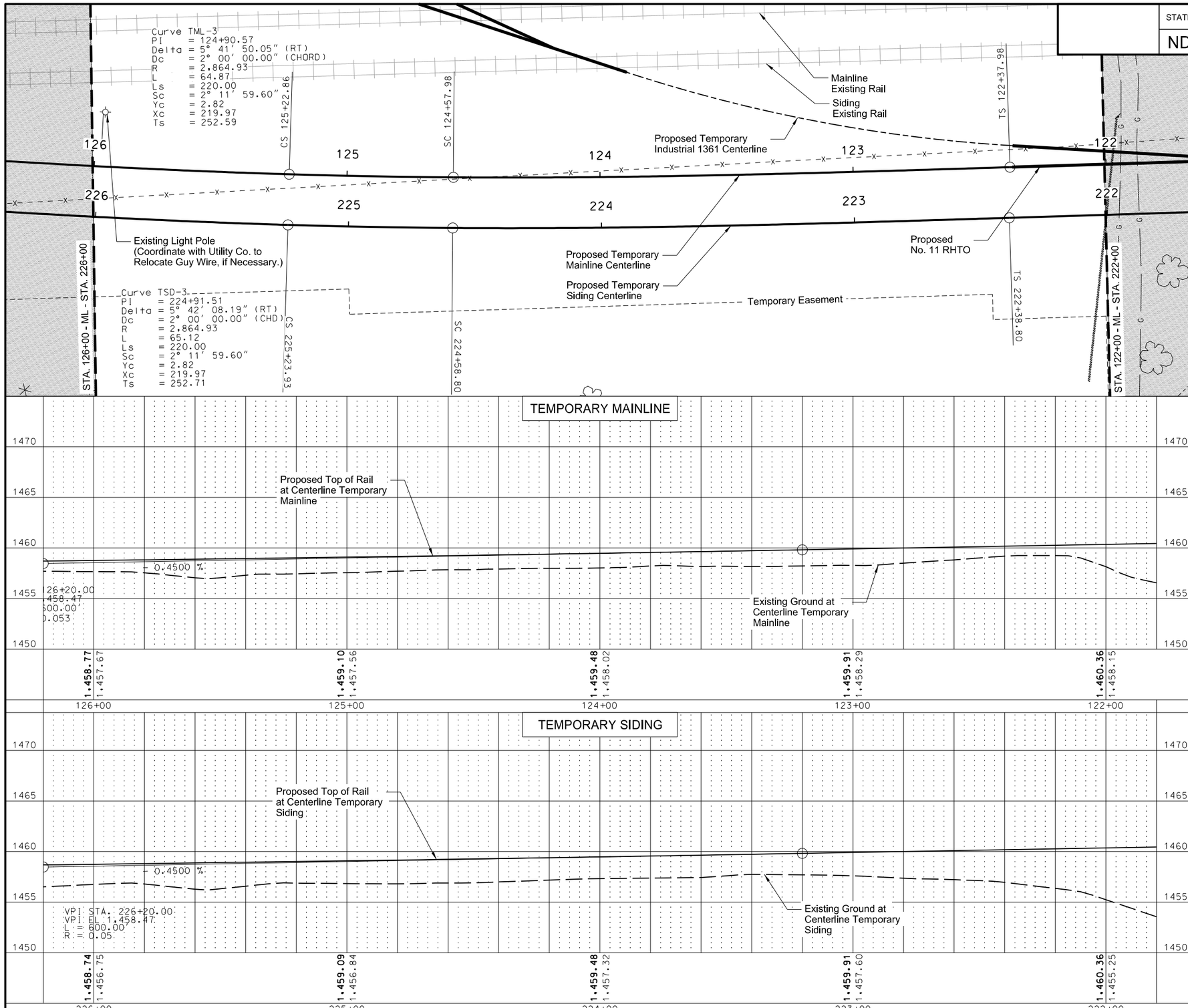

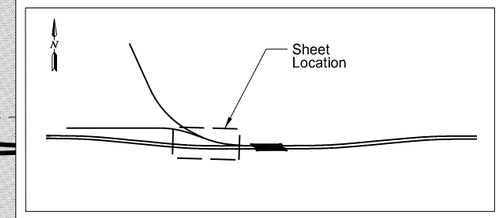

Location Map

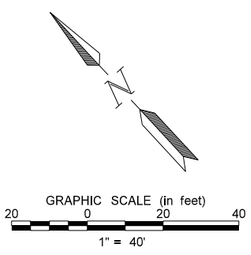

This document was originally issued and sealed by Bradley J. Koon Registration Number PE-10268, on 08/15/16 and the original document is stored at the North Dakota Department of Transportation

TEMPORARY MAINLINE & SIDING

Plan & Profile
Sta. 122+00.00 to Sta. 126+00.00
Sta. 222+00.00 to Sta. 226+00.00

STATE	PROJECT NO.	SECTION NO.	SHEET NO.
ND	NHU-3-020(074)103	165	25

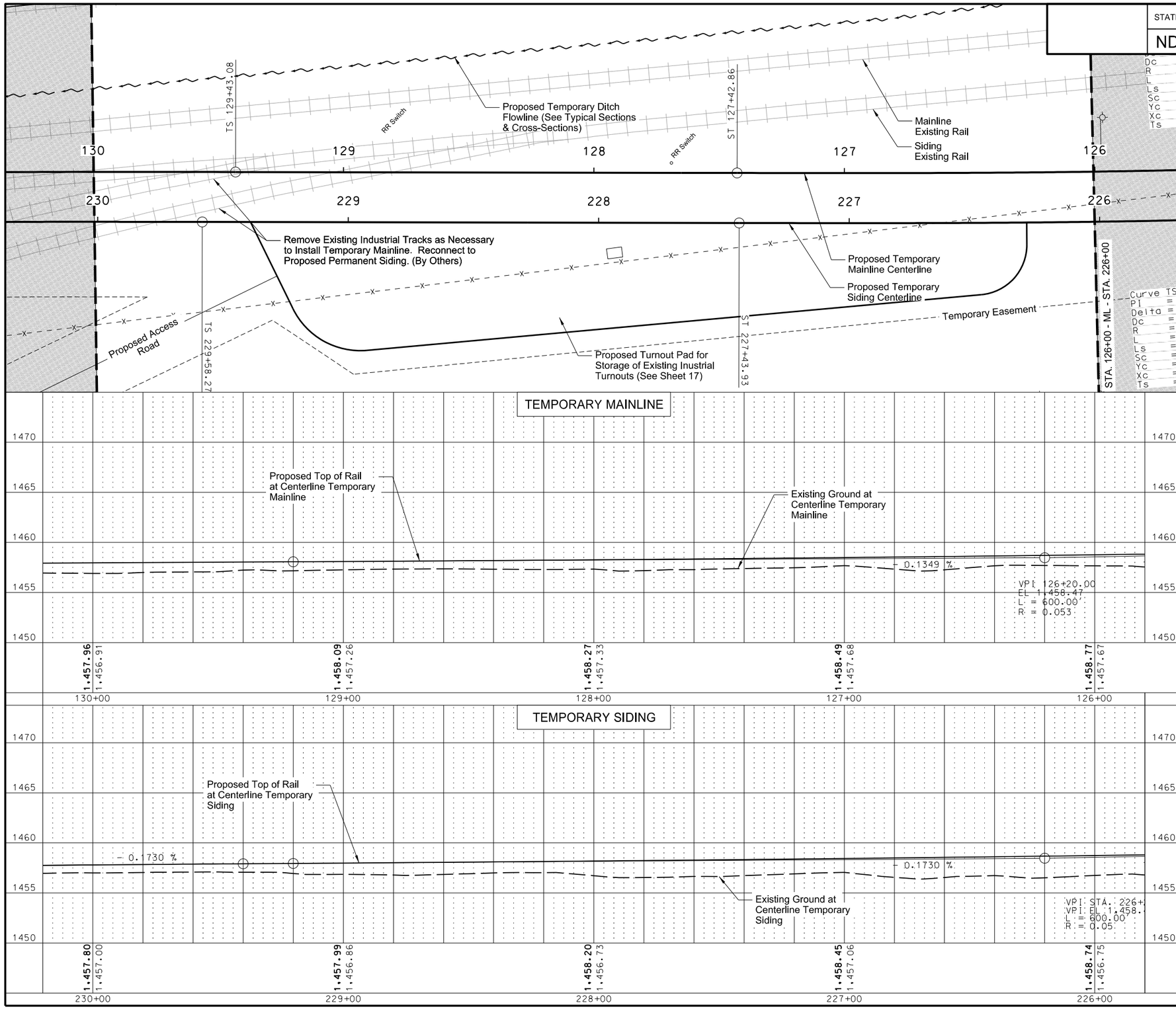

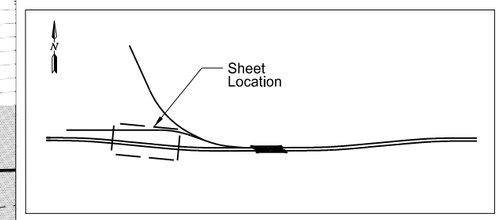

Location Map

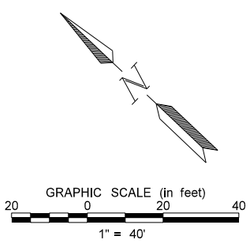

This document was originally issued and sealed by Bradley J. Koon Registration Number PE-10268, on 08/15/16 and the original document is stored at the North Dakota Department of Transportation

TEMPORARY MAINLINE & SIDING

Plan & Profile
Sta. 126+00.00 to Sta. 130+00.00
Sta. 226+00.00 to Sta. 230+00.00

STATE	PROJECT NO.	SECTION NO.	SHEET NO.
ND	NHU-3-020(074)103	165	26

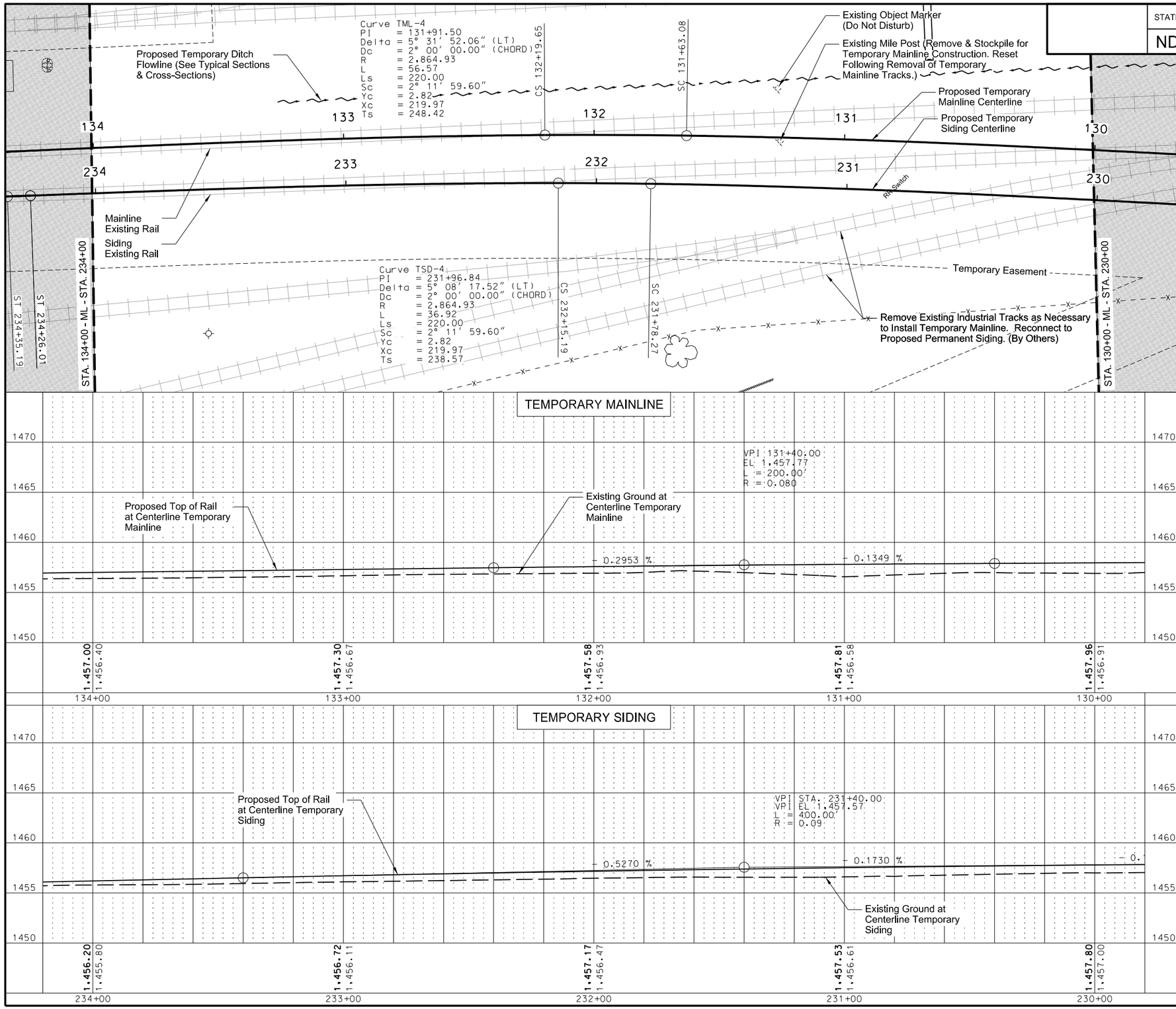

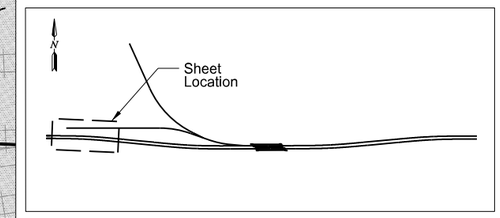

Location Map

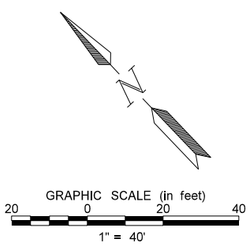

This document was originally issued and sealed by Bradley J. Koon Registration Number PE-10268, on 08/15/16 and the original document is stored at the North Dakota Department of Transportation

TEMPORARY MAINLINE & SIDING

Plan & Profile
Sta. 130+00.00 to Sta. 134+00.00
Sta. 230+00.00 to Sta. 234+00.00

STATE	PROJECT NO.	SECTION NO.	SHEET NO.
ND	NHU-3-020(074)103	165	27

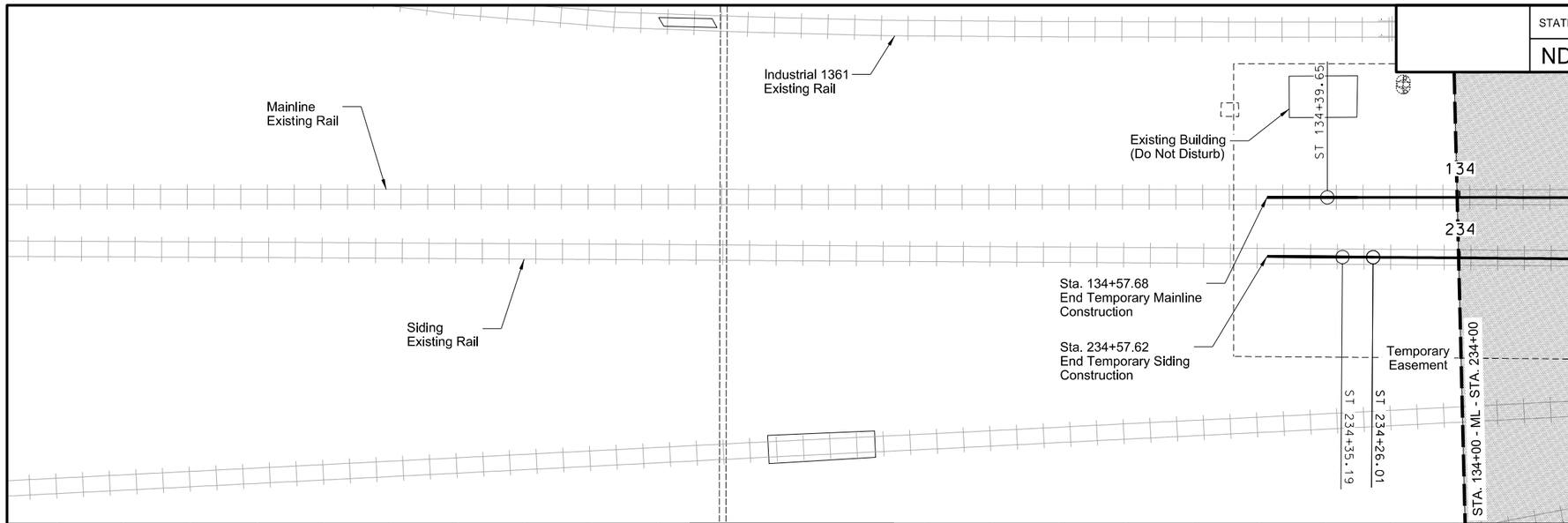

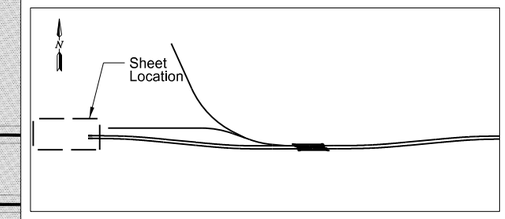

Location Map

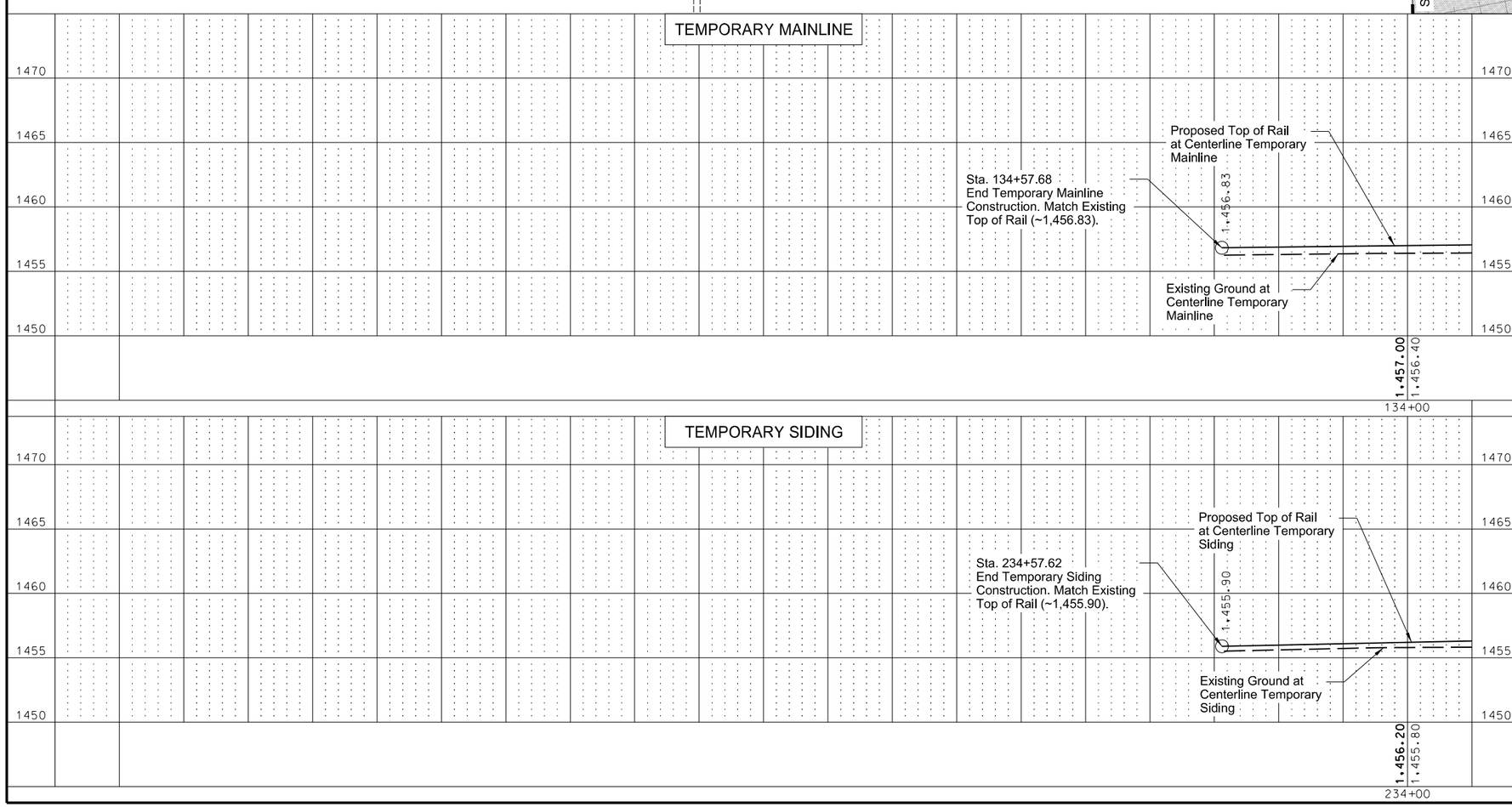

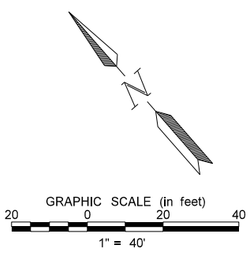

This document was originally issued and sealed by Bradley J. Koon Registration Number PE-10268, on 08/15/16 and the original document is stored at the North Dakota Department of Transportation

TEMPORARY MAINLINE & SIDING

Plan & Profile
Sta. 134+00.00 to End
Sta. 234+00.00 to End

STATE	PROJECT NO.	SECTION NO.	SHEET NO.
ND	NHU-3-020(074)103	165	28

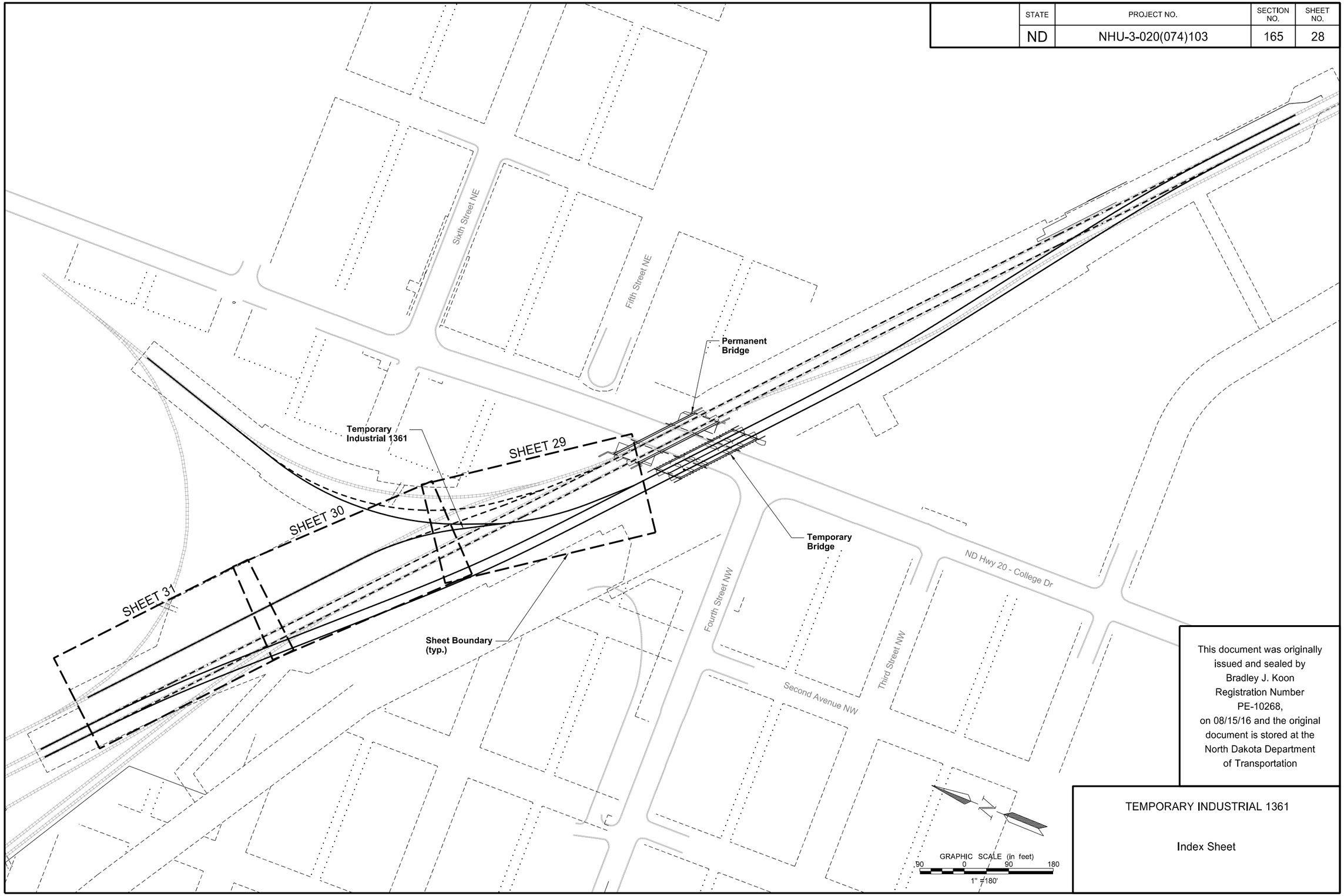

This document was originally issued and sealed by Bradley J. Koon Registration Number PE-10268, on 08/15/16 and the original document is stored at the North Dakota Department of Transportation

TEMPORARY INDUSTRIAL 1361

Index Sheet

STATE	PROJECT NO.	SECTION NO.	SHEET NO.
ND	NHU-3-020(074)103	165	29

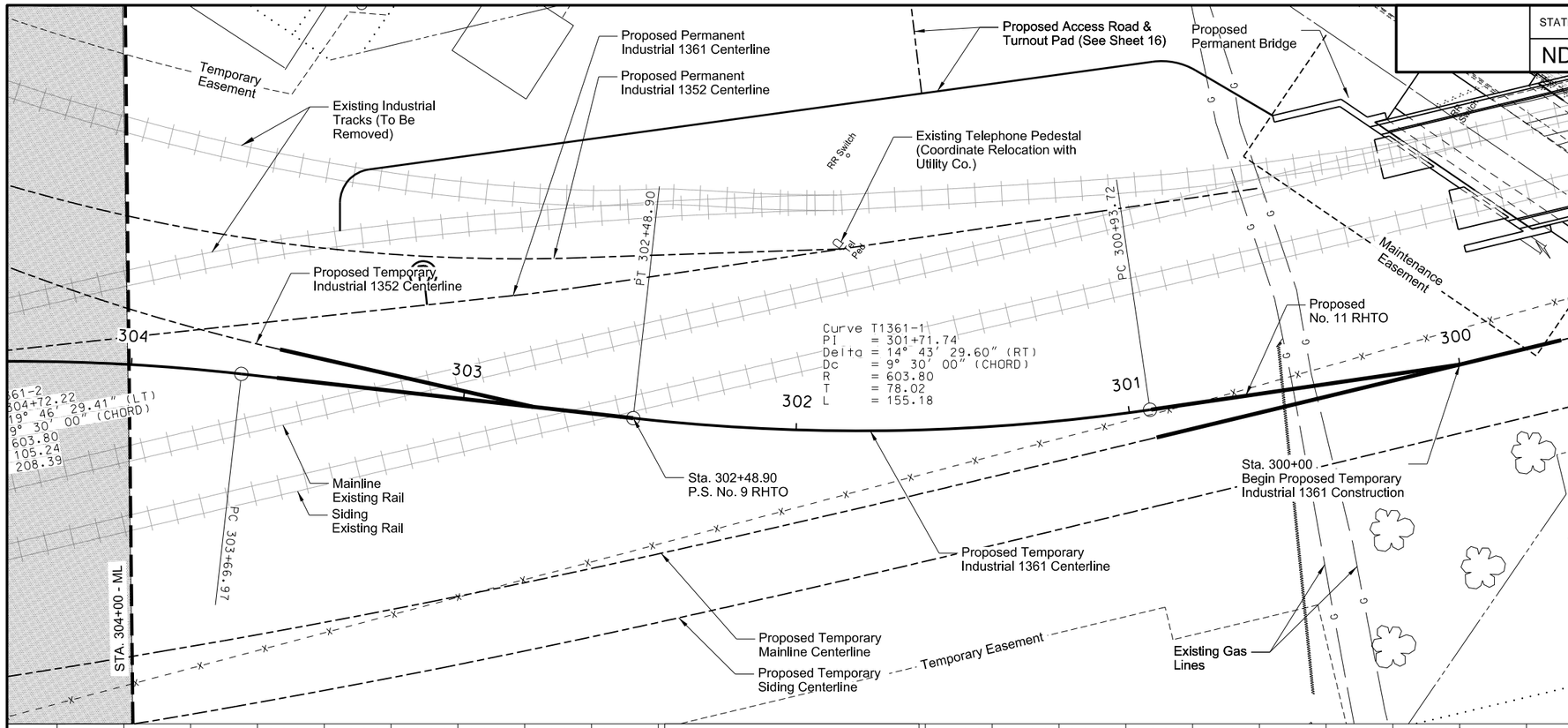

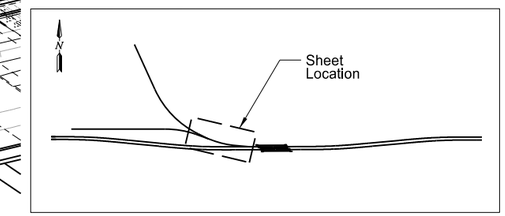

Location Map

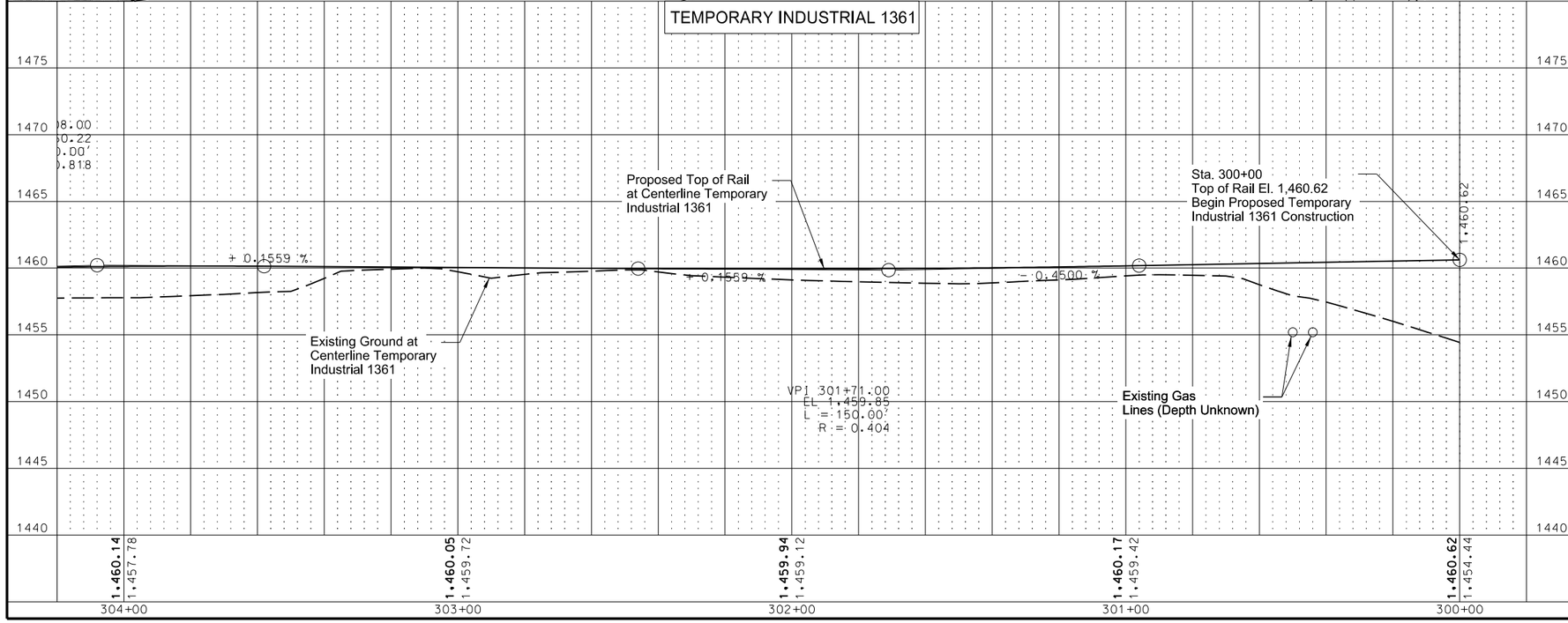

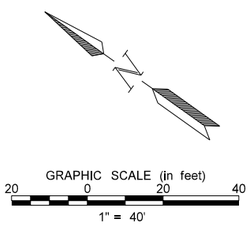

This document was originally issued and sealed by Bradley J. Koon Registration Number PE-10268, on 08/15/16 and the original document is stored at the North Dakota Department of Transportation

TEMPORARY INDUSTRIAL 1361

Plan & Profile
Sta. 300+00.00 to Sta. 304+00.00

STATE	PROJECT NO.	SECTION NO.	SHEET NO.
ND	NHU-3-020(074)103	165	30

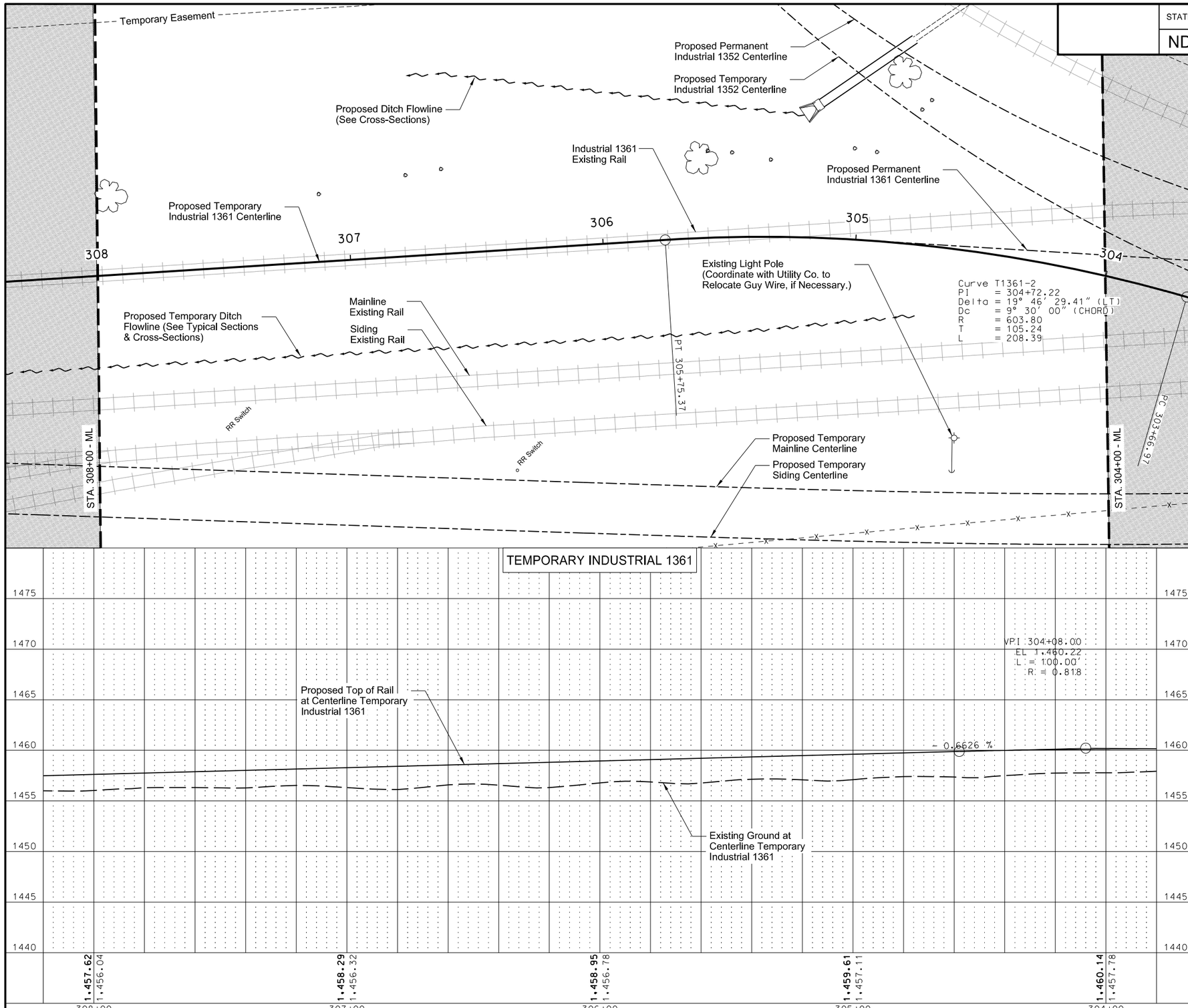

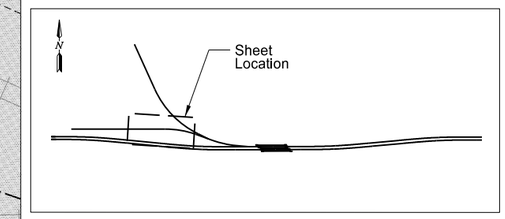

Location Map

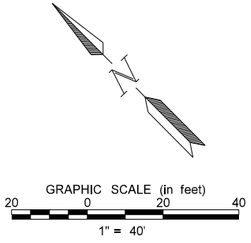

This document was originally issued and sealed by Bradley J. Koon Registration Number PE-10268, on 08/15/16 and the original document is stored at the North Dakota Department of Transportation

TEMPORARY INDUSTRIAL 1361

Plan & Profile
Sta. 304+00.00 to Sta. 308+00.00

STATE	PROJECT NO.	SECTION NO.	SHEET NO.
ND	NHU-3-020(074)103	165	31

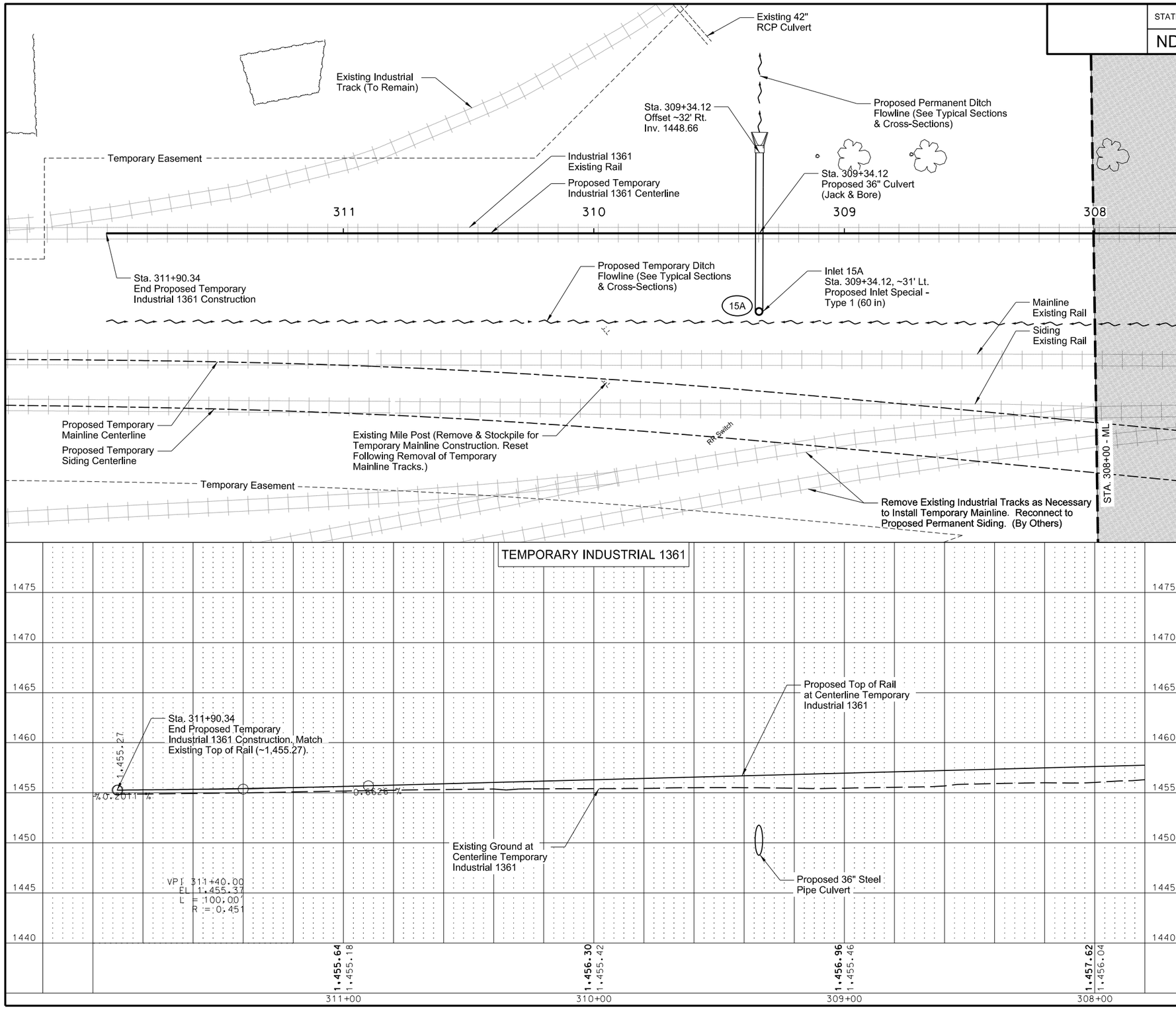

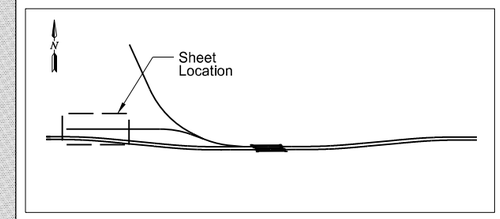

Location Map

Spec	Item Description	Qty	Unit
714-4124	PIPE CONDUIT 36IN 15A to Sta. 309+34.12 ~32' Rt.	64	LF
722-3760	INLET SPECIAL - TYPE 1 - 60IN Sta. 309+34.12 ~31' Lt.	1	EA

NOTES

1. Jack and bore the 36" culvert at Sta. 309+34.12 to minimize disturbance to the existing railroad embankment. See notes on sheets 2 and 3.

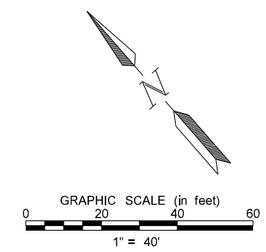

This document was originally issued and sealed by Bradley J. Koon Registration Number PE-10268, on 08/17/16 and the original document is stored at the North Dakota Department of Transportation

TEMPORARY INDUSTRIAL 1361

Plan & Profile
Sta. 308+00.00 to End

STATE	PROJECT NO.	SECTION NO.	SHEET NO.
ND	NHU-3-020(074)103	165	32

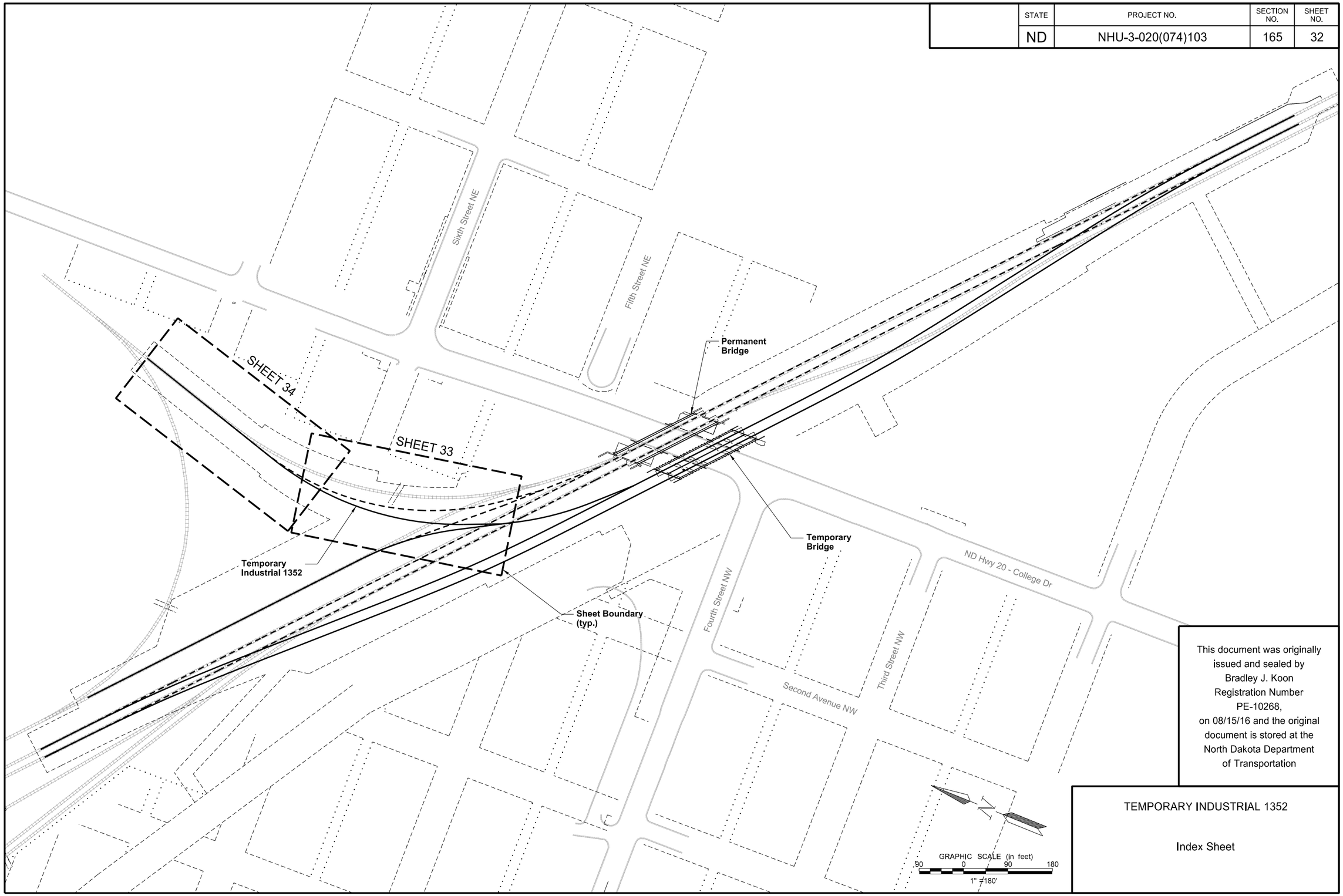

This document was originally issued and sealed by Bradley J. Koon Registration Number PE-10268, on 08/15/16 and the original document is stored at the North Dakota Department of Transportation

TEMPORARY INDUSTRIAL 1352

Index Sheet

STATE	PROJECT NO.	SECTION NO.	SHEET NO.
ND	NHU-3-020(074)103	165	33

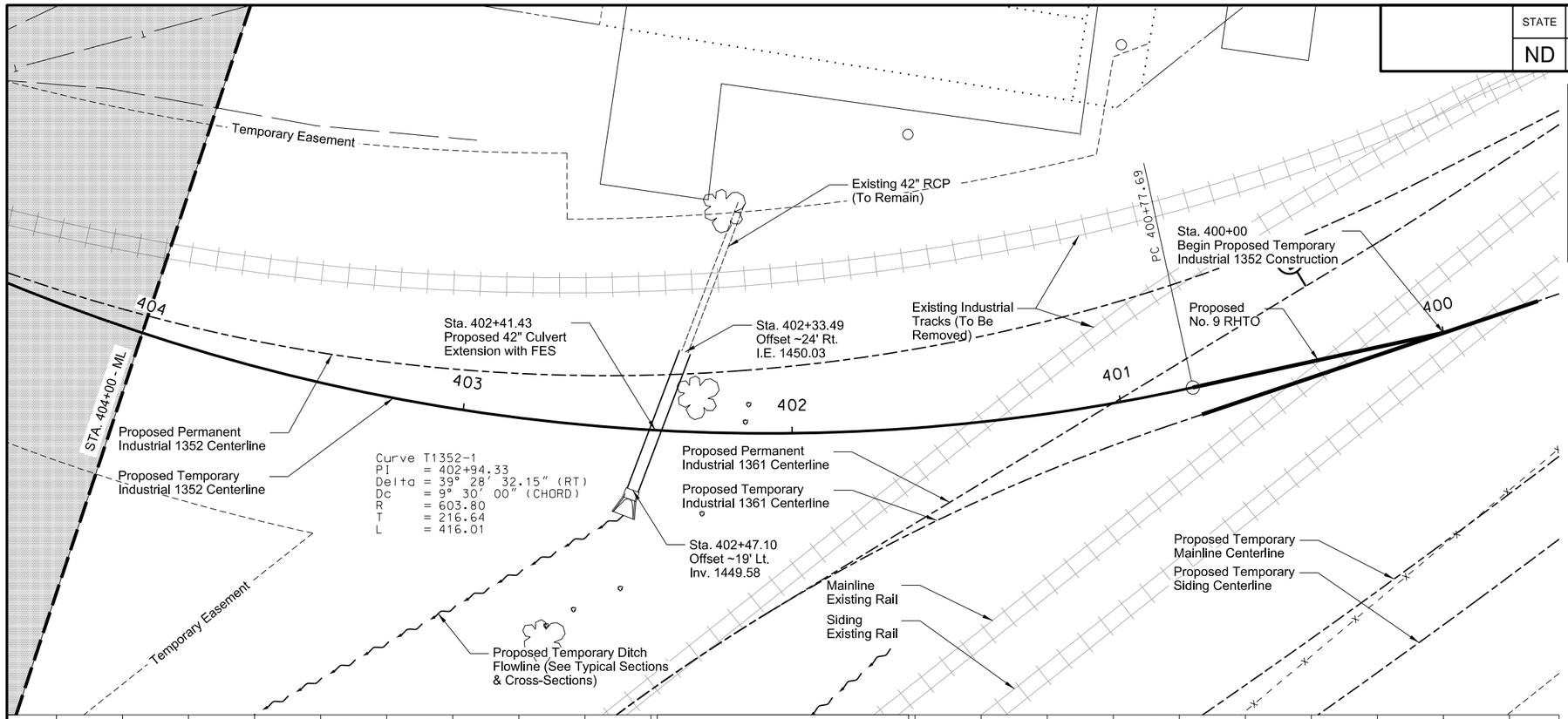

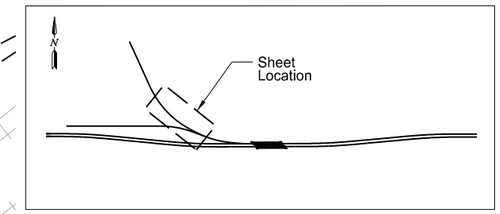

Location Map

Spec	Item Description	Qty	Unit
714-1020	PIPE CONDUIT 42IN Sta. 402+33.49 ~24' Rt. to Sta. 402+47.10 ~19' Lt.	44	LF

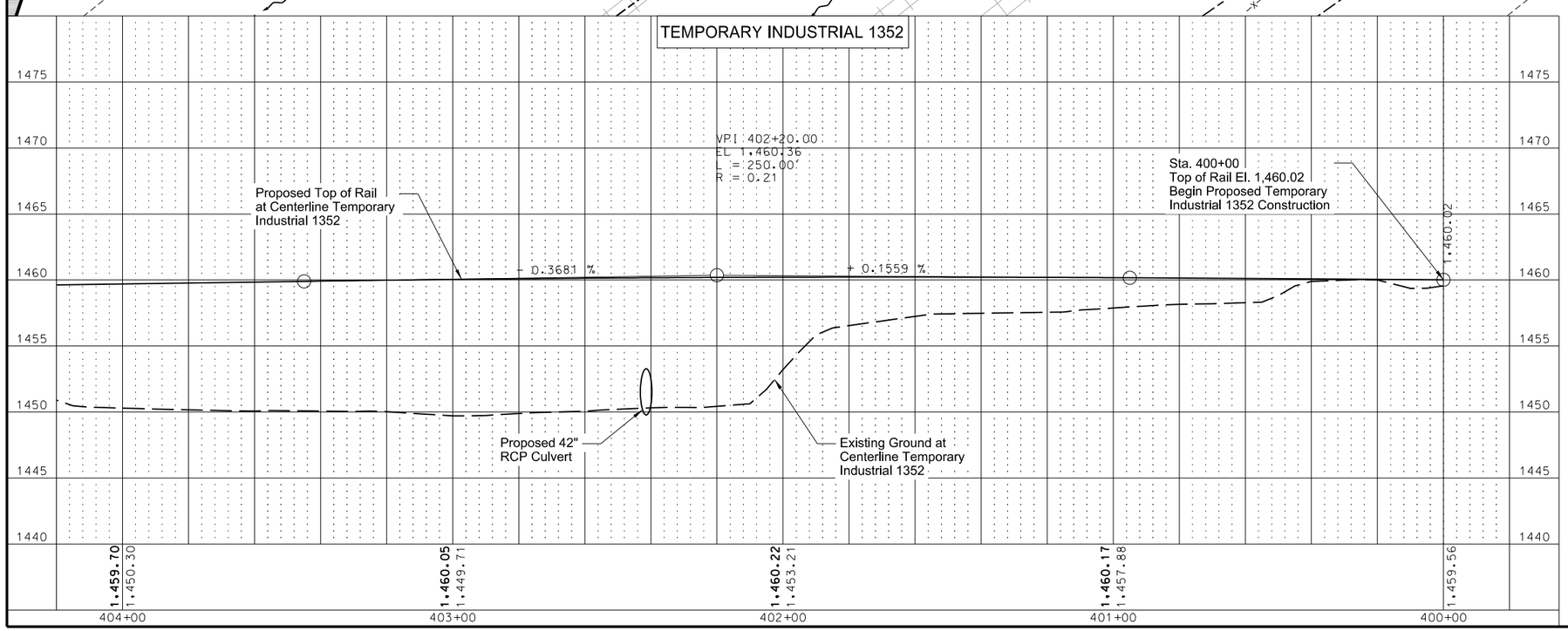

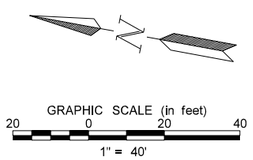

This document was originally issued and sealed by Bradley J. Koon Registration Number PE-10268, on 08/17/16 and the original document is stored at the North Dakota Department of Transportation

TEMPORARY INDUSTRIAL 1352

Plan & Profile
Sta. 400+00.00 to Sta. 404+00.00

STATE	PROJECT NO.	SECTION NO.	SHEET NO.
ND	NHU-3-020(074)103	165	34

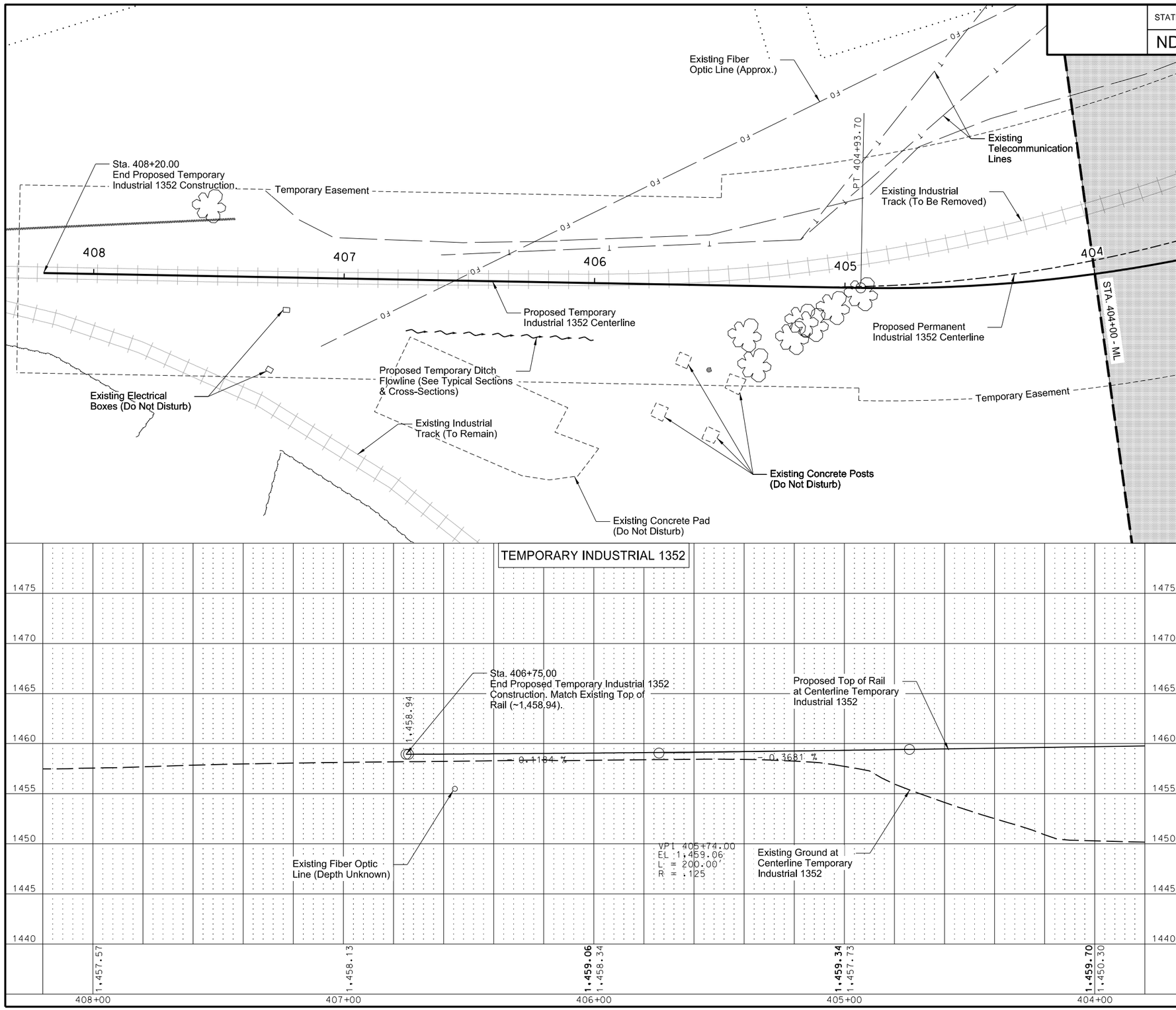

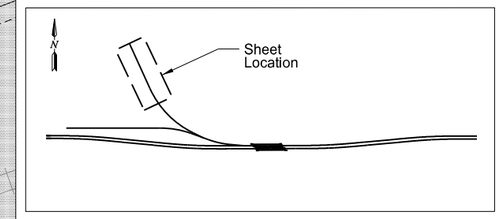

Location Map

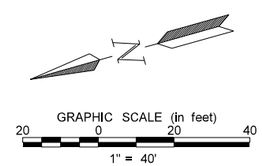

This document was originally issued and sealed by Bradley J. Koon Registration Number PE-10268, on 08/15/16 and the original document is stored at the North Dakota Department of Transportation

TEMPORARY INDUSTRIAL 1352

Plan & Profile
Sta. 404+00.00 to End

STATE	PROJECT NO.	SECTION NO.	SHEET NO.
ND	NHU-3-020(074)103	165	35

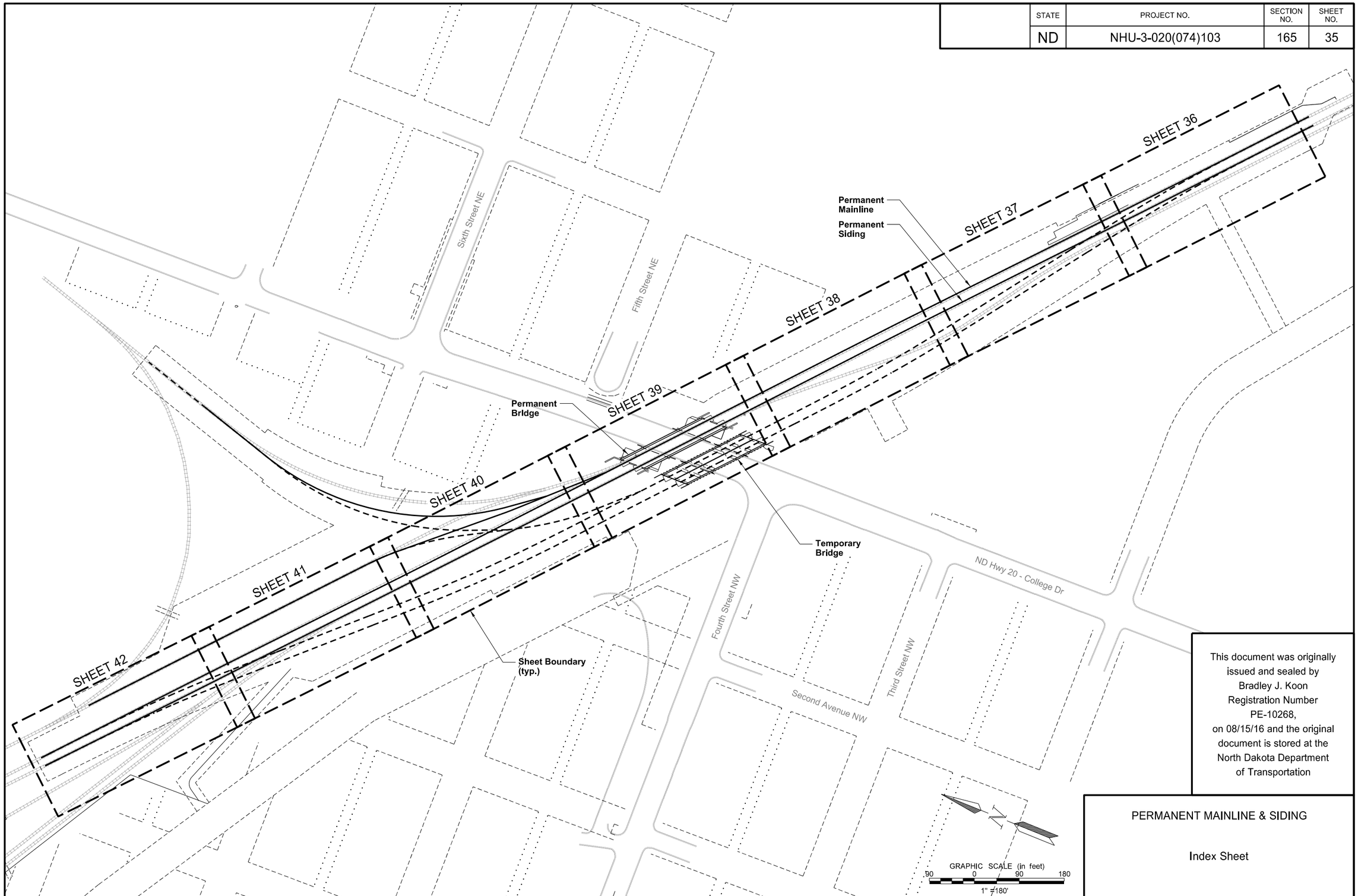

This document was originally issued and sealed by Bradley J. Koon Registration Number PE-10268, on 08/15/16 and the original document is stored at the North Dakota Department of Transportation

PERMANENT MAINLINE & SIDING

Index Sheet

STATE	PROJECT NO.	SECTION NO.	SHEET NO.
ND	NHU-3-020(074)103	165	36

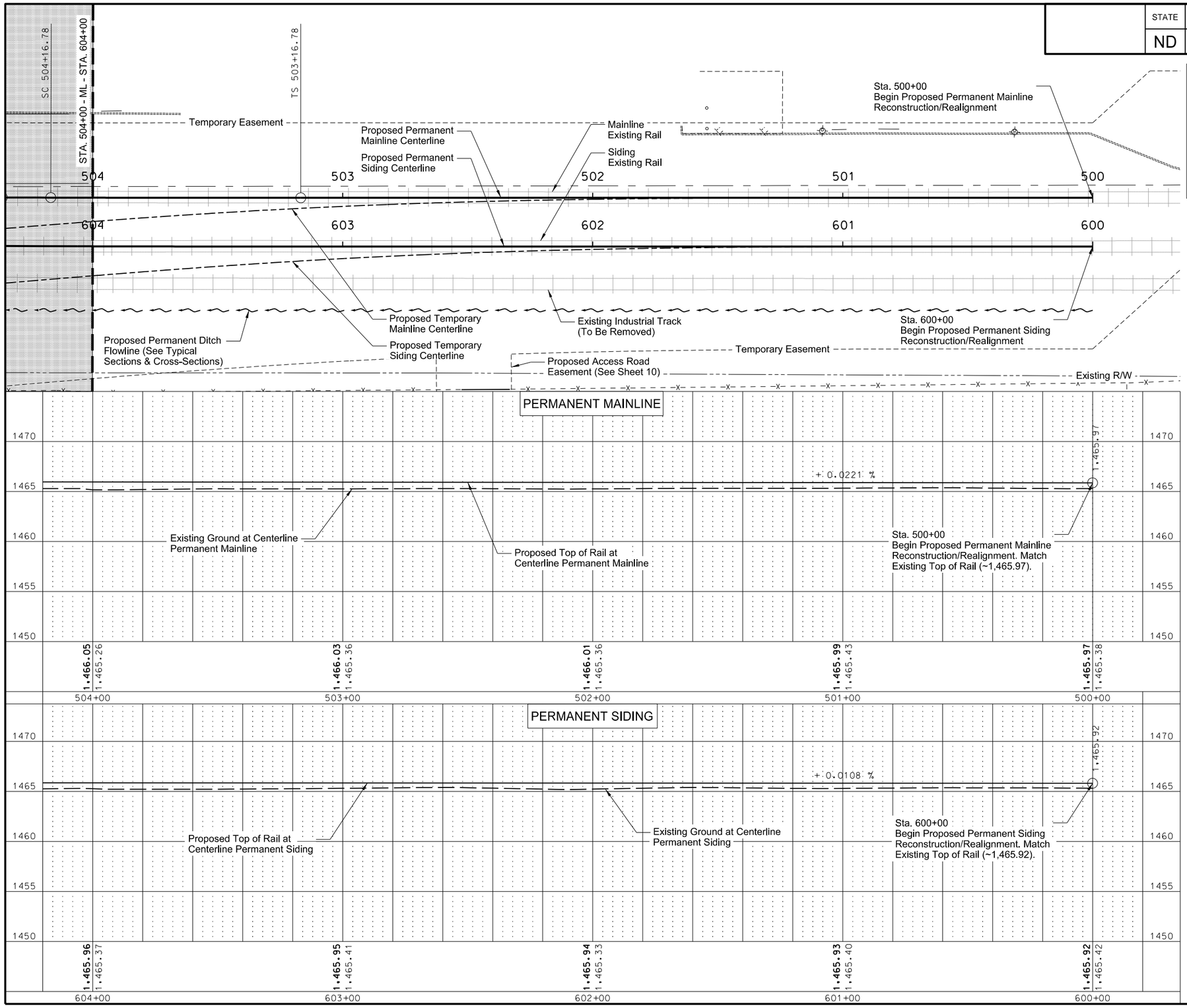

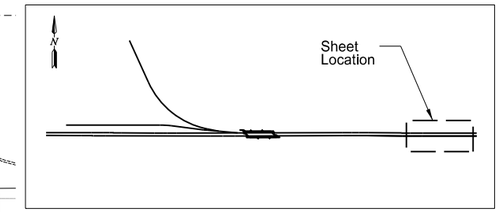

Location Map

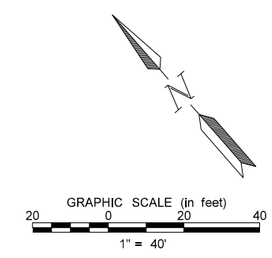

This document was originally issued and sealed by Bradley J. Koon Registration Number PE-10268, on 08/15/16 and the original document is stored at the North Dakota Department of Transportation

PERMANENT MAINLINE & SIDING

Plan & Profile
Sta. 500+00.00 to Sta. 504+00.00
Sta. 600+00.00 to Sta. 604+00.00

STATE	PROJECT NO.	SECTION NO.	SHEET NO.
ND	NHU-3-020(074)103	165	37

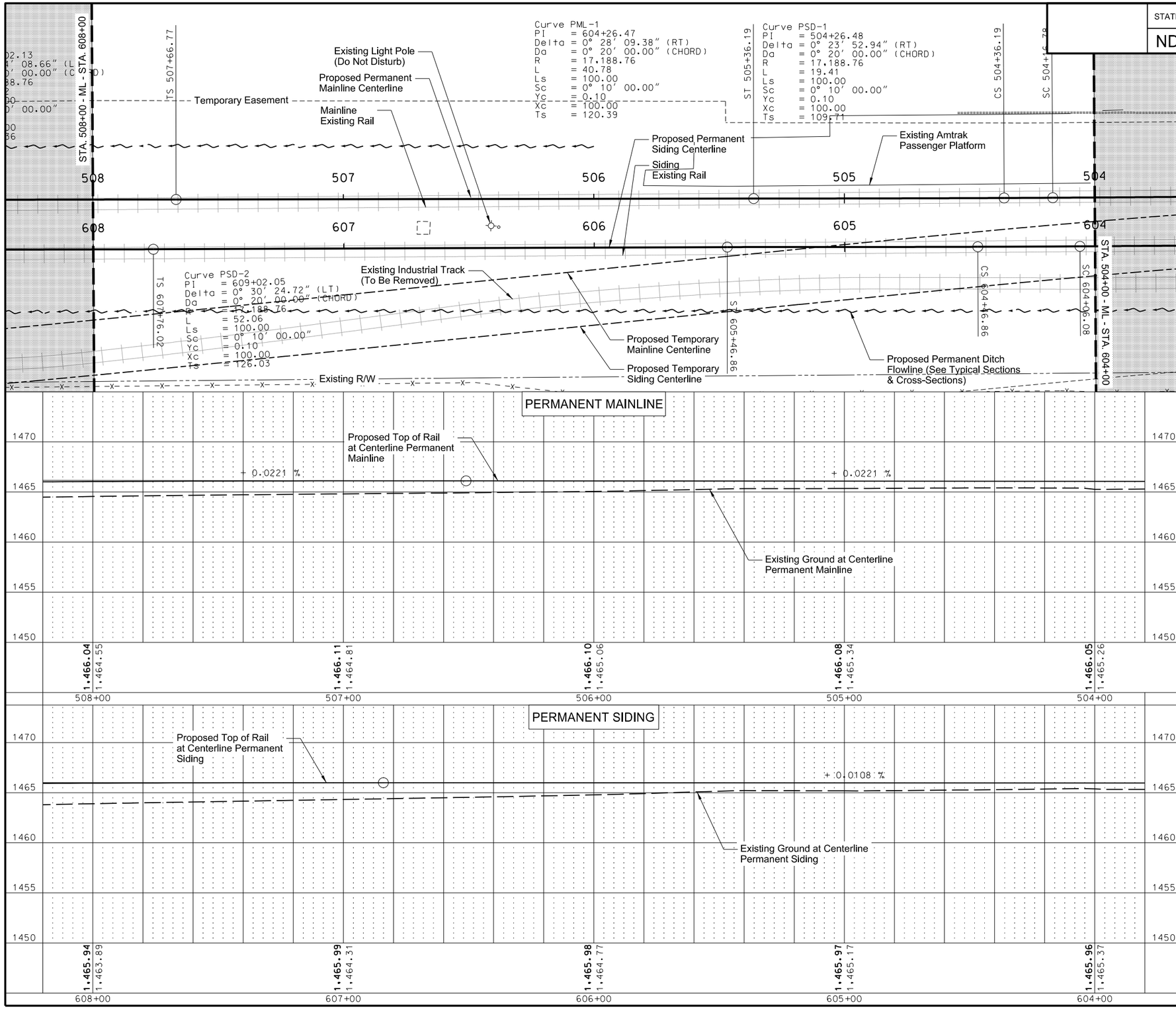

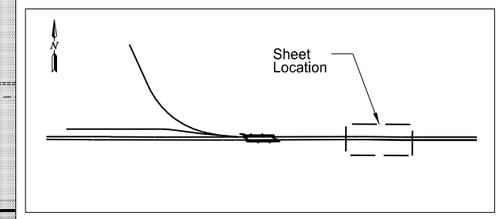

Location Map

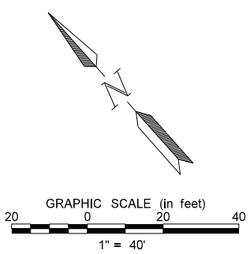

This document was originally issued and sealed by Bradley J. Koon Registration Number PE-10268, on 08/15/16 and the original document is stored at the North Dakota Department of Transportation

PERMANENT MAINLINE & SIDING

Plan & Profile
Sta. 504+00.00 to Sta. 508+00.00
Sta. 604+00.00 to Sta. 608+00.00

STATE	PROJECT NO.	SECTION NO.	SHEET NO.
ND	NHU-3-020(074)103	165	38

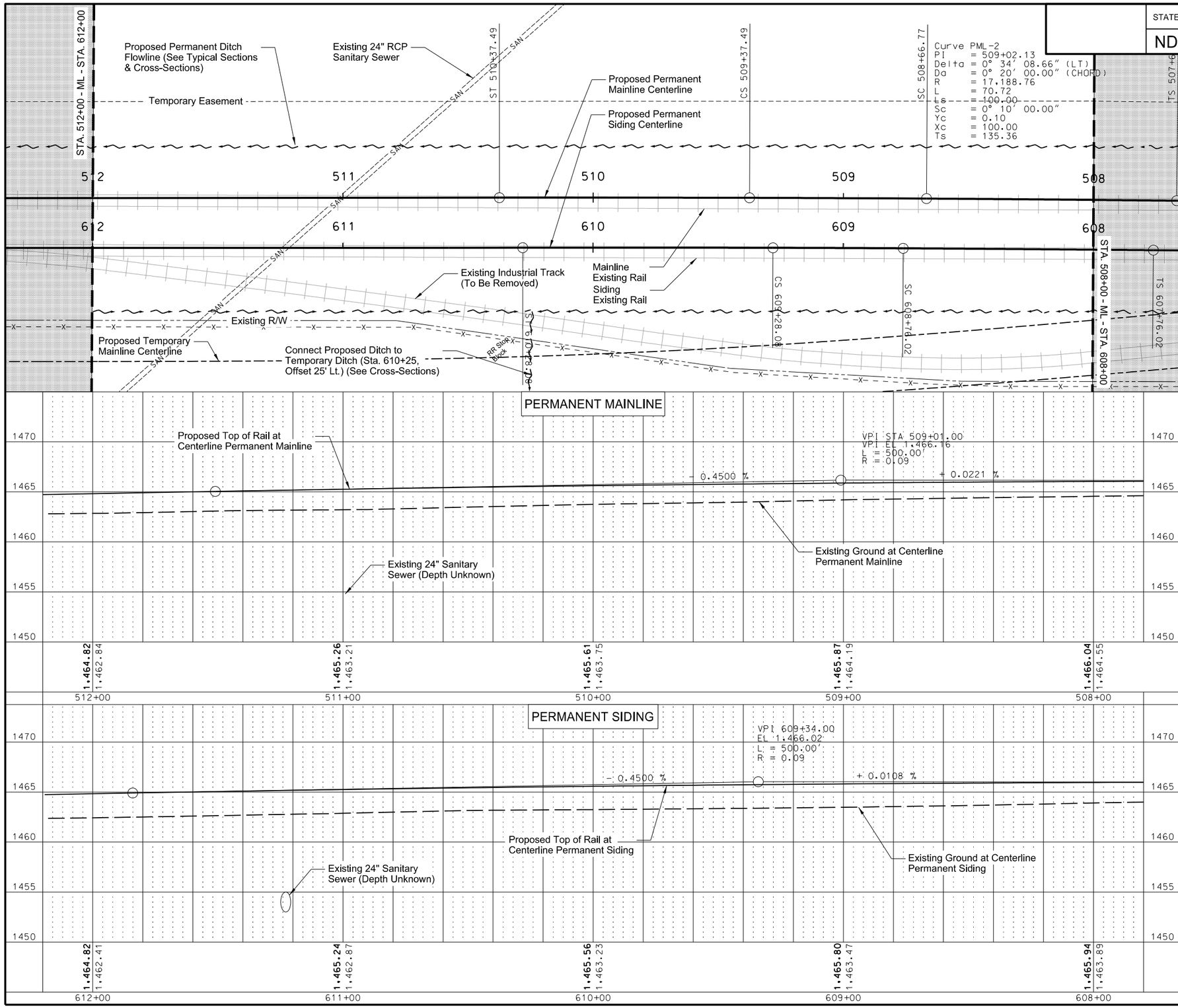

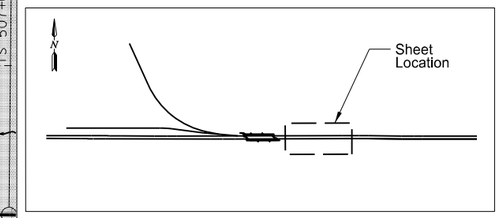

Location Map

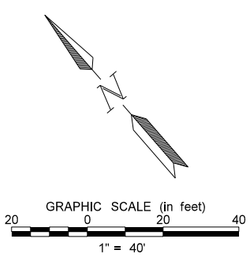

This document was originally issued and sealed by Bradley J. Koon Registration Number PE-10268, on 08/15/16 and the original document is stored at the North Dakota Department of Transportation

PERMANENT MAINLINE & SIDING

Plan & Profile
Sta. 508+00.00 to Sta. 512+00.00
Sta. 608+00.00 to Sta. 612+00.00

STATE	PROJECT NO.	SECTION NO.	SHEET NO.
ND	NHU-3-020(074)103	165	39

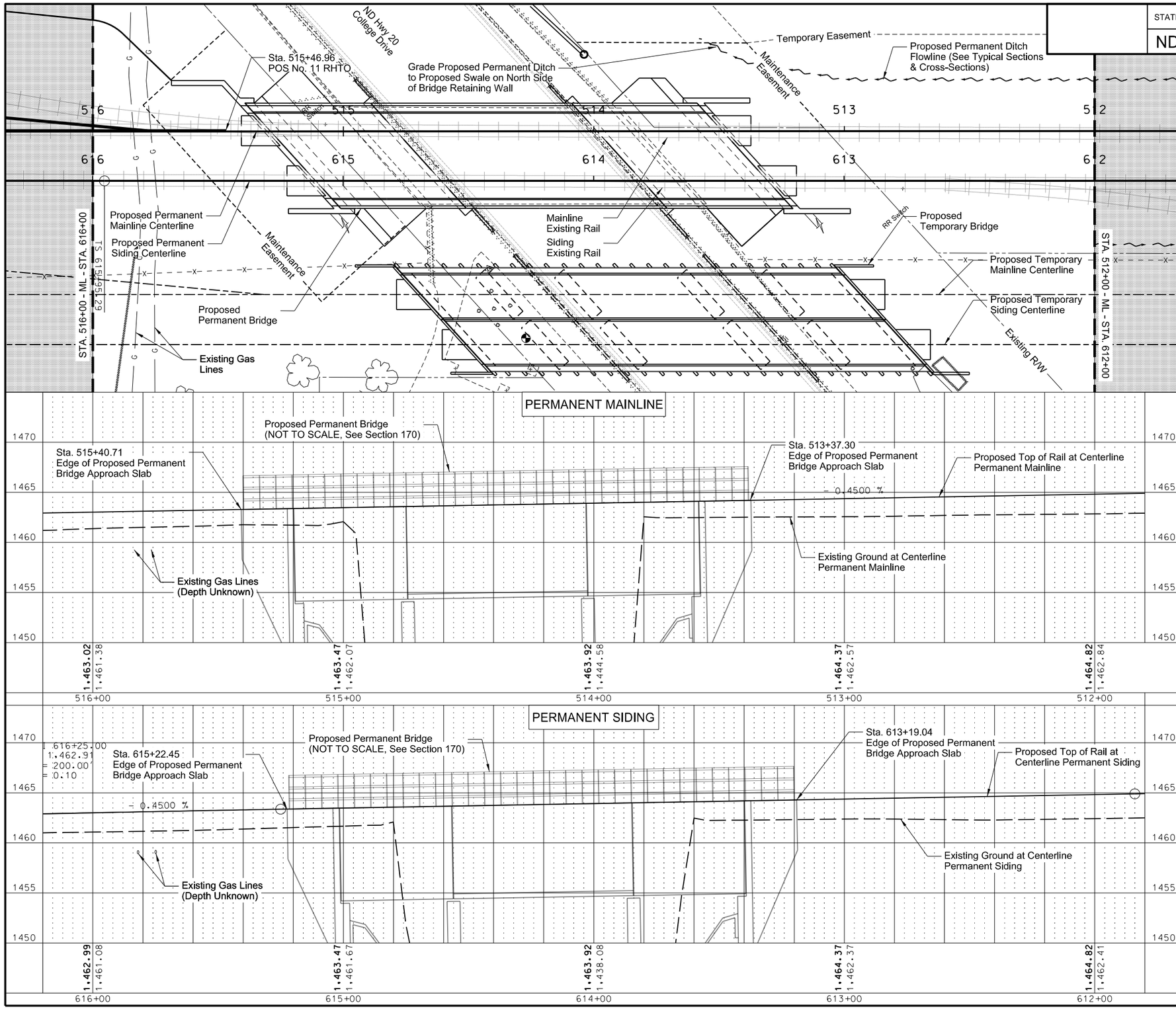

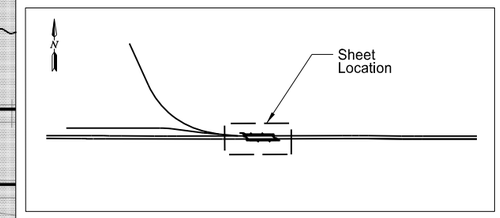

Location Map

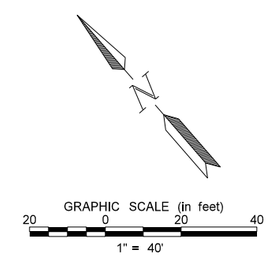

This document was originally issued and sealed by Bradley J. Koon Registration Number PE-10268, on 08/15/16 and the original document is stored at the North Dakota Department of Transportation

PERMANENT MAINLINE & SIDING

Plan & Profile
Sta. 512+00.00 to Sta. 516+00.00
Sta. 612+00.00 to Sta. 616+00.00

STATE	PROJECT NO.	SECTION NO.	SHEET NO.
ND	NHU-3-020(074)103	165	40

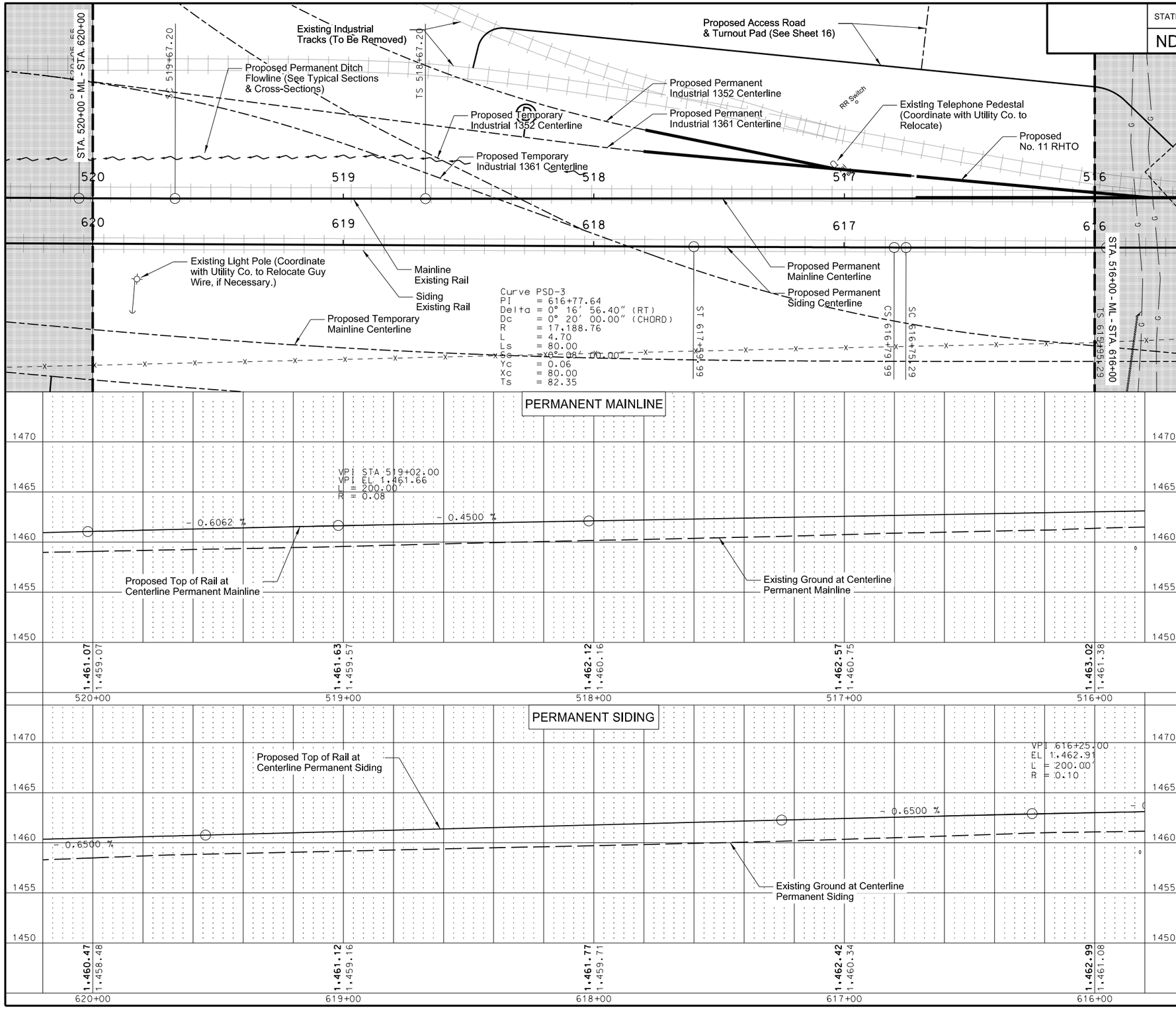

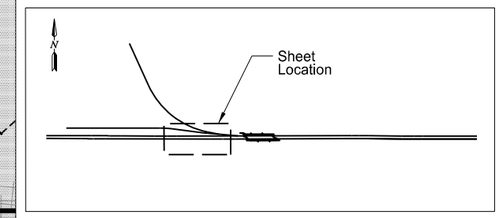

Location Map

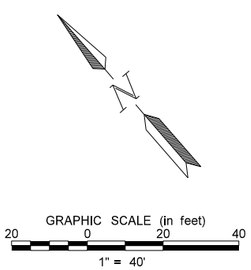

This document was originally issued and sealed by Bradley J. Koon Registration Number PE-10268, on 08/15/16 and the original document is stored at the North Dakota Department of Transportation

PERMANENT MAINLINE & SIDING

Plan & Profile
Sta. 516+00.00 to Sta. 520+00.00
Sta. 616+00.00 to Sta. 620+00.00

STATE	PROJECT NO.	SECTION NO.	SHEET NO.
ND	NHU-3-020(074)103	165	41

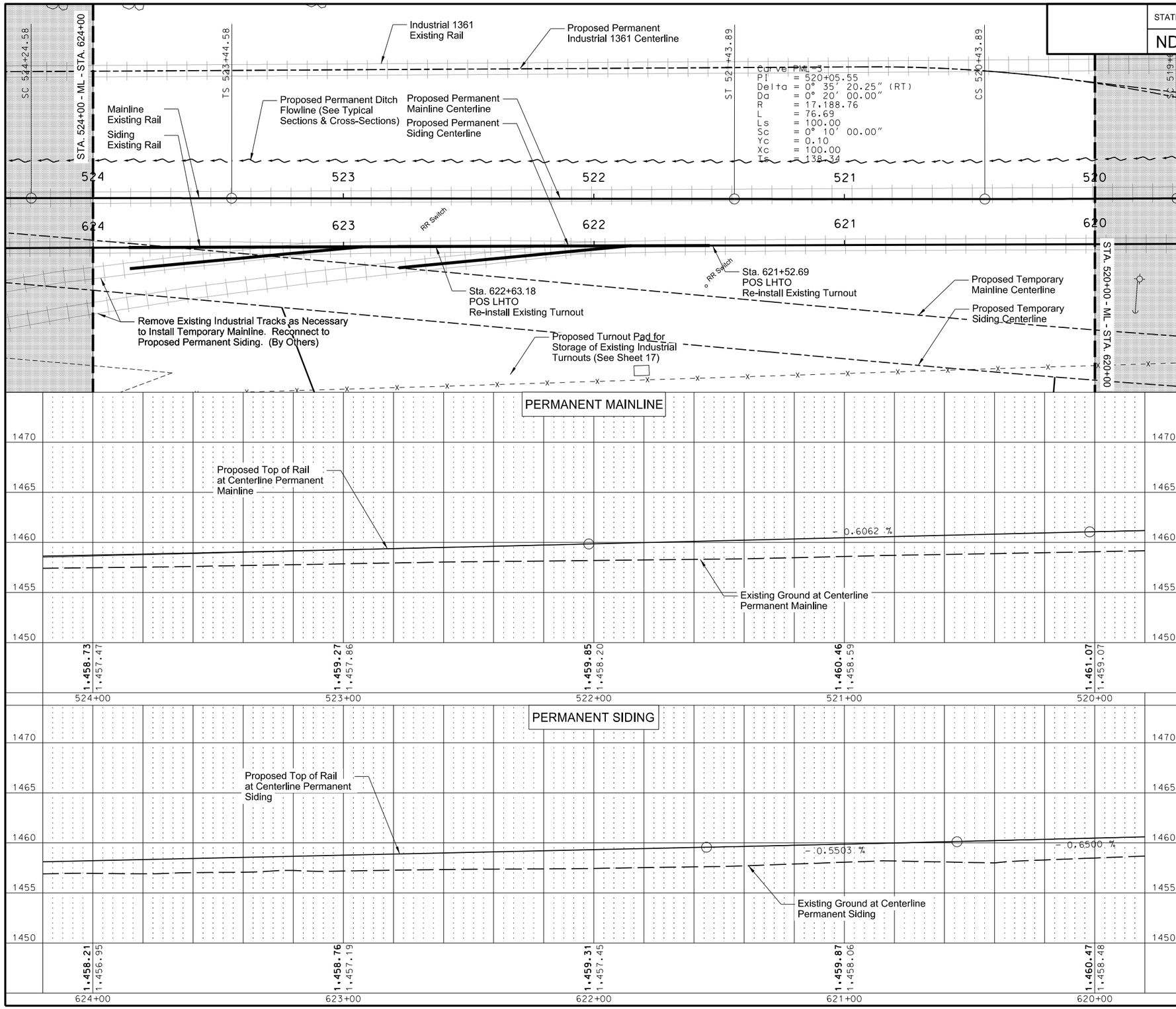

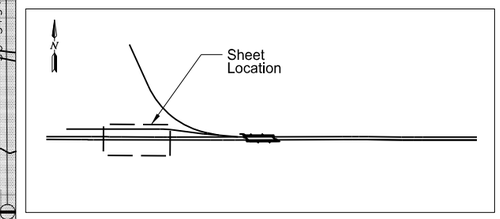

Location Map

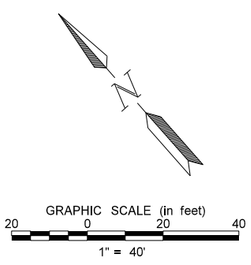

This document was originally issued and sealed by Bradley J. Koon Registration Number PE-10268, on 08/15/16 and the original document is stored at the North Dakota Department of Transportation

PERMANENT MAINLINE & SIDING

Plan & Profile
Sta. 520+00.00 to Sta. 524+00.00
Sta. 620+00.00 to Sta. 624+00.00

STATE	PROJECT NO.	SECTION NO.	SHEET NO.
ND	NHU-3-020(074)103	165	42

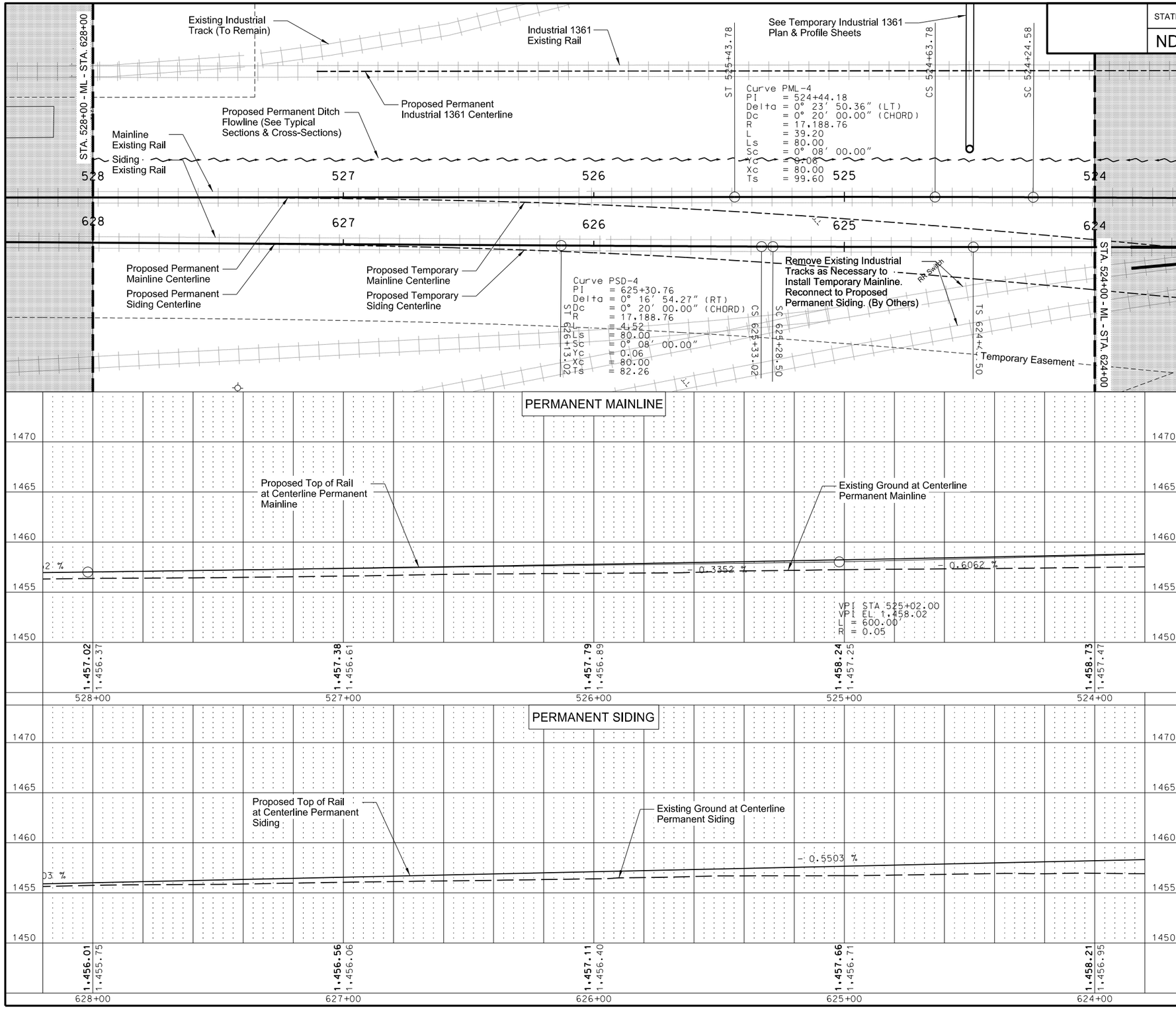

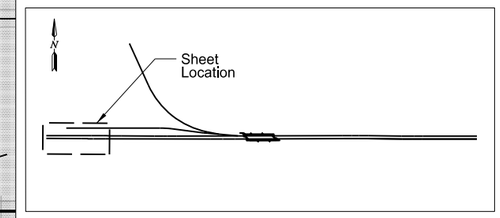

Location Map

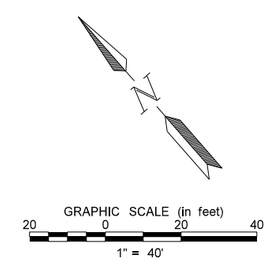

This document was originally issued and sealed by Bradley J. Koon Registration Number PE-10268, on 08/15/16 and the original document is stored at the North Dakota Department of Transportation

PERMANENT MAINLINE & SIDING

Plan & Profile
Sta. 524+00.00 to Sta. 528+00.00
Sta. 624+00.00 to Sta. 628+00.00

STATE	PROJECT NO.	SECTION NO.	SHEET NO.
ND	NHU-3-020(074)103	165	43

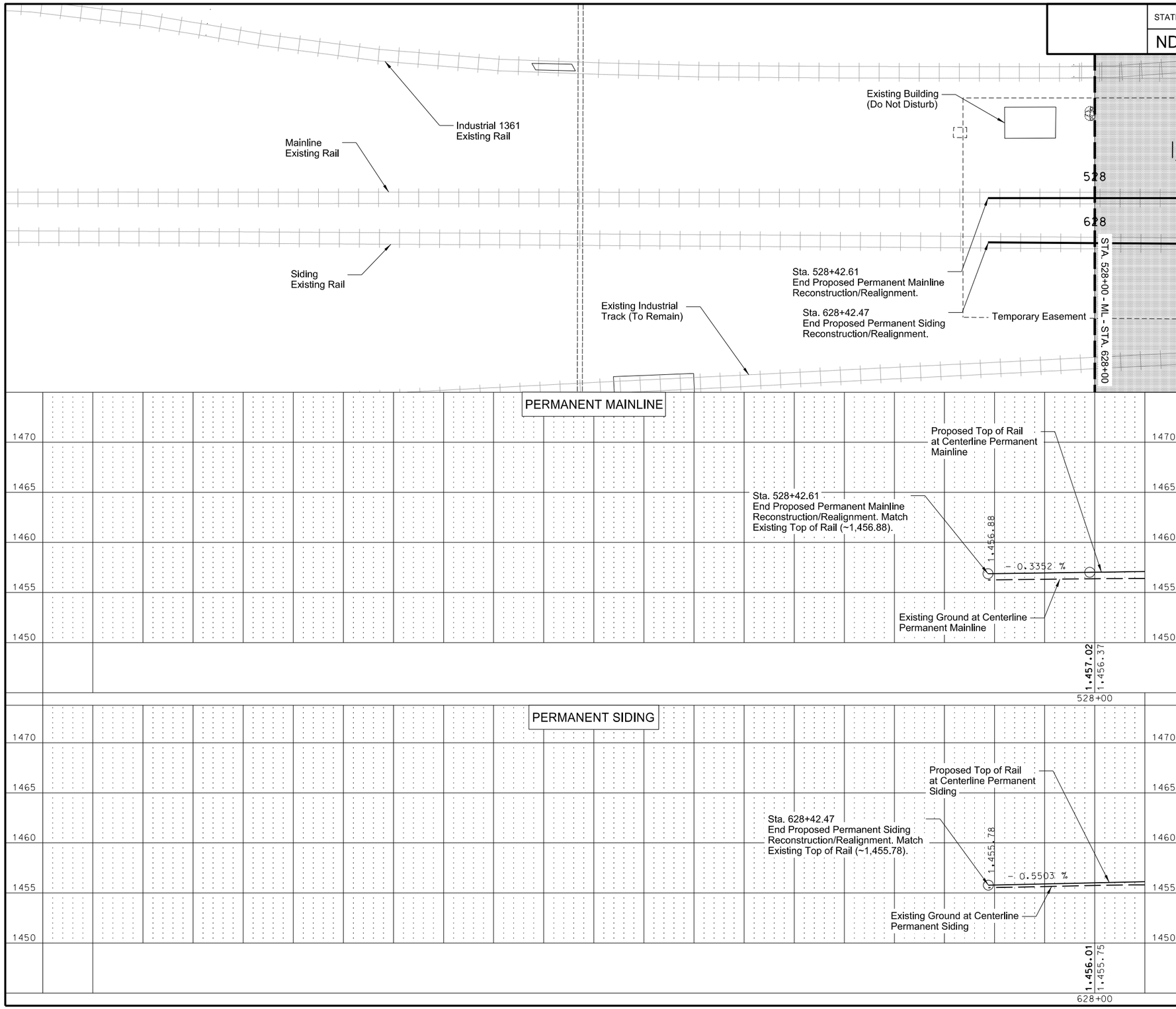

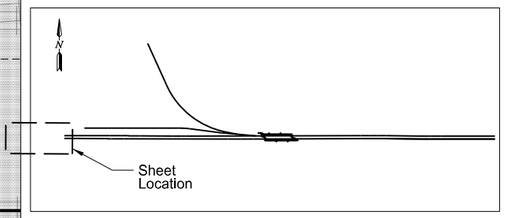

Location Map

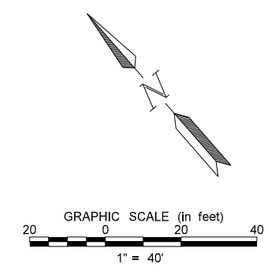

This document was originally issued and sealed by Bradley J. Koon Registration Number PE-10268, on 08/15/16 and the original document is stored at the North Dakota Department of Transportation

PERMANENT MAINLINE & SIDING

Plan & Profile
Sta. 528+00.00 to End
Sta. 628+00.00 to End

STATE	PROJECT NO.	SECTION NO.	SHEET NO.
ND	NHU-3-020(074)103	165	44

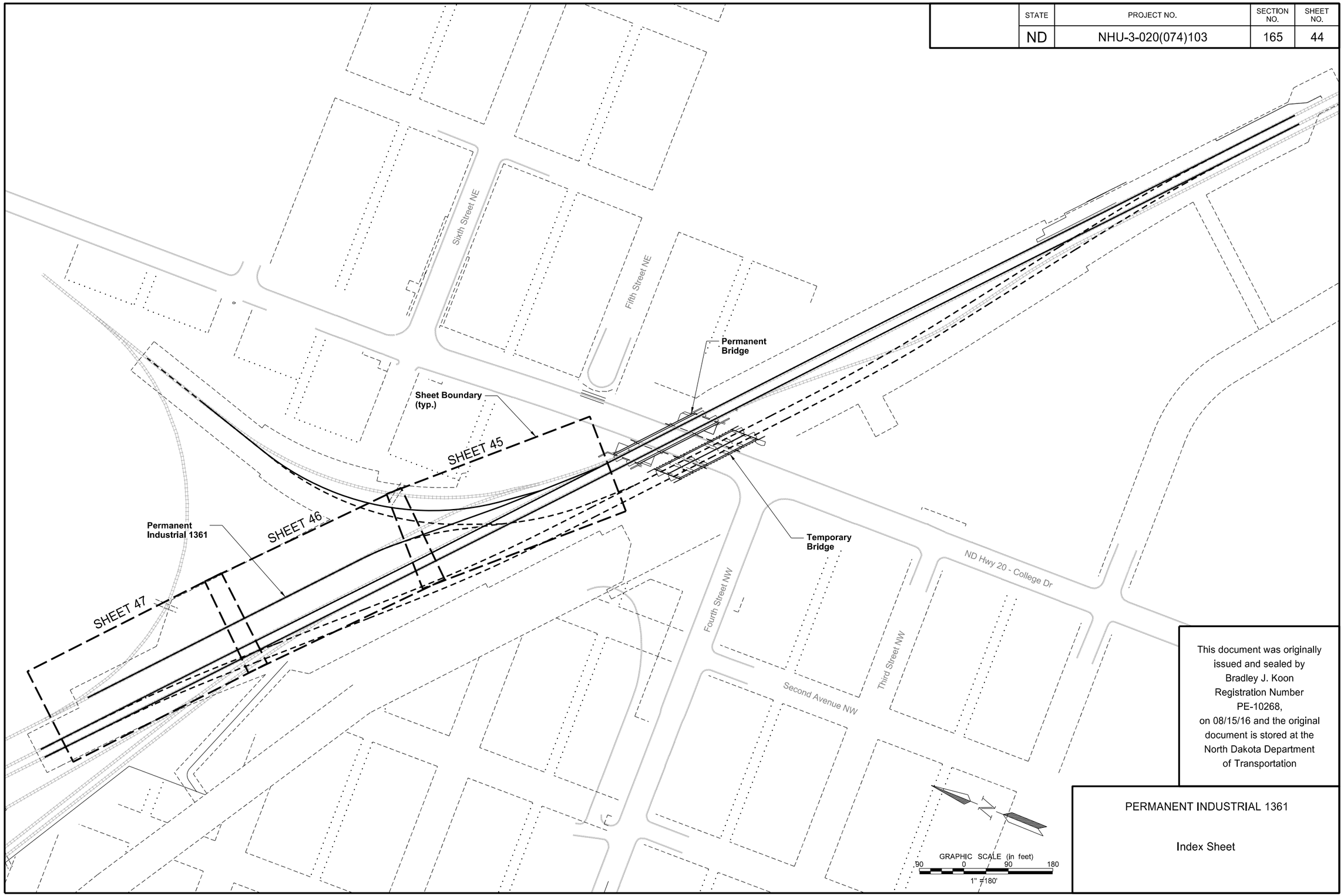

This document was originally issued and sealed by Bradley J. Koon Registration Number PE-10268, on 08/15/16 and the original document is stored at the North Dakota Department of Transportation

PERMANENT INDUSTRIAL 1361

Index Sheet

STATE	PROJECT NO.	SECTION NO.	SHEET NO.
ND	NHU-3-020(074)103	165	45

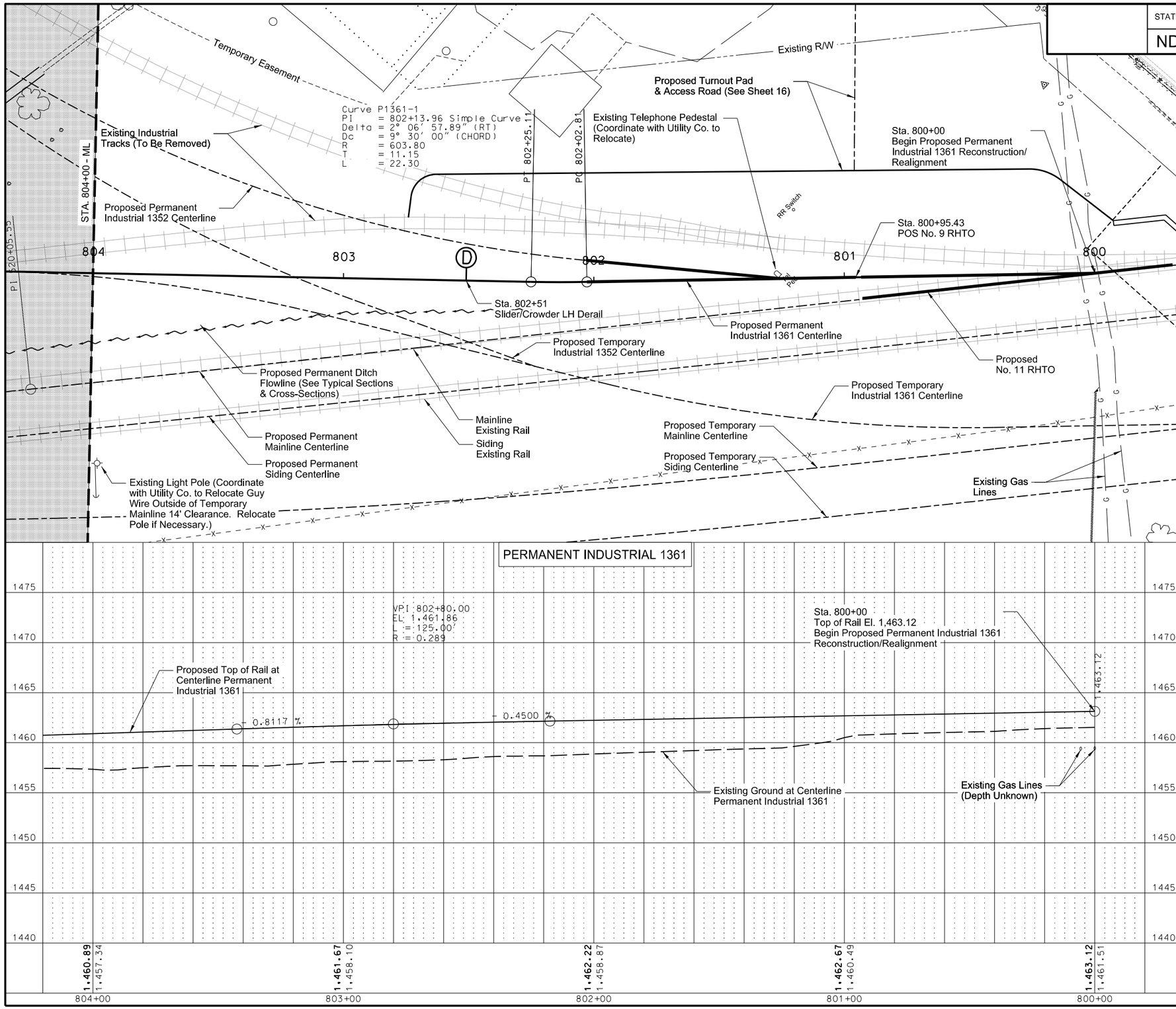

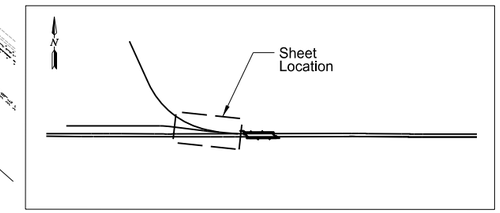

Location Map

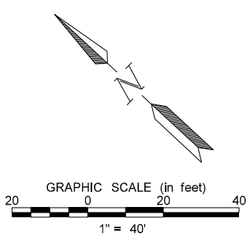

This document was originally issued and sealed by Bradley J. Koon Registration Number PE-10268, on 08/15/16 and the original document is stored at the North Dakota Department of Transportation

PERMANENT INDUSTRIAL 1361

Plan & Profile
Sta. 800+00.00 to Sta. 804+00.00

STATE	PROJECT NO.	SECTION NO.	SHEET NO.
ND	NHU-3-020(074)103	165	46

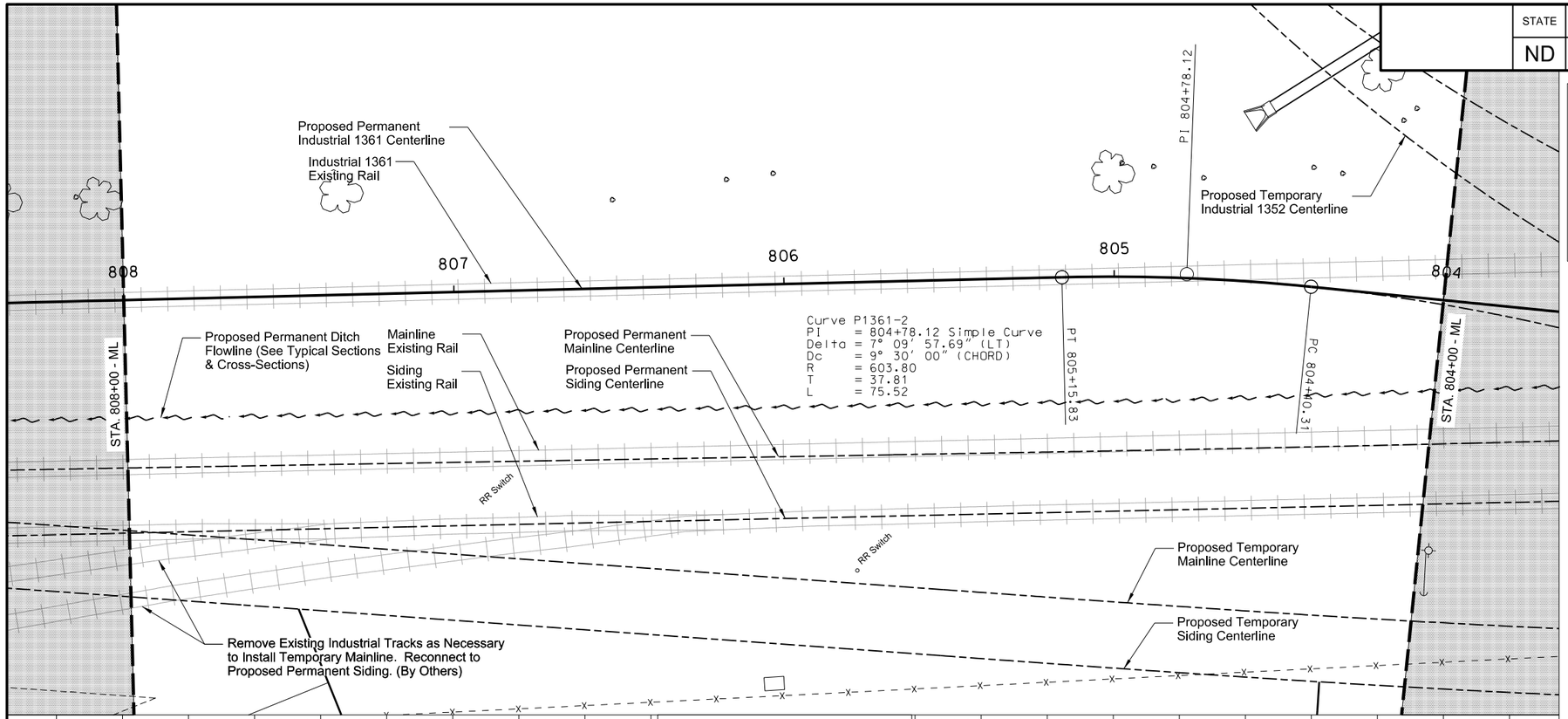

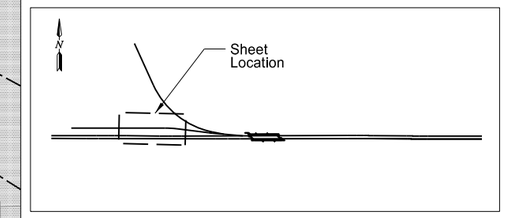

Location Map

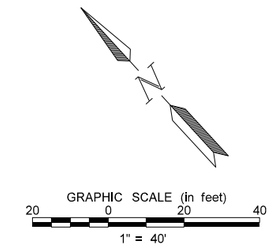

This document was originally issued and sealed by Bradley J. Koon Registration Number PE-10268, on 08/15/16 and the original document is stored at the North Dakota Department of Transportation

PERMANENT INDUSTRIAL 1361

Plan & Profile
Sta. 804+00.00 to Sta. 808+00.00

STATE	PROJECT NO.	SECTION NO.	SHEET NO.
ND	NHU-3-020(074)103	165	47

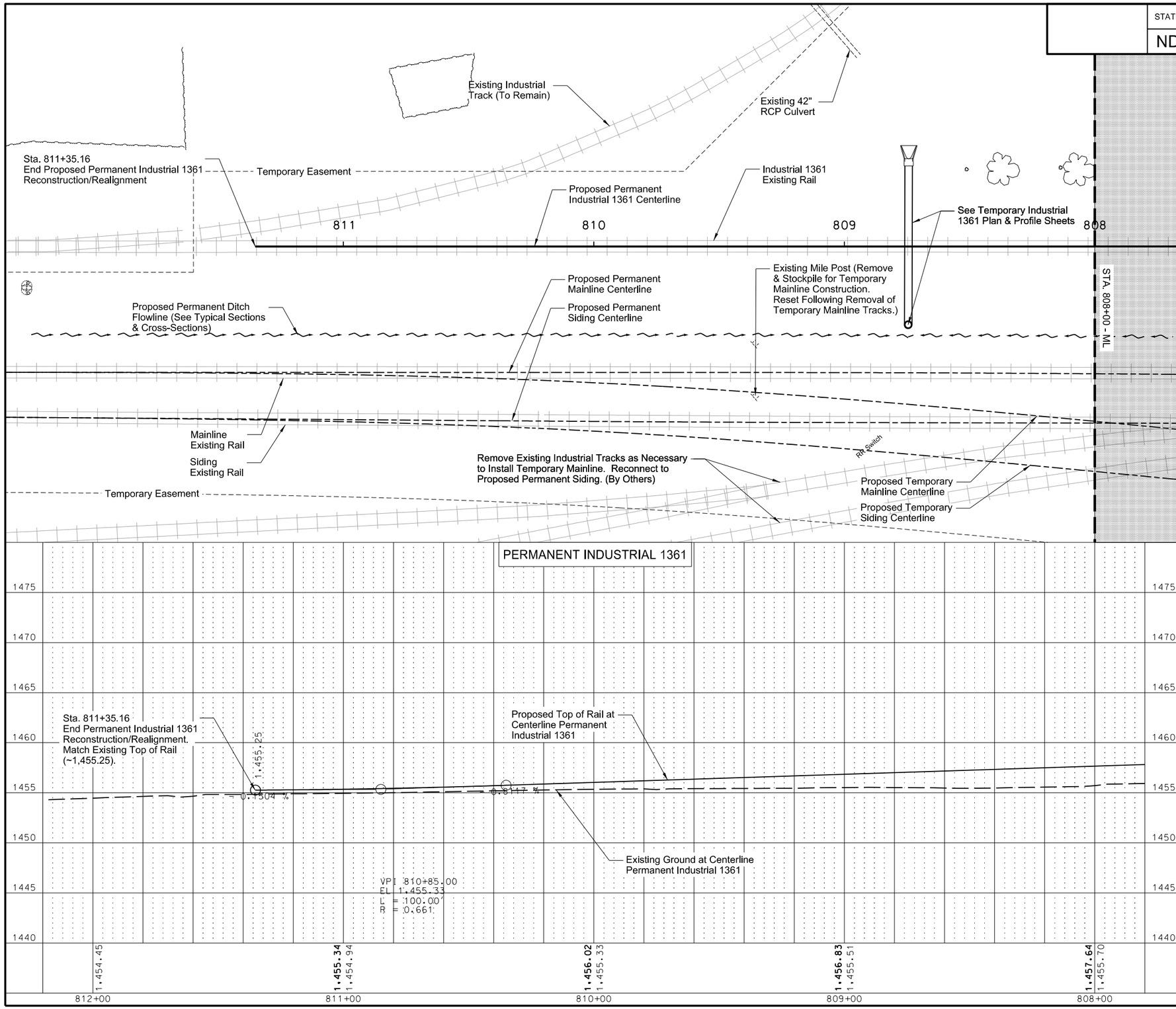

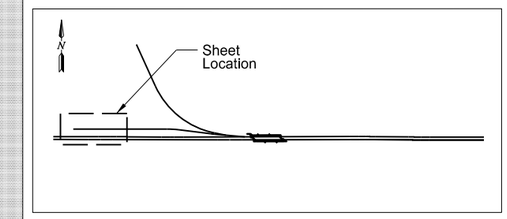

Location Map

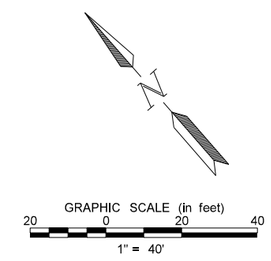

This document was originally issued and sealed by Bradley J. Koon Registration Number PE-10268, on 08/15/16 and the original document is stored at the North Dakota Department of Transportation

PERMANENT INDUSTRIAL 1361

Plan & Profile
Sta. 808+00.00 to End

STATE	PROJECT NO.	SECTION NO.	SHEET NO.
ND	NHU-3-020(074)103	165	48

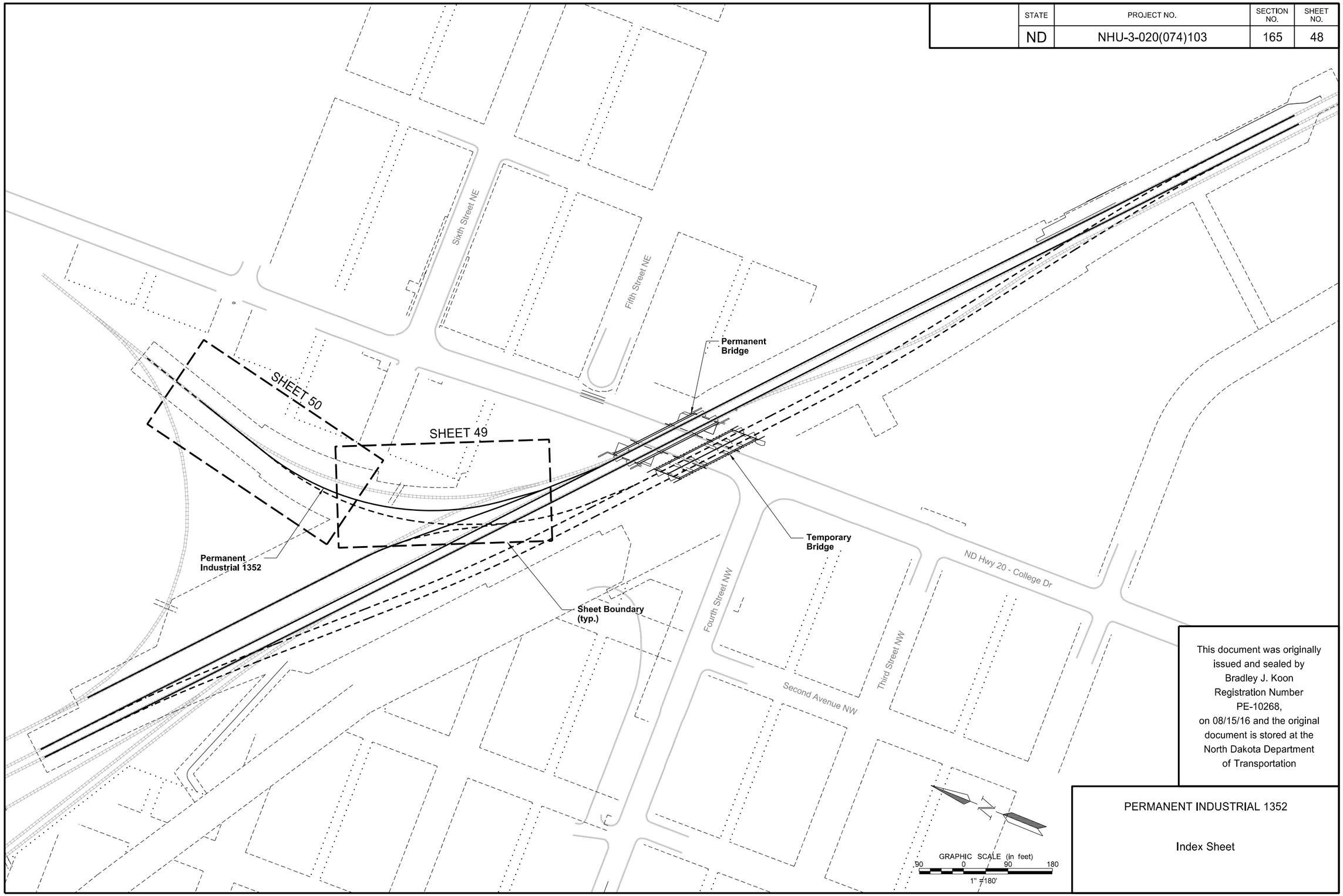

This document was originally issued and sealed by Bradley J. Koon Registration Number PE-10268, on 08/15/16 and the original document is stored at the North Dakota Department of Transportation

PERMANENT INDUSTRIAL 1352

Index Sheet

STATE	PROJECT NO.	SECTION NO.	SHEET NO.
ND	NHU-3-020(074)103	165	49

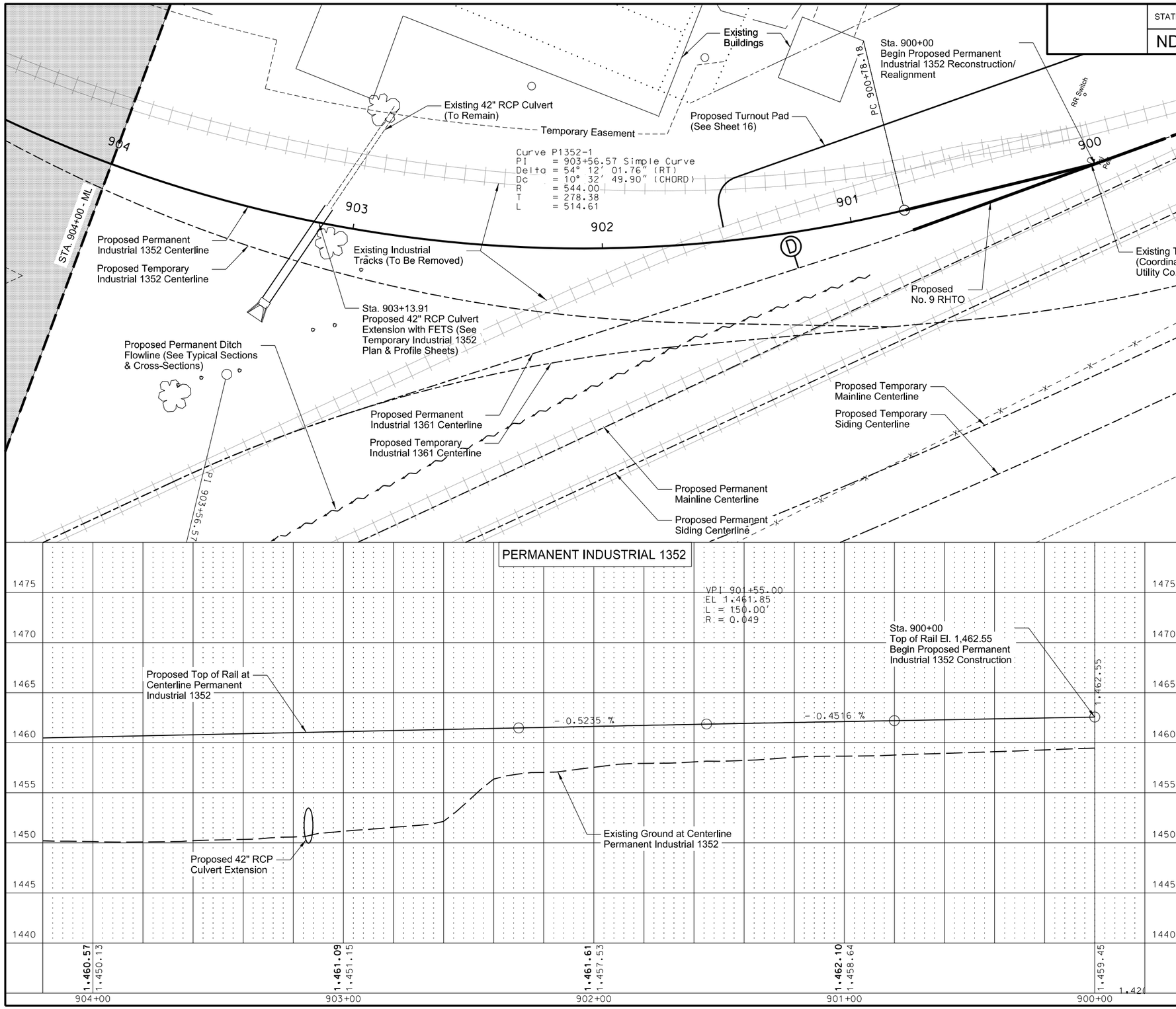

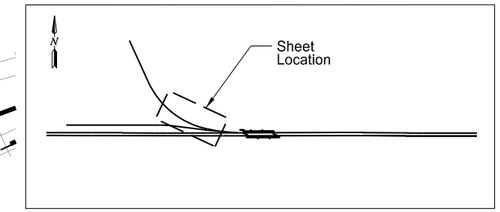

Location Map

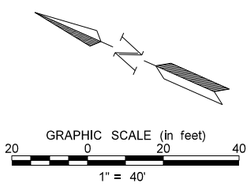

This document was originally issued and sealed by Bradley J. Koon Registration Number PE-10268, on 08/15/16 and the original document is stored at the North Dakota Department of Transportation

PERMANENT INDUSTRIAL 1352

Plan & Profile
Sta. 900+00.00 to Sta. 904+00.00

STATE	PROJECT NO.	SECTION NO.	SHEET NO.
ND	NHU-3-020(074)103	165	50

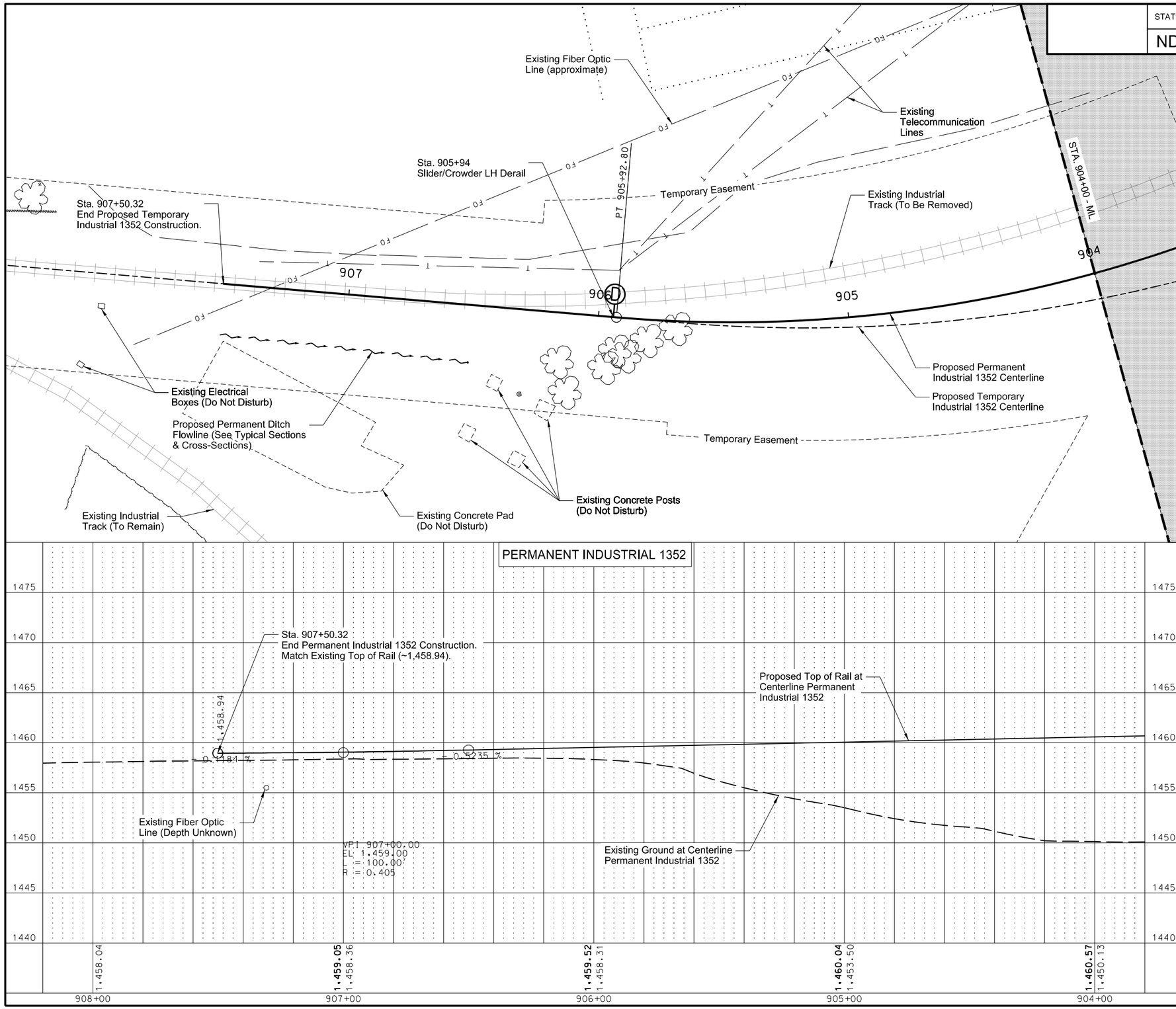

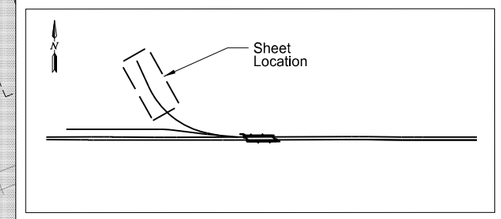

Location Map

GRAPHIC SCALE (in feet)
20 0 20 40
1" = 40'

This document was originally issued and sealed by Bradley J. Koon Registration Number PE-10268, on 08/15/16 and the original document is stored at the North Dakota Department of Transportation

PERMANENT INDUSTRIAL 1352

Plan & Profile
Sta. 904+00.00 to Sta. 908+00.00

BRIDGE CODE		STATE	PROJECT NUMBER	SECTION NO.	SHEET NO.
X631		ND	NHU-3-020(074)103	170	1

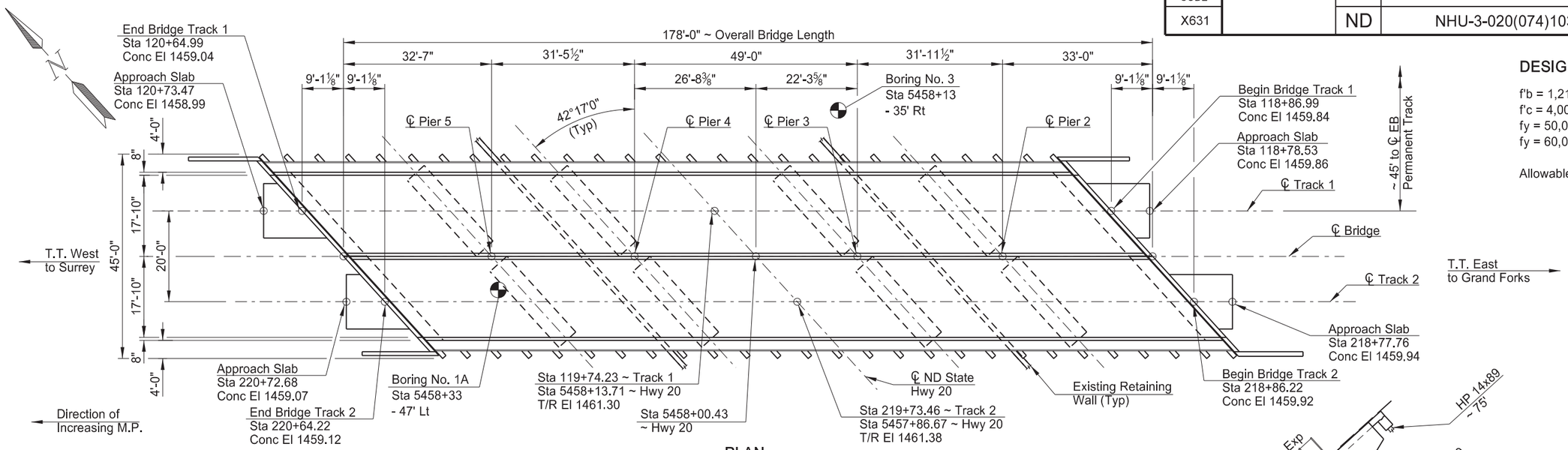

PLAN

T/R = Top of Rail

DESIGN STRENGTHS:

f'b = 1,215 psi ~ Southern Pine No. 1
f'c = 4,000 psi ~ Precast Concrete
fy = 50,000 psi ~ Structural Steel
fy = 60,000 psi ~ Reinforcing Steel

Allowable Stress Design

BRIDGE BID ITEMS

SPEC	CODE	ITEM DESCRIPTION	UNIT	QUANTITY
210	0102	CLASS 1 EXCAVATION - SITE 1	L SUM	1
210	0201	FOUNDATION PREPARATION	EA	1
210	0210	FOUNDATION FILL	CY	84.3
602	1134	PILE SUPPORTED APPROACH SLAB	SY	51.2
602	6001	PRECAST PIER CAP	EA	8
602	6002	PRECAST ABUTMENT	EA	4
602	6005	PRECAST CONCRETE WING WALL	EA	4
616	5890	STRUCTURAL STEEL	L SUM	0.35
618	0115	UNTREATED TIMBER	MBM	51.7
622	0068	STEEL PILING HP 14 X 89	LF	8,120
624	0124	PEDESTRIAN FENCE	LF	351
930	7013	ROADWAY CANOPY - SITE1	L SUM	1

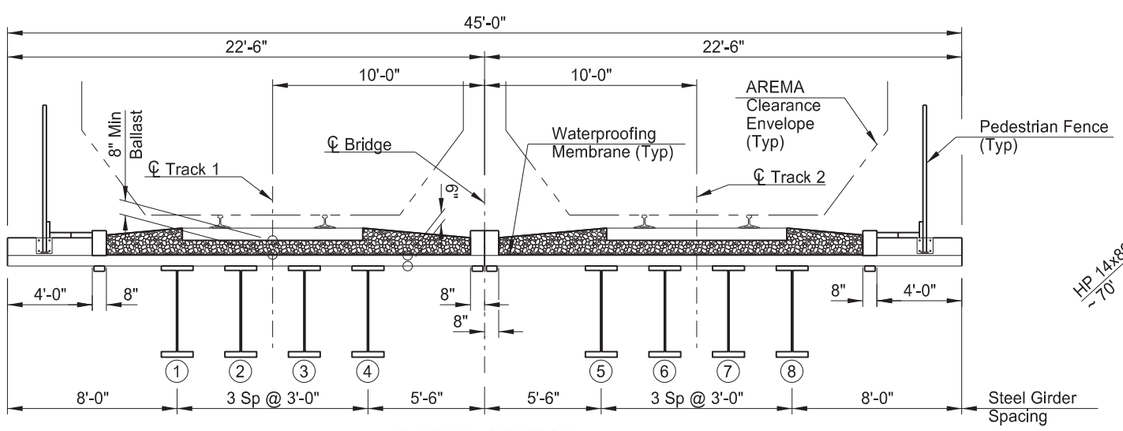

TYPICAL SECTION

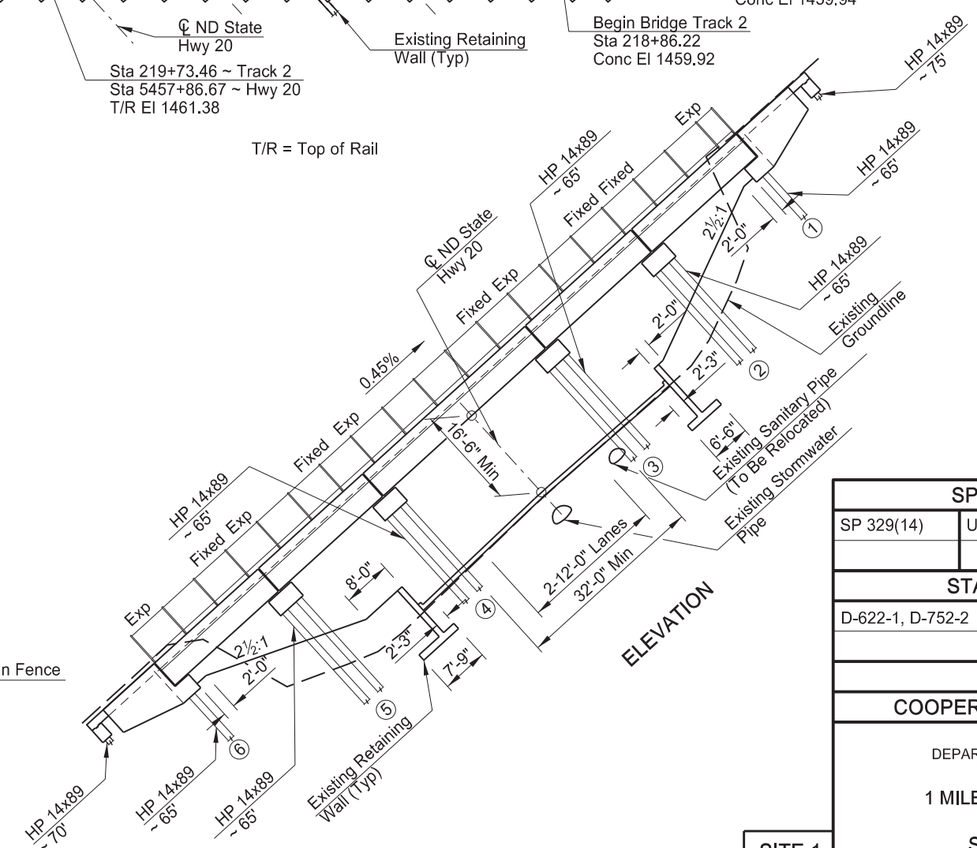

ELEVATION

This document was originally issued and sealed by Colin A. Moran, Registration Number PE 5344, on 08/15/16 and the original document is stored at the North Dakota Department of Transportation

SPECIAL PROVISIONS	
SP 329(14)	UNTREATED TIMBER

STANDARD DRAWINGS

D-622-1, D-752-2

COOPER E80 OR 100 KIP (4 AXLE)

NORTH DAKOTA
DEPARTMENT OF TRANSPORTATION
BNSF RAILWAY
1 MILE NORTH JUNCTION US 2

SHOOFLY LAYOUT
BNSF Ry. Br.0033-0085.600
PROJECT: NHU-3-020(074)103
STATION: 5458+00.43
RAMSEY COUNTY

08/29/16 — DATE
Jon Ketterling /s/ — BRIDGE ENGINEER

SITE 1

SURVEY CONTROL POINTS			
POINT	NORTHING	EASTING	ELEVATION
4	410064.3380	2367815.0500	1445.3140
20	409786.0080	2368197.0630	1442.4510

STRUCTURAL NOTES

100 SCOPE OF WORK: This project consists of building a temporary 5-span rolled steel girder I-beam bridge with an overall bridge length of 178'-0".

100 GENERAL: Include the cost of furnishing and placing preformed expansion joint filler, concrete inserts, neoprene pads, silicone sealant, and other miscellaneous items in the unit price bid for "Precast Abutment" and "Precast Pier Cap".

100 GENERAL: The Contractor is responsible for calling 1-800-533-2891 to arrange for a BNSF underground cable locate. BNSF form "Underground Cable Location & Acknowledge" will be completed by a BNSF representative and a copy provided to the contractor. The contractor must have this completed form in possession at the job site at all times.

100 GENERAL: Follow the construction sequencing found in Section 6, Sheets 2 and 3, Plan Note 704-P02, unless an alternative construction schedule is submitted to and approved by the Engineer.

105 WORK DRAWINGS: Submit the precast concrete pier caps, abutment, and wing walls and laminated deck timber work drawings to the Engineer for review. Use the following minimum text sizes on all work drawing sheets.

Dimensions and Notes = 0.08"
Detail Subtitles = 0.09"
Detail Titles = 0.10"

210 EXCAVATION: Include all excavation at the abutments and approach slab footings, as shown, and any excavation required to build the piers in the lump sum bid item, "Class 1 Excavation-Site 1".

210 FOUNDATION FILL: Provide foundation fill that meets the requirements of Section 816.02, Class 5 and compact in accordance with Section 302.04 B. The Department will only pay for the plan quantity of foundation fill.

210 FOUNDATION PREPARATION: Include the price of providing shoring, if required, in the unit price bid item "Foundation Preparation". Design the shoring in accordance with the joint BNSF/UPRR Guidelines for Temporary Shoring published January 24, 2007.

602 PRECAST CONCRETE: Use Portland Cement concrete of an approved North Dakota Department of Transportation Class "AAE-3" mix having a minimum 28-day compressive strength of 4,000 PSI. Higher strength concrete may be used with the approval of the Engineer.

Tie reinforcing steel securely in place before the concrete is placed.

602 PRECAST PIER CAP: Include all materials and labor for fabricating, furnishing, and installing the precast concrete pier caps in the unit price bit item, "Precast Pier Cap".

602 PRECAST ABUTMENTS: Include all materials and labor for fabricating, furnishing and installing of the precast concrete abutments in the unit price bid item, "Precast Abutment".

602 PRECAST CONCRETE WING WALL: Include all materials and labor for fabricating, furnishing, and installing of the precast concrete wing walls at the abutments in the unit price bid item, "Precast Concrete Wing Wall".

616 STRUCTURAL STEEL: Include the cost of fabricating, furnishing, and erecting the steel girders and diaphragms in the lump sum bid for this item. Include the cost for fabricating and furnishing the bearing plates, bearing stiffeners, jacking stiffeners and connection angles in the lump sum bid for this item. The estimated weight of steel is 366,000 lbs and does not include weight of welds, bolts or deductions for holes.

Steel for the shoofly superstructure, as indicated on the shoofly bridge plans, will be supplied by the Contractor. Include the cost of loading, hauling, unloading, and erecting the structural steel in the lump sum bid for this item. The Contractor must take care not to damage the steel during the loading, hauling, unloading and erecting operations. Repair to damaged steel during the loading, hauling, unloading, or erecting operations will be at the Contractor's expense.

616 GIRDER SETTING: Set the girders above the traveled roadways between the hours of 10:00 p.m. and 5:00 a.m.

618 WATERPROOFING: Install a puncture resistant waterproofing material on the top surface of the deck and inside face of the ballast stops. Acceptable materials are tarred paper, polyethylene plastic or an approved equal. Provide a material data sheet for approval prior to installation. Include all costs for supplying and installing the waterproofing in the unit price bid item, "Untreated Timber".

This document was originally issued and sealed by Colin A. Moran, Registration Number PE 5344, on 08/26/16 and the original document is stored at the North Dakota Department of Transportation

BNSF RAILWAY
1 MILE NORTH OF US 2

BNSF Ry. Br.0033-0085.600
SHOOFLY BRIDGE

STRUCTURAL NOTES

STRUCTURAL NOTES

622 **FRICTION REDUCTION MATERIAL:** Apply a friction reduction material to each pile at Abutment 1, Pier 2, Pier 5 and Abutment 6. Acceptable friction reduction materials are Bitumin Coating, Yellow Jacket pile sleeves or Slickcoat epoxy coating. The reduction material must be applied to all surfaces of each pile from ground level to an elevation of 1435.0. No reduction material may be applied below 1435.0. Include all costs for supplying and installing the friction reduction material in the unit price bid item "Steel Piling HP 14 x 89".

622 **PILING:** Drive piling with a steam, air, or diesel hammer with a rated energy and ram weight not less than 103,640 foot-pound-tons, as computed by the formula W(E-22,592) + 0.918E, where W is the weight of the ram in tons and E is the rated hammer energy. In no case is the ram weight to be less than 4,000 pounds. The hammer must be run at an energy that produces a penetration at bearing between ½" and 3 inches in the last 10 blows.

930 **ROADWAY CANOPY-SITE 1:** Construct a canopy above the traveled roadway and sidewalks under the new structure to protect traffic and pedestrians from falling material. The canopy is an added safeguard and does not relieve the Contractor of any responsibility for the safety of the public.

Erect the canopy before installing the new deck and will remain in place until after the new superstructure is complete. The canopy may be supported from the ground or suspended from the beams. Complete the erection of the canopy in a minimum amount of time and with the least inconvenience to the public.

The canopy must be of a design and material selected by the Contractor and submitted to the Engineer for review. The minimum vertical clearance from the traveled roadway to the bottom of the canopy will be 15'-6". The minimum vertical clearance from the sidewalk to the bottom of the canopy will be 8'-0".

The canopy will project a minimum distance of 5'-0" beyond the outside edge of the deck of the structure. The canopy will project a minimum distance of 5'-0" beyond the edge of the driving lanes beneath the structure.

After completion of the structure, the canopy must be removed and will remain the property of the Contractor. Include the construction, maintenance and removal of the roadway canopy in the contract lump sum unit price for "Roadway Canopy-Site 1".

980 **BALLAST:** The ballast is to be supplied and placed by others.

DESIGN LOAD:

Live Load = Cooper E-80
Impact = AREMA for rolling equipment without hammer blow
Other Loads = AREMA
Maximum Ballast Depth = 20 inches

DESIGN GUIDELINE: AREMA 2015 Manual for Railway Engineering.

All welding will be in accordance with the AREMA Manual and the ANSI/AASHTO/AWS D1.5-2015 Bridge Welding Code.

DESIGN STRESSES: Design stresses for the following materials are in accordance with the AREMA Manual.

Structural steel in accordance with AREMA, Chapter 15 "Steel Structures", ASTM A709 GR. 50 Fy = 50,000 PSI.

Reinforcing steel in accordance with AREMA, Chapter 8 "Concrete Structures and Foundations", ASTM A615 Fy = 60,000 PSI.

Steel Piling in accordance with ASTM A572 GR. 50 Fy = 50,000 PSI.

WORK **DRAWINGS:** Submit the following work drawings to the Engineer for review.

1. Precast Pier Caps
2. Precast Concrete Wing wall
3. Precast Abutment
4. Laminated Deck Timber

This document was originally issued and sealed by Colin A. Moran, Registration Number PE 5344, on 08/26/16 and the original document is stored at the North Dakota Department of Transportation

BNSF RAILWAY
1 MILE NORTH OF US 2

BNSF Ry. Br.0033-0085.600
SHOOFLY BRIDGE

STRUCTURAL NOTES

STATE	PROJECT NUMBER	SECTION NO.	SHEET NO.
ND	NHU-3-020(074)103	170	4

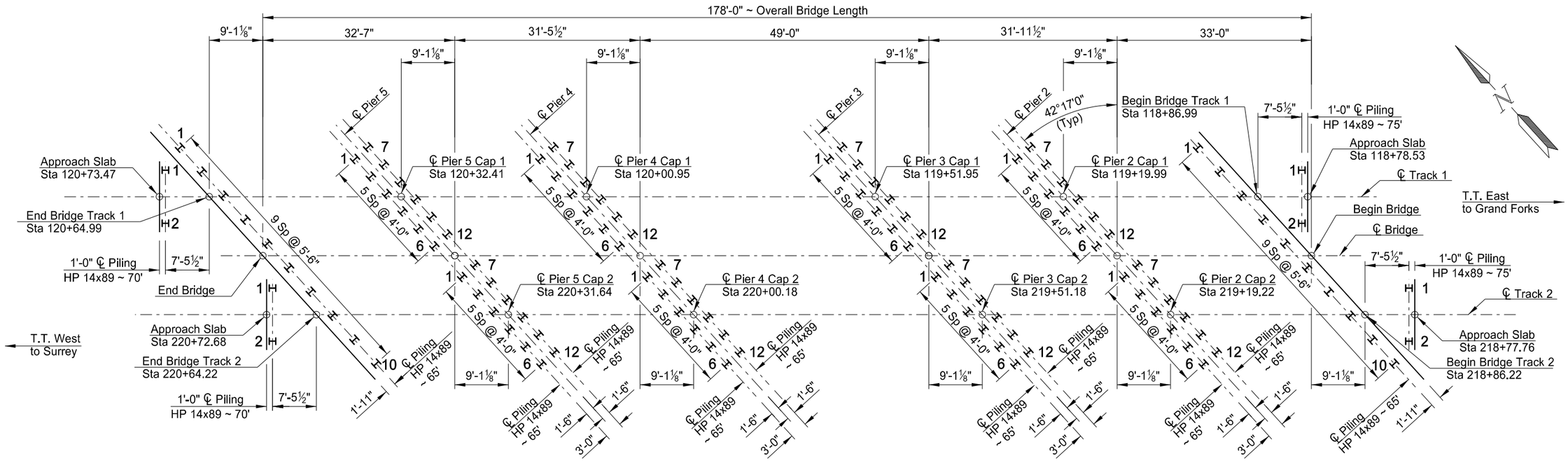

PILING LAYOUT

Drive HP 14x89 piles to 164 tons.

NOTE:

For double acting or single acting diesel hammers, calculate the safe bearing value of piles by the following formula:

$$P = \frac{3.5E}{S + 0.2} \times \frac{W + 0.2M}{W + M}$$

Where:
P = Safe bearing value, in pounds.
W = Weight of striking parts (ram), in pounds.
M = Weight of parts being driven, in pounds. Includes pile weight, anvil (if any), driving cap, etc.
E = Energy per blow, in foot-pounds.
S = Average penetration of pile in inches per blow for last ten blows for ten blows for steam, air, or diesel hammer.

For single acting hammers, calculate E by multiplying observed stroke (ft) and W (lbs).

SHOOFLY BRIDGE PILE COORDINATES

	PILE	NORTHING	EASTING	CUTOFF ELEV
NE APPR	1	409,913.9609	2,368,228.5778	1456.86
	2	409,907.1662	2,368,222.6759	1456.86
SE APPR	1	409,886.9346	2,368,229.1938	1456.94
	2	409,880.1399	2,368,223.2919	1456.94
ABUT 1	1	409,928.3825	2,368,217.7857	1452.80
	10	409,878.8953	2,368,218.9136	1452.95
PIER 2 CAP 1	1	409,947.0567	2,368,193.3563	1452.66
	6	409,927.0619	2,368,193.8120	1452.72
	7	409,947.1250	2,368,196.3555	1452.67
	12	409,927.1302	2,368,196.8112	1452.73
PIER 2 CAP 2	1	409,920.0303	2,368,193.9722	1452.74
	6	409,900.0355	2,368,194.4280	1452.80
	7	409,920.0987	2,368,196.9715	1452.75
	12	409,900.1039	2,368,197.4272	1452.81

	PILE	NORTHING	EASTING	CUTOFF ELEV
PIER 3 CAP 1	1	409,968.0138	2,368,169.2288	1452.36
	6	409,948.0190	2,368,169.6846	1452.42
	7	409,968.0822	2,368,172.2281	1452.37
	12	409,948.0874	2,368,172,6838	1452.43
PIER 3 CAP 2	1	409,940.9875	2,368,169.8448	1452.44
	6	409,920.9927	2,368,170.3005	1452.50
	7	409,941.0559	2,368,172.8440	1452.45
	12	409,921.0611	2,368,173.2998	1452.51
PIER 4 CAP 1	1	410,000.1463	2,368,132.2356	1452.14
	6	409,980.1515	2,368,132.6913	1452.20
	7	410,000.2147	2,368,135.2348	1452.15
	12	409,980.2199	2,368,135.6905	1452.21
PIER 4 CAP 2	1	409,973.1200	2,368,132.8515	1452.22
	6	409,953.1252	2,368,133.3073	1452.28
	7	409,973.1883	2,368,135.8508	1452.23
	12	409,953.1935	2,368,136.3065	1452.29

	PILE	NORTHING	EASTING	CUTOFF ELEV
PIER 5 CAP 1	1	410,020.7756	2,368,108.4856	1452.16
	6	410,000.7808	2,368,108.9413	1452.22
	7	410,020.8440	2,368,111.4898	1452.17
	12	410,000.8492	2,368,111.9406	1452.23
PIER 5 CAP 2	1	409,993.7493	2,368,109.1016	1452.24
	6	409,973.7545	2,368,109.5573	1452.30
	7	409,993.8176	2,368,112.1008	1452.25
	12	409,973.8228	2,368,112.5565	1452.31
ABUT 6	1	410,041.7109	2,368,087.3137	1452.02
	10	409,992.2238	2,368,088.4416	1452.17
NW APPR	1	410,040.4664	2,368,082.9354	1455.99
	2	410,033.6717	2,368,077.0336	1455.99
SW APPR	1	410,013.4401	2,368,083.5514	1456.07
	2	410,006.6454	2,368,077.6495	1456.07

This document was originally issued and sealed by Colin A. Moran, Registration Number PE 5344, on 08/15/16 and the original document is stored at the North Dakota Department of Transportation

BNSF RAILWAY
1 MILE NORTH OF US 2

BNSF Ry. Br.0033-0085.600
SHOOFLY BRIDGE

PILE LAYOUT

STATE	PROJECT NUMBER	SECTION NO.	SHEET NO.
ND	NHU-3-020(074)103	170	5

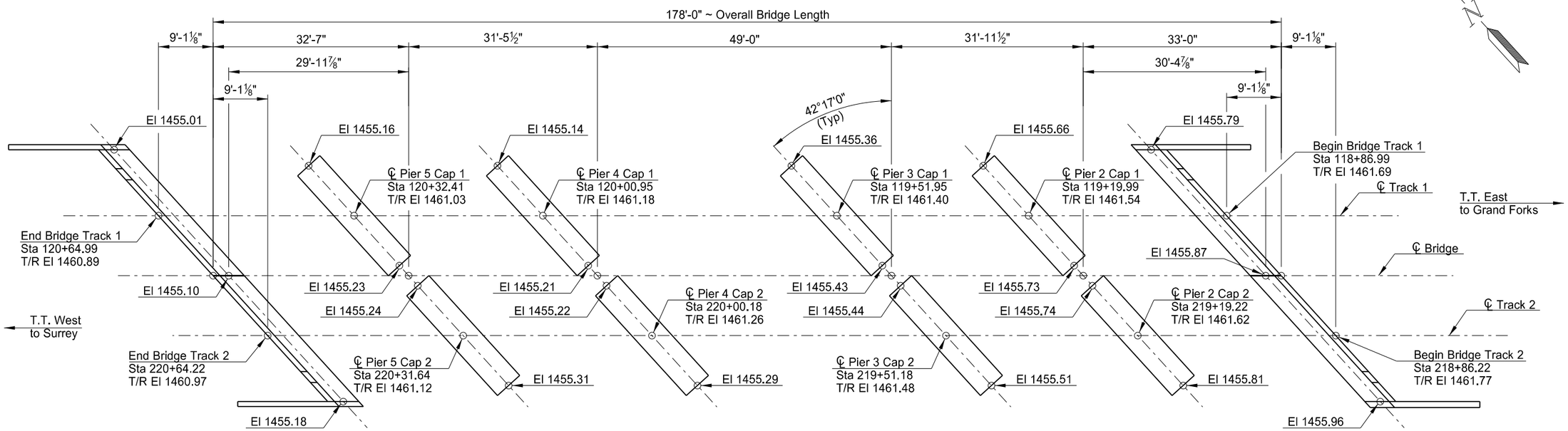

T/R = Top of Rail

BEARING ELEVATIONS

Elevations shown are top of finished concrete.

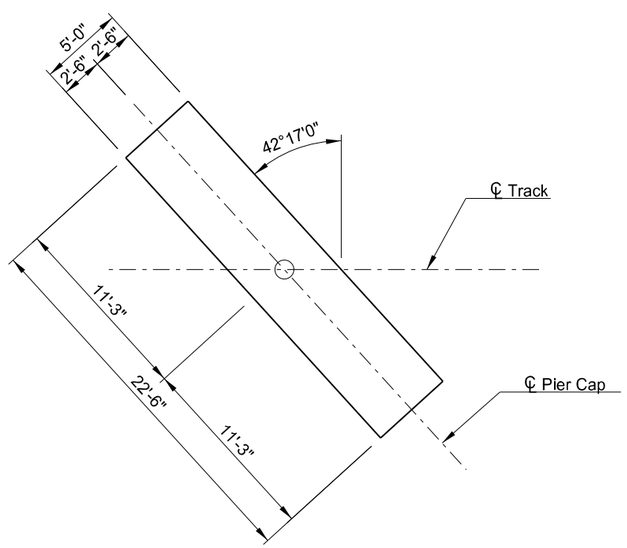

CAP PLACEMENT

This document was originally issued and sealed by Colin A. Moran, Registration Number PE 5344, on 08/15/16 and the original document is stored at the North Dakota Department of Transportation

ESTIMATED LIFTING WEIGHTS

ABUTMENT SECTION	31.5 TON	WINGWALL	4.8 TON	PIER CAP	25.3 TON
GIRDERS:		SPAN WEIGHTS (W/ DECK):		SPAN WEIGHTS (W/O DECK):	
SPAN 1	2.4 TON	SPAN 1	23.8 TON	SPAN 1	12.0 TON
SPAN 2	2.4 TON	SPAN 2	23.7 TON	SPAN 2	12.0 TON
SPAN 3	7.9 TON	SPAN 3	53.5 TON	SPAN 3	35.3 TON
SPAN 4	2.3 TON	SPAN 4	23.4 TON	SPAN 4	11.8 TON
SPAN 5	2.3 TON	SPAN 5	23.5 TON	SPAN 5	11.8 TON

BNSF RAILWAY
1 MILE NORTH OF US 2

BNSF Ry. Br.0033-0085.600
SHOOFLY BRIDGE

BEARING ELEVATIONS

STATE	PROJECT NUMBER	SECTION NO.	SHEET NO.
ND	NHU-3-020(074)103	170	6

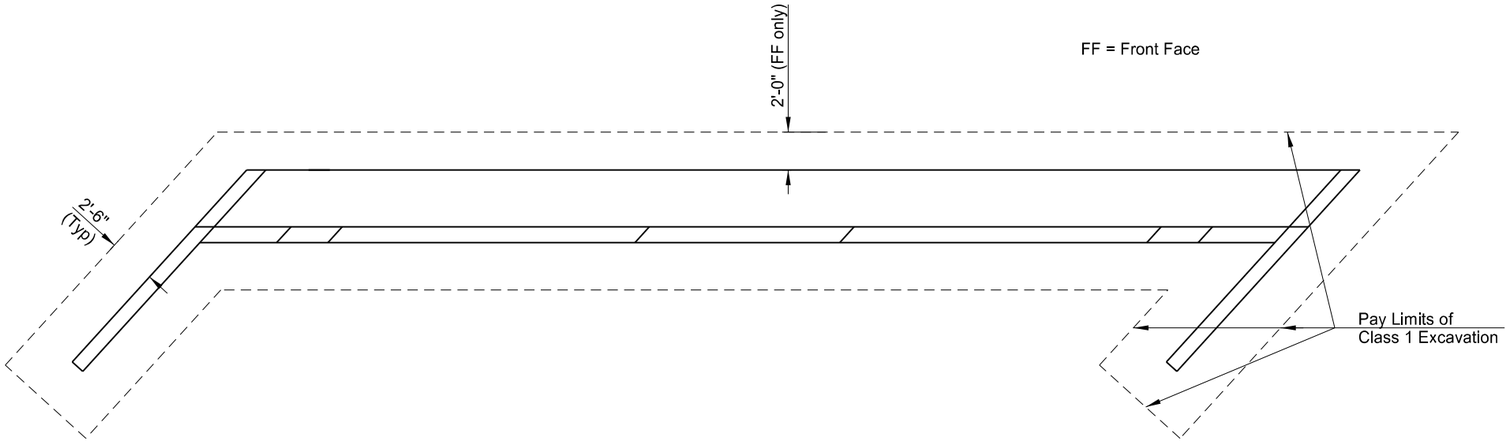

ABUTMENT PLAN

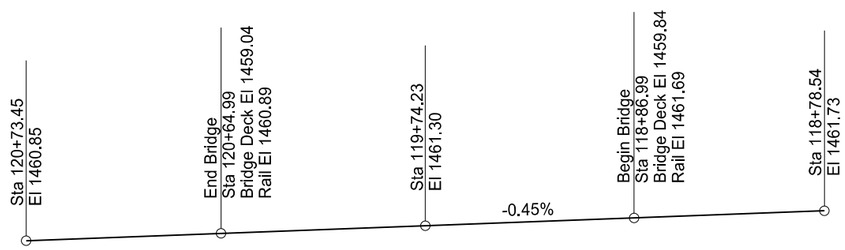

VERTICAL CURVE DATA
AT ℄ TRACK 1

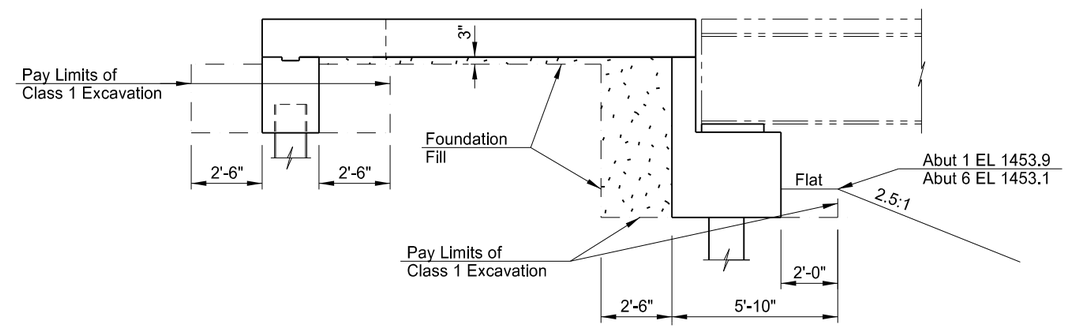

DETAIL AT ABUTMENT

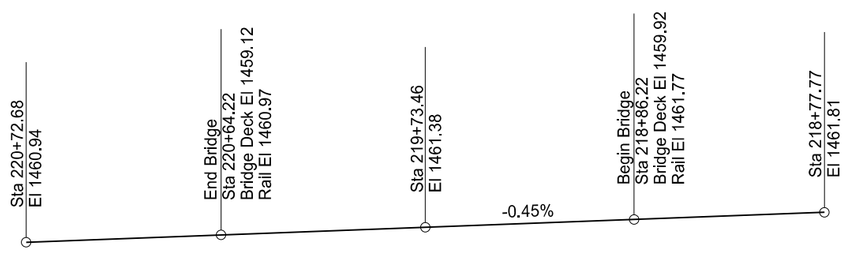

VERTICAL CURVE DATA
AT ℄ TRACK 2

This document was originally issued and sealed by Colin A. Moran, Registration Number PE 5344, on 08/15/16 and the original document is stored at the North Dakota Department of Transportation

BNSF RAILWAY
1 MILE NORTH OF US 2

BNSF Ry. Br.0033-0085.600
SHOOFLY BRIDGE

VERTICAL CURVE,
EXCAVATION & BACKFILL

STATE	PROJECT NUMBER	SECTION NO.	SHEET NO.
ND	NHU-3-020(074)103	170	7

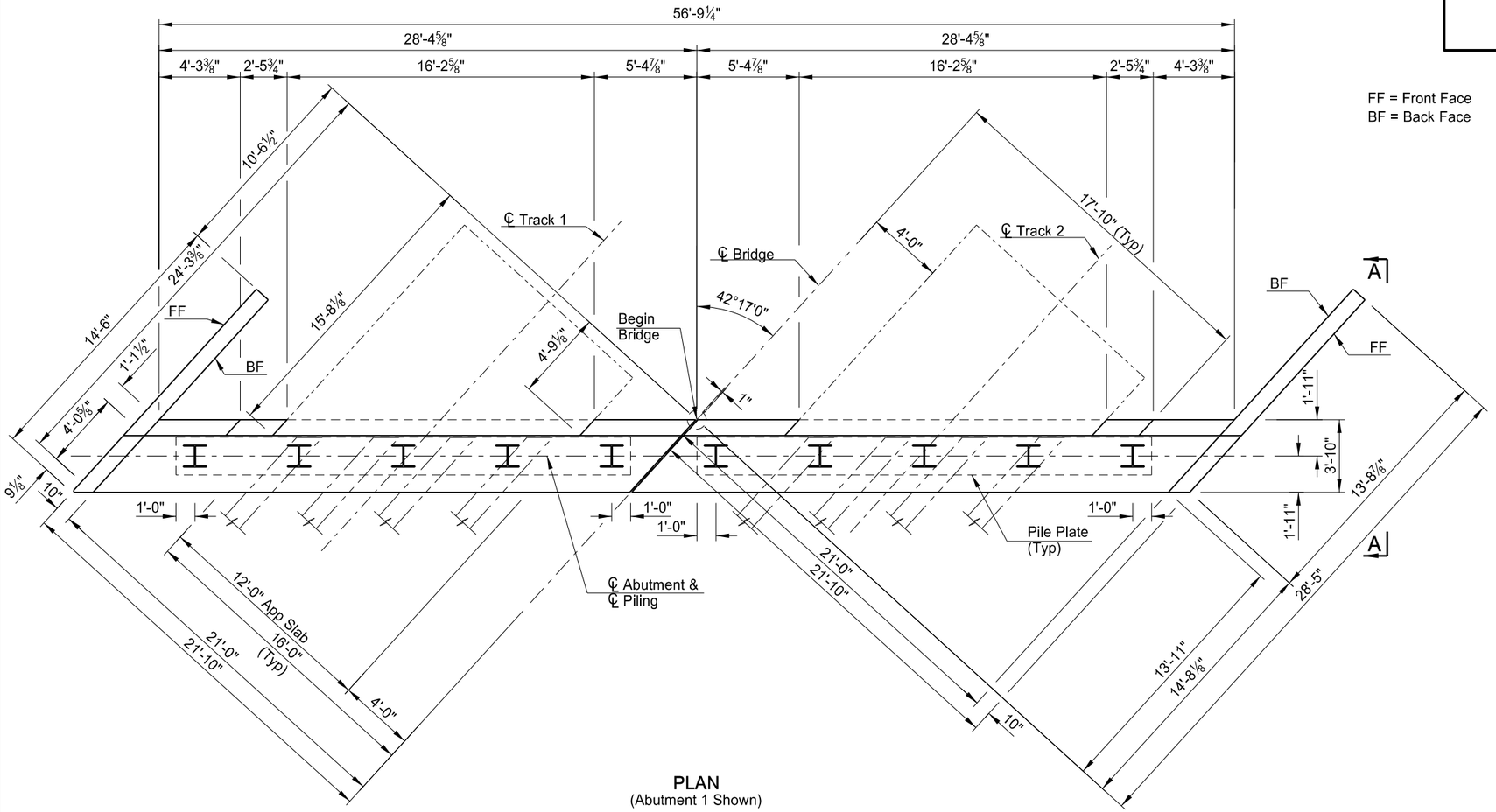

PLAN
(Abutment 1 Shown)

FF = Front Face
BF = Back Face

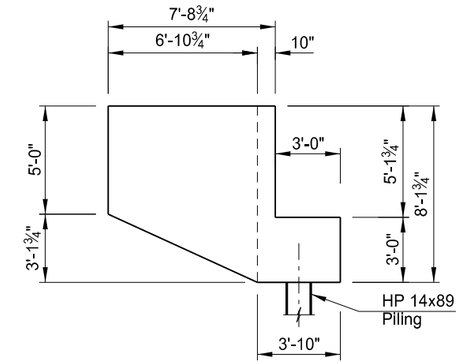

A-A
(See Dwg 20-103.403-8 for Skewed Dimensions)

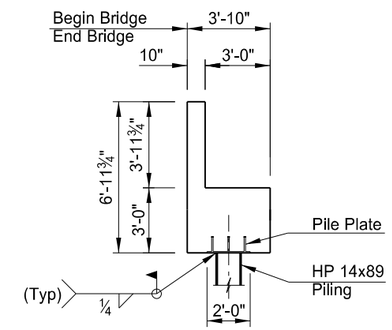

B-B

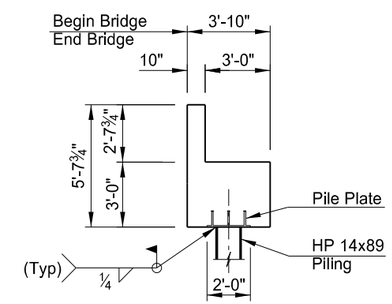

C-C

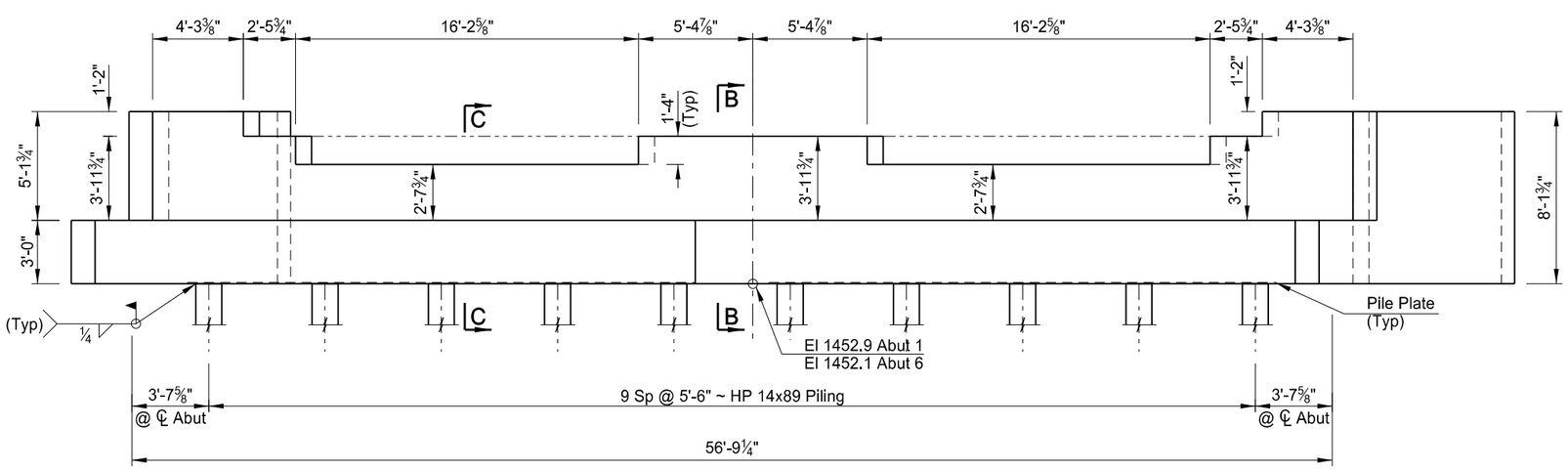

ELEVATION

This document was originally issued and sealed by Colin A. Moran, Registration Number PE 5344, on 08/15/16 and the original document is stored at the North Dakota Department of Transportation

QUANTITIES

SEE DWG 20-103.403-10

BNSF RAILWAY
1 MILE NORTH OF US 2

BNSF Ry. Br.0033-0085.600
SHOOFLY BRIDGE

ABUTMENT DETAILS

STATE	PROJECT NUMBER	SECTION NO.	SHEET NO.
ND	NHU-3-020(074)103	170	8

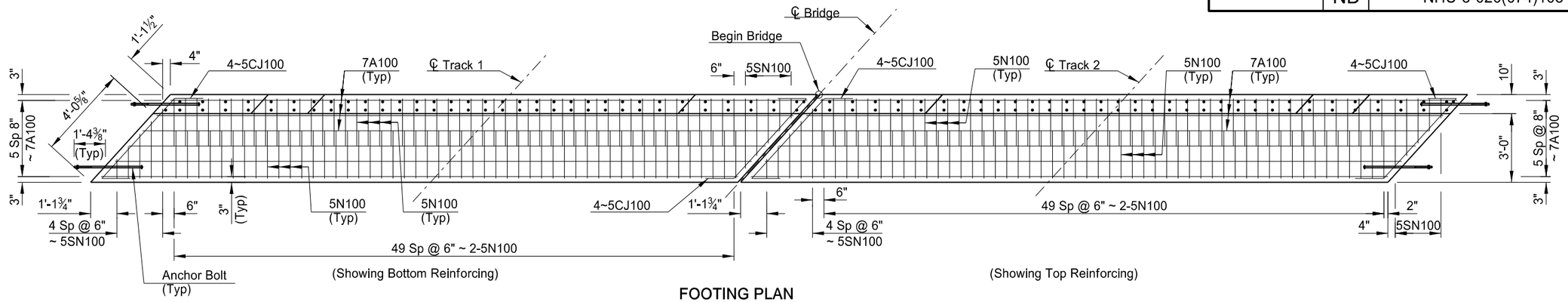

FOOTING PLAN
(Abutment 1 Shown)

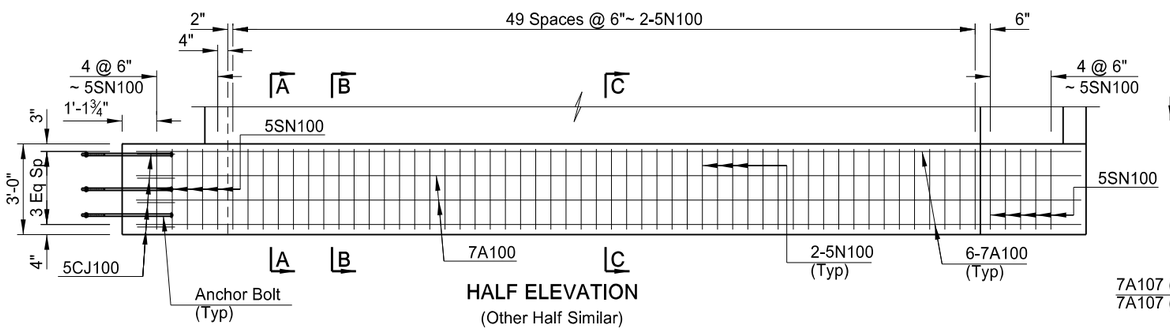

HALF ELEVATION
(Other Half Similar)

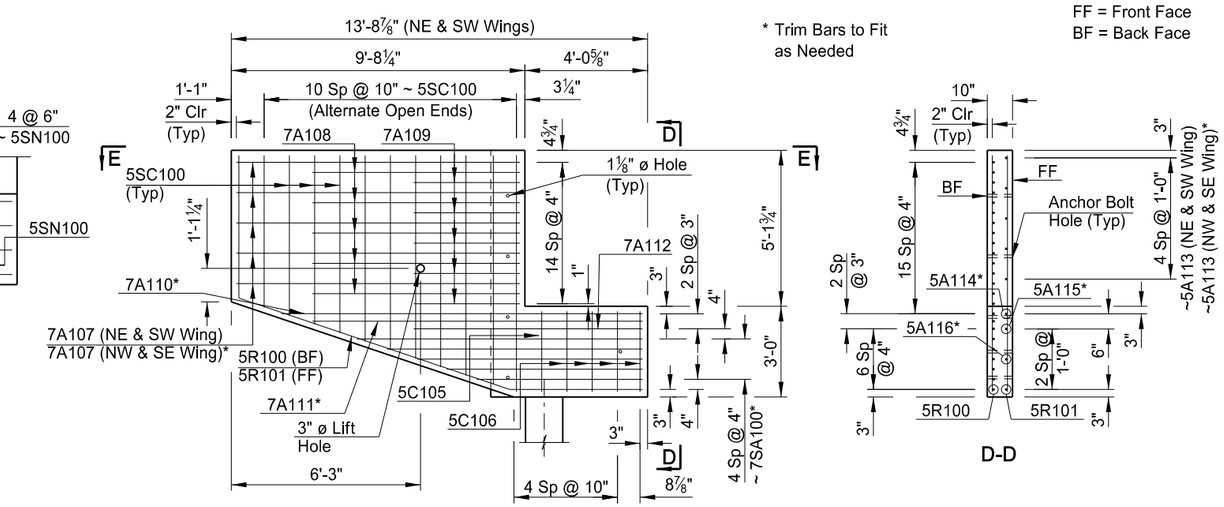

WING ELEVATION
(BF Shown, Along Skew)

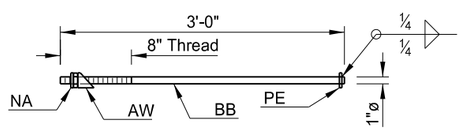

ANCHOR BOLT

1-Bar 1" ø x 3'-0" ~ BB
1-Bar 4" x ¾" x 0'-4" w/1 1/16" ø Hole at Center ~ PE
1-Std Hex Nut ~ NA
1-Angled Washer ~ AW
Galvanize After Fabrication

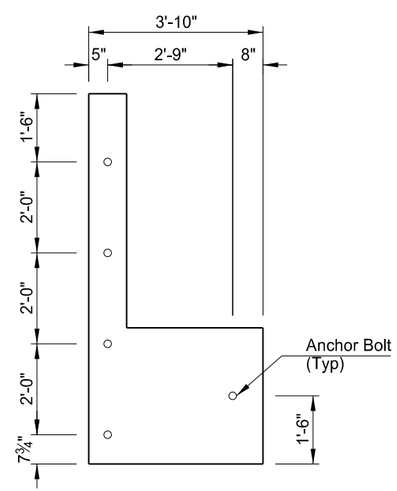

ANCHOR BOLT LOCATION

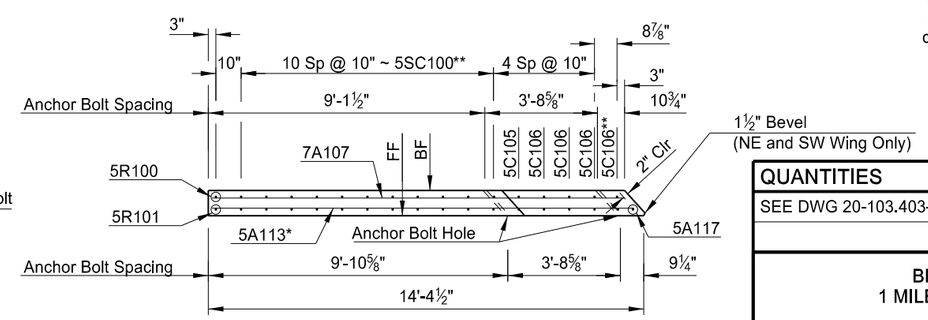

E-E

** Rotate Bar as Needed to Clear Anchor Bolt Hole

NOTES:

1. See Dwg. 20-103.403-9 for Cross Sections A-A, B-B & C-C.
2. Include the cost to furnish, cast and grout the anchor bolts in the pay item "Precast Abutment".
3. BOLTING WINGWALLS TO END BENTS: Spread mortar, consisting of equal parts by volume of AASHTO M 235, Type IV, Grade 3 epoxy and dry silica sand, mixed in accordance with manufacturer's directions, on ends of precast caps to a thickness of approximately ⅛" and thenm place and hold the wingwalls in the proper location. Fill void around bolts with grout as specified below. Add washer and hex nut to bolts. Tighten nuts and burr threads.
4. The grout will consist of one part Type III Portland Cement to three parts of fine aggregate, by weight, mixed with a gaging solution made of one part accelerating admixture to five parts of water by volume. The following mix proportions will yield one cubic foot of grout: cement - 35 lbs, fine aggreagate - 105 lbs, water - 1.25 gallons and accelerating admixture - 1 qt at a temperature above 50° F, the initial set of the grout will take place in three hours and design strength will be obtained in 24 hours.

This document was originally issued and sealed by Colin A. Moran, Registration Number PE 5344, on 08/15/16 and the original document is stored at the North Dakota Department of Transportation

QUANTITIES

SEE DWG 20-103.403-10

BNSF RAILWAY
1 MILE NORTH OF US 2

BNSF Ry. Br.0033-0085.600
SHOOFLY BRIDGE

ABUTMENT DETAILS
(Showing Reinforcing)

STATE	PROJECT NUMBER	SECTION NO.	SHEET NO.
ND	NHU-3-020(074)103	170	9

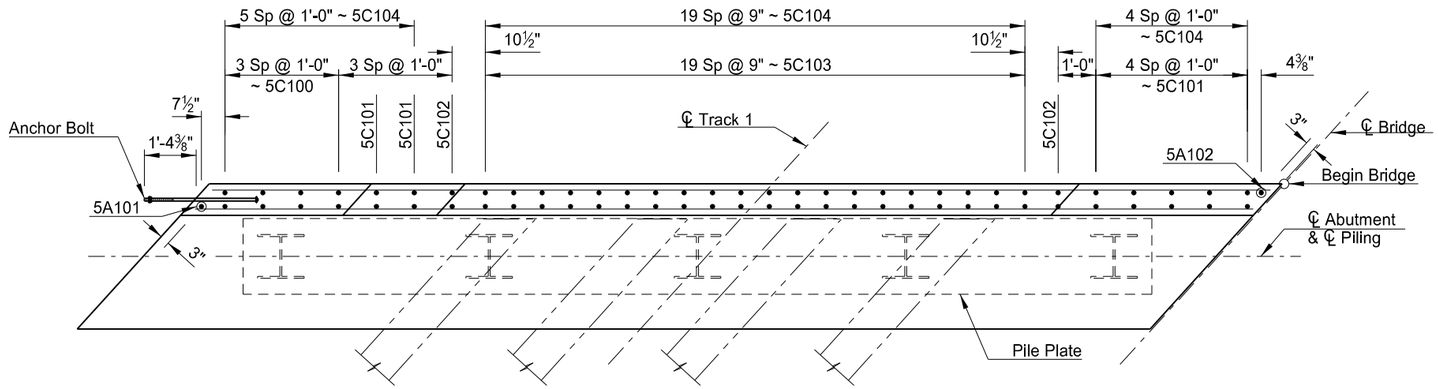

STEM PLAN
(Abutment 1 Shown)

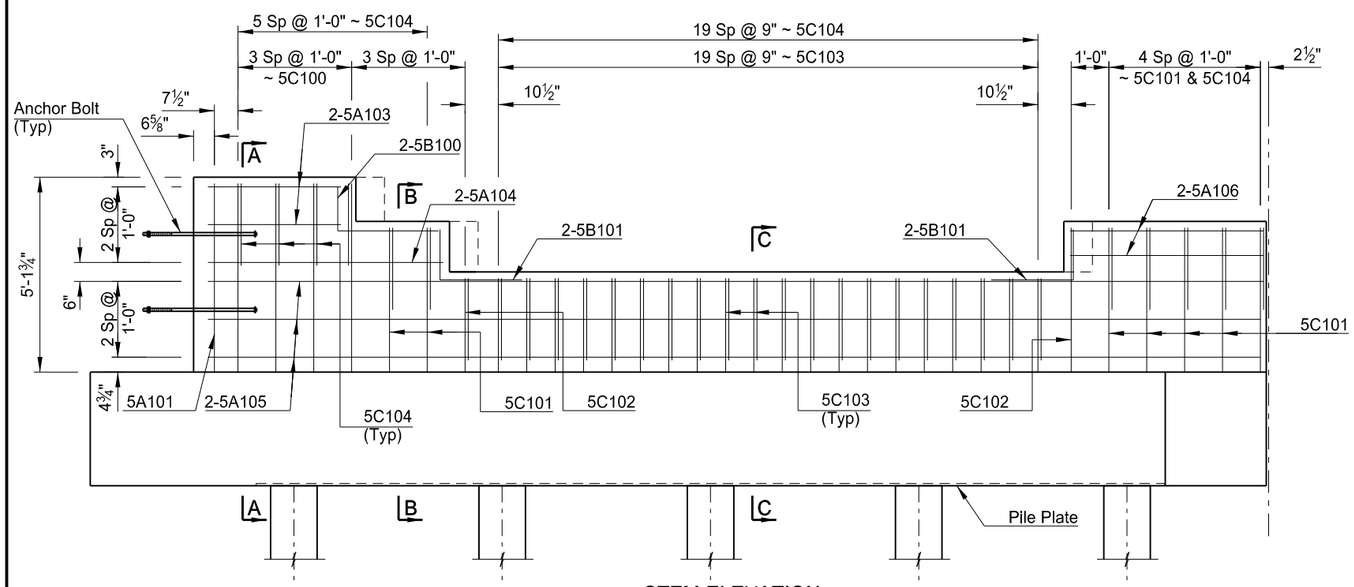

STEM ELEVATION

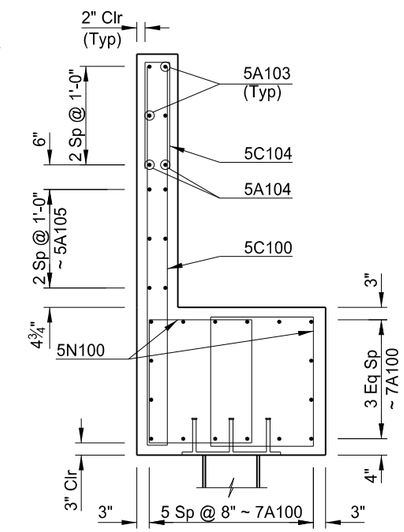

A-A

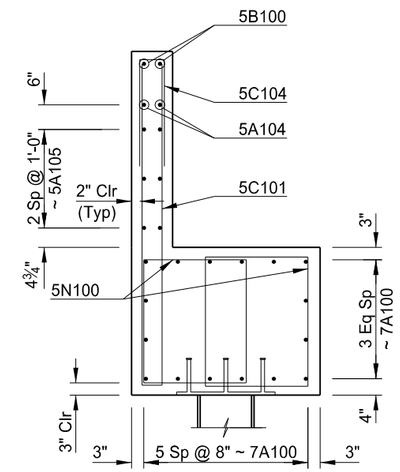

B-B

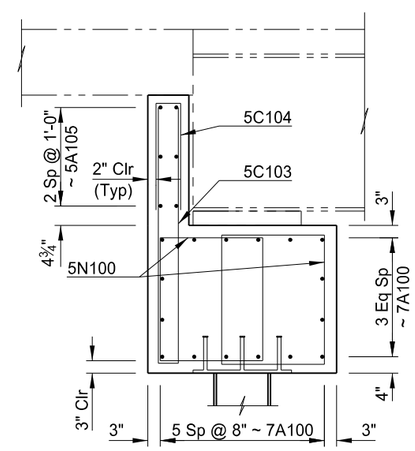

C-C

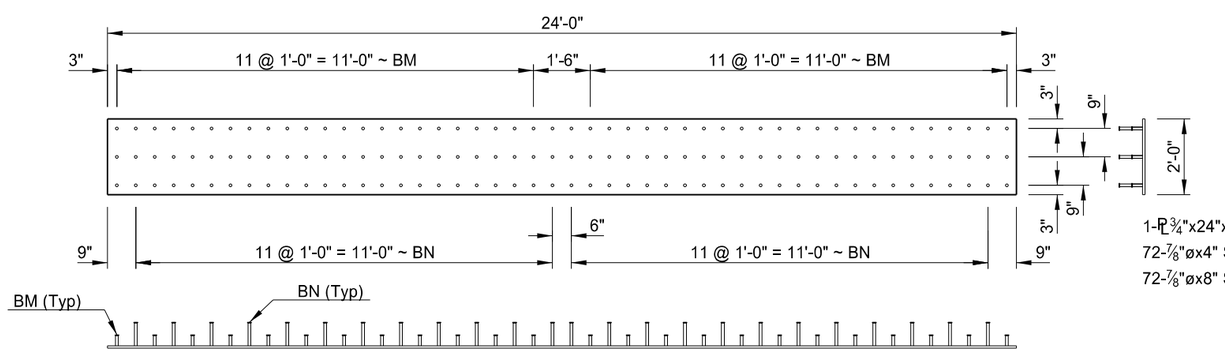

PILE PLATE

1-PL¾"x24"x24'-0" ~ Plate
72-⅞"øx4" Shear Studs ~ BM
72-⅞"øx8" Shear Studs ~ BN

NOTE:

1. See Dwg. 20-103.403-8 for Anchor Bolt Detail.

This document was originally issued and sealed by Colin A. Moran, Registration Number PE 5344, on 08/15/16 and the original document is stored at the North Dakota Department of Transportation

QUANTITIES

SEE DWG 20-103.403-10

BNSF RAILWAY
1 MILE NORTH OF US 2

BNSF Ry. Br.0033-0085.600
SHOOFLY BRIDGE

ABUTMENT DETAILS
(Showing Reinforcing)

STATE	PROJECT NUMBER	SECTION NO.	SHEET NO.
ND	NHU-3-020(074)103	170	10

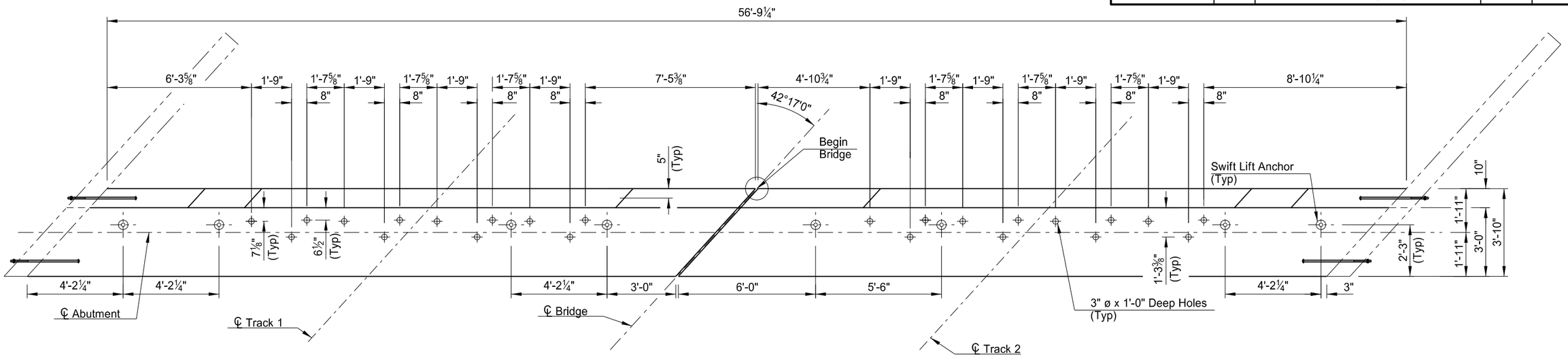

BEARING ANCHOR PLAN

(Abutment 1 Shown)

** Add 180° Hook Meeting AREMA Standards

SKEW ANGLE = 42°17'0"

BAR LIST - ONE ABUTMENT SECTION

SIZE	MARK	NO.	LENGTH
7	A100	16	27'-11"
5	A101	1	7'-9"
5	A102	1	6'-7"
5	A103	4	3'-10"
5	A104	2	6'-3"
5	A105	6	27'-11"
5	A106	4	4'-11"
5	B100	2	3'-4"
5	B101	4	3'-6"
5	C100	4	16'-0"
5	C101	7	13'-8"
5	C102	2	12'-4"
5	C103	20	11'-0"
5	C104	31	4'-10"
5	CJ100	8	9'-0"
5	N100	100	10'-4"
5	SN100	2	49'-7"

ESTIMATED MATERIAL QUANTITIES

REINFORCING STEEL (LBS)	CONCRETE (CY)
2,981	15.1

SKEW ANGLE = 42°17'0"

BAR LIST - ONE WING WALL

SIZE	MARK	NO.	LENGTH
7	A107**	5	9'-10"
7	A108**	5	6'-10"
7	A109**	5	3'-6"
7	A110	1	11'-8"
7	A111	1	11'-1"
7	A112	1	7'-7"
5	A113	5	9'-9"
5	A114	1	12'-2"
5	A115	1	10'-8"
5	A116	1	7'-8"
5	A117	1	2'-8"
5	C105	1	11'-0"
5	C106	4	5'-10"
5	R100	1	18'-5"
5	R101	1	18'-10"
7	SA100	1	36'-10"
5	SC100	1	146'-8"

ESTIMATED MATERIAL QUANTITIES

REINFORCING STEEL (LBS)	CONCRETE (CY)
656	2.5

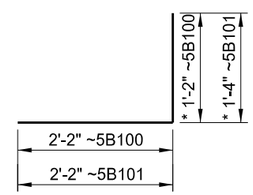

5B100 & 5B101

* b = Vertical Leg for B100 and B101

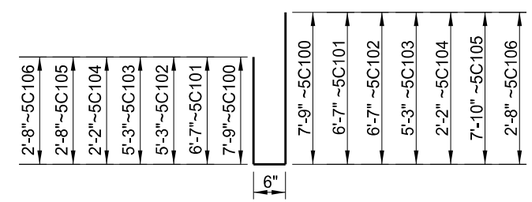

5C100, 5C101, 5C102, 5C103, 5C104, 5C105 & 5C106

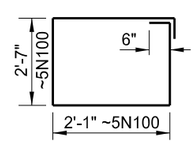

5N100

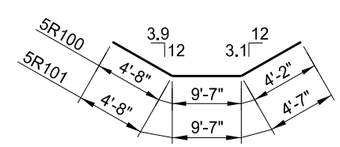

5R100 & 5R101

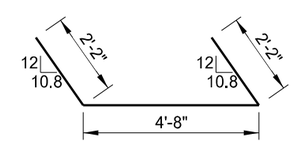

5CJ100

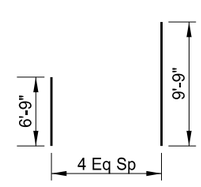

7SA100

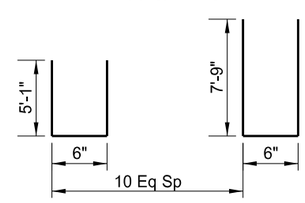

5SC100

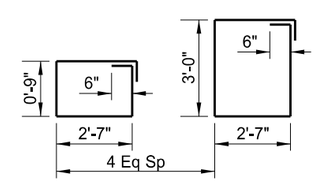

5SN100

NOTES:

1. After precast members are set, fill recess at lift anchors and at lift hole with cement grout to top of surrounding concrete.
2. See Dwg. 20-103.403-8 for Anchor Bolt Detail.
3. See Dwg. 20-103.403-11 for Lifting Detail.

This document was originally issued and sealed by Colin A. Moran, Registration Number PE 5344, on 08/15/16 and the original document is stored at the North Dakota Department of Transportation

QUANTITIES

PRECAST ABUTMENT	4
PRECAST CONCRETE WING WALL	4

BNSF RAILWAY
1 MILE NORTH OF US 2

BNSF Ry. Br.0033-0085.600
SHOOFLY BRIDGE

ABUTMENT DETAILS

STATE	PROJECT NUMBER	SECTION NO.	SHEET NO.
ND	NHU-3-020(074)103	170	11

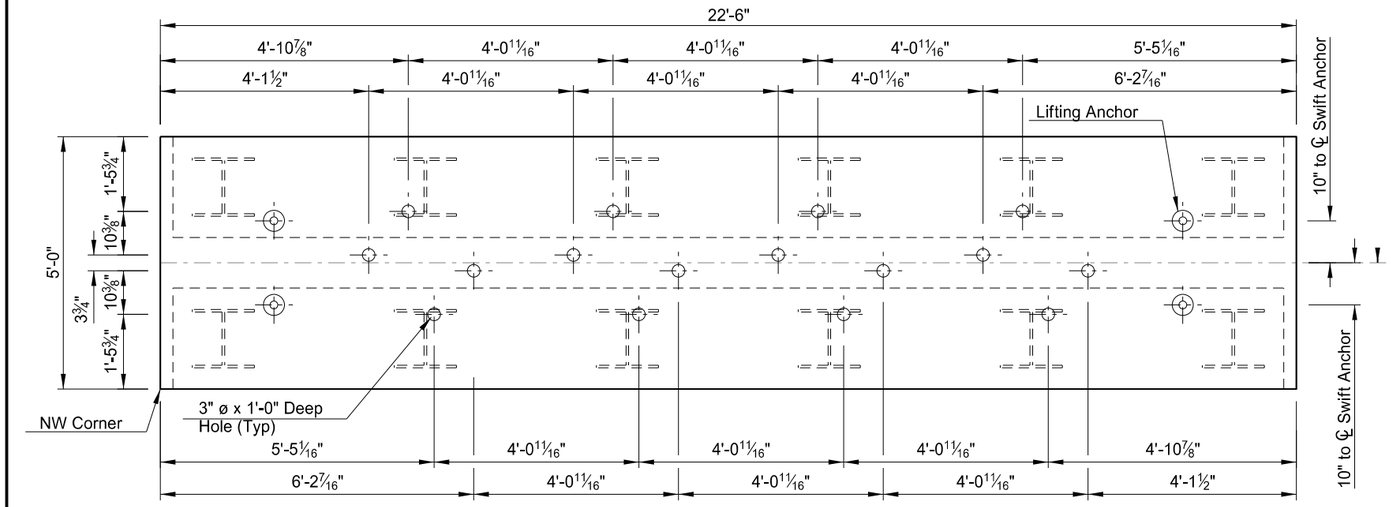

PLAN

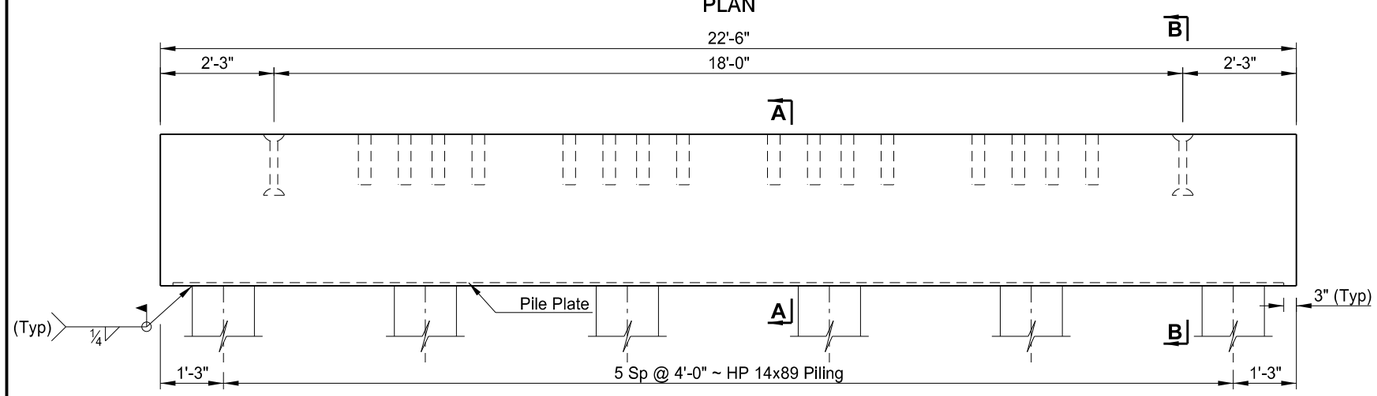

ELEVATION

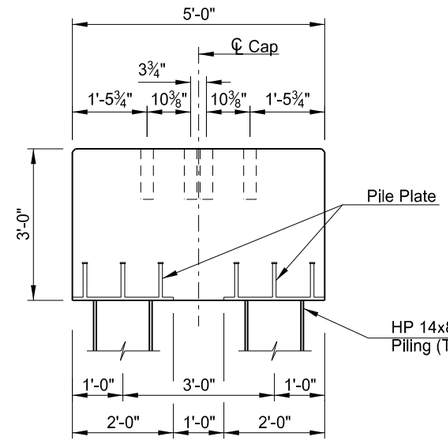

A-A
(Showing Anchor Bolt Holes)

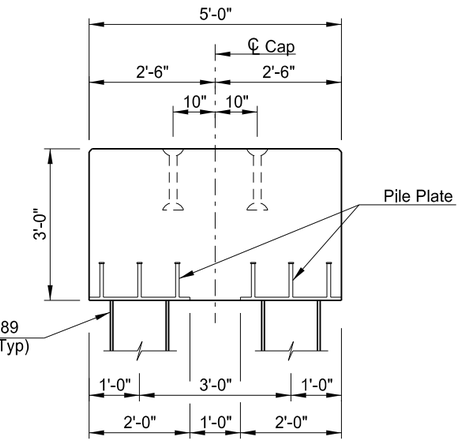

B-B
(Showing Swift Lift Anchors)

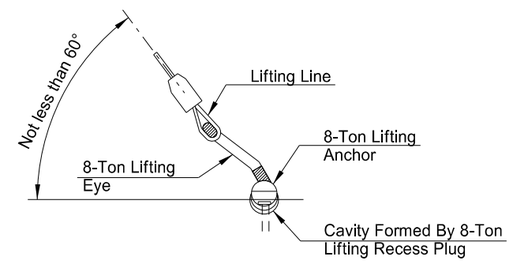

LIFTING DETAIL

After precast members are set, fill recess at lift anchors with cement grout to top of surrounding concrete.

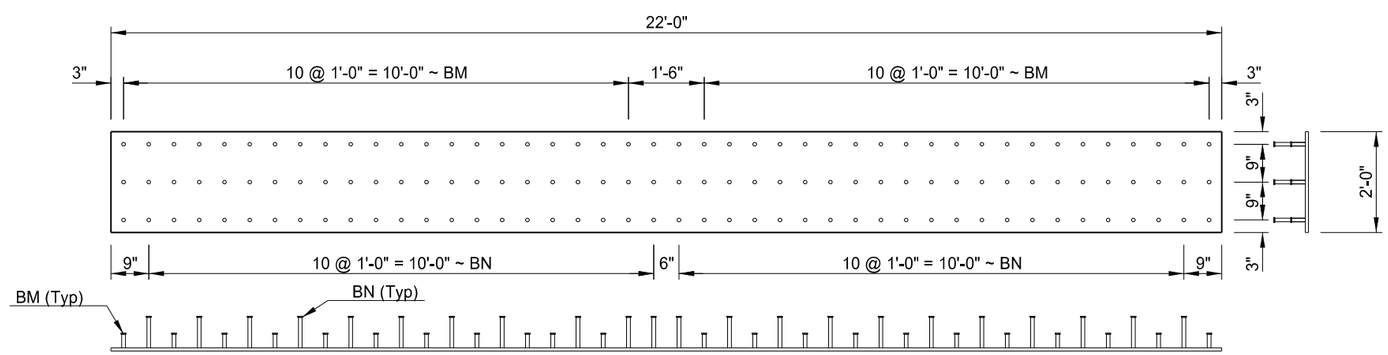

PILE PLATE

1-PL ¾"x24"x22'-0" ~ Plate
66-⅞"øx4" Shear Studs ~ BM
66-⅞"øx8" Shear Studs ~ BN

This document was originally issued and sealed by Colin A. Moran, Registration Number PE 5344, on 08/15/16 and the original document is stored at the North Dakota Department of Transportation

QUANTITIES

SEE DWG 20-103.403-13

BNSF RAILWAY
1 MILE NORTH OF US 2

BNSF Ry. Br.0033-0085.600
SHOOFLY BRIDGE

PRECAST CONCRETE PIER CAP DETAILS
(PIERS 2 & 5)

STATE	PROJECT NUMBER	SECTION NO.	SHEET NO.
ND	NHU-3-020(074)103	170	12

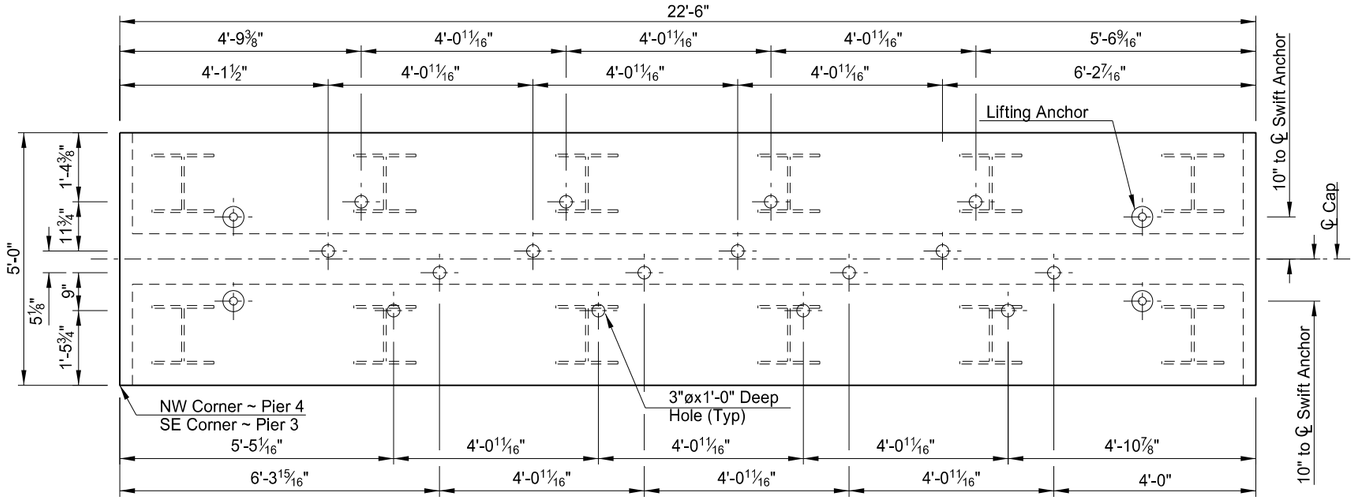

PLAN

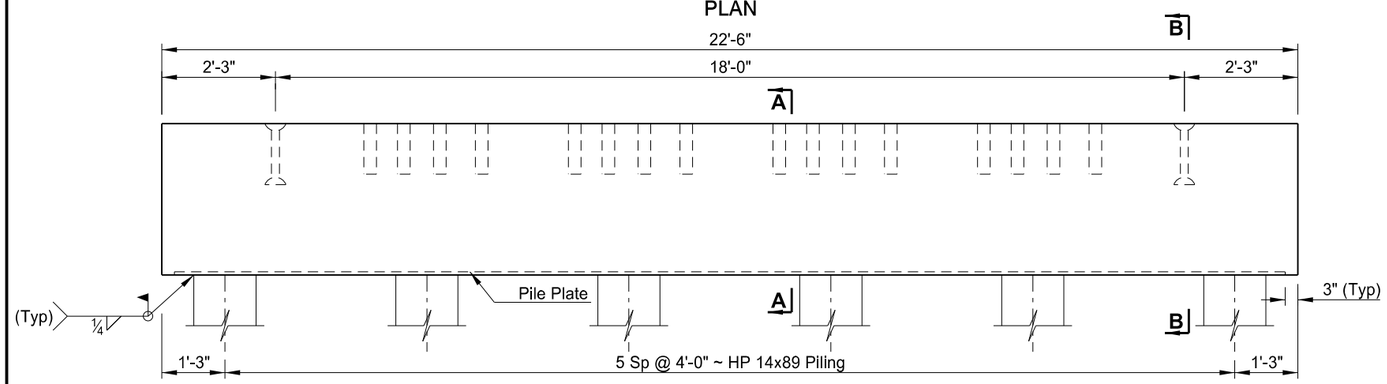

ELEVATION

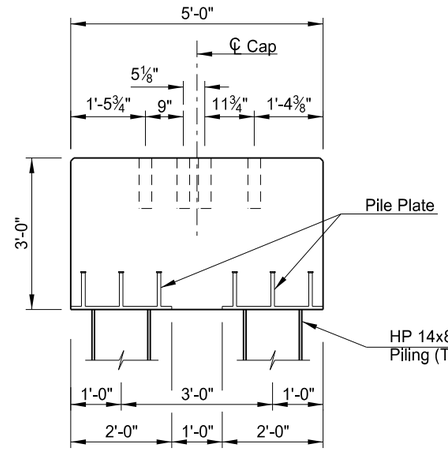

A-A
(Showing Anchor Bolt Holes)

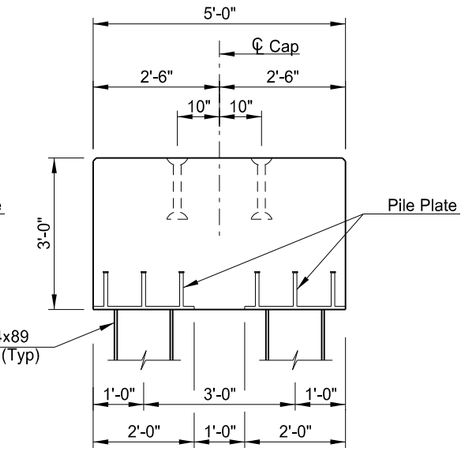

B-B
(Showing Swift Lift Anchors)

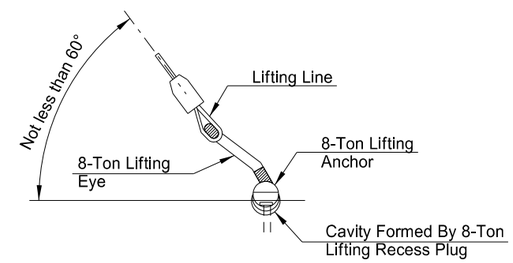

LIFTING DETAIL

After precast members are set, fill recess at lift anchors with cement grout to top of surrounding concrete.

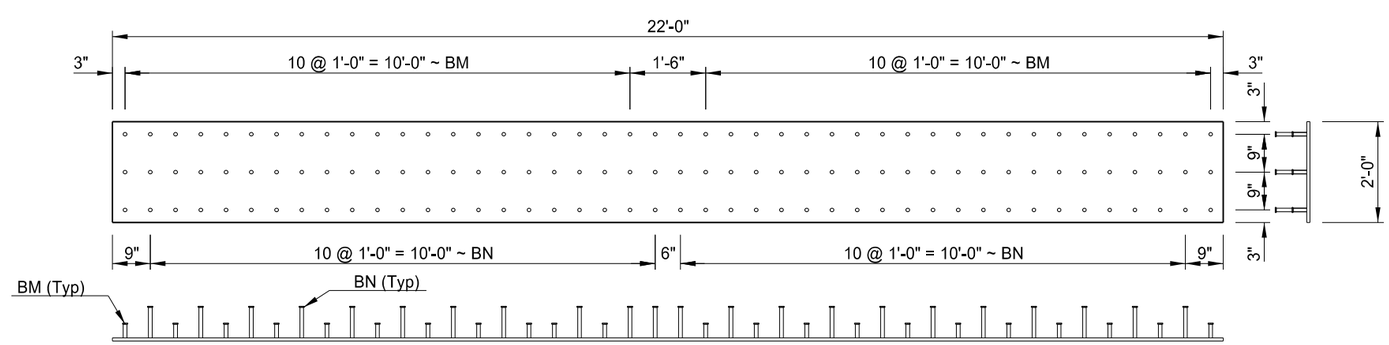

PILE PLATE

1-PL¾"x24"x22'-0" ~ Plate
66-⅞"øx4" Shear Studs ~ BM
66-⅞"øx8" Shear Studs ~ BN

This document was originally issued and sealed by Colin A. Moran, Registration Number PE 5344, on 08/15/16 and the original document is stored at the North Dakota Department of Transportation

QUANTITIES

SEE DWG 20-103.403-13

BNSF RAILWAY
1 MILE NORTH OF US 2

BNSF Ry. Br.0033-0085.600
SHOOFLY BRIDGE

PRECAST CONCRETE PIER CAP DETAILS
(PIERS 3 & 4)

STATE	PROJECT NUMBER	SECTION NO.	SHEET NO.
ND	NHU-3-020(074)103	170	13

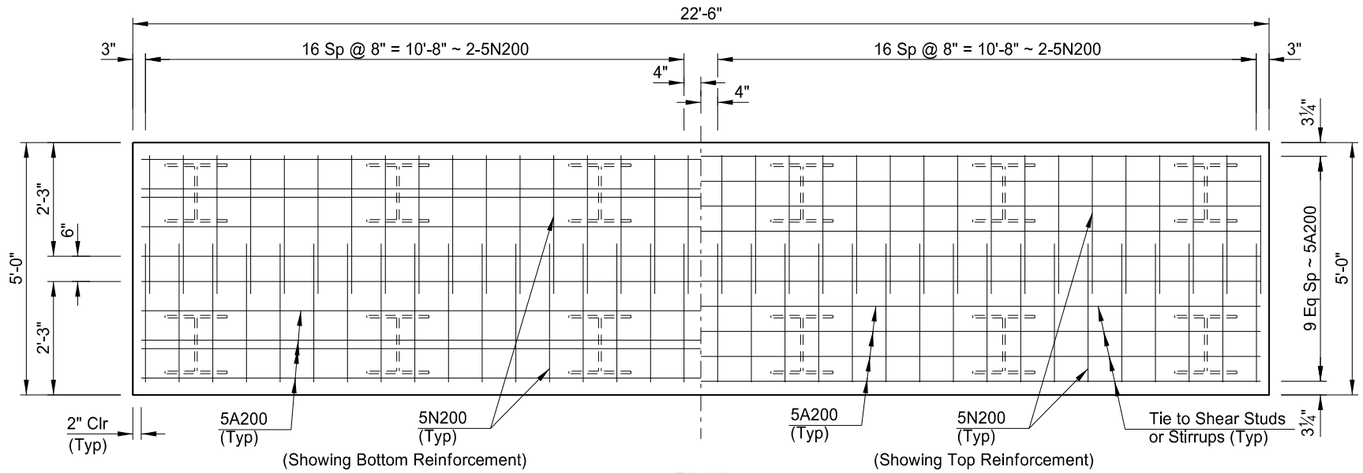

PLAN

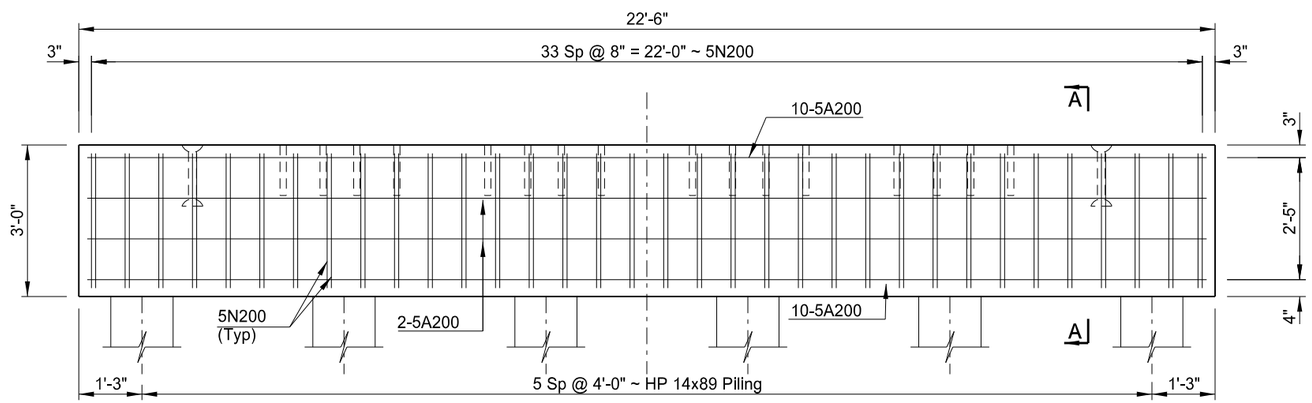

ELEVATION

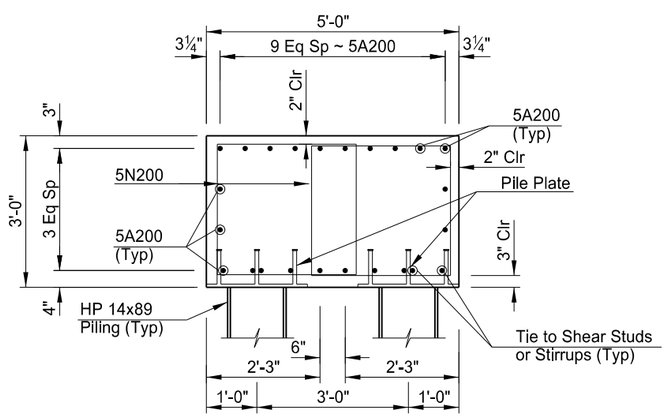

A-A

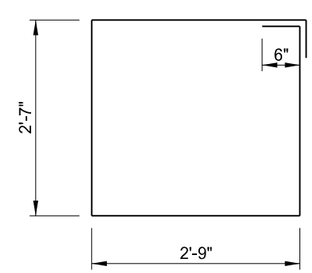

5N200

SKEW ANGLE = 42°17'0"

BAR LIST - ONE CAP

SIZE	MARK	NO.	LENGTH
5	A200	24	22'-2"
5	N200	68	11'-8"

ESTIMATED MATERIAL QUANTITIES

REINFORCING STEEL (LBS)	CONCRETE (CY)
1,383	12.5

This document was originally issued and sealed by Colin A. Moran, Registration Number PE 5344, on 08/15/16 and the original document is stored at the North Dakota Department of Transportation

QUANTITIES

PRECAST PIER CAP	8

BNSF RAILWAY
1 MILE NORTH OF US 2

BNSF Ry. Br.0033-0085.600
SHOOFLY BRIDGE

PRECAST CONCRETE PIER CAP DETAILS (SHOWING REINFORCING)

STATE	PROJECT NUMBER	SECTION NO.	SHEET NO.
ND	NHU-3-020(074)103	170	14

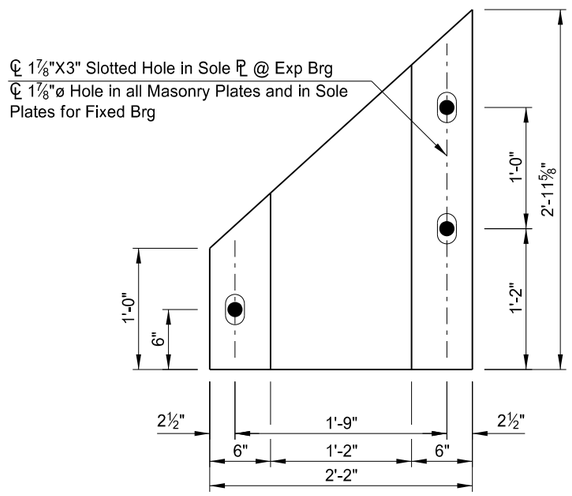

BEARING ASSEMBLY 'A'
PLAN

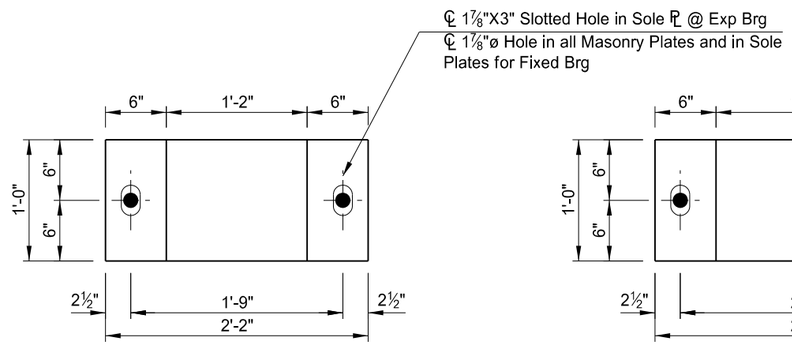

BEARING ASSEMBLY 'B-1' & 'B-2'
PLAN

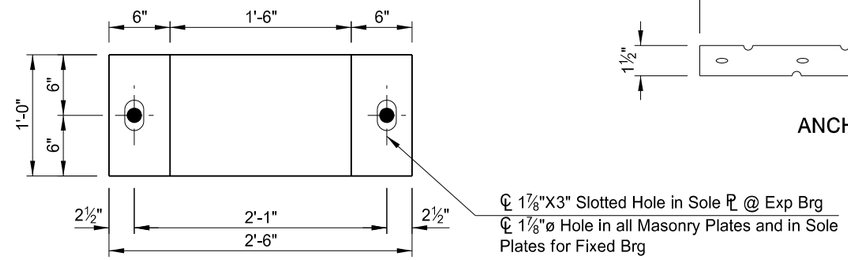

BEARING ASSEMBLY 'C'
PLAN

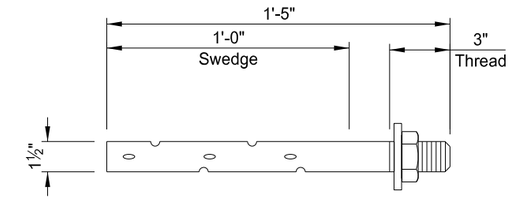

ANCHOR BOLT

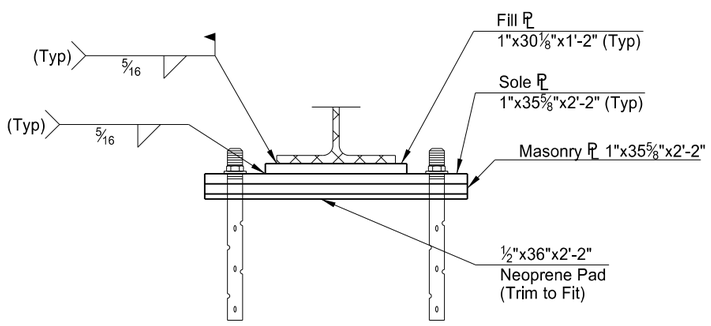

BEARING ASSEMBLY 'A'
ELEVATION

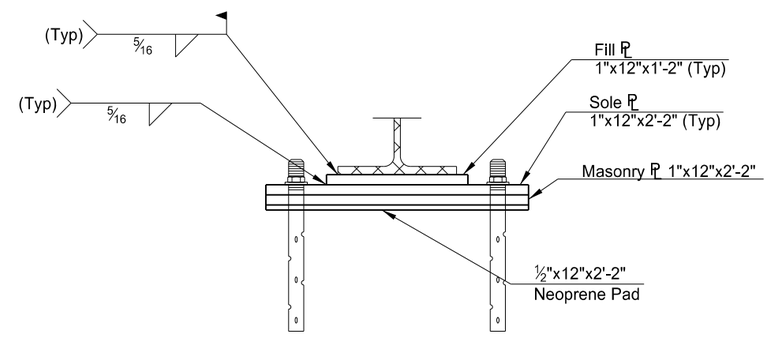

BEARING ASSEMBLY 'B-1'
ELEVATION

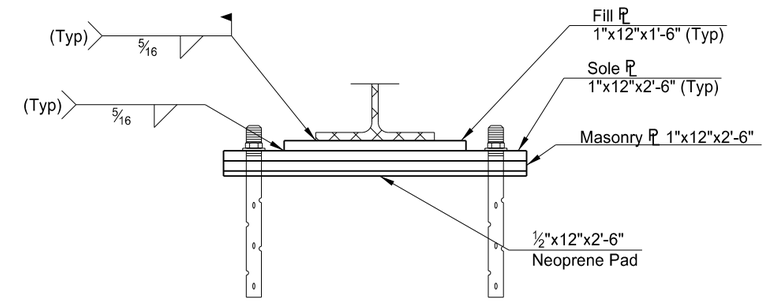

BEARING ASSEMBLY 'C'
ELEVATION

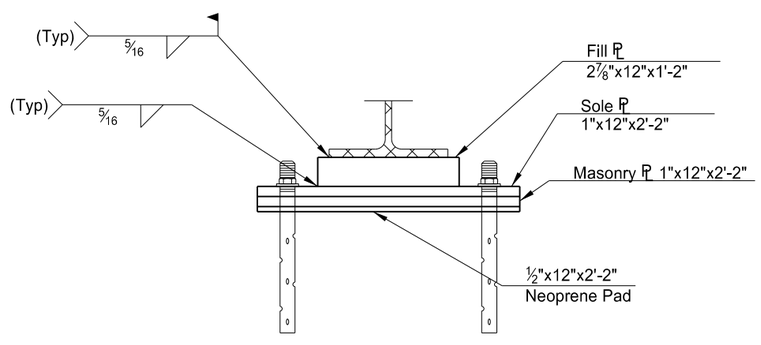

BEARING ASSEMBLY 'B-2'
ELEVATION

This document was originally issued and sealed by Colin A. Moran, Registration Number PE 5344, on 08/15/16 and the original document is stored at the North Dakota Department of Transportation

NOTE:
See Dwg 20-103.403-15 & 16 for Bearing Locations

BNSF RAILWAY
1 MILE NORTH OF US 2

BNSF Ry. Br.0033-0085.600
SHOOFLY BRIDGE

BEARING DETAILS

STATE	PROJECT NUMBER	SECTION NO.	SHEET NO.
ND	NHU-3-020(074)103	170	15

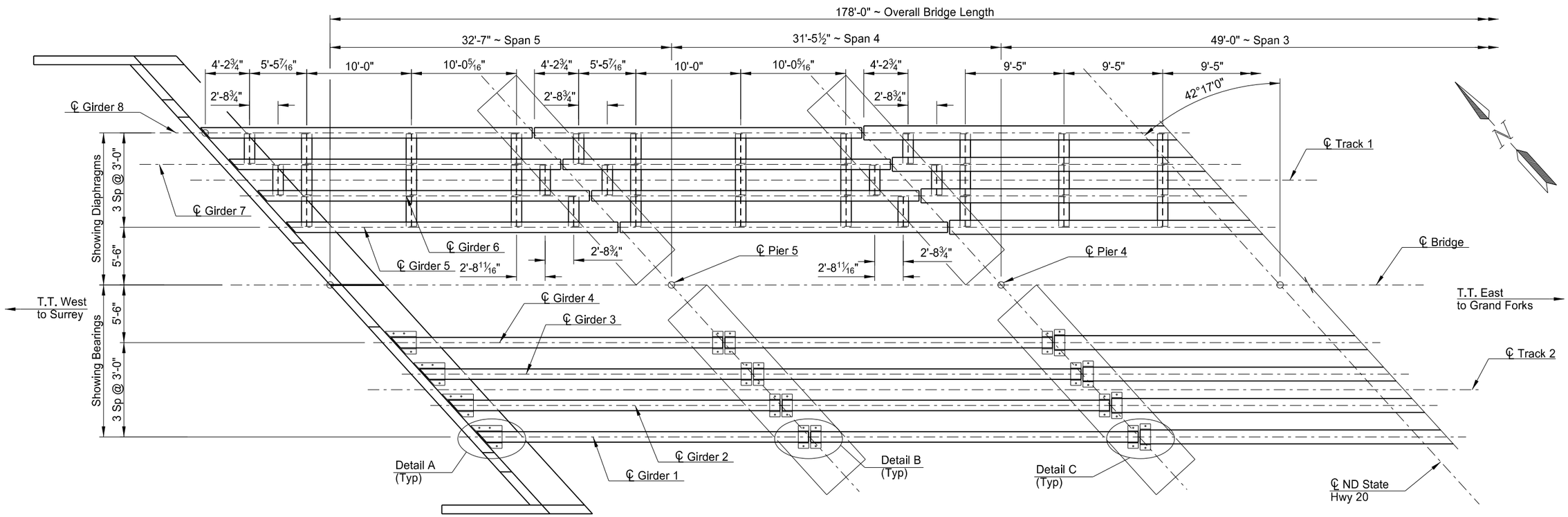

FRAMING PLAN

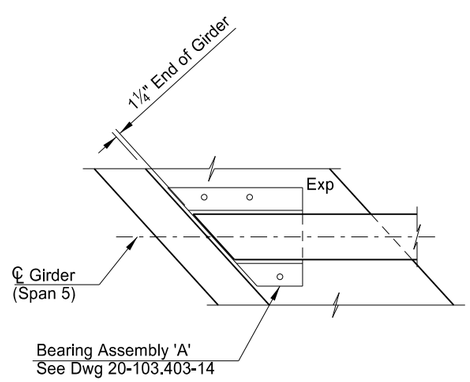

DETAIL A

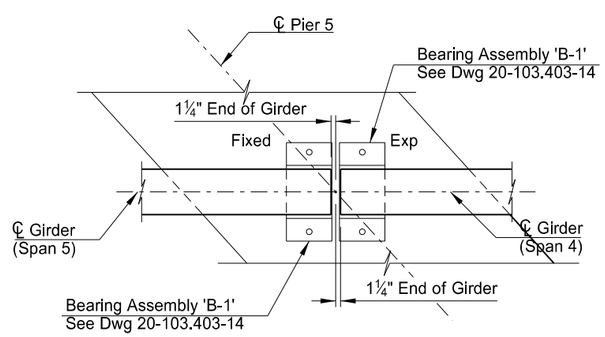

DETAIL B

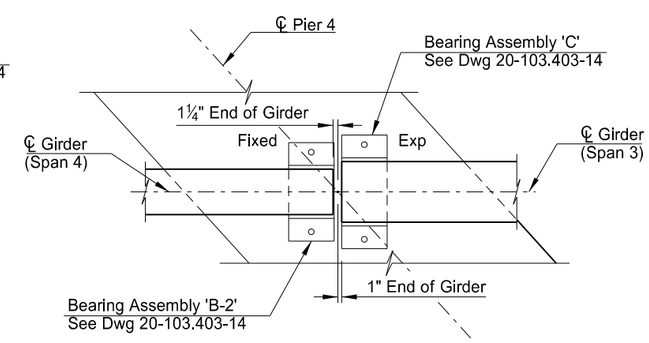

DETAIL C

This document was originally issued and sealed by Colin A. Moran, Registration Number PE 5344, on 08/15/16 and the original document is stored at the North Dakota Department of Transportation

NOTE:
Girders for Track 1 and Track 2 are similar.

BNSF RAILWAY
1 MILE NORTH OF US 2

BNSF Ry. Br.0033-0085.600
SHOOFLY BRIDGE

FRAMING PLAN

STATE	PROJECT NUMBER	SECTION NO.	SHEET NO.
ND	NHU-3-020(074)103	170	16

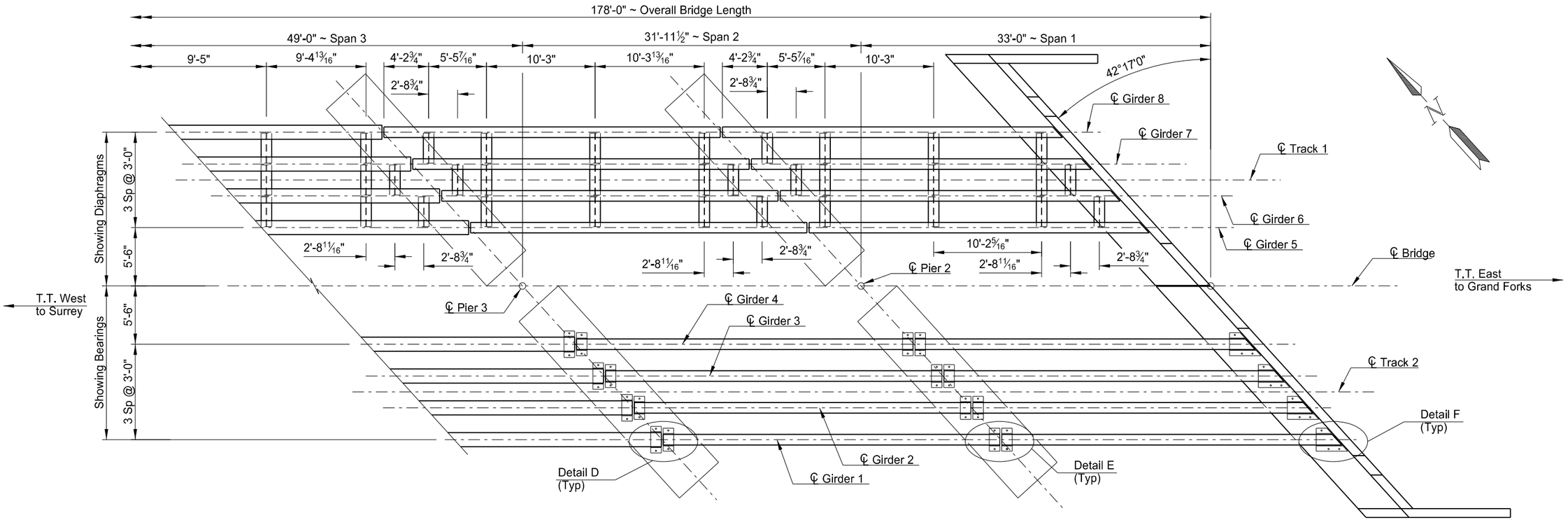

FRAMING PLAN

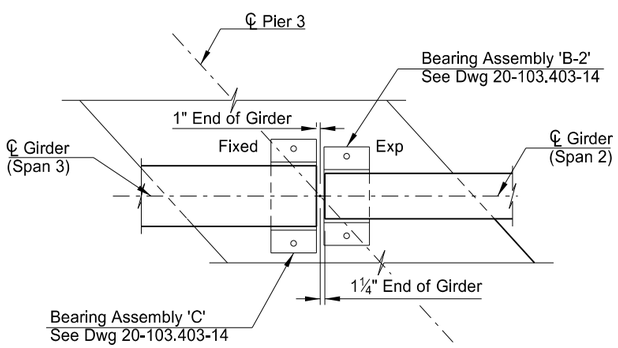

DETAIL D

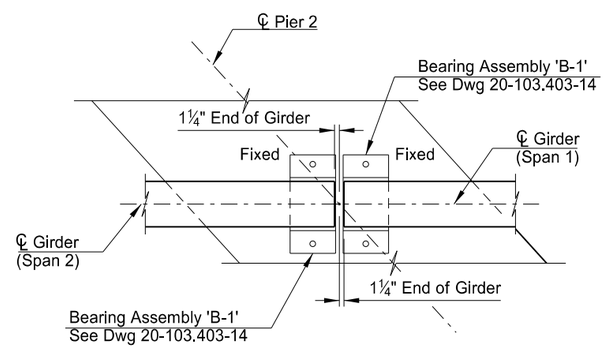

DETAIL E

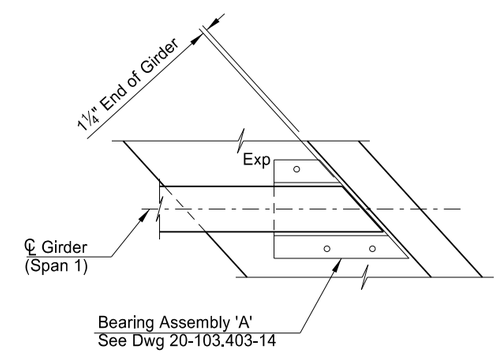

DETAIL F

This document was originally issued and sealed by Colin A. Moran, Registration Number PE 5344, on 08/15/16 and the original document is stored at the North Dakota Department of Transportation

NOTE:
Girders for Track 1 and Track 2 are similar.

BNSF RAILWAY
1 MILE NORTH OF US 2

BNSF Ry. Br.0033-0085.600
SHOOFLY BRIDGE

FRAMING PLAN

STATE	PROJECT NUMBER	SECTION NO.	SHEET NO.
ND	NHU-3-020(074)103	170	17

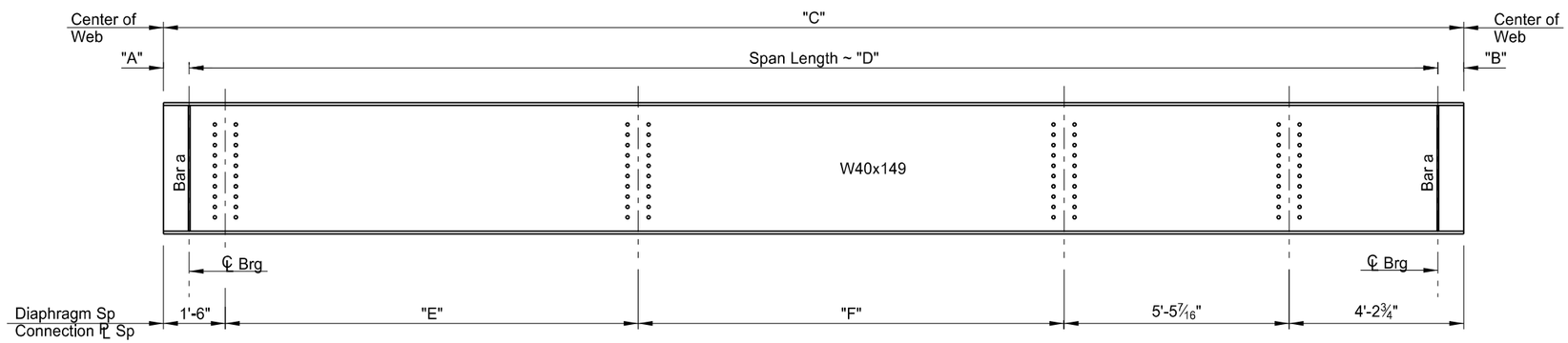

GIRDER 1 ELEVATION
(Spans 1, 2, 4 & 5)

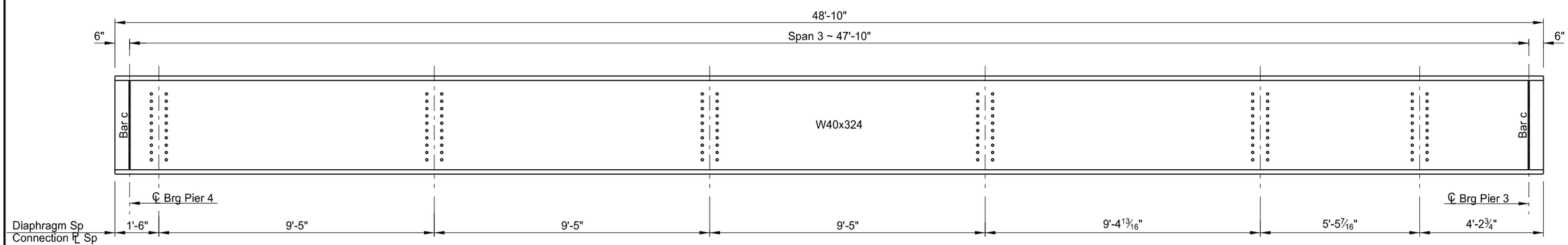

GIRDER 1 ELEVATION
(Span 3)

This document was originally issued and sealed by Colin A. Moran, Registration Number PE 5344, on 08/15/16 and the original document is stored at the North Dakota Department of Transportation

NOTES:

1. The girder elevation details shown represent girder No. 1 in an eight girder bridge. Other girders are similar. Fabricate other girders in accordance with Dwgs 20-103.403-15 and 20-103.403-16.
2. All dimensions shown are horizontal.
3. South face of girder shown.
4. See Dwg 20-103.403-18 for BAR a, BAR b and BAR c locations, connection plate and girder end details.
5. Place the natural camber in the up position.

SPAN	"A"	"B"	"C"	"D"	"E"	"F"
SPAN 1	5¾"	1'-0½"	31'-7½"	30'-1¼"	10'-3"	10'-2 5/16"
SPAN 2	5¾"	5¾"	31'-9"	30'-9½"	10'-3"	10'-3 13/16"
SPAN 3	5¾"	5¾"	31'-3"	30'-3½"	10'-0"	10'-0 13/16"
SPAN 4	1'-0½"	5¾"	31'-2½"	29'-8¼"	10'-0"	10'-0 5/16"

BNSF RAILWAY
1 MILE NORTH OF US 2

BNSF Ry. Br.0033-0085.600
SHOOFLY BRIDGE

GIRDER 1 ELEVATION

STATE	PROJECT NUMBER	SECTION NO.	SHEET NO.
ND	NHU-3-020(074)103	170	18

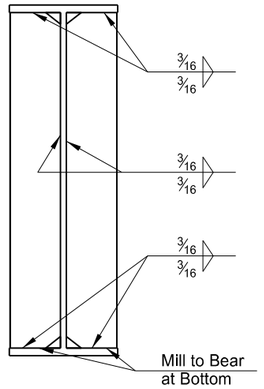

(Bar 5½" x ½")

BAR a DETAIL

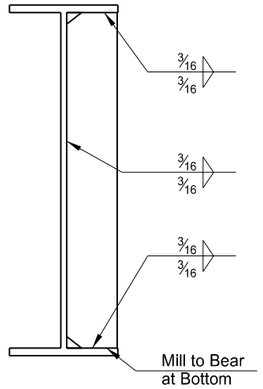

(Bar 5½" x ½")

BAR b DETAIL

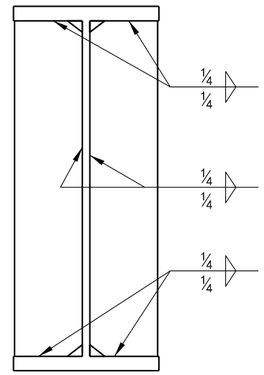

(Bar 7 7/16" x ⅝")

BAR c DETAIL

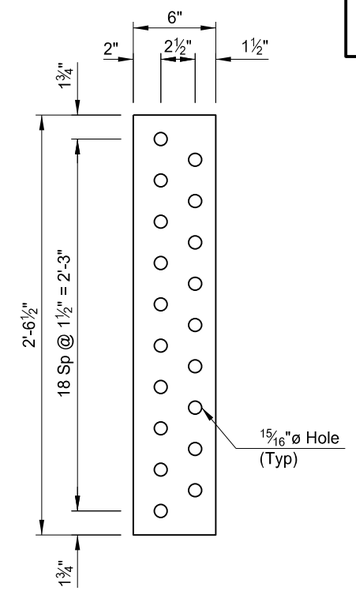

CONNECTION PLATE DETAIL

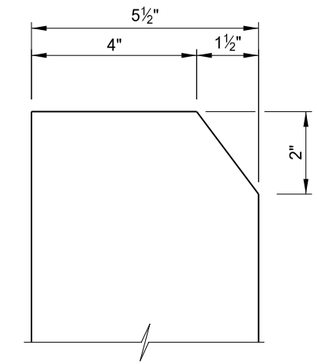

STIFFENER CLIP DETAIL
(Spans 1, 2, 4, & 5)

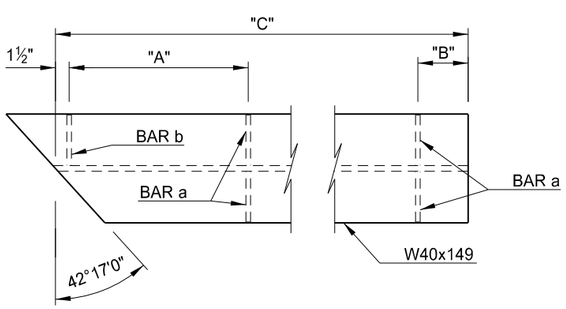

GIRDER END DETAIL
(Span 5)

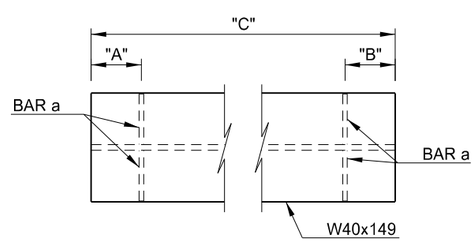

GIRDER END DETAIL
(Span 2 & 4)

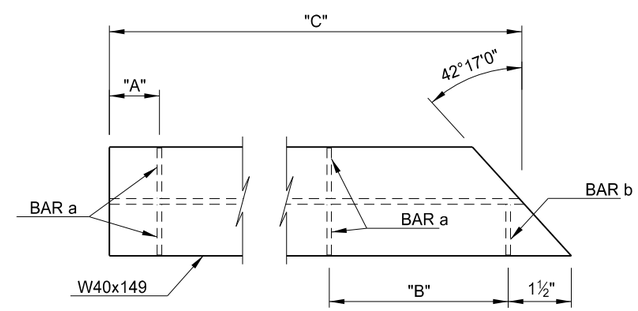

GIRDER END DETAIL
(Span 1)

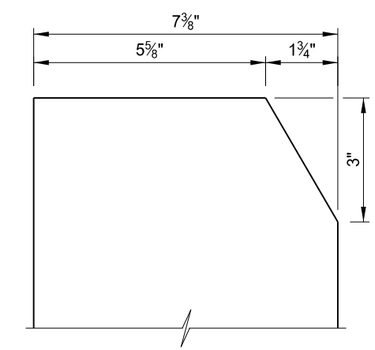

STIFFENER CLIP DETAIL
(Span 3)

NOTE:

See Dwg 20-103.403-17 for connection plate locations.

SPAN	"A"	"B"	"C"
SPAN 1	5¾"	1'-0½"	31'-7½"
SPAN 2	5¾"	5¾"	31'-9"
SPAN 4	5¾"	5¾"	31'-3"
SPAN 5	1'-0½"	5¾"	31'-2½"

This document was originally issued and sealed by Colin A. Moran, Registration Number PE 5344, on 08/26/16 and the original document is stored at the North Dakota Department of Transportation

BNSF RAILWAY
1 MILE NORTH OF US 2

BNSF Ry. Br.0033-0085.600
SHOOFLY BRIDGE

GIRDER DETAILS

STATE	PROJECT NUMBER	SECTION NO.	SHEET NO.
ND	NHU-3-020(074)103	170	19

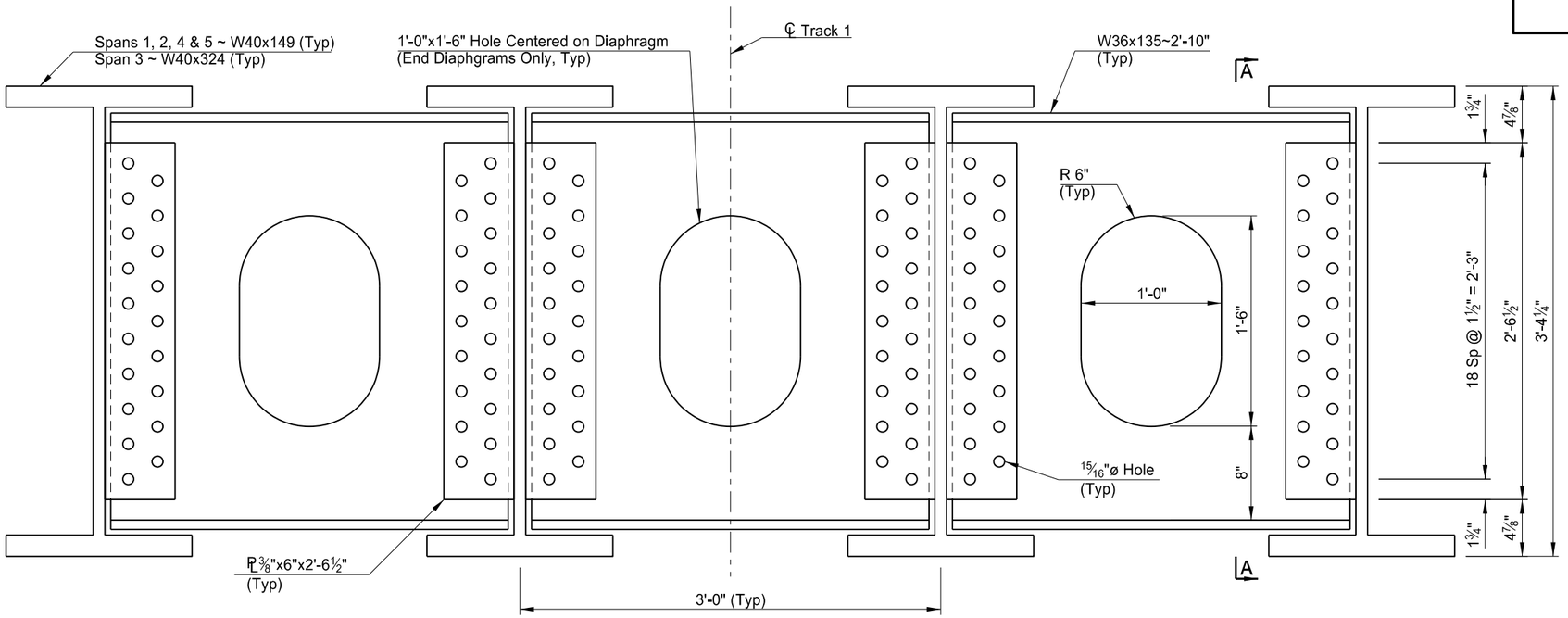

TYPICAL DIAPHRAGM ELEVATION

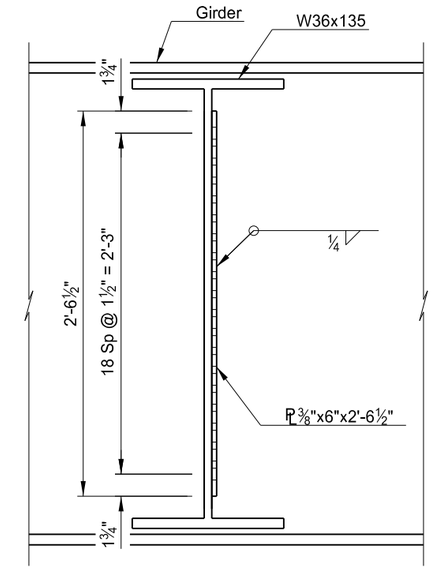

A-A

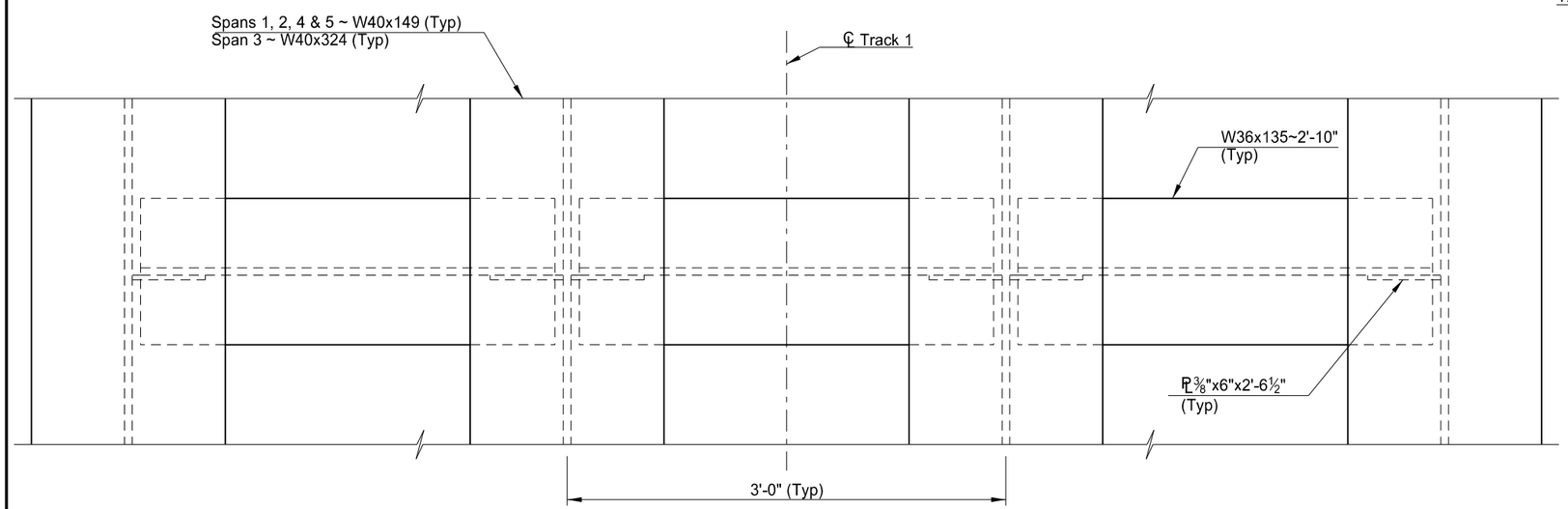

PLAN

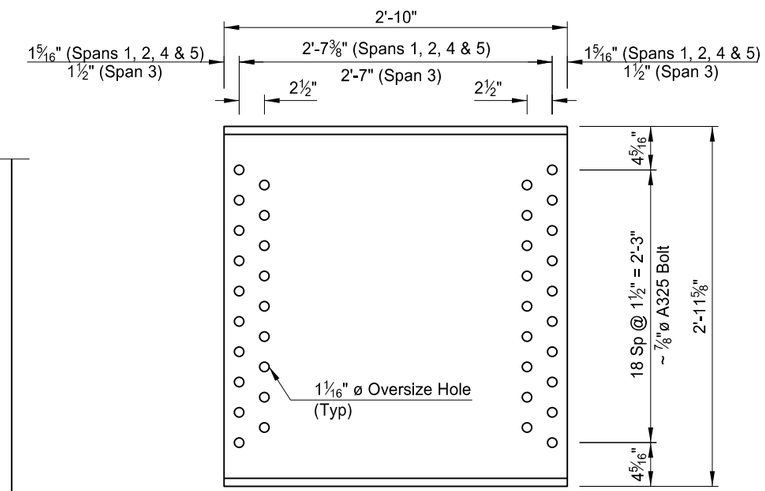

DIAPHRAGM DETAIL

This document was originally issued and sealed by Colin A. Moran, Registration Number PE 5344, on 08/26/16 and the original document is stored at the North Dakota Department of Transportation

BNSF RAILWAY
1 MILE NORTH OF US 2

BNSF Ry. Br.0033-0085.600
SHOOFLY BRIDGE

DIAPHRAGM DETAILS

NOTES:

1. Track 1 is shown. Track 2 is similar.
2. See Dwg 20-103.403-15 and Dwg 20-103.403-16 for diaphragm locations.

STATE	PROJECT NUMBER	SECTION NO.	SHEET NO.
ND	NHU-3-020(074)103	170	20

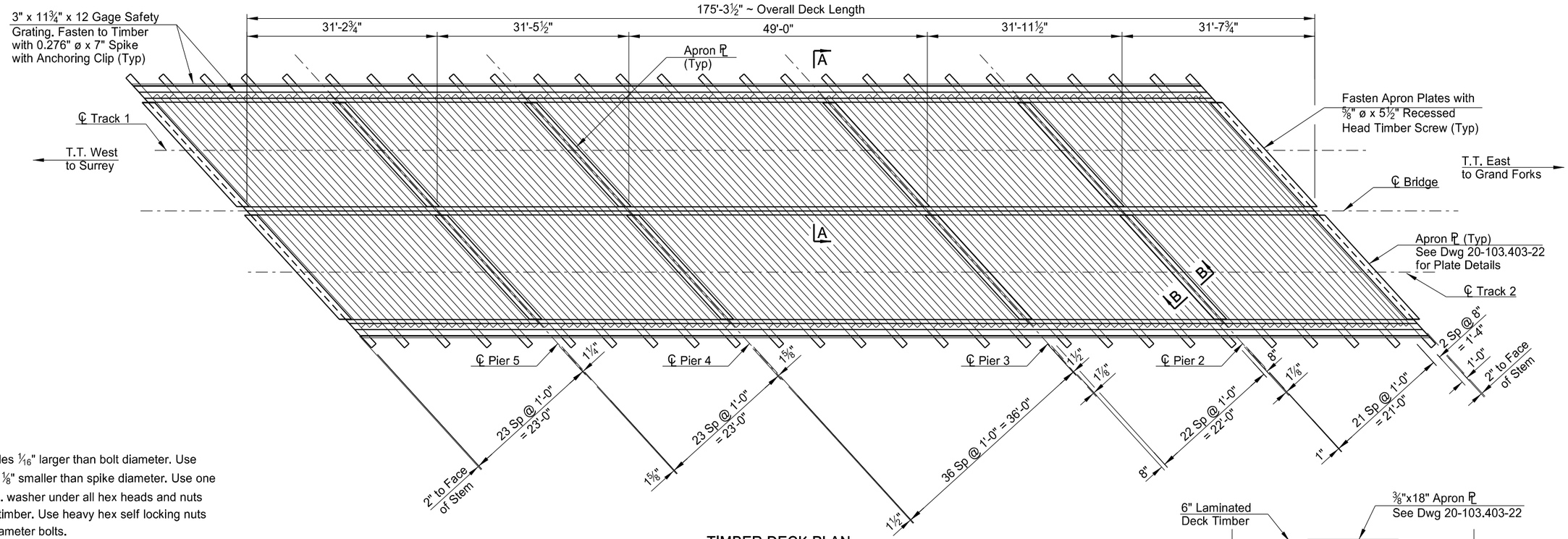

TIMBER DECK PLAN

NOTES:

1. Use bolt holes 1/16" larger than bolt diameter. Use spike holes ⅛" smaller than spike diameter. Use one 5/16" x 3" o.d. washer under all hex heads and nuts bearing on timber. Use heavy hex self locking nuts for all ¾" diameter bolts.

2. Include all costs to supply, fabricate and install safety grating and fasteners in the unit price bid for "Pedestrian Fence".

SPAN NO. 1	QUANTITY
12" x 6" x 30'-6"	10
12" x 6" x 26'-0"	34
8" x 6" x 25'-8"	4
SPAN NO. 2	**QUANTITY**
12" x 6" x 30'-6"	10
12" x 6" x 26'-0"	34
8" x 6" x 25'-8"	4
SPAN NO. 3	**QUANTITY**
12" x 6" x 30'-6"	14
12" x 6" x 26'-0"	58
SPAN NO. 4	**QUANTITY**
12" x 6" x 30'-6"	10
12" x 6" x 26'-0"	36
SPAN NO. 5	**QUANTITY**
12" x 6" x 30'-6"	10
12" x 6" x 26'-0"	36
ALL SPANS	**QUANTITY**
8" x 10" x 4'-6"	54
8" x 14" x 30'-0"	24
3" x 6" x 15'-0"	48
2" x 12" x 15'-0"	24

NS = Near Side
FS = Far Side

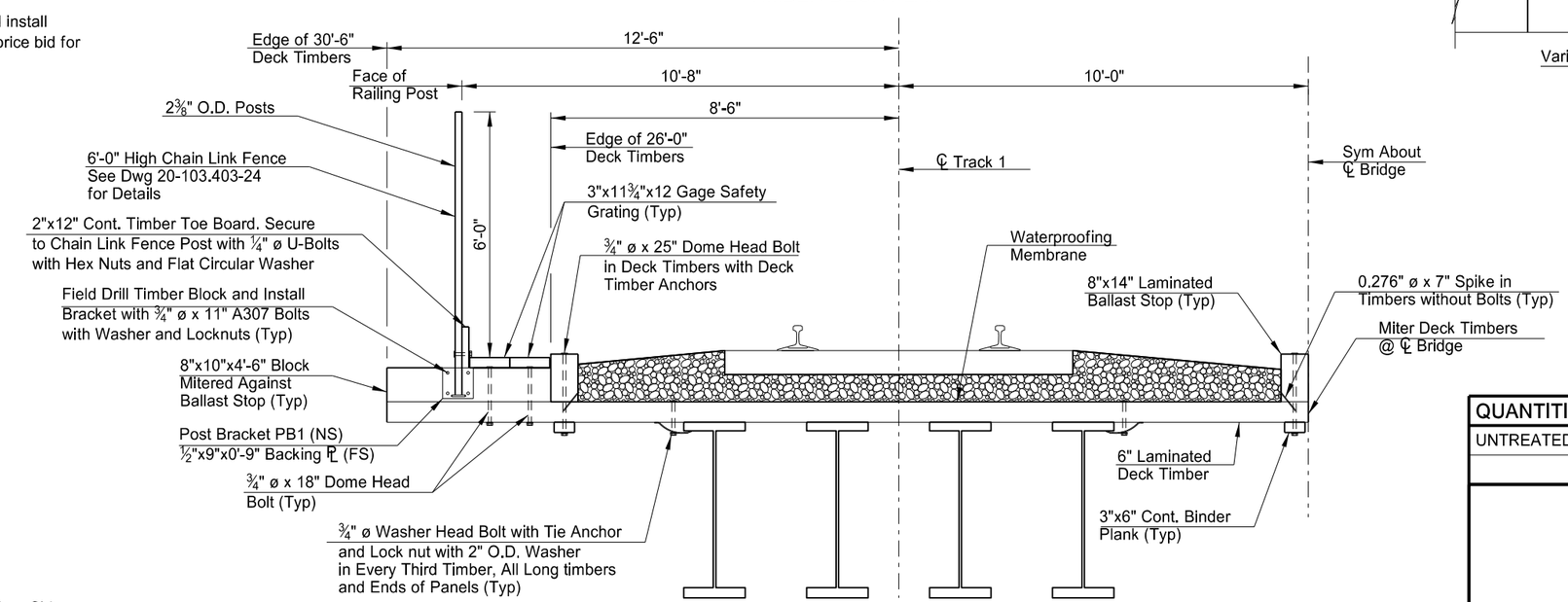

SECTION A-A

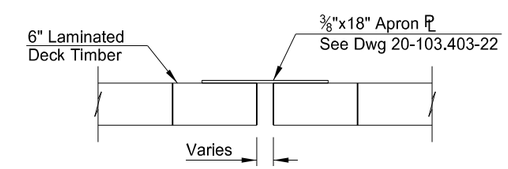

B-B

This document was originally issued and sealed by Colin A. Moran, Registration Number PE 5344, on 08/15/16 and the original document is stored at the North Dakota Department of Transportation

QUANTITIES	
UNTREATED TIMBER	51.7 MBM

BNSF RAILWAY
1 MILE NORTH OF US 2

BNSF Ry. Br.0033-0085.600
SHOOFLY BRIDGE

TIMBER BALLAST DECK ON STEEL SPAN

STATE	PROJECT NUMBER	SECTION NO.	SHEET NO.
ND	NHU-3-020(074)103	170	21

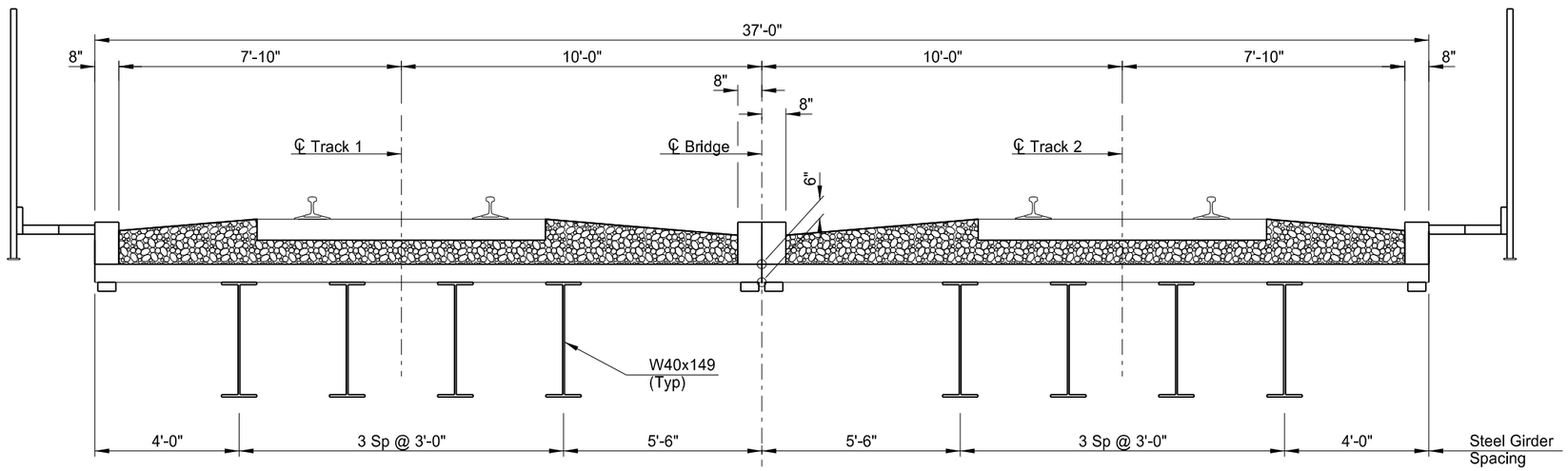

SPANS 1, 2, 4, & 5 TYPICAL SECTION
(Section between Walkway Supports)

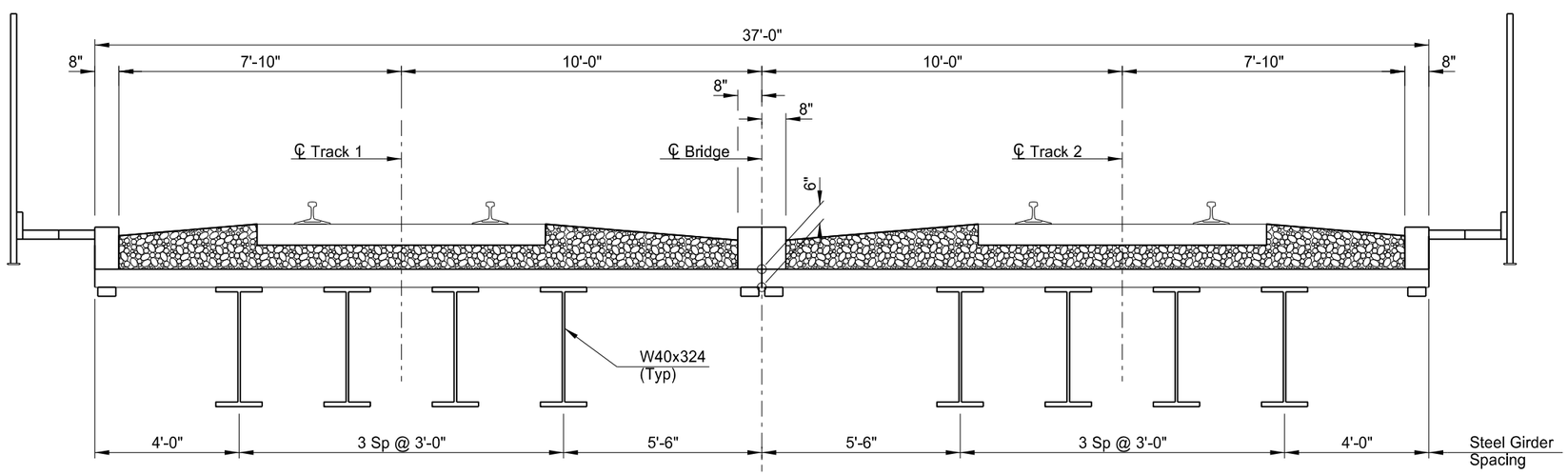

SPAN 3 TYPICAL SECTION
(Section between Walkway Supports)

This document was originally issued and sealed by Colin A. Moran, Registration Number PE 5344, on 08/15/16 and the original document is stored at the North Dakota Department of Transportation

BNSF RAILWAY
1 MILE NORTH OF US 2

BNSF Ry. Br.0033-0085.600
SHOOFLY BRIDGE

BALLAST DECK SECTION

STATE	PROJECT NUMBER	SECTION NO.	SHEET NO.
ND	NHU-3-020(074)103	170	22

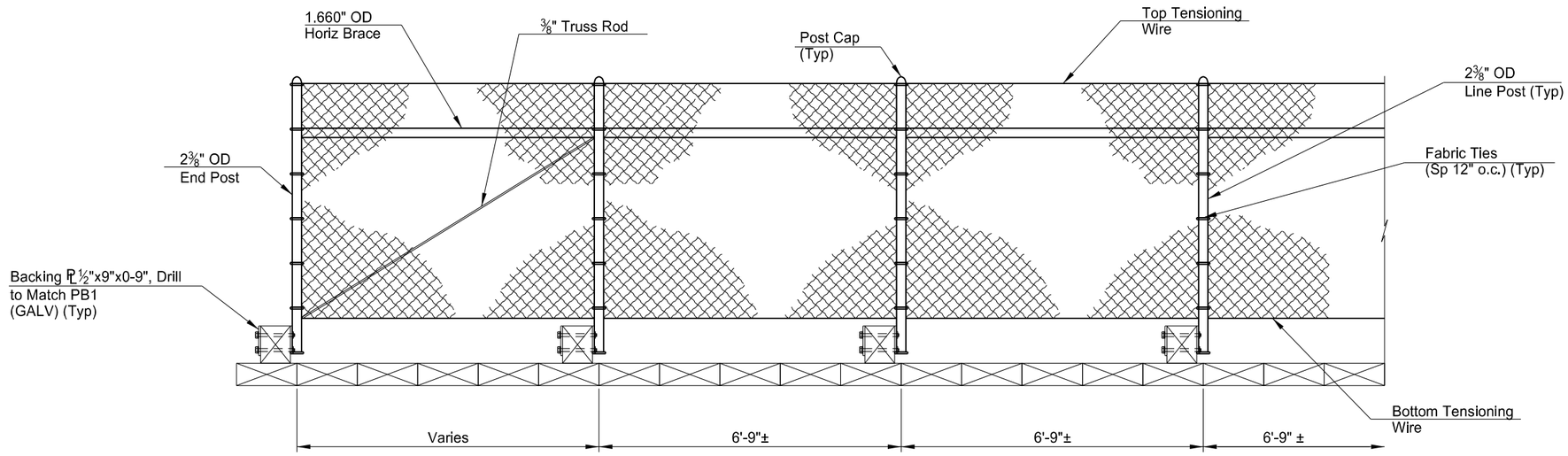

FENCE ELEVATION

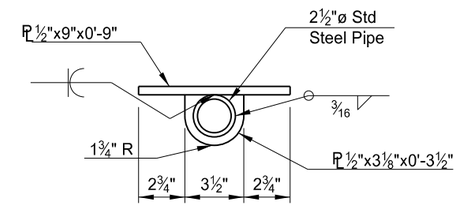

PLAN

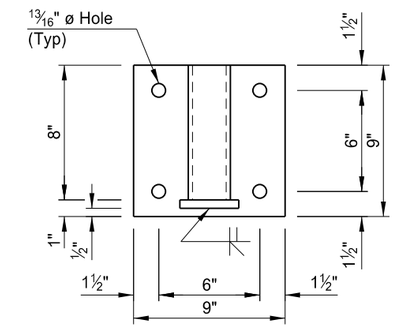

POST BRACKET PB1
(GALV)

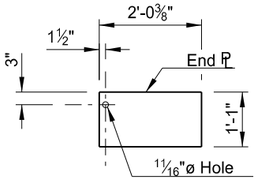

END VIEW

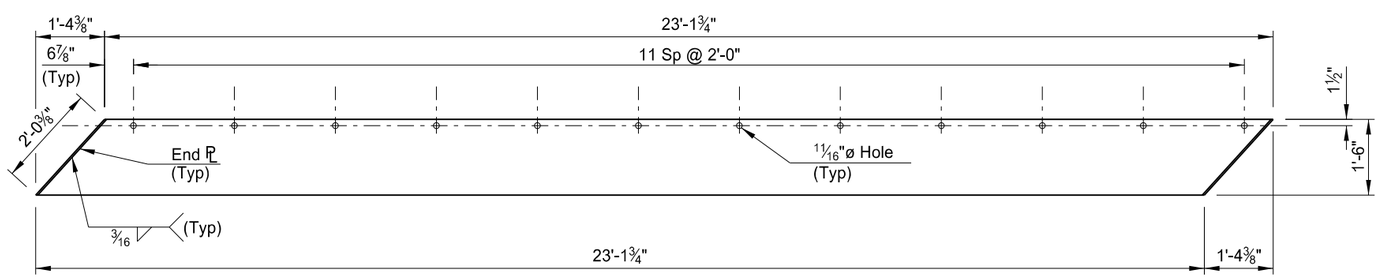

APRON PLATE

Fabricated plate 3/8"x18"
Galvanize after fabrication
Quantity = 12

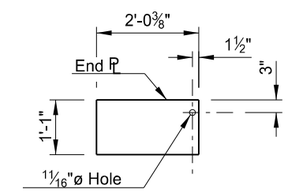

END VIEW

This document was originally issued and sealed by Colin A. Moran, Registration Number PE 5344, on 08/15/16 and the original document is stored at the North Dakota Department of Transportation

NOTES:

1. Chain link fence to be in accordance with NDDOT Standard D-752-2 except as noted otherwise.
2. Include all costs to supply, fabricate and install apron plates and fasteners in the unit price bid item, "Untreated Timber".

QUANTITIES	
PEDESTRIAN FENCE	351 LF

BNSF RAILWAY
1 MILE NORTH OF US 2

BNSF Ry. Br.0033-0085.600
SHOOFLY BRIDGE

PEDESTRIAN FENCE & APRON PLATE DETAILS

STATE	PROJECT NUMBER	SECTION NO.	SHEET NO.
ND	NHU-3-020(074)103	170	23

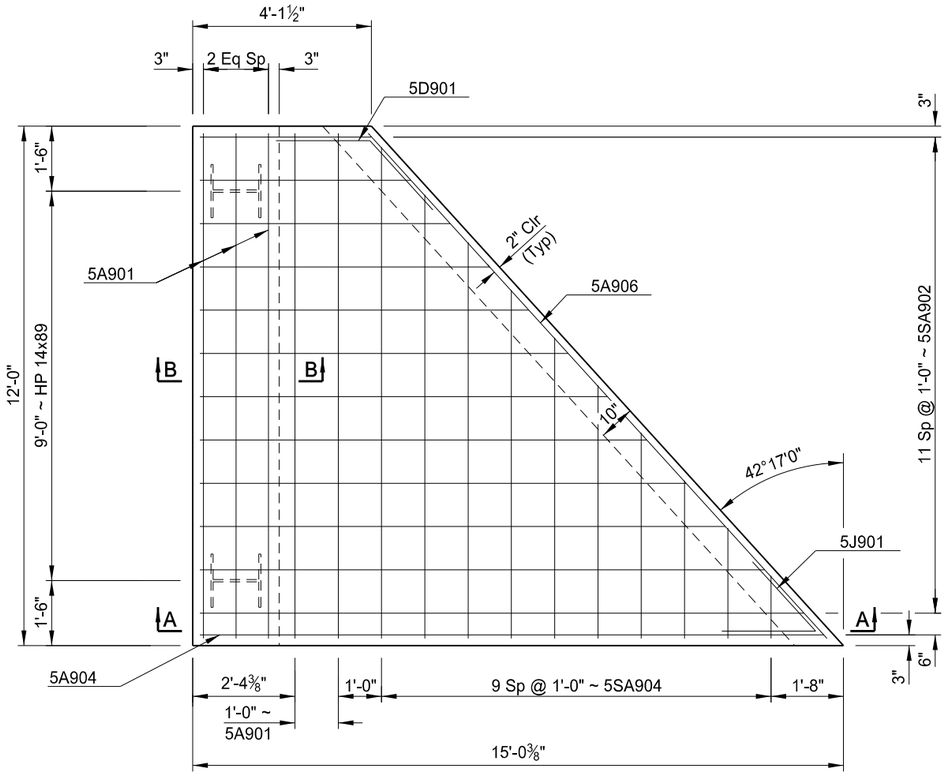

PLAN
(Showing Top Reinforcing)

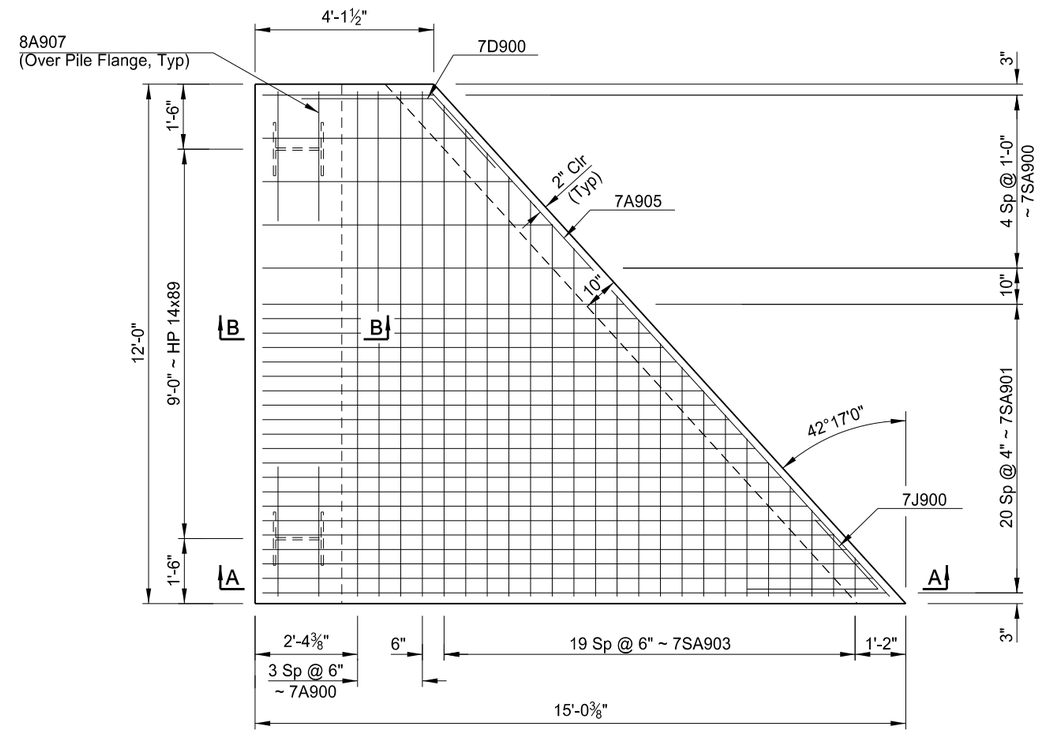

PLAN
(Showing Bottom Reinforcing)

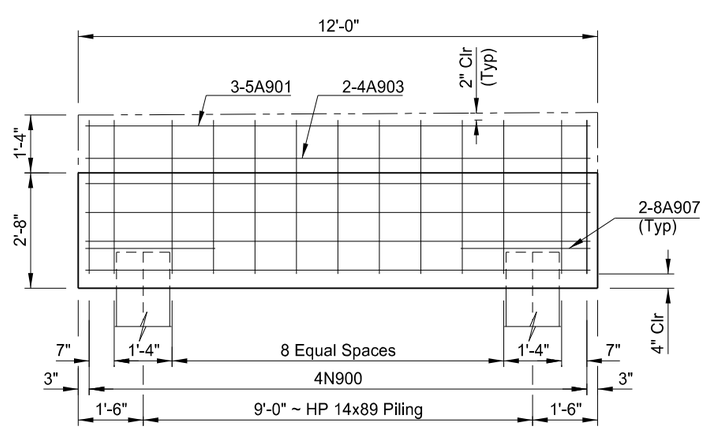

GRADE BEAM ELEVATION

This document was originally issued and sealed by Colin A. Moran, Registration Number PE 5344, on 08/15/16 and the original document is stored at the North Dakota Department of Transportation

NOTE:
See Dwg 20-103.403-24 for Sections A-A and B-B.

QUANTITIES

SEE DWG 20-103.403-24

BNSF RAILWAY
1 MILE NORTH OF US 2

BNSF Ry. Br.0033-0085.600
SHOOFLY BRIDGE

APPROACH SLAB DETAILS

STATE	PROJECT NUMBER	SECTION NO.	SHEET NO.
ND	NHU-3-020(074)103	170	24

SKEW ANGLE = 42°17'0"

BAR LIST - (PER SLAB)

SIZE	MARK	NO.	LENGTH
7	A900	8	11'-8"
5	A901	5	11'-8"
7	A902	4	8'-8"
4	A903	8	11'-8"
5	A904	1	14'-5"
7	A905	1	15'-9"
5	A906	1	15'-9"
8	A907	4	3'-0"
7	D900	1	6'-6"
5	D901	1	4'-4"
7	J900	1	6'-6"
5	J901	1	4'-4"
4	N900	13	11'-4"
7	SA900	1	28'-9"
7	SA901	1	238'-10"
5	SA902	1	107'-0"
7	SA903	1	120'-10"
5	SA904	1	63'-4"

ESTIMATED MATERIAL QUANTITIES

REINFORCING STEEL (LBS)	CONCRETE (CY)
1,586	8.0

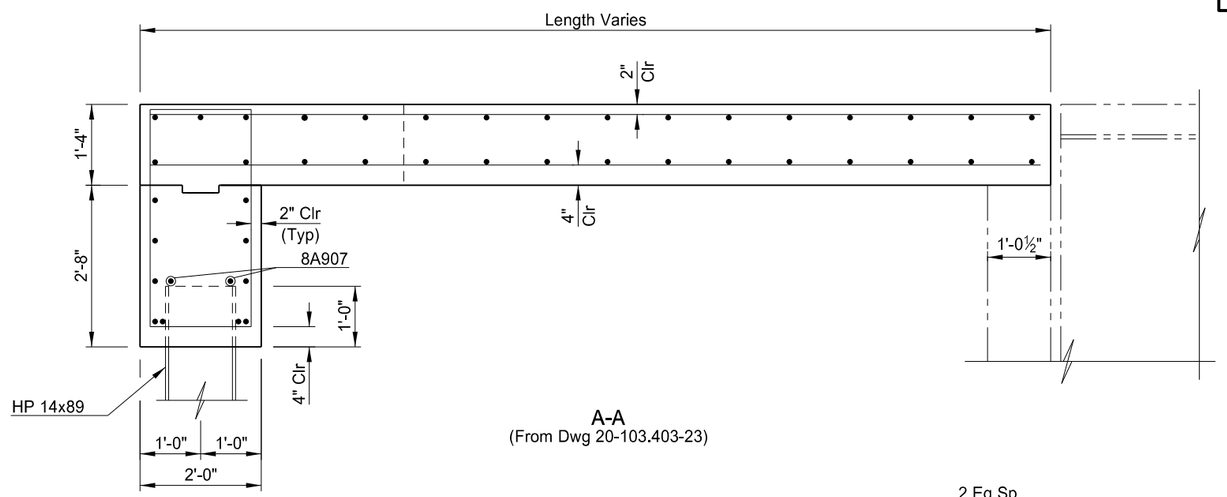

A-A
(From Dwg 20-103.403-23)

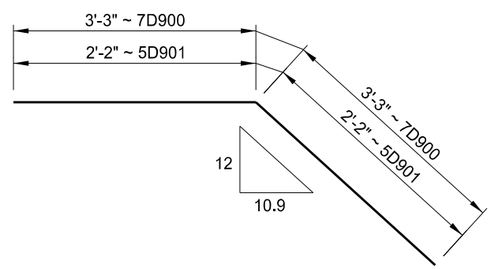

7D900 & 5D901

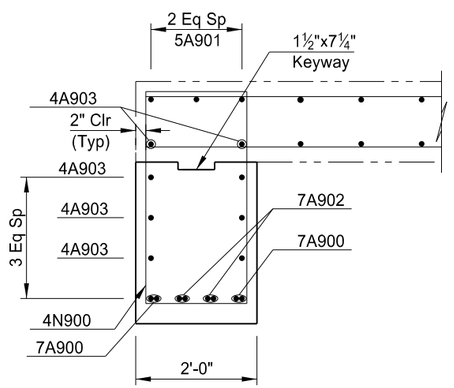

B-B
(From Dwg 20-103.403-23)

NOTE:

The estimated quantities shown are for information purposes only. All materials including concrete, reinforcing bars, preformed joint filler, silicone sealant, and all labor required to build the approach slabs are included in the pay item "PILE SUPPORTED APPROACH SLAB." The concrete will be Class AAE-3. The reinforcing steel will be Grade 60 and the steel piles will be Grade 50.

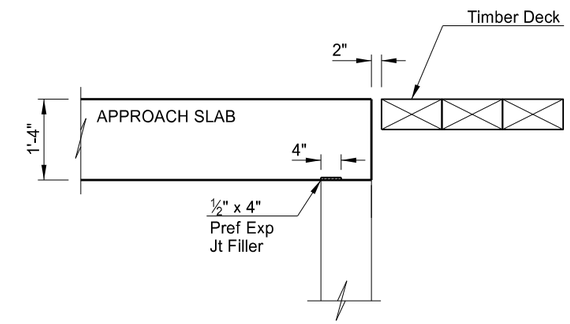

APPROACH SLAB JOINT DETAIL
(Along Skew)

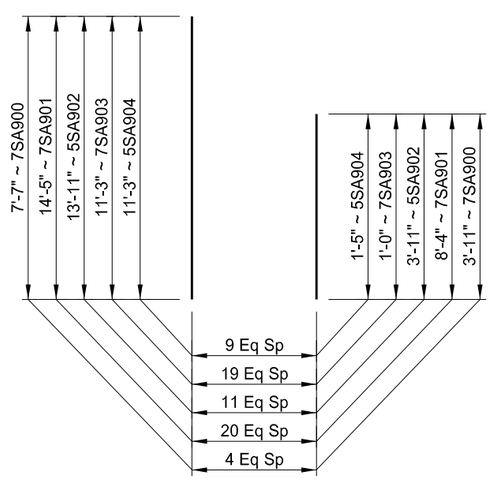

7SA900, 7SA901, 5SA902, 7SA903, & 5SA904

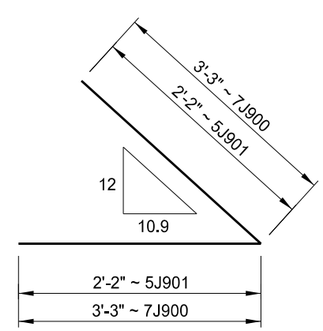

7J900 & 5J901

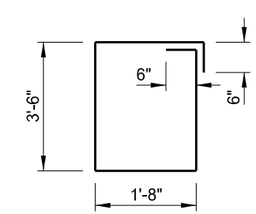

4N900

This document was originally issued and sealed by Colin A. Moran, Registration Number PE 5344, on 08/15/16 and the original document is stored at the North Dakota Department of Transportation

QUANTITIES	(ONE APPROACH SLAB)
PILE SUPPORTED APPROACH SLAB	12.8 SY

BNSF RAILWAY
1 MILE NORTH OF US 2

BNSF Ry. Br.0033-0085.600
SHOOFLY BRIDGE

APPROACH SLAB DETAILS

BRIDGE CODE		STATE	PROJECT NUMBER	SECTION NO.	SHEET NO.
X631		ND	NHU-3-020(074)103	170	25

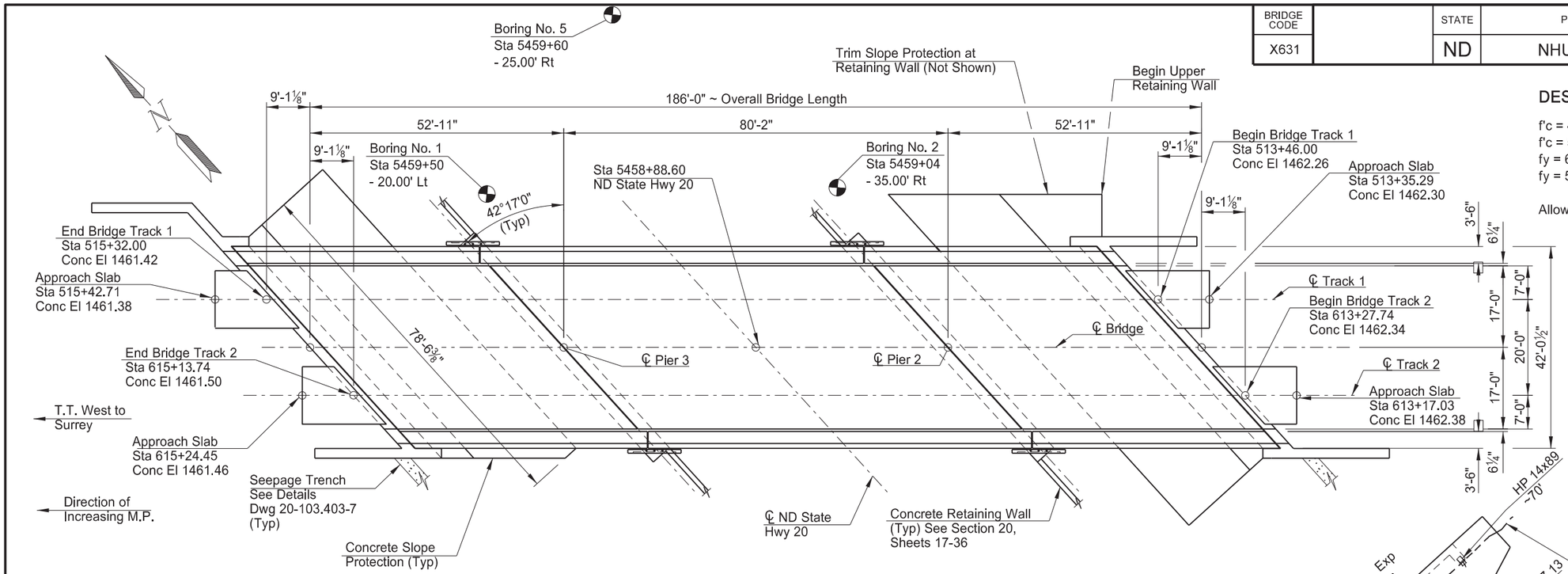

PLAN

DESIGN STRENGTHS:

f'c = 4,000 psi ~ Class AAE-3 Concrete
f'c = 5,000 psi ~ Prestressed Concrete Fascia Girder
fy = 60,000 psi ~ Reinforcing Steel
fy = 50,000 psi ~ Structural Steel

Allowable Stress Design

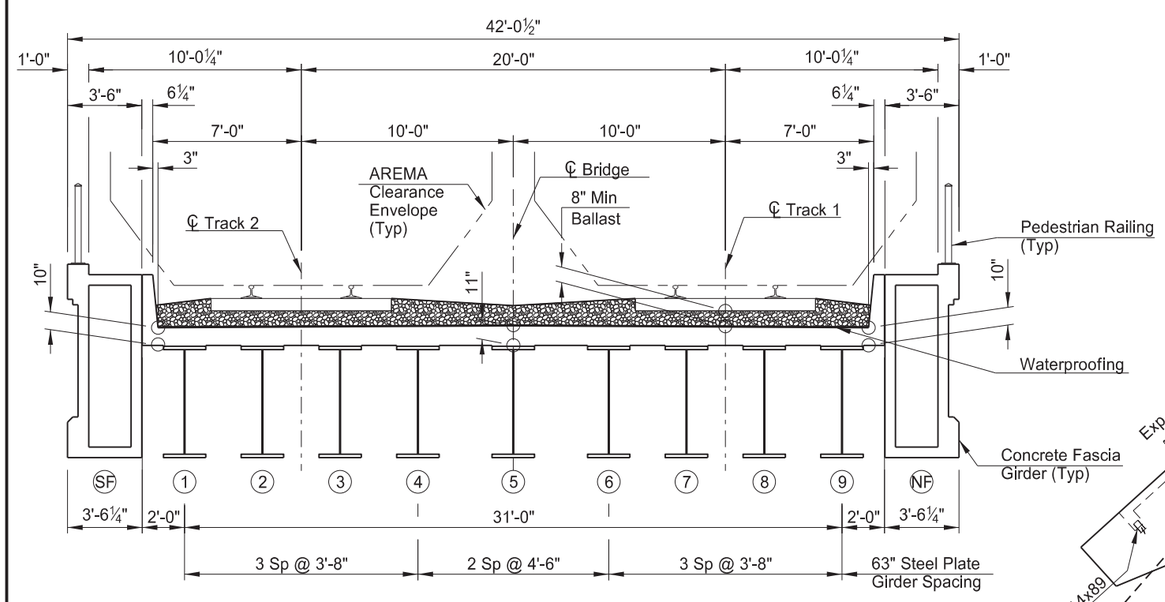

TYPICAL SECTION

This document was originally issued and sealed by Colin A. Moran, Registration Number PE 5344, on 08/26/16 and the original document is stored at the North Dakota Department of Transportation

SPECIAL PROVISIONS	
SP 328(14)	PAINTING OVER GALVANIZED STEEL
SP 339(14)	WATERPROOFING

STANDARD DRAWINGS
D-258-1, D-622-1, D-714-18

COOPER E80 OR 100KIP (4 AXLE)

SITE 2

SURVEY CONTROL POINTS			
POINT	NORTHING	EASTING	ELEVATION
4	410064.3380	2367815.0500	1445.3140
20	409786.0080	2368197.0630	1442.4510

NORTH DAKOTA
DEPARTMENT OF TRANSPORTATION
BNSF RAILWAY
1 MILE NORTH JUNCTION US 2

BRIDGE LAYOUT
BNSF Ry. Br.0033-0085.600
PROJECT: NHU-3-020(074)103
STATION: 5458+88.60
RAMSEY COUNTY

08/29/16 — DATE
Jon Ketterling /s/ — BRIDGE ENGINEER

STRUCTURAL NOTES

100 **SCOPE OF WORK:** This project consists of building a three span welded steel plate girder bridge with an overall bridge length of 186'-0" and a cast in place concrete deck width of 35'-0". Additional work at this site consists of the removal of the existing structure and retaining walls as well as removal of the temporary Shoofly Bridge.

100 **GENERAL:** Include the cost of furnishing and placing preformed expansion joint filler, concrete inserts, tiewire, bar spacers, bar supports, and other miscellaneous items in the price bid for "Class AAE-3 Concrete".

100 **GENERAL:** The Contractor is responsible for calling 1-800-533-2891 to arrange for a BNSF underground cable locate. BNSF form "Underground Cable Location & Acknowledge" will be completed by a BNSF representative and a copy provided to the contractor. The contractor must have this completed form in possession at the job site at all times.

100 **GENERAL:** The Contractor must follow the construction sequencing found in Section 6, Sheets 2 and 3, Plan Note 704-P02, unless an alternative construction schedule is submitted to and approved by the Engineer.

100 **HAZARDOUS MATERIAL:** The existing structural steel is painted with lead-based paint. Remove any loose and peeling paint found on the existing structural steel according to the North Dakota Department of Health's (NDDOH) management of lead based paint debris.

105 **WORK DRAWINGS:** Submit the Structural Steel, Prestressed Concrete Fascia Girders, Bearings, and Pedestrian Railing work drawings to the Engineer for review. Use the following minimum text sizes on all work drawing sheets:

Dimensions and Notes = 0.08"
Detail Subtitles = 0.09"
Detail Titles = 0.10"

202 **REMOVAL OF STRUCTURE - SITE 1:** Include all work required to remove the Shoofly Bridge upon completion of the new permanent bridge in the lump sum bid item, "Removal of Structure - Site 1". Remove the bridge in its entirety and cut piling off as directed by Note 704-P02 of Section 6, Sheets 2 and 3.

202 **REMOVAL OF STRUCTURE - SITE 2:** The existing structure is a 3-span steel girder and concrete slab bridge, 124'-0" long with a deck width of 40'-0". The retaining walls and substructures are made of concrete. The wingwalls are made of concrete and supported by concrete caissons. Cut the wingwall caissons 3 feet below the proposed bottom of retaining wall footing elevations. Remove all other structure components in their entirety. Include all work required to remove the bridge, wingwall and retaining walls in the lump sum bid item, "Removal of Structure - Site 2".

Include all excavation to construct the new retaining walls in the lump sum bid item, "Removal of Structure - Site 2". The additional excavation for the new lower retaining wall footings vary from 2 feet to 9 feet below the existing retaining wall footing elevations. See the existing retaining wall plans for details.

Complete and submit SFN 17987 Asbestos Notification of Demolition and Renovation to the North Dakota Department of Health 10 days prior to beginning the removal of concrete.

210 **EXCAVATION:** Include the excavation at the abutments, approach slab footings and the excavation required to build the piers in the lump sum bid item "Class 1 Excavation - Site 2".

210 **FOUNDATION PREPARATION:** Include the price of providing shoring in the lump sum cost of "Foundation Preparation". Shoring will be required to protect the roadway embankment during excavation at the piers. The shoring is to be designed by the contractor in accordance with the joint BNSF/UPRR Guidelines for Temporary Shoring published January 24, 2007.

210 **FOUNDATION FILL:** Provide foundation fill meeting the requirements of Section 816.02, Class 5 and compact in accordance with Section 302.04B.

258 **CONCRETE SLOPE PROTECTION:** The concrete slope protection will be limited to the cast-in-place type shown on Standard D-258-1.

602 **SURFACE FINISH "D":** Surface finish "D" is required for the exterior face of the fascia beam and all exposed substructure surfaces. Provide surface finish color meeting federal 595B Color Number 27722, "Light Gray".

Provide a 12" x 12" sample consisting of the surface finish applied to a high density foam board and the corresponding material data sheet for approval by the Engineer a minimum of 3 weeks prior to installation on any bridge surface.

602 **DECK CONCRETE:** Beams have slight variations in the anticipated camber. To build the deck to the designated thickness will require slight adjustments in deck elevation and/or riser dimensions. These adjustments result in minor concrete quantity discrepancies. Consider any potential discrepancy in the bid unit price, "Class AAE-3 Concrete". The Department will pay plan quantity of "Class AAE-3 Concrete".

602 **BRIDGE DECK AND APPROACH SLAB CURING:** Cure the bridge deck and approach slabs with the wet-cure method. No work is to be done on the bridge deck or approach slabs while the wet cure is in progress, including forming the ballast guards. No vehicles or equipment not required in the curing process may be on the bridge deck or approach slabs.

602 **CONCRETE AGGREGATE TESTING:** In addition to aggregate testing in Section 802 of the Standard Specifications for Road and Bridge Construction, AASHTO T 303 will be conducted. The contractor must have coarse and fine aggregates used in concrete be tested for alkali silica reactivity by an independent lab. If the average of the test results show an expansion greater than 0.10 percent then the aggregate will not be allowed for use on the project. Test results must be given to the engineer at least 30 calender days before the aggregate is used on the project.

The aggregate tested must be from the stockpiled material used for the project.

602 **LOW ALKALI CEMENT:** In addition to the requirements of NDDOT 804.01, the cement must also meet the requirements of Table 2 in AASHTO M 85.

602 **FLY ASH:** For all concrete, incorporate between 25% and 29% fly ash by weight.

602 **FORM LINERS:** Include the cost to provide and install the form liners in the unit price bid for "Class AAE-3 Concrete".

This document was originally issued and sealed by Colin A. Moran, Registration Number PE 5344, on 08/26/16 and the original document is stored at the North Dakota Department of Transportation

BNSF RAILWAY
1 MILE NORTH OF US 2

BNSF Ry. Br.0033-0085.600

STRUCTURAL NOTES

STRUCTURAL NOTES

616 **STRUCTURAL STEEL:** Include the cost of fabricating, furnishing, and erecting the steel girders and diaphragms in the lump sum bid for this item. Include the cost for fabricating and furnishing the bearing stiffeners, intermediate stiffeners and jacking beams in the lump sum bid for this item. The estimated weight of steel is 677,000 lbs and does not include weight of welds, bolts, studs or deductions for holes.

Steel for the superstructure, as indicated on the bridge plans, will be supplied by the Contractor. Include the cost of loading, hauling, unloading, and erecting the structural steel in the lump sum bid for this item. The Contractor must take care not to damage the steel during the loading, hauling, unloading and erecting operations. Repair to damaged steel during the loading, hauling, unloading, or erecting operations will be at the Contractor's expense.

Use weld metal equivalent to the base metal in strength, corosion resistance and weathering appearance. Clean all surfaces per SSPC-SP6. Follow AREMA standards for fabrication and workmanship.

The mechanical properties and installation of the stud shear connectors will conform to the latest AREMA Manual and AASHTO/AWS D1.5 Bridge Welding Code, Section 7.

Perform stud bend tests at the start of each workday, when welding has been interrupted for an hour or more, when changing grounds, when changing weld settings and when changing cable loop due to arc blow in addition to the stud bend test of Article 7.7.1.4 of the AASHTO/AWS D1.5 Bridge Welding Code. No more than 500 studs should be welded without the welds being field bend tested according to the specified procedure. The Contractor may leave in the bent position tested studs that show no sign of failure, as determined by the Engineer.

616 **GIRDER SETTING:** Set the girders above the traveled roadways between the hours of 10:00 p.m. and 5:00 a.m.

616 **PAINT AND PAINTING:** Paint structural steel color No. 17038 (black) in accordance with Federal Standard No. 595B.

622 **PILING:** Piling will be driven with a steam, air, or diesel hammer with a rated energy and ram weight not less than 98,613 foot-pound-tons, as computed by the formula W(E-22,592) + .873E, where W is the weight of the ram in tons and E is the rated hammer energy. In no case will the ram weight be less than 4,000 pounds. The hammer must be run at an energy that produces a penetration at bearing between ½" and 3 inches in the last 10 blows.

624 **PEDESTRIAN RAILING:** Paint the pedestrian railings after fabrication in accordance with SP 328(14). Use the paint color black, color no. 17038 of the Federal Standard No. 595B colors. Include all costs associated with fabrication, assembly, galvanizing, painting and installation of the railings in the unit price bid for "Pedestrian Railing".

930 **ROADWAY CANOPY - SITE 2:** Construct a canopy above the traveled roadway and sidewalks under the existing structure during demolition, under the shoofly bridge during demolition and under the new structure during construction to protect traffic and pedestrians from falling material. The canopys are an added safeguard and does not relieve the Contractor of any responsibility for the safety of the public.

Erect the demolition canopys prior to removing any materials from the existing bridges and keep in place until all superstructure materials have been removed. Erect the construction canopy before installing forming for the new deck and keep in place until the new superstructure is complete. The canopys may be supported from the ground or suspended from the girders. Complete the erection of the canopys in a minimum amount of time and with the least inconvenience to the public.

Each canopy will be of a design and material selected by the Contractor and submitted to the Engineer for review. The minimum vertical clearance from the traveled roadway to the bottom of the canopy will be 15'-6". The minimum clearance from the sidewalk to the bottom of the canopy will be 8'-0".

The canopy will project a minimum distance of 5'-0" beyond the outside edge of the deck of the structure. The canopy will project a minimum distance of 5'-0" beyond the edge of the driving lanes beneath the structure.

After completion of the structure, each canopy will be removed and will remain the property of the Contractor. Include the construction, maintenance and removal of the roadway canopys in the contract lump sum unit price for "Roadway Canopy - Site 2".

930 **ELASTOMERIC BEARING PAD:** The reinforcing elastomeric bearing pads will meet the requirements of AREMA Manual for Railway Engineering and meet the requirements of ASTM D2137 using -40°C. The elastomeric material will have hardness of 60 durometer.

980 **BALLAST:** The ballast is to be supplied and placed by others.

DESIGN LOAD:
Live Load = Cooper E-80 or 100 kip (4 Axle) Alternate
Impact = AREMA for rolling equipment without hammer blow
Other Loads = AREMA
Maximum Ballast Depth = 30 inches

DESIGN GUIDELINE: AREMA 2015 Manual for Railway Engineering.

All welding will be in accordance with the AREMA Manual and the ANSI/AASHTO/AWS D1.5-2015 Bridge Welding Code.

DESIGN STRESSES: Design stresses for the following materials are in accordance with the AREMA Manual.

Structural steel in accordance with AREMA, Chapter 15 "Steel Structures", ASTM A709 GR. 50 Fy = 50,000 PSI.

Reinforcing steel in accordance with AREMA, Chapter 8 "Concrete Structures and Foundations", ASTM A615 Fy = 60,000 PSI.

Steel Piling in accordance with ASTM A572 GR. 50 Fy = 50,000 PSI.

WORK DRAWINGS: Submit the following work drawings to the Engineer for review.

1. Structural Steel
2. Prestressed Concrete Fascia Girders
3. Bearings (Allow 3 additional weeks for BNSF review)
4. Pedestrian Railing
5. Pier Formliner
6. Pier Medallion

This document was originally issued and sealed by Colin A. Moran, Registration Number PE 5344, on 08/26/16 and the original document is stored at the North Dakota Department of Transportation

BNSF RAILWAY
1 MILE NORTH OF US 2

BNSF Ry. Br.0033-0085.600

STRUCTURAL NOTES

STATE	PROJECT NUMBER	SECTION NO.	SHEET NO.
ND	NHU-3-020(074)103	170	28

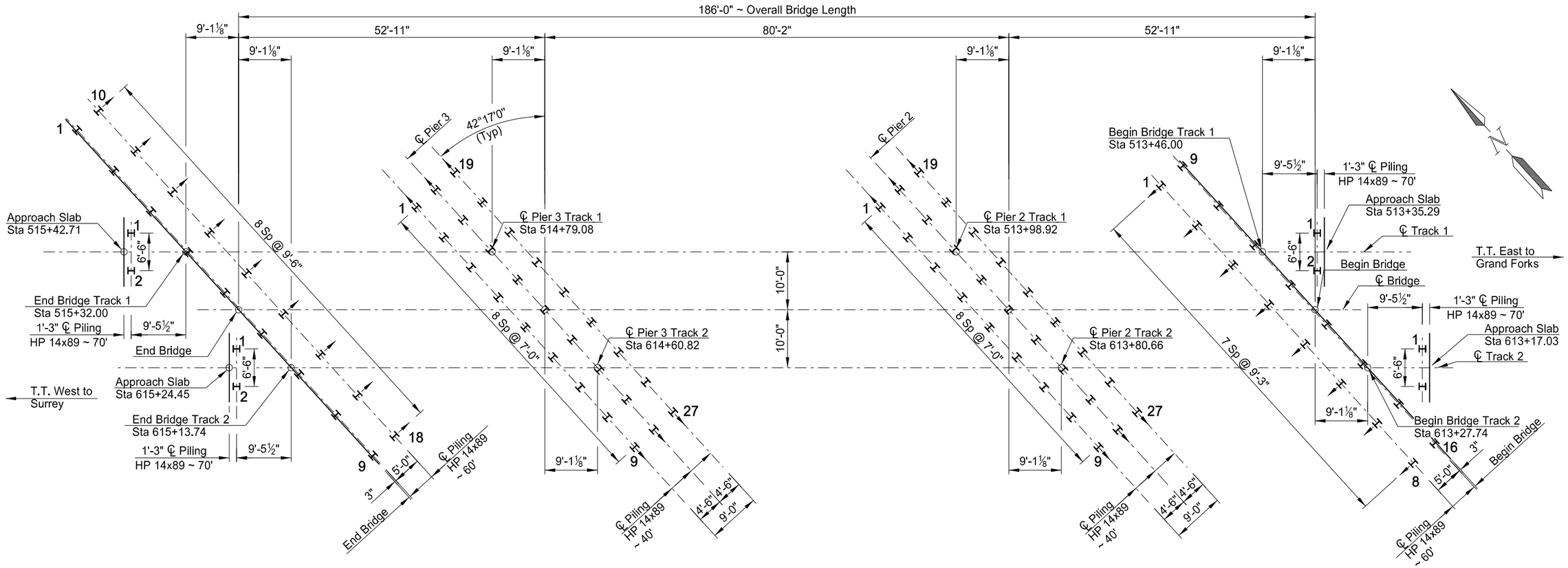

PILING LAYOUT

Drive HP 14x89 piles to 164 tons.

	BRIDGE PILE COORDINATES						
	PILE	NORTHING	EASTING		PILE	NORTHING	EASTING
NE APPR	1	409,996.3138	2,368,231.6039	PIER 3	1	410,101.7098	2,368,117.0314
	2	409,991.4065	2,368,227.3415		9	410,045.7243	2,368,118.3074
SE APPR	1	409,969.2875	2,368,232.2199		19	410,101.9149	2,368,126.0290
	2	409,964.3802	2,368,227.9574		27	410,045.9294	2,368,127.3050
ABUT 1	1	410,020.1904	2,368,216.6233	ABUT 4	1	410,150.2447	2,368,081.5171
	8	409,955.4572	2,368,218.0987		9	410,074.2645	2,368,083.2488
	9	410,020.3044	2,368,221.6220		10	410,150.3587	2,368,086.5158
	16	409,955.5712	2,368,223.0974		18	410,074.3784	2,368,088.2475
PIER 2	1	410,049.1393	2,368,177.5544	NW APPR	1	410,130.6885	2,368,076.9020
	9	409,993.1538	2,368,178.8304		2	410,125.7812	2,368,072.6395
	19	410,049.3444	2,368,186.5520	SW APPR	1	410,103.6621	2,368,077.5179
	27	409,993.3589	2,368,187.8280		2	410,098.7549	2,368,073.2555

NOTE:

1. For double acting or single acting diesel hammers, calculate the safe bearing value of piles by the following formula:

$$P = \frac{3.5E}{S + 0.2} \times \frac{W + 0.2M}{W + M}$$

Where:
P = Safe bearing value, in pounds.
W = Weight of striking parts (ram), in pounds.
M = Weight of parts being driven, in pounds. Includes pile weight, anvil (if any), driving cap, etc.
E = Energy per blow, in foot-pounds.
S = Average penetration of pile in inches per blow for last ten blows for ten blows for steam, air, or diesel hammer.

For single acting hammers, calculate E by multiplying observed stroke (ft) and W (lbs).

2. Arrow indicates direction of pile batter. Pile batter is 2:12 at locations shown.

This document was originally issued and sealed by Colin A. Moran, Registration Number PE 5344, on 08/15/16 and the original document is stored at the North Dakota Department of Transportation

BNSF RAILWAY
1 MILE NORTH OF US 2

BNSF Ry. Br.0033-0085.600

PILING LAYOUT

STATE	PROJECT NUMBER	SECTION NO.	SHEET NO.
ND	NHU-3-020(074)103	170	29

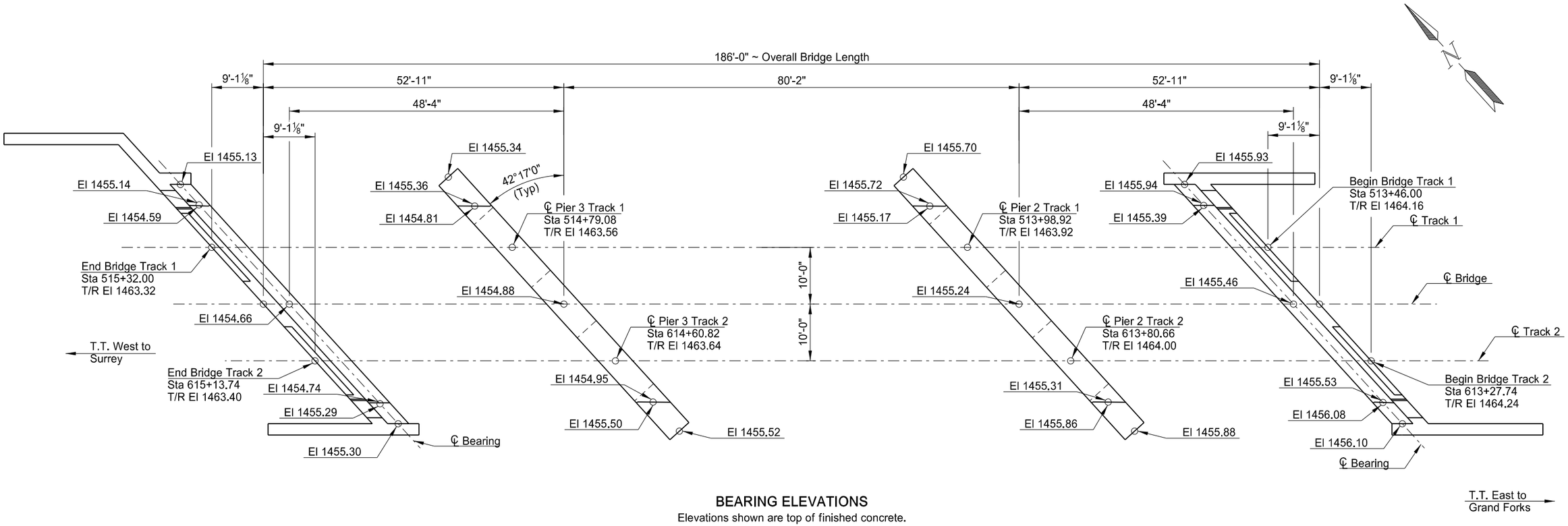

BEARING ELEVATIONS

Elevations shown are top of finished concrete.

This document was originally issued and sealed by Colin A. Moran, Registration Number PE 5344, on 08/15/16 and the original document is stored at the North Dakota Department of Transportation

NOTE:
T/R = Top of Rail

BNSF RAILWAY
1 MILE NORTH OF US 2

BNSF Ry. Br.0033-0085.600

BEARING ELEVATIONS

STATE	PROJECT NUMBER	SECTION NO.	SHEET NO.
ND	NHU-3-020(074)103	170	30

℄ GIRDER 1	℄ GIRDER 2	℄ GIRDER 3	℄ GIRDER 4	℄ GIRDER 5	℄ GIRDER 6	℄ GIRDER 7	℄ GIRDER 8	℄ GIRDER 9
1461.51	1461.52	1461.52	1461.52	1461.53	1461.48	1461.45	1461.42	1461.38
1461.53	1461.54	1461.54	1461.54	1461.55	1461.51	1461.47	1461.44	1461.41
1461.55	1461.56	1461.56	1461.56	1461.57	1461.53	1461.49	1461.46	1461.43
1461.58	1461.58	1461.58	1461.58	1461.59	1461.55	1461.52	1461.48	1461.45
1461.60	1461.60	1461.60	1461.61	1461.61	1461.57	1461.54	1461.50	1461.47
1461.62	1461.62	1461.63	1461.63	1461.63	1461.59	1461.56	1461.53	1461.49
1461.64	1461.64	1461.65	1461.65	1461.65	1461.61	1461.58	1461.55	1461.51
1461.66	1461.66	1461.67	1461.67	1461.68	1461.63	1461.60	1461.57	1461.53
1461.68	1461.69	1461.69	1461.69	1461.70	1461.66	1461.62	1461.59	1461.56
1461.70	1461.71	1461.71	1461.71	1461.72	1461.68	1461.64	1461.61	1461.58
1461.73	1461.73	1461.73	1461.74	1461.74	1461.70	1461.67	1461.63	1461.60
1461.73	1461.74	1461.74	1461.74	1461.75	1461.71	1461.67	1461.64	1461.61
1461.74	1461.74	1461.74	1461.75	1461.75	1461.71	1461.68	1461.64	1461.61
1461.77	1461.78	1461.78	1461.78	1461.79	1461.75	1461.71	1461.68	1461.65
1461.81	1461.81	1461.81	1461.82	1461.82	1461.78	1461.75	1461.71	1461.68
1461.84	1461.85	1461.85	1461.85	1461.86	1461.82	1461.78	1461.75	1461.72
1461.88	1461.88	1461.89	1461.89	1461.89	1461.85	1461.82	1461.79	1461.75
1461.91	1461.92	1461.92	1461.92	1461.93	1461.89	1461.85	1461.82	1461.79
1461.95	1461.95	1461.96	1461.96	1461.96	1461.92	1461.89	1461.86	1461.82
1461.98	1461.99	1461.99	1461.99	1462.00	1461.96	1461.92	1461.89	1461.86
1462.02	1462.02	1462.03	1462.03	1462.03	1461.99	1461.96	1461.93	1461.89
1462.06	1462.06	1462.06	1462.07	1462.07	1462.03	1462.00	1461.96	1461.93
1462.09	1462.09	1462.10	1462.10	1462.10	1462.06	1462.03	1462.00	1461.96
1462.10	1462.10	1462.10	1462.11	1462.11	1462.07	1462.04	1462.00	1461.97
1462.12	1462.12	1462.13	1462.13	1462.13	1462.09	1462.06	1462.03	1461.99
1462.14	1462.14	1462.15	1462.15	1462.15	1462.11	1462.08	1462.05	1462.01
1462.16	1462.17	1462.17	1462.17	1462.18	1462.14	1462.10	1462.07	1462.04
1462.18	1462.19	1462.19	1462.19	1462.20	1462.16	1462.12	1462.09	1462.06
1462.21	1462.21	1462.21	1462.22	1462.22	1462.18	1462.14	1462.11	1462.08
1462.23	1462.23	1462.23	1462.24	1462.24	1462.20	1462.17	1462.13	1462.10
1462.25	1462.25	1462.25	1462.26	1462.26	1462.22	1462.19	1462.15	1462.12
1462.27	1462.27	1462.28	1462.28	1462.28	1462.24	1462.21	1462.18	1462.14
1462.29	1462.29	1462.30	1462.30	1462.30	1462.26	1462.23	1462.20	1462.16
1462.31	1462.31	1462.32	1462.32	1462.33	1462.29	1462.25	1462.22	1462.19
1462.32	1462.32	1462.33	1462.33	1462.33	1462.29	1462.26	1462.23	1462.19

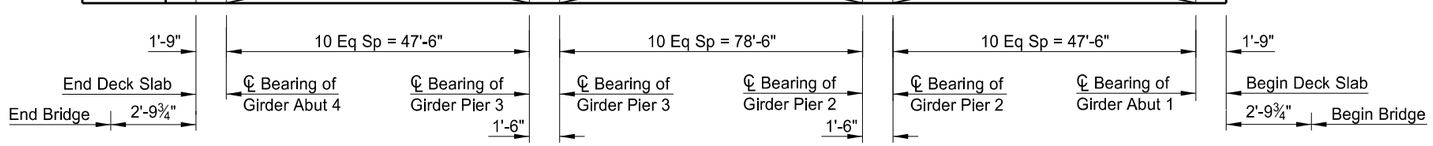

Girder 1 is the south girder.

SCREED ELEVATIONS

BRIDGE BID ITEMS

SPEC	CODE	ITEM DESCRIPTION	UNIT	QUANTITY
202	0108	REMOVAL OF STRUCTURE - SITE 1	L SUM	1
202	0109	REMOVAL OF STRUCTURE - SITE 2	L SUM	1
210	0103	CLASS 1 EXCAVATION - SITE 2	L SUM	1
210	0201	FOUNDATION PREPARATION	EA	1
258	0100	CONCRETE SLOPE PROTECTION	SY	421.0
602	0130	CLASS AAE-3 CONCRETE	CY	1,242.4
602	1134	PILE SUPPORTED APPROACH SLAB	SY	64.4
604	9550	PRESTRESSED CONCRETE FASCIA GIRDER	LF	360
612	0115	REINFORCING STEEL-GRADE 60	LBS	209,653
612	0116	REINFORCING STEEL-GRADE 60-EPOXY	LBS	2,993
616	5890	STRUCTURAL STEEL	L SUM	0.65
622	0068	STEEL PILING HP14 X 89	LF	4,760
624	0123	PEDESTRIAN RAILING	LF	392.4
930	3040	BEARINGS (EXPANSION)	EA	51
930	3042	BEARINGS (FIXED)	EA	3
930	7014	ROADWAY CANOPY - SITE 2	L SUM	1
930	8600	ELASTOMERIC BEARING PAD	SF	97.8
930	9537	ABUTMENT UNDERDRAIN SYSTEM	EA	2
930	9952	PIER MEDALLION	EA	4

This document was originally issued and sealed by Colin A. Moran, Registration Number PE 5344, on 08/15/16 and the original document is stored at the North Dakota Department of Transportation

BNSF RAILWAY
1 MILE NORTH OF US 2

BNSF Ry. Br.003-0085.600

SCREED ELEVATIONS &
BID ITEM QUANTITIES

STATE	PROJECT NUMBER	SECTION NO.	SHEET NO.
ND	NHU-3-020(074)103	170	31

NOTES:

1. The dimensions for the rodent screen are appoximate to allow for bending and a snug fit into the slot in the headwall.
2. Fabricate the rodent screen from flattened, expanded metal with screen opnenings of approximately 0.25 square inches. Use 16 gage metal for the screen and hot dip galvanize it after fabrication.
3. Use corrugated perforated fabric wrapped PE pipe that meets the requirements of Section 830.03 A.4. Provide fabric wrapping for the pipe the meets the requirements of Section 858.01 for D3 or D4 drainage fabric. Provide aggregate that meets the requirements of Section 816.03, Class 43. Provide foundation fill that meets the requirements of Section 210.
4. Include the cost to furnish and place the foundation fill, aggregate, corrugated perforated pipe and headwalls in the unit price bid item "Abutment Underdrain System".
5. Outlet both underdrains to the south.

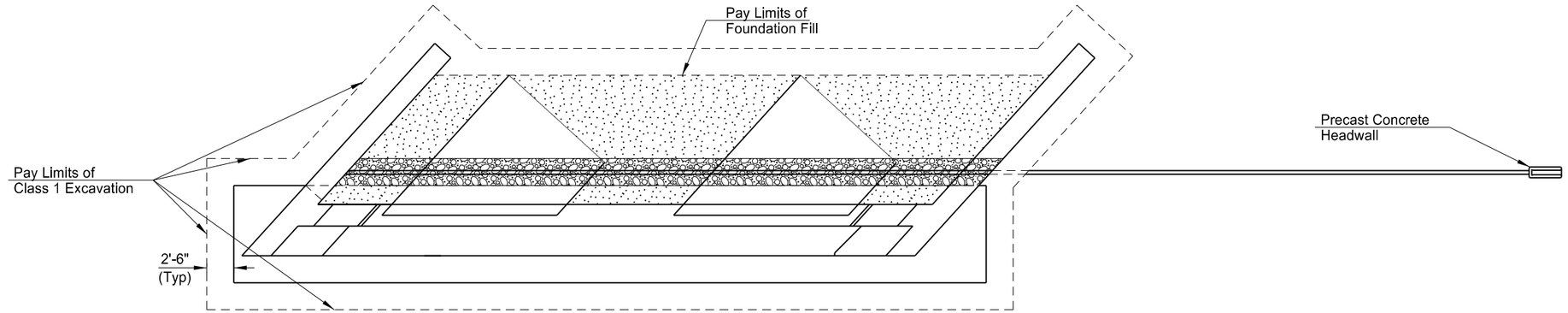

ABUTMENT 1 PLAN
(Abutment 4 Similar)

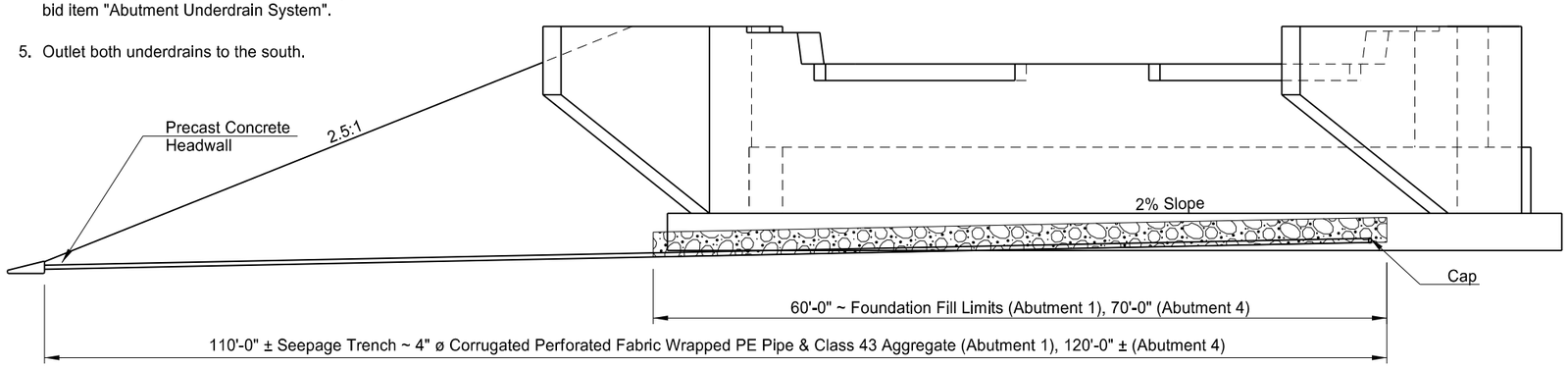

BACK FACE OF ABUTMENT 1
(Abutment 4 Similar)

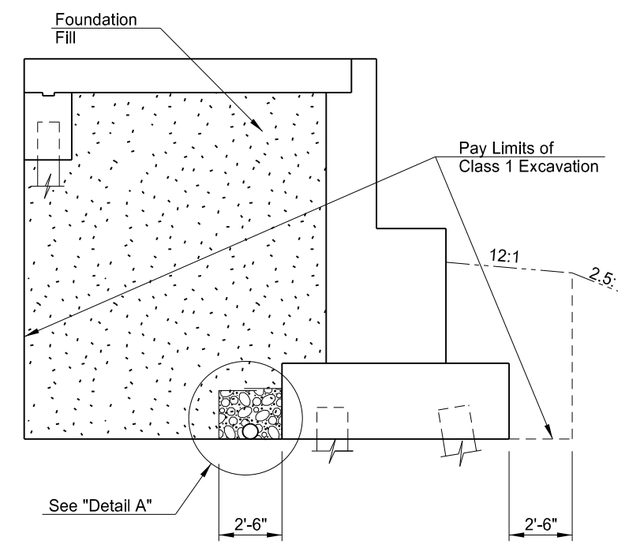

DETAIL AT ABUTMENT 1

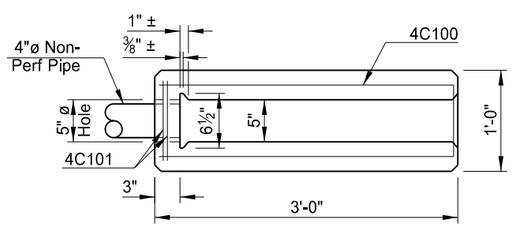

PLAN

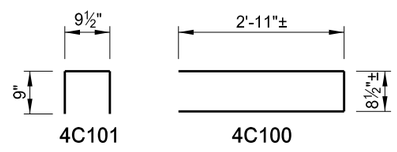

BENT BAR DETAILS

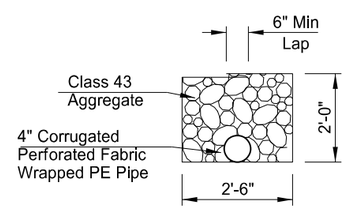

DETAIL "A"

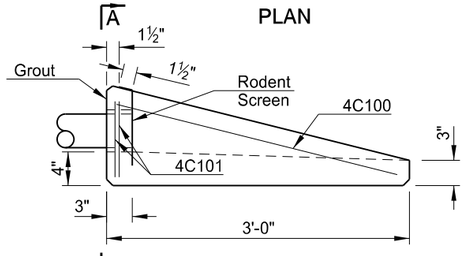

ELEVATION

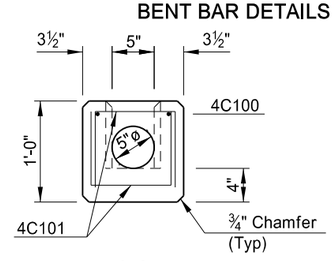

A-A

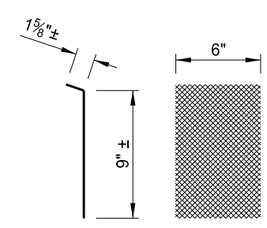

SIDE VIEW FRONT VIEW

PRECAST CONCRETE HEADWALL DETAILS

RODENT SCREEN DETAILS

This document was originally issued and sealed by Colin A. Moran, Registration Number PE 5344, on 08/26/16 and the original document is stored at the North Dakota Department of Transportation

BNSF RAILWAY
1 MILE NORTH OF US 2

BNSF Ry. Br.0033-0085.600

ABUTMENT 1 & 4 UNDERDRAIN & EXCAVATION DETAILS

STATE	PROJECT NUMBER	SECTION NO.	SHEET NO.
ND	NHU-3-020(074)103	170	32

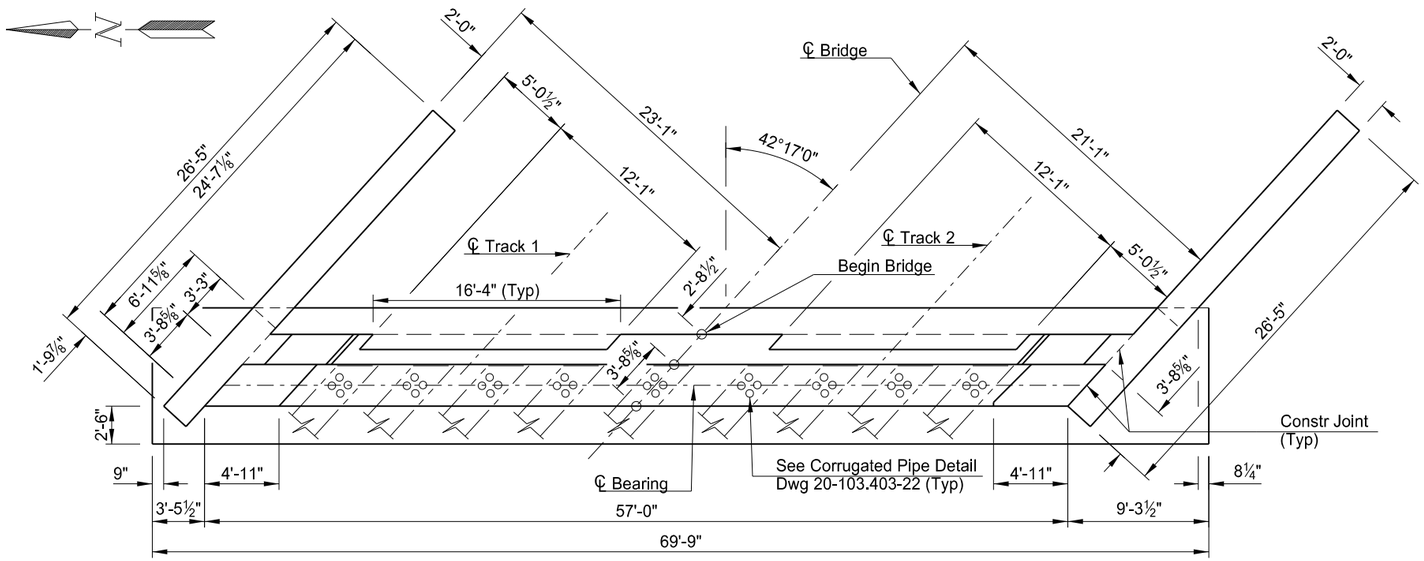

PLAN

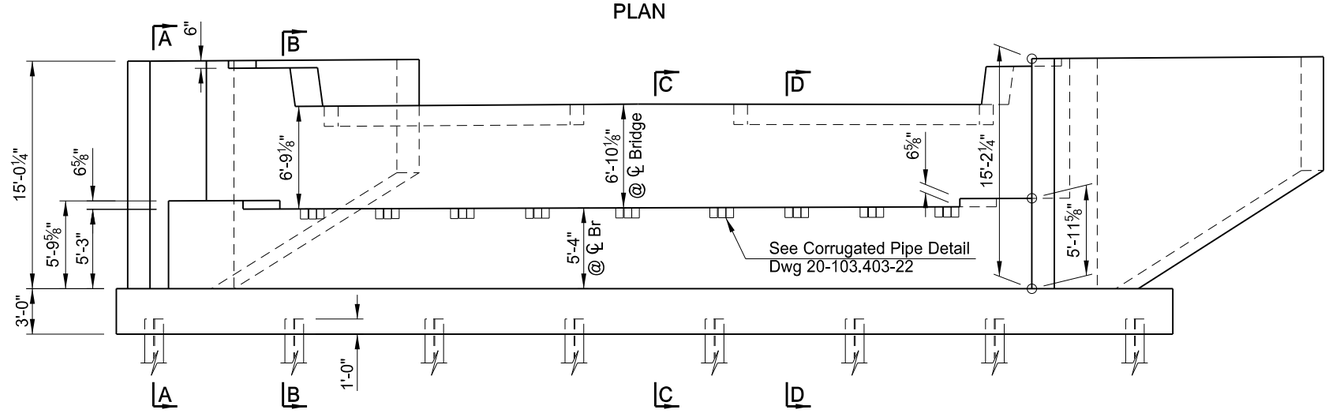

ELEVATION

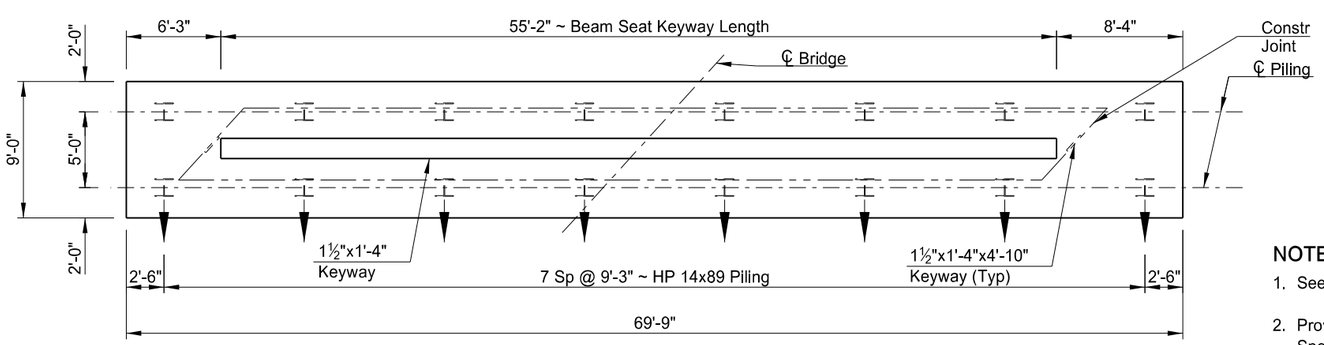

FOOTING PLAN

(Wingwalls Omitted)

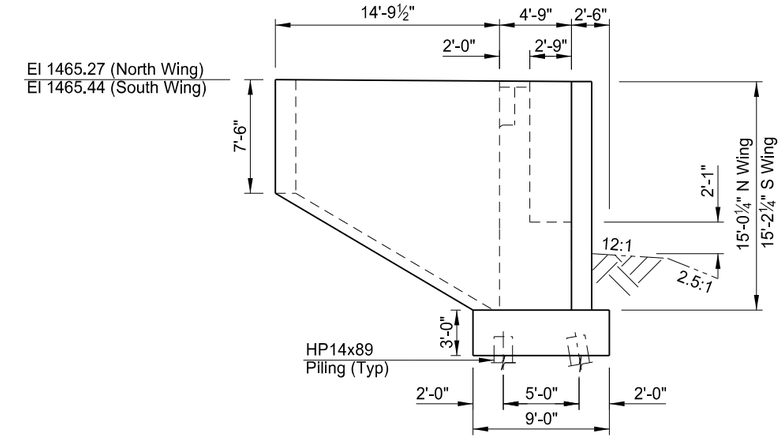

WING WALL ELEVATION

(See Dwg 20-103.403-13 for Skewed Dimensions)

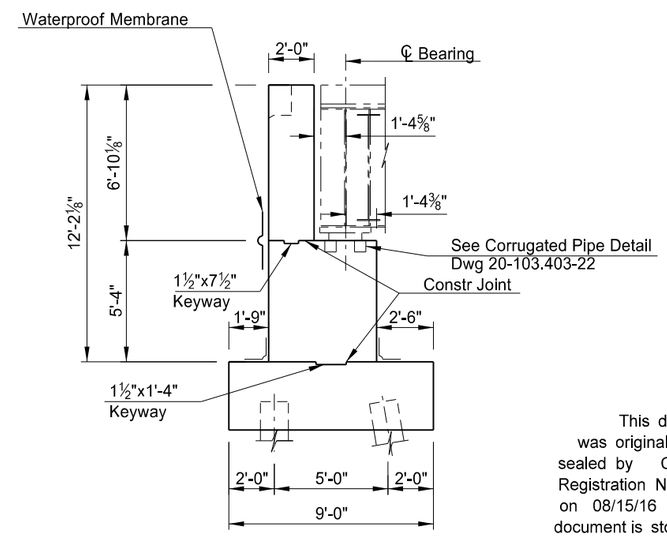

SECTION AT ℄ BRIDGE

This document was originally issued and sealed by Colin A. Moran, Registration Number PE 5344, on 08/15/16 and the original document is stored at the North Dakota Department of Transportation

NOTES:

1. See Dwg 20-103.403-18 for Sections A-A, B-B, C-C and D-D.
2. Provide waterproofing membrane meeting Section 602 of the NDDOT Specifications and Section 8.29.2 of the AREMA Manual. Include all material and work in the unit price bid item, "Class AAE-3 Concrete".
3. Pour the wing walls and the stem wall together.

QUANTITIES
SEE DWG 20-103.403-18

BNSF RAILWAY
1 MILE NORTH OF US 2

BNSF Ry. Br.0033-0085.600

ABUTMENT 1 DETAILS

STATE	PROJECT NUMBER	SECTION NO.	SHEET NO.
ND	NHU-3-020(074)103	170	33

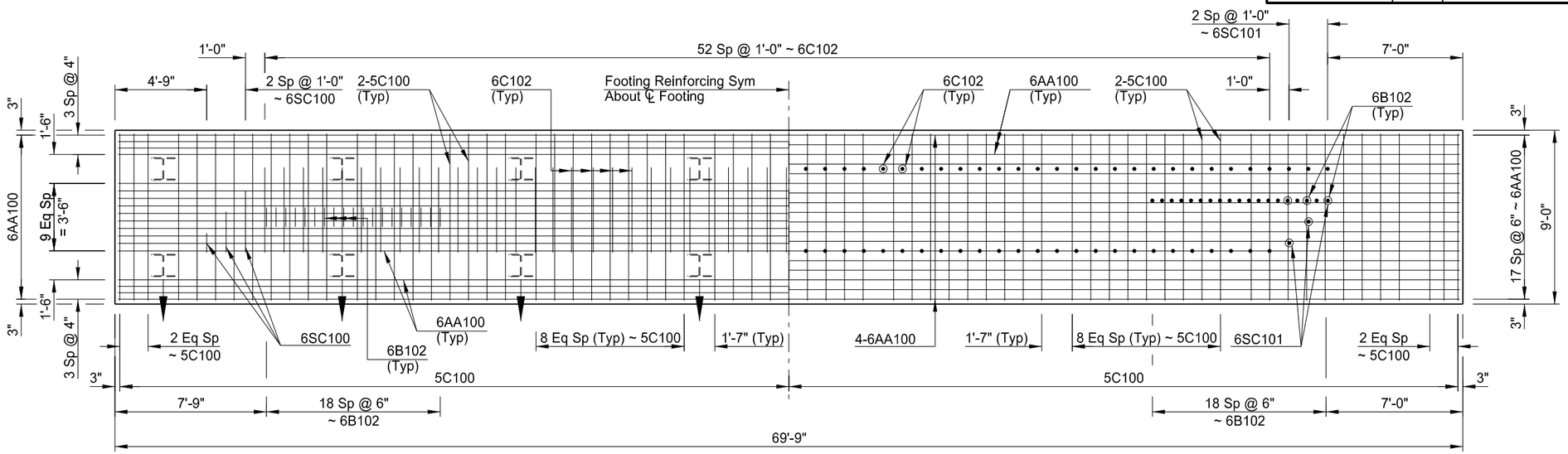

(Showing Bottom Reinforcement) (Showing Top Reinforcement)

FOOTING PLAN

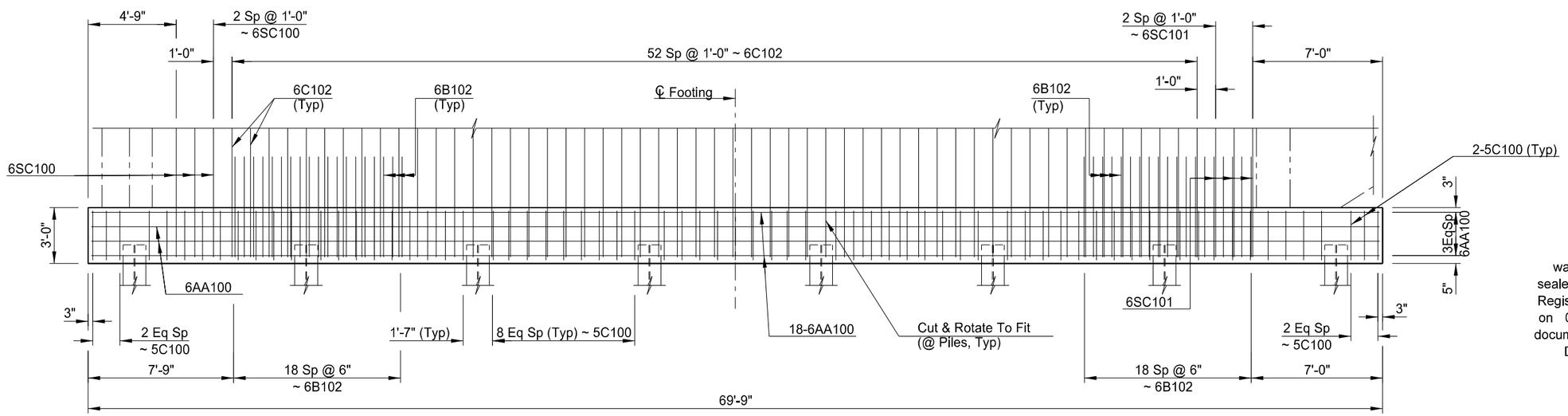

FOOTING ELEVATION

This document was originally issued and sealed by Colin A. Moran, Registration Number PE 5344, on 08/15/16 and the original document is stored at the North Dakota Department of Transportation

QUANTITIES

SEE DWG 20-103.403-18

BNSF RAILWAY
1 MILE NORTH OF US 2

BNSF Ry. Br.0033-0085.600

ABUTMENT 1 FOOTING DETAILS
(Showing Reinforcing)

STATE	PROJECT NUMBER	SECTION NO.	SHEET NO.
ND	NHU-3-020(074)103	170	34

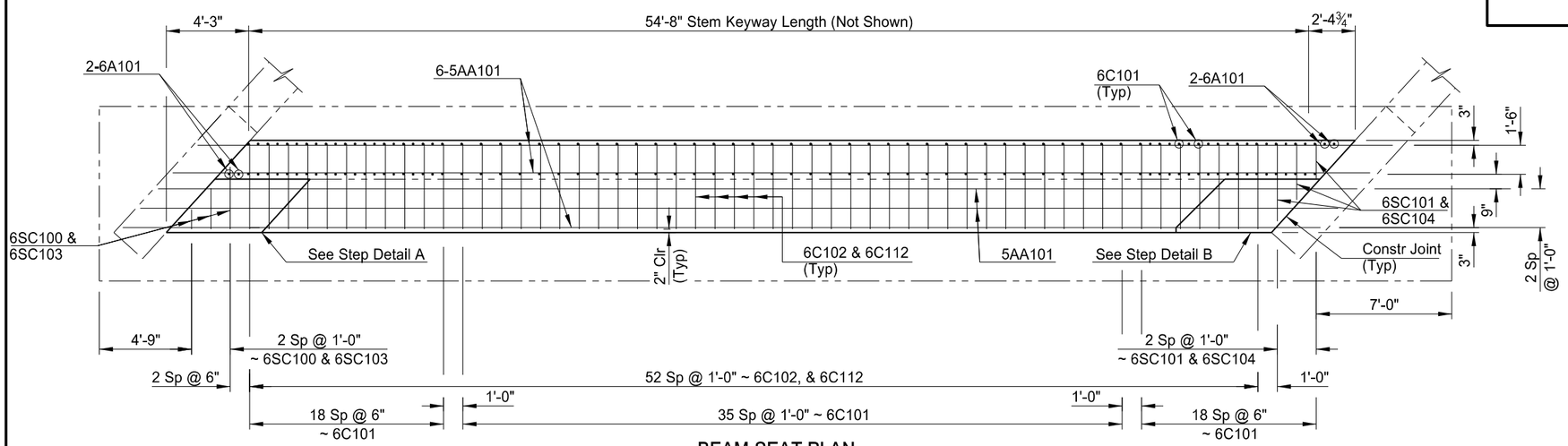

BEAM SEAT PLAN

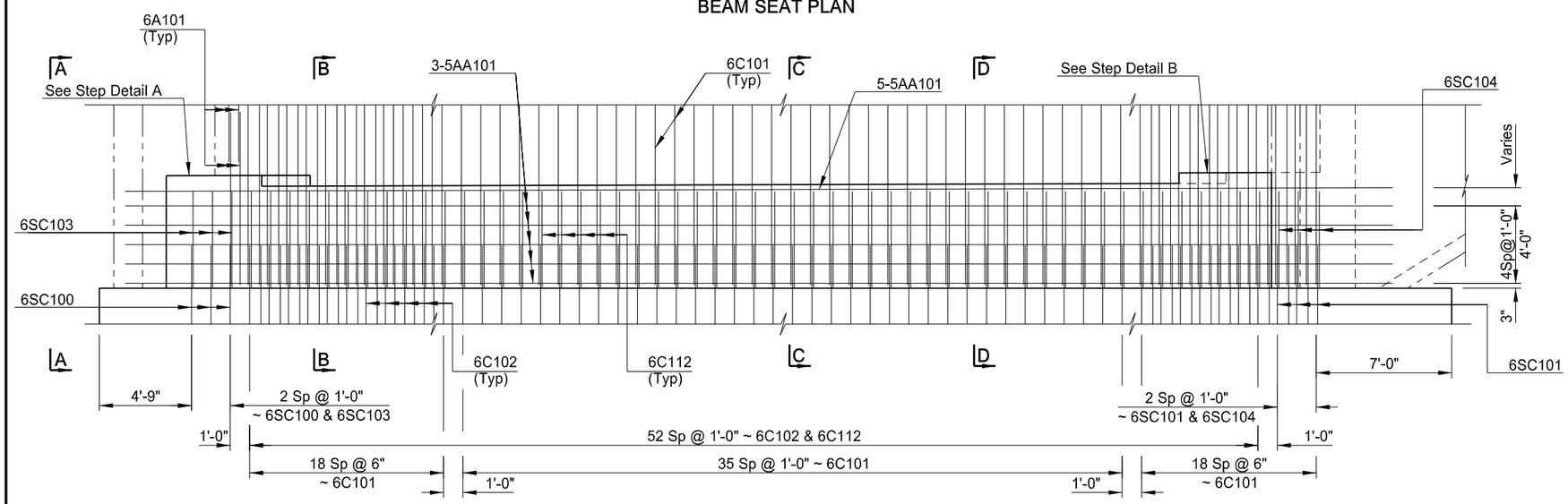

BEAM SEAT ELEVATION

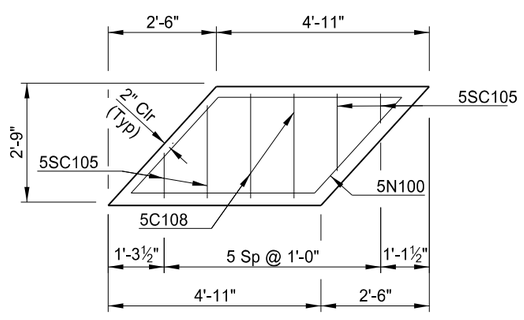

STEP DETAIL A

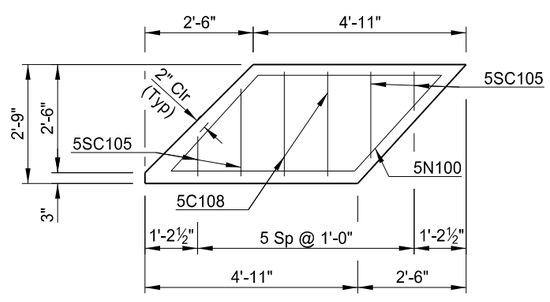

STEP DETAIL B

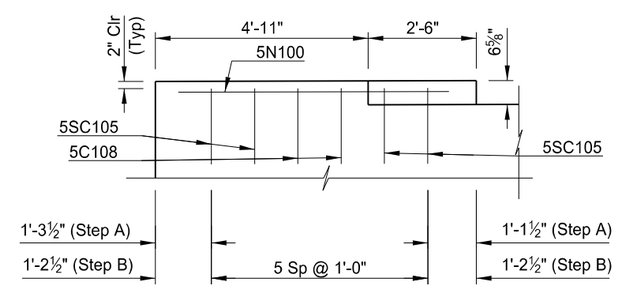

STEP ELEVATION

NOTES:

1. See Dwg 20-103.403-18 for Cross Sections A-A, B-B, C-C & D-D.
2. Wingwall reinforcing omitted for clarity.
3. Drill or cast 2"x2'-0" holes prior to setting the fascia girder. See Dwg 20-103.403-36 for details.

This document was originally issued and sealed by Colin A. Moran, Registration Number PE 5344, on 08/15/16 and the original document is stored at the North Dakota Department of Transportation

QUANTITIES
SEE DWG 20-103.403-18

BNSF RAILWAY
1 MILE NORTH OF US 2

BNSF Ry. Br.0033-0085.600

ABUTMENT 1 BEAM SEAT DETAILS
(Showing Reinforcing)

STATE	PROJECT NUMBER	SECTION NO.	SHEET NO.
ND	NHU-3-020(074)103	170	35

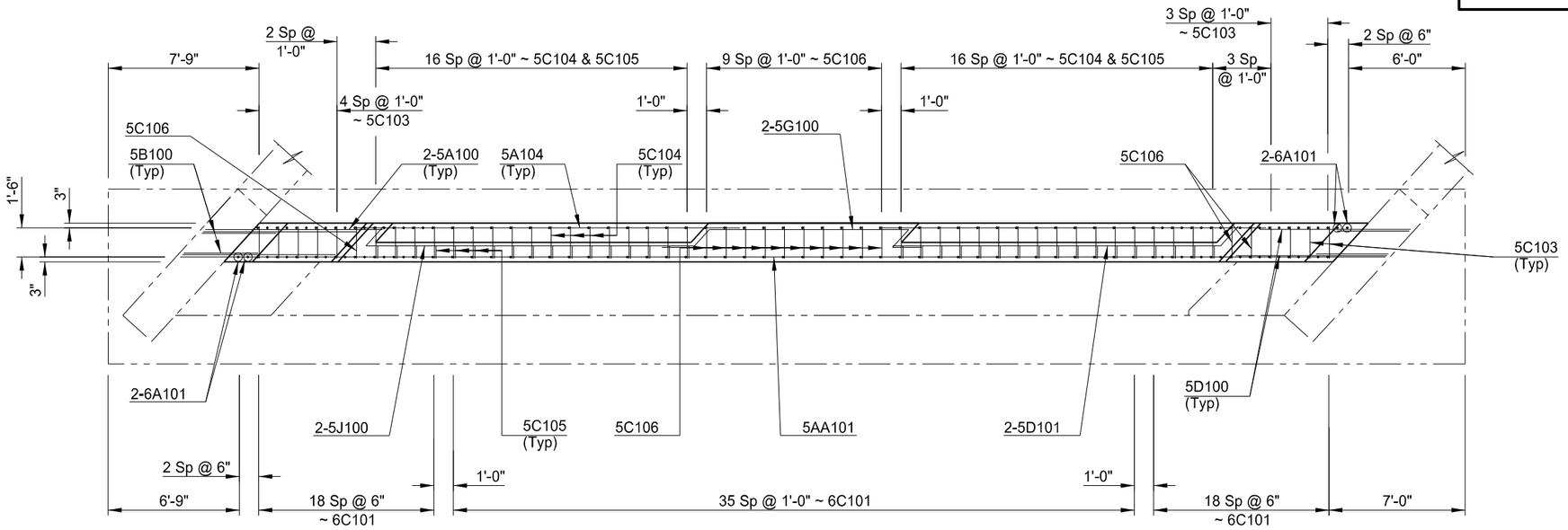

STEM PLAN

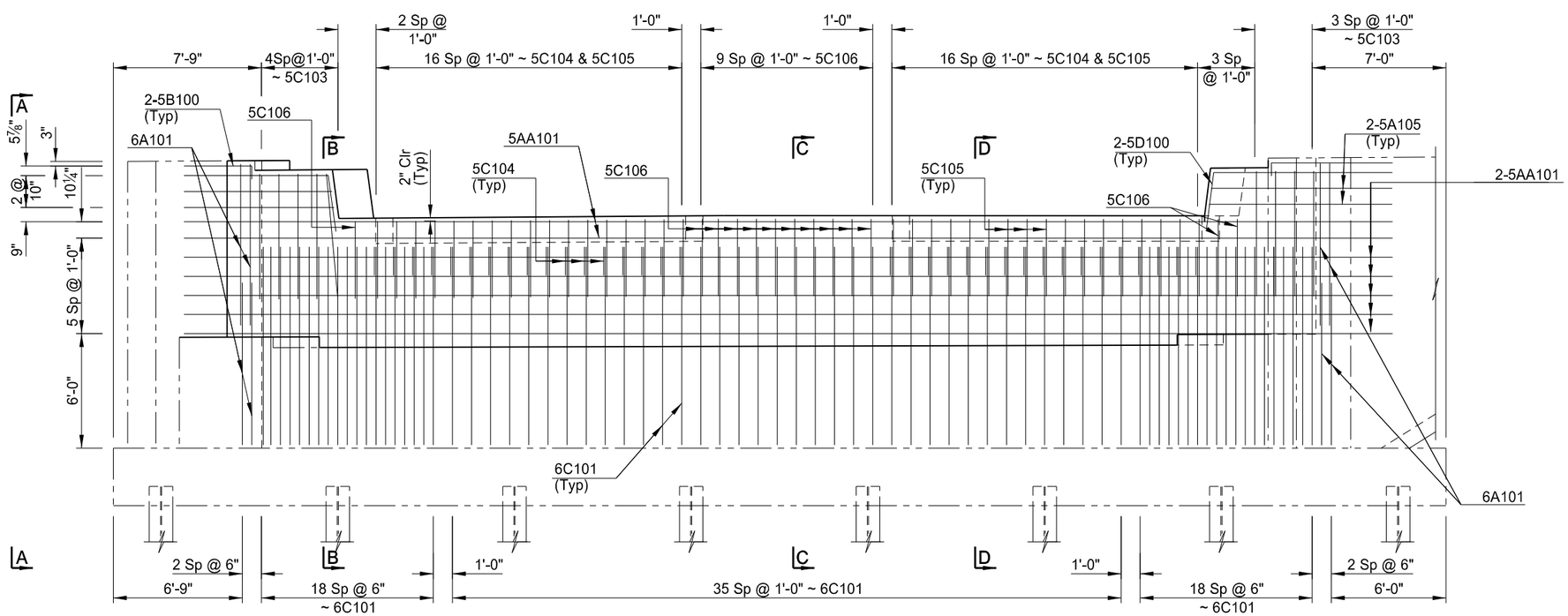

STEM ELEVATION

NOTES:

1. See Dwg 20-103.403-18 for Cross Sections A-A, B-B, C-C & D-D.
2. Wingwall reinforcing omitted for clarity.

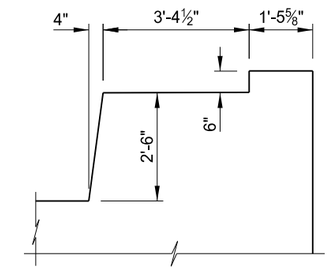

TYPICAL CURB SECTION
(Wingwall Omitted)

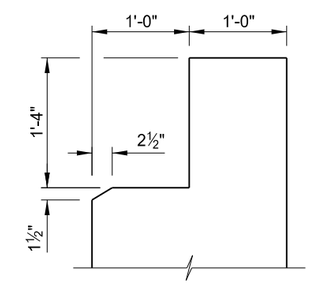

APPROACH LIP DETAIL

This document was originally issued and sealed by Colin A. Moran, Registration Number PE 5344, on 08/15/16 and the original document is stored at the North Dakota Department of Transportation

QUANTITIES
SEE DWG 20-103.403-18

BNSF RAILWAY
1 MILE NORTH OF US 2

BNSF Ry. Br.0033-0085.600

ABUTMENT 1 STEM DETAILS
(Showing Reinforcing)

STATE	PROJECT NUMBER	SECTION NO.	SHEET NO.
ND	NHU-3-020(074)103	170	36

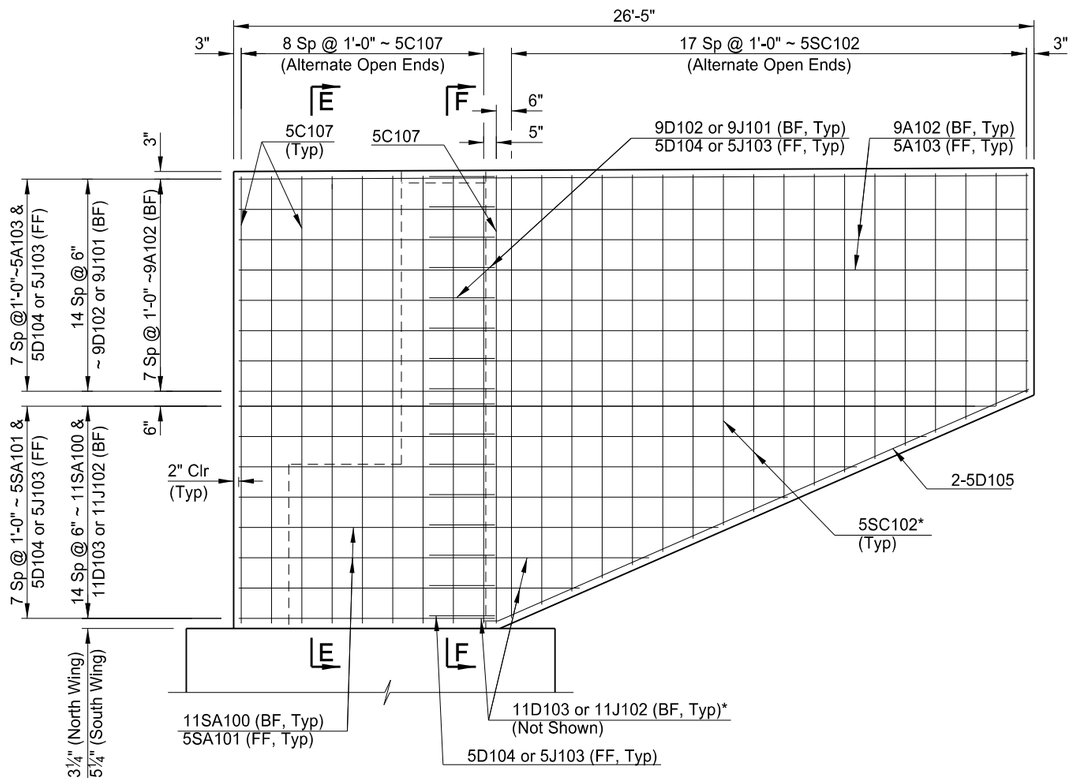

WINGWALL ELEVATION
(South Wing, Front Face Shown)

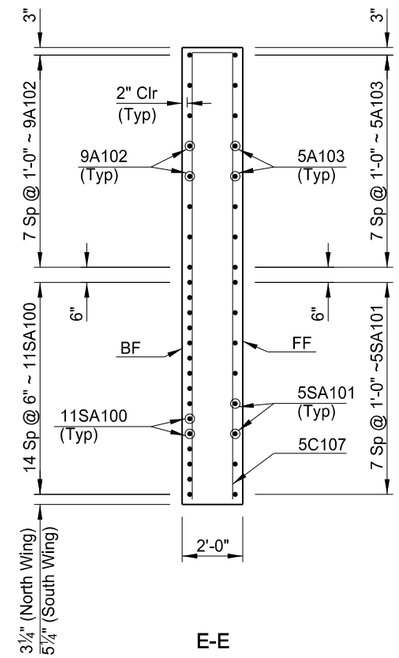

E-E

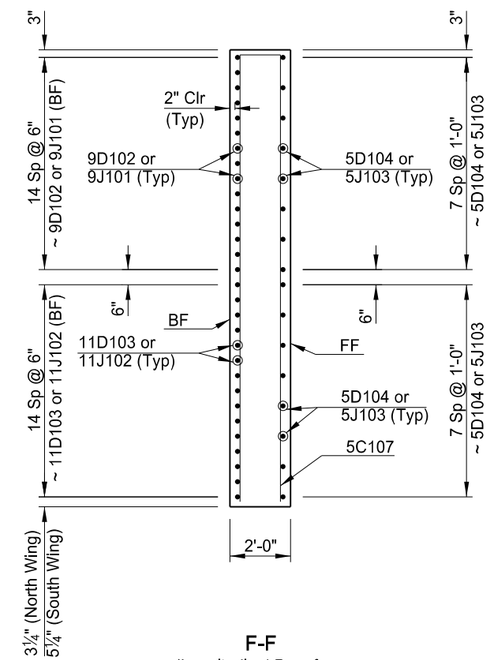

F-F
(Longitudinal Bars from
E-E Omitted for Clarity)

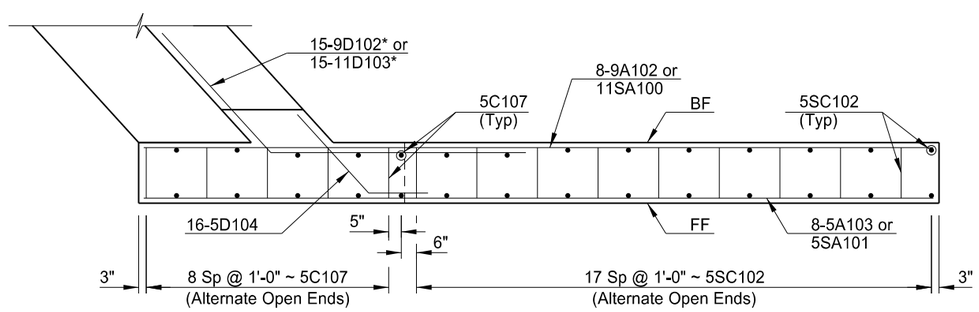

WINGWALL PLAN
(South Wing Shown)

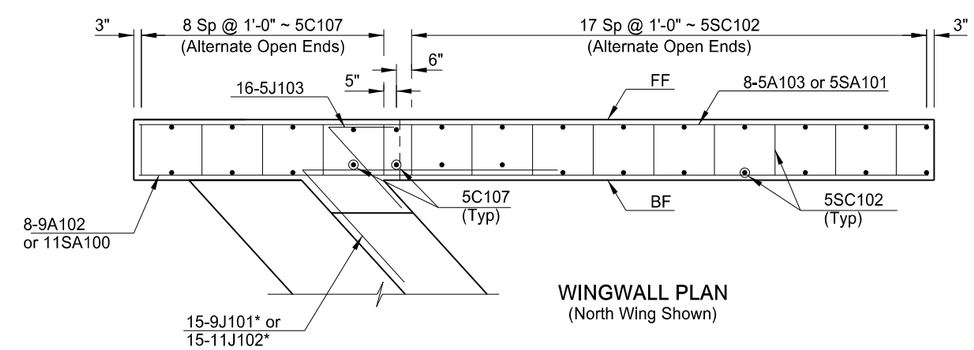

WINGWALL PLAN
(North Wing Shown)

NOTES:

1. Abutment 1 wingwalls shown. Abutment 4 south wingwall is similar to Abutment 1 north wingwall. See Dwg. 20-103.403-17 for Abutment 4 north wingwall.
2. FF = Front Face, BF = Back Face, * = Trim to Fit
3. For bars 5D104, 5J103, 9D102, 11D103, 9J101 & 11J102, set the "c" detailing dimension into the wing.

This document was originally issued and sealed by Colin A. Moran, Registration Number PE 5344, on 08/26/16 and the original document is stored at the North Dakota Department of Transportation

QUANTITIES

SEE DWG 20-103.403-18

BNSF RAILWAY
1 MILE NORTH OF US 2

BNSF Ry. Br.0033-0085.600

ABUTMENT WINGWALL DETAILS
(Showing Reinforcing)

STATE	PROJECT NUMBER	SECTION NO.	SHEET NO.
ND	NHU-3-020(074)103	170	37

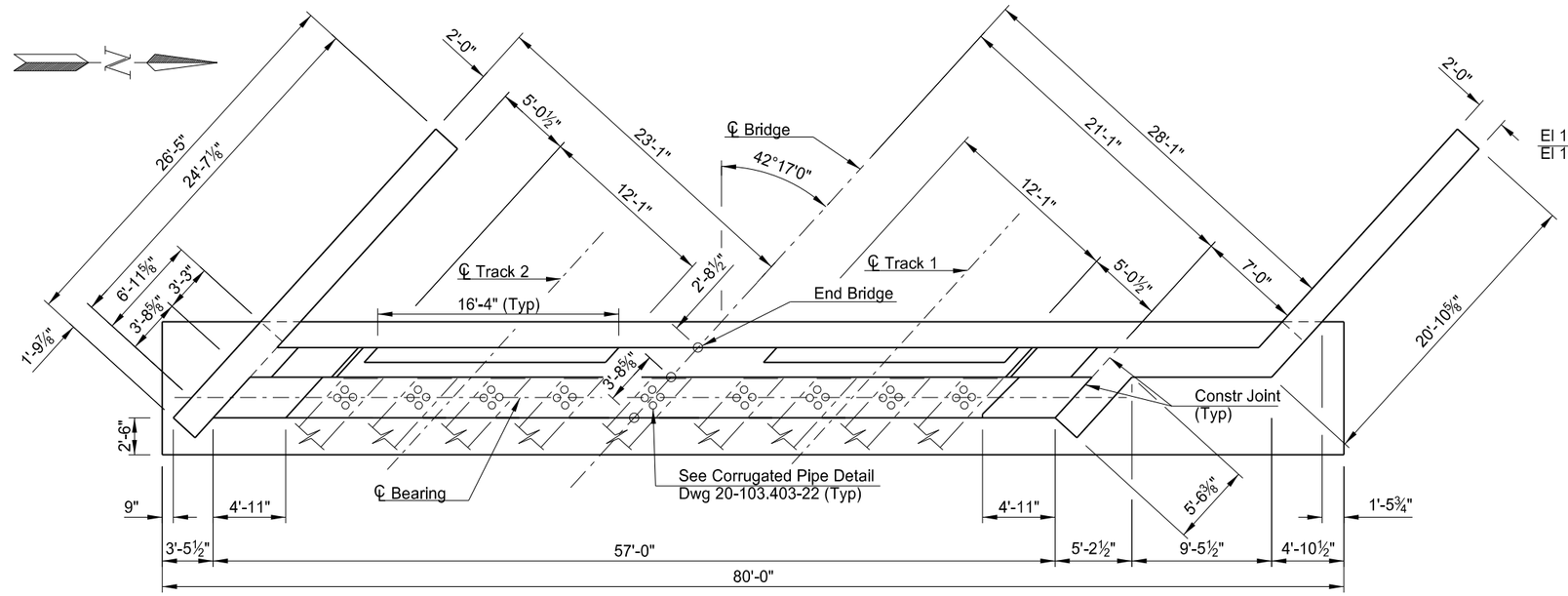

PLAN

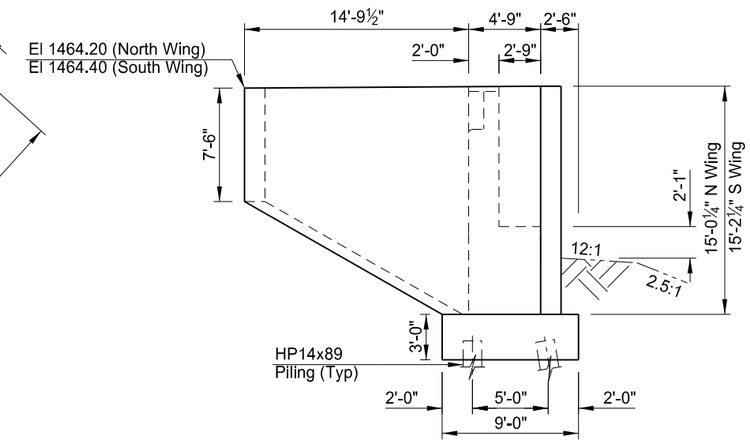

WING WALL ELEVATION
(See Dwg 20-103.403-18 for Skewed Dimensions)

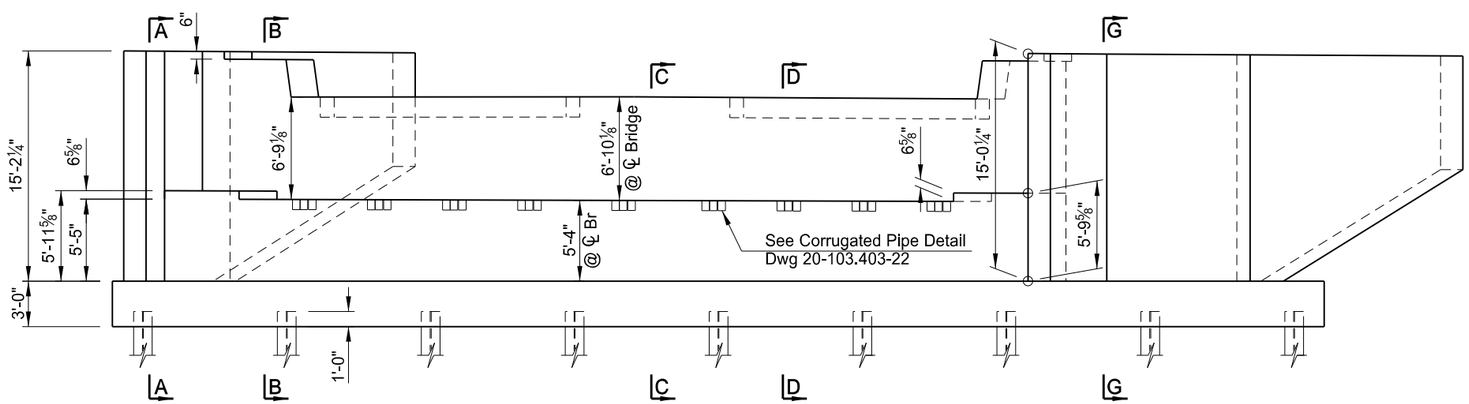

ELEVATION

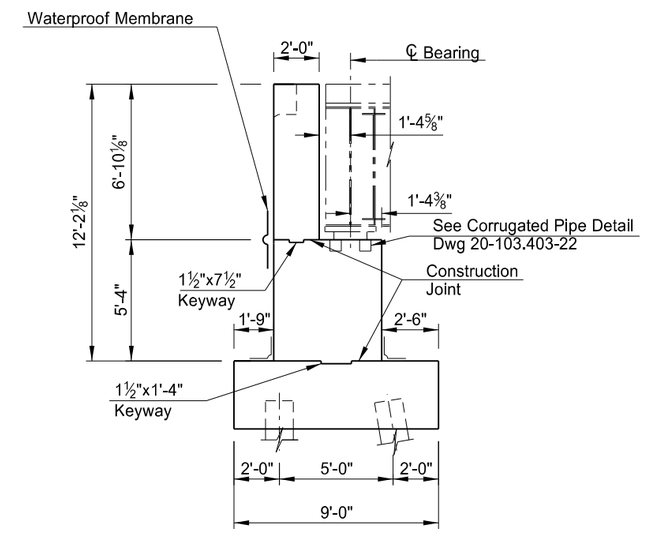

SECTION AT ℄ BRIDGE

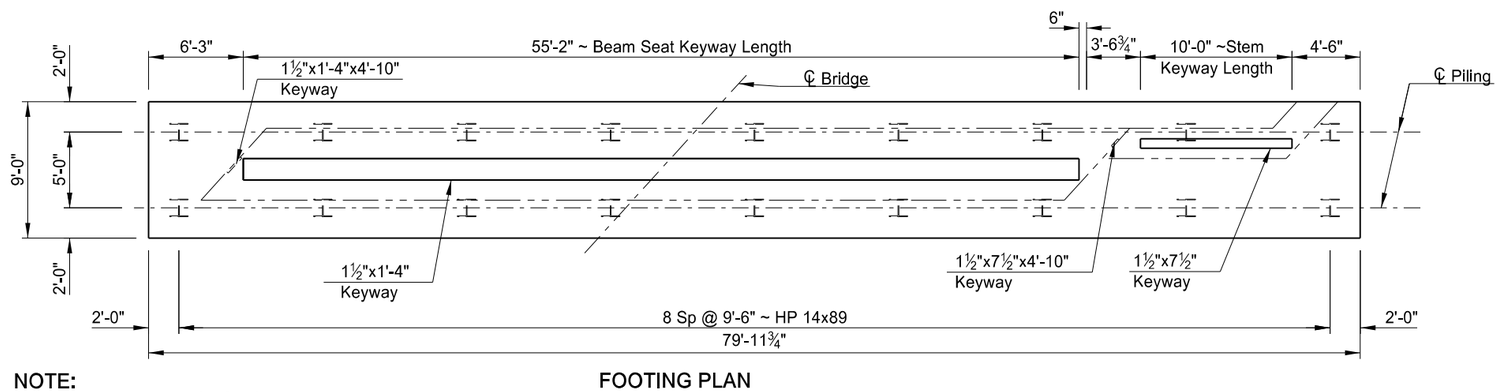

FOOTING PLAN
(Wingwalls Omitted)

NOTE:
See Dwg 20-103.403-18 for Sections
A-A, B-B, C-C, D-D and G-G.

This document was originally issued and sealed by Colin A. Moran, Registration Number PE 5344, on 08/15/16 and the original document is stored at the North Dakota Department of Transportation

QUANTITIES

SEE DWG 20-103.403-18

BNSF RAILWAY
1 MILE NORTH OF US 2

BNSF Ry. Br.0033-0085.600

ABUTMENT 4 DETAILS

STATE	PROJECT NUMBER	SECTION NO.	SHEET NO.
ND	NHU-3-020(074)103	170	38

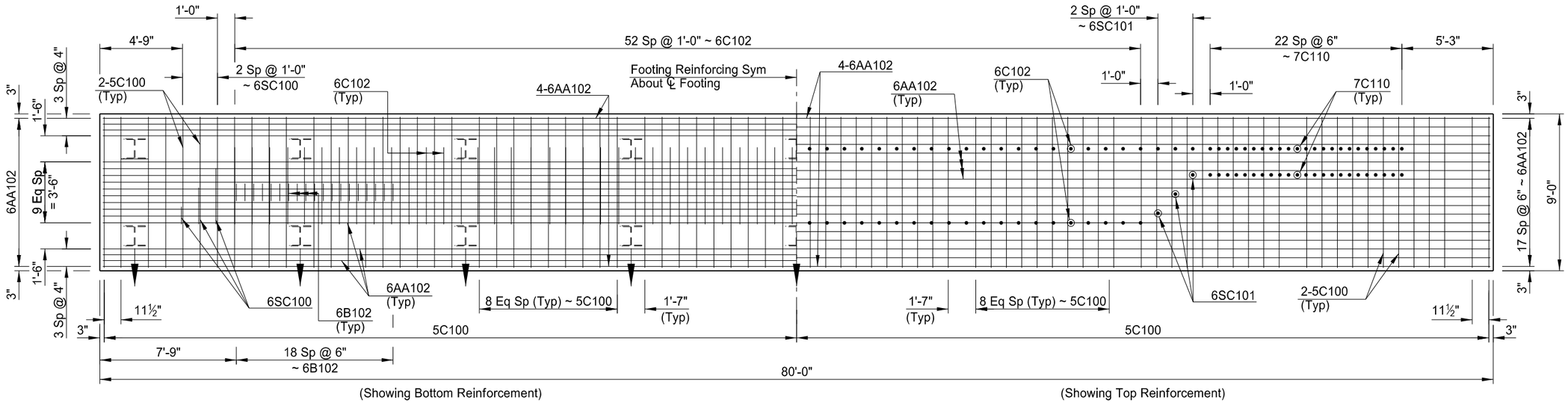

FOOTING PLAN

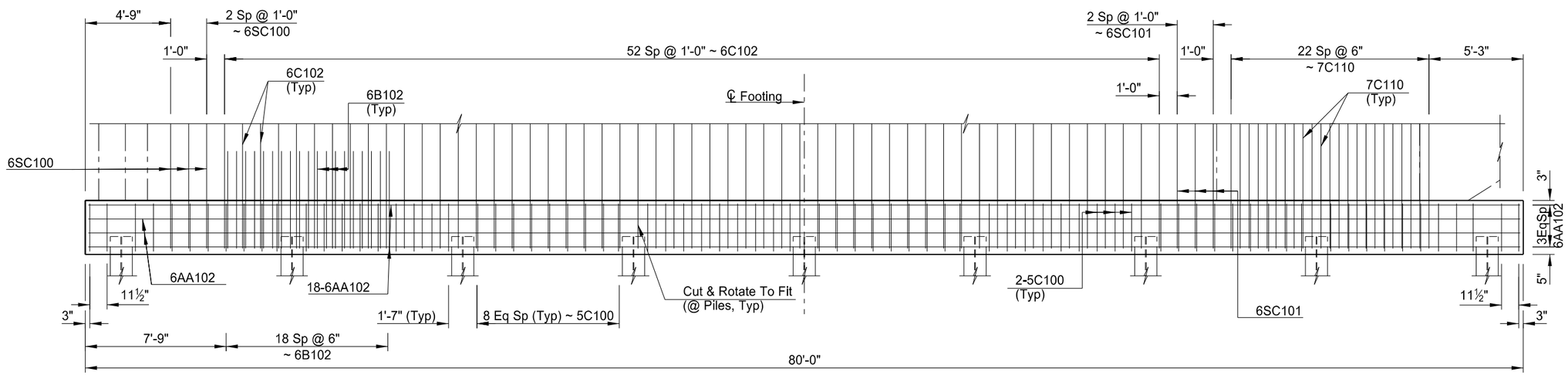

FOOTING ELEVATION

This document was originally issued and sealed by Colin A. Moran, Registration Number PE 5344, on 08/15/16 and the original document is stored at the North Dakota Department of Transportation

QUANTITIES

SEE DWG 20-103.403-18

BNSF RAILWAY
1 MILE NORTH OF US 2

BNSF Ry. Br.0033-0085.600

ABUTMENT 4 FOOTING DETAILS (Showing Reinforcing)

STATE	PROJECT NUMBER	SECTION NO.	SHEET NO.
ND	NHU-3-020(074)103	170	39

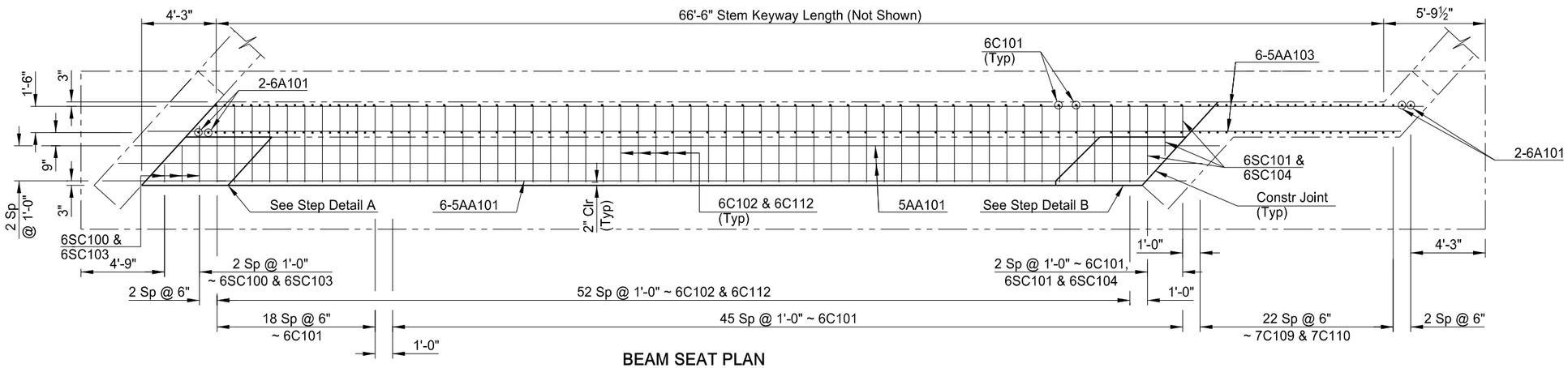

BEAM SEAT PLAN

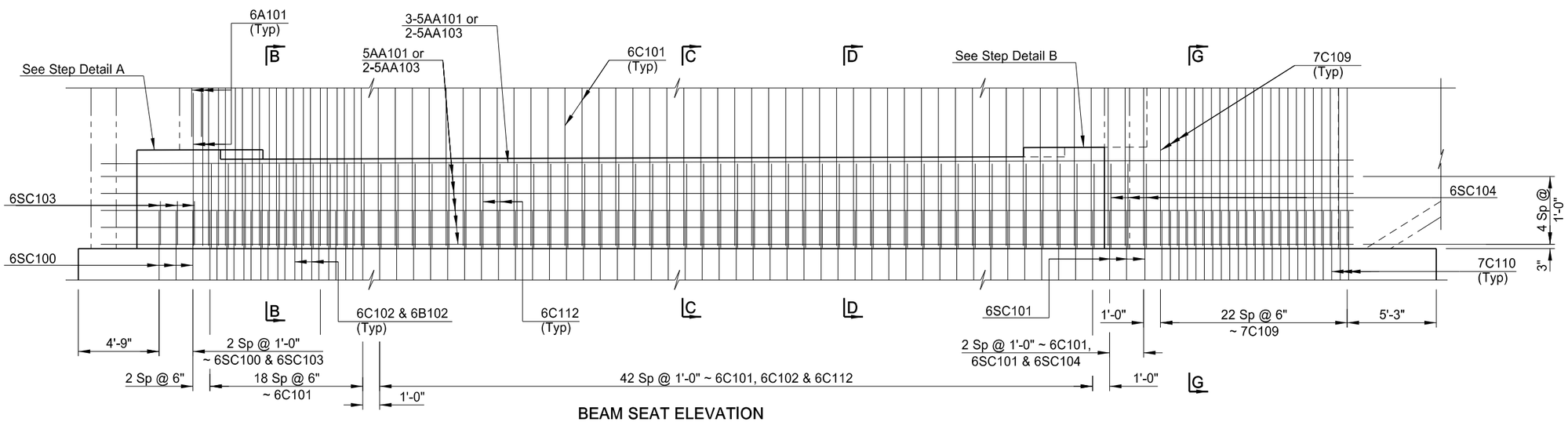

BEAM SEAT ELEVATION

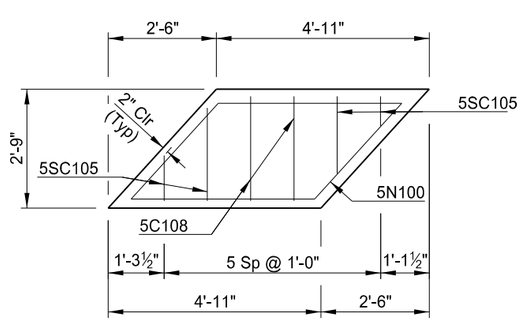

STEP DETAIL A

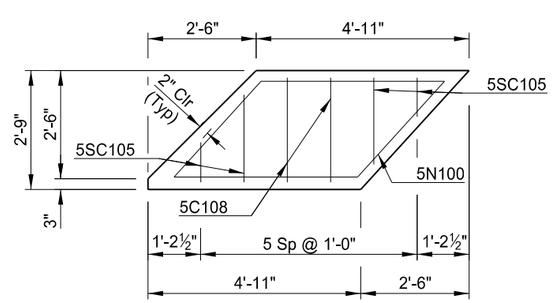

STEP DETAIL B

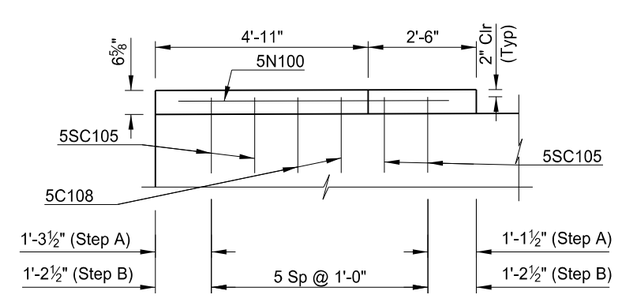

STEP ELEVATION

NOTES:

1. See Dwg 20-103.403-18 for Cross Sections A-A, B-B, C-C, D-D and G-G.
2. Wingwall reinforcing omitted for clarity.
3. Drill or cast 2"x2'-0" holes prior to setting the fascia girder. See Dwg 20-103.403-36 for details.

This document was originally issued and sealed by Colin A. Moran, Registration Number PE 5344, on 08/15/16 and the original document is stored at the North Dakota Department of Transportation

QUANTITIES

SEE DWG 20-103.403-18

BNSF RAILWAY
1 MILE NORTH OF US 2

BNSF Ry. Br.0033-0085.600

ABUTMENT 4 BEAM SEAT DETAILS (Showing Reinforcing)

STATE	PROJECT NUMBER	SECTION NO.	SHEET NO.
ND	NHU-3-020(074)103	170	40

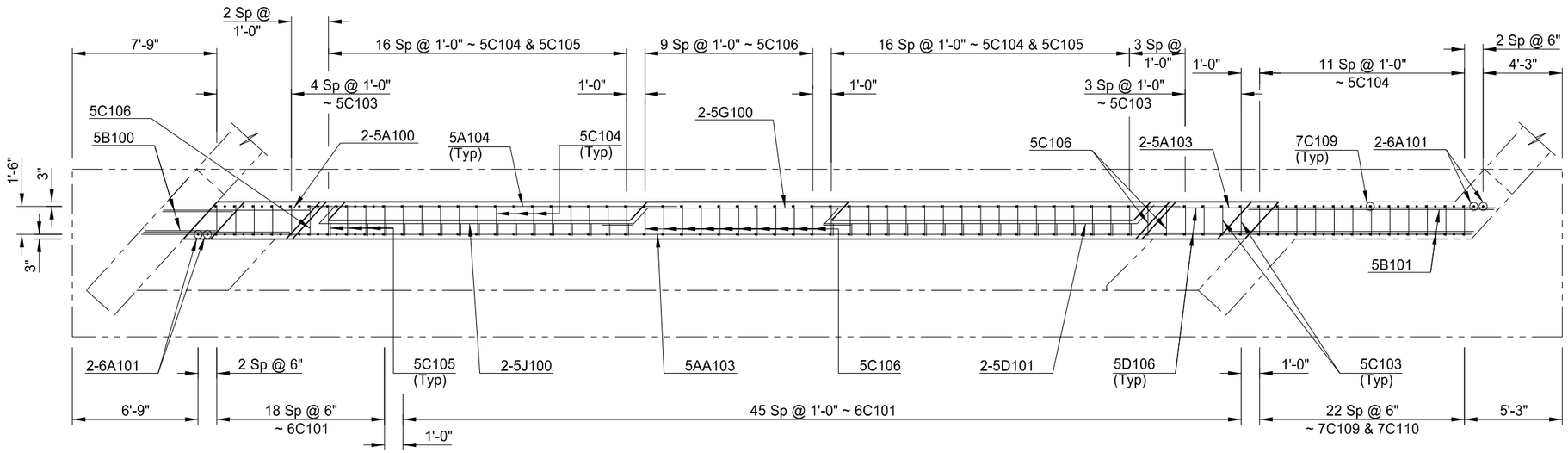

STEM PLAN

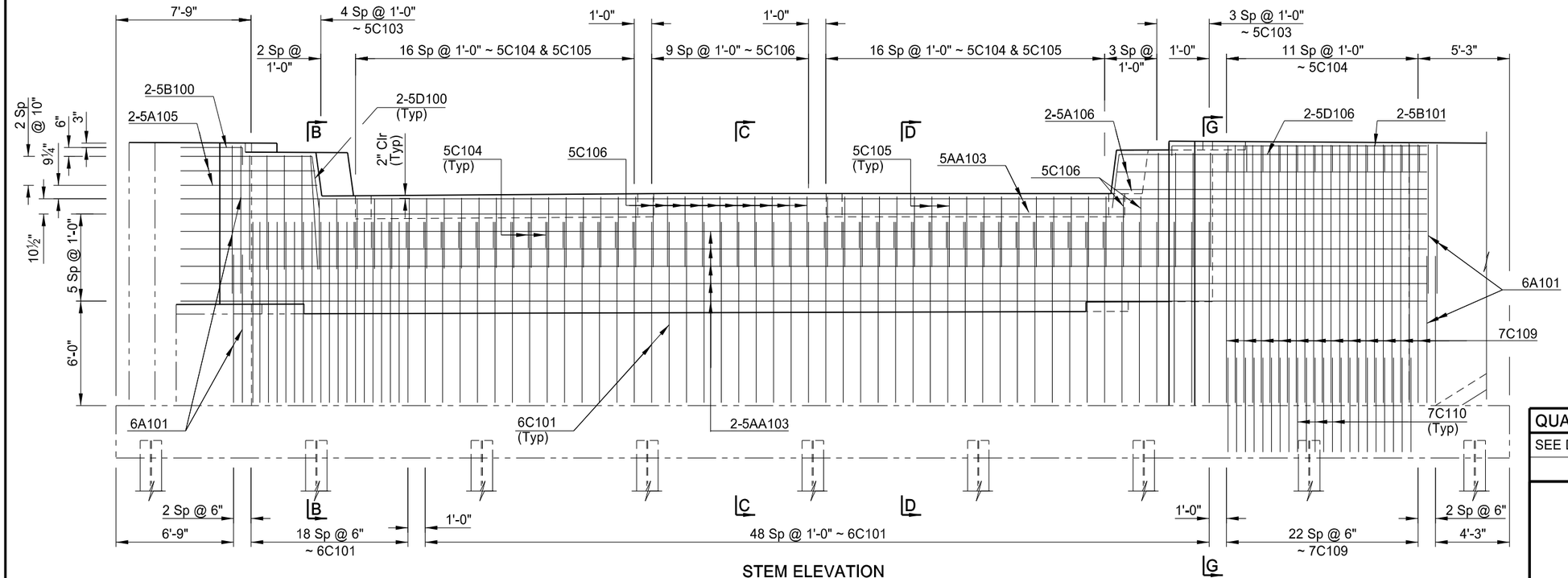

STEM ELEVATION

NOTES:

1. See Dwg 20-103.403-18 for Cross Sections A-A, B-B, C-C, D-D and G-G.
2. Wingwall reinforcing omitted for clarity.

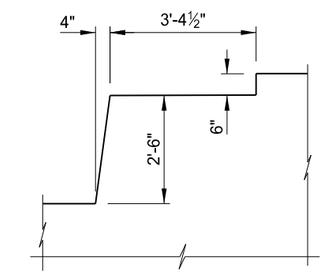

TYPICAL CURB SECTION

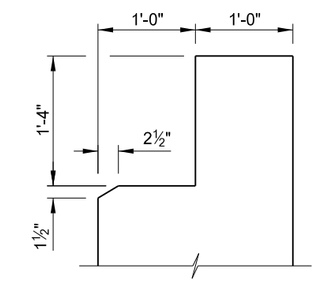

APPROACH LIP DETAIL

This document was originally issued and sealed by Colin A. Moran, Registration Number PE 5344, on 08/15/16 and the original document is stored at the North Dakota Department of Transportation

QUANTITIES
SEE DWG 20-103.403-18

BNSF RAILWAY
1 MILE NORTH OF US 2

BNSF Ry. Br.0033-0085.600

ABUTMENT 4 STEM DETAILS (Showing Reinforcing)

STATE	PROJECT NUMBER	SECTION NO.	SHEET NO.
ND	NHU-3-020(074)103	170	41

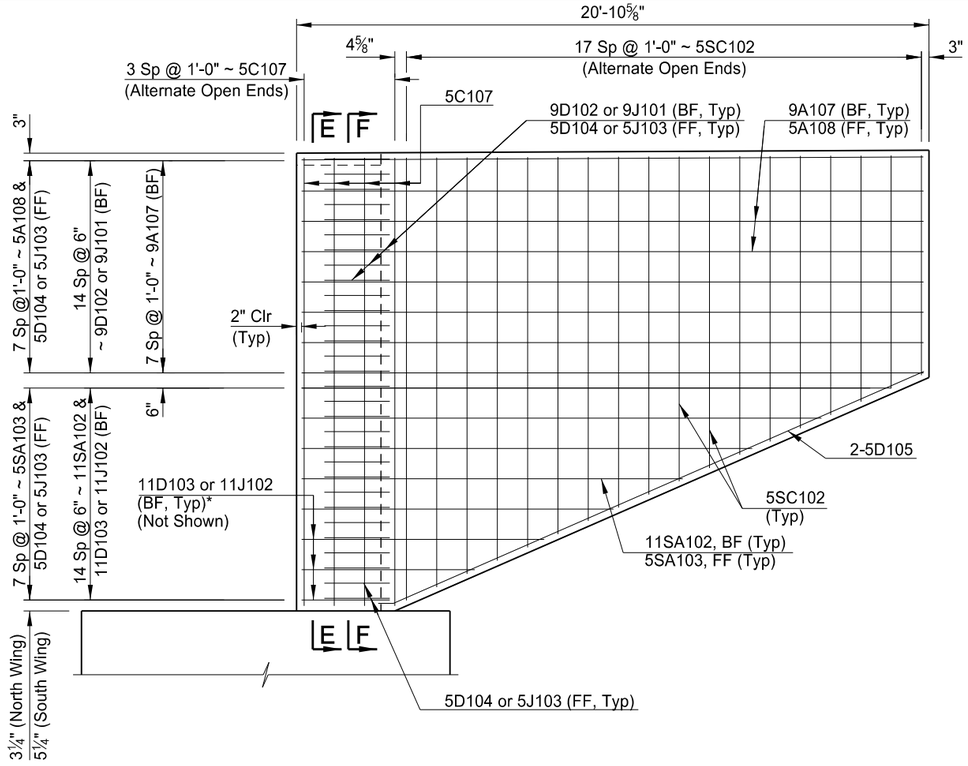

WINGWALL ELEVATION
(North Wing, Front Face Shown)

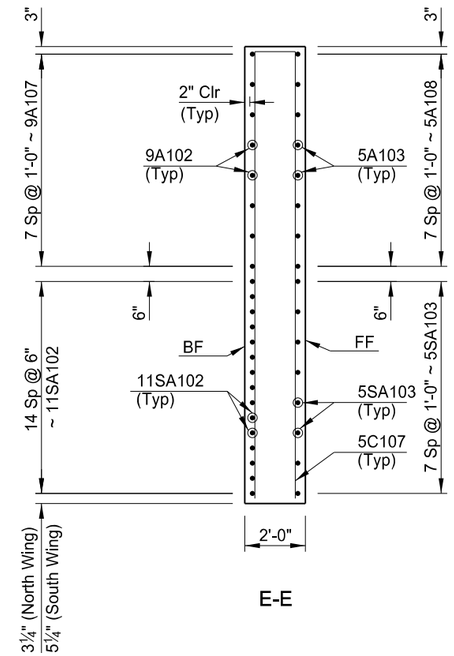

E-E

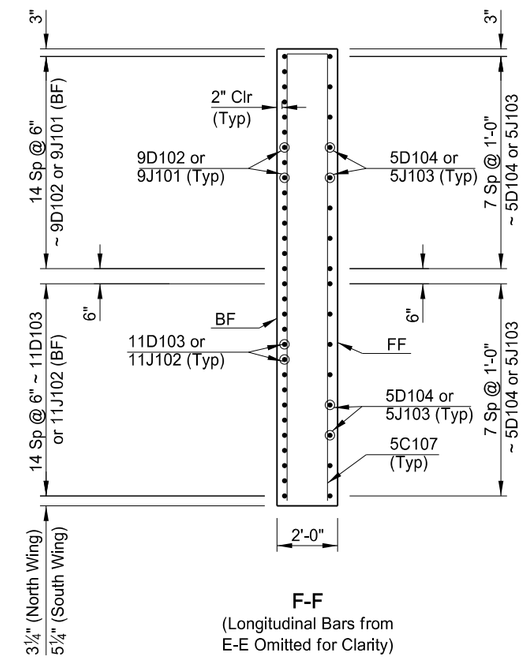

F-F
(Longitudinal Bars from E-E Omitted for Clarity)

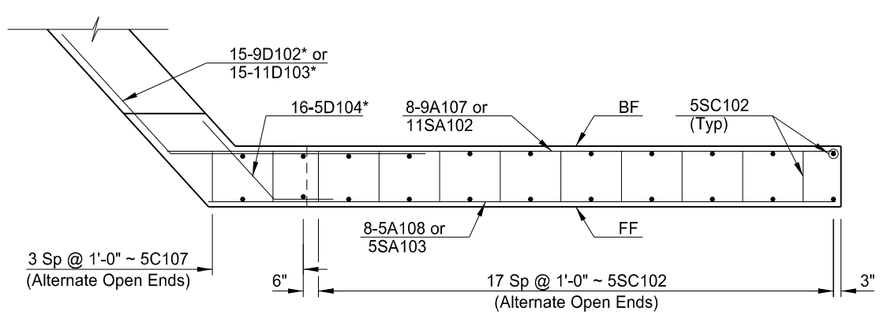

WINGWALL PLAN
(North Wing Shown)

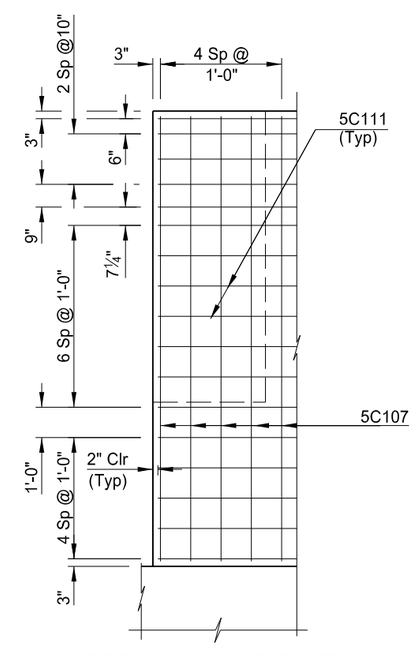

SHORT WINGWALL ELEVATION

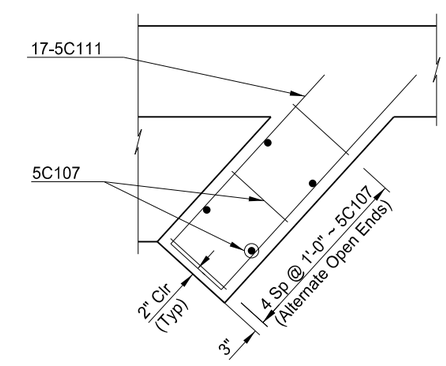

SHORT WINGWALL PLAN

NOTES:

1. FF = Front Face, BF = Back Face, * = Trim to Fit
2. For bars 5D104, 5J103, 9D102, 11D103, 9J101 & 11J102, set the "c" detailing dimension into the wing.

This document was originally issued and sealed by Colin A. Moran, Registration Number PE 5344, on 08/15/16 and the original document is stored at the North Dakota Department of Transportation

QUANTITIES

SEE DWG 20-103.403-18

BNSF RAILWAY
1 MILE NORTH OF US 2

BNSF Ry. Br.0033-0085.600

ABUTMENT 4 NORTH WINGWALL DETAILS
(Showing Reinforcing)

STATE	PROJECT NUMBER	SECTION NO.	SHEET NO.
ND	NHU-3-020(074)103	170	42

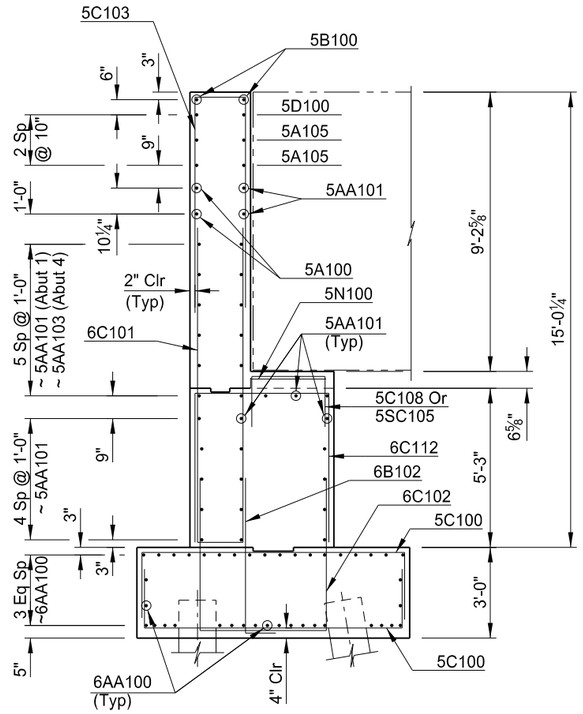

A-A
(Wingwall Omitted)

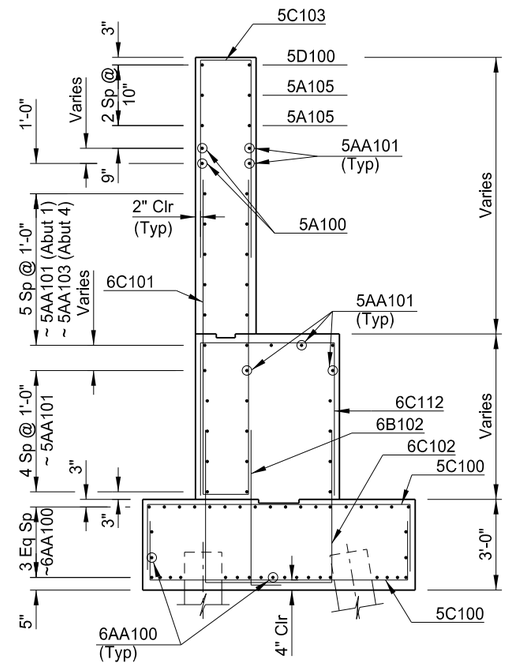

B-B

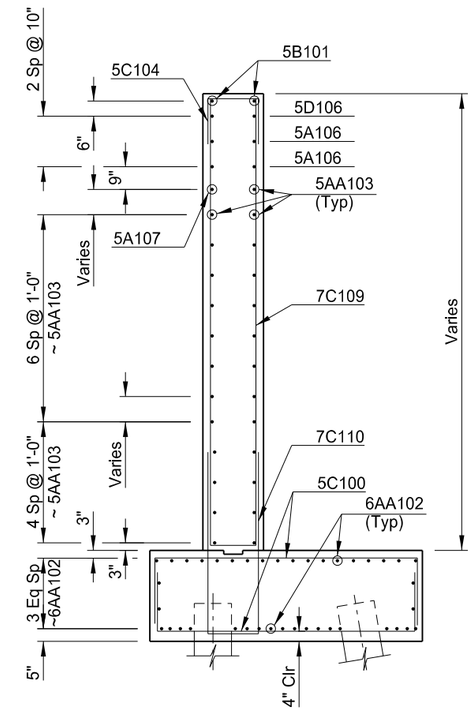

G-G
(Abutment 4 Only)

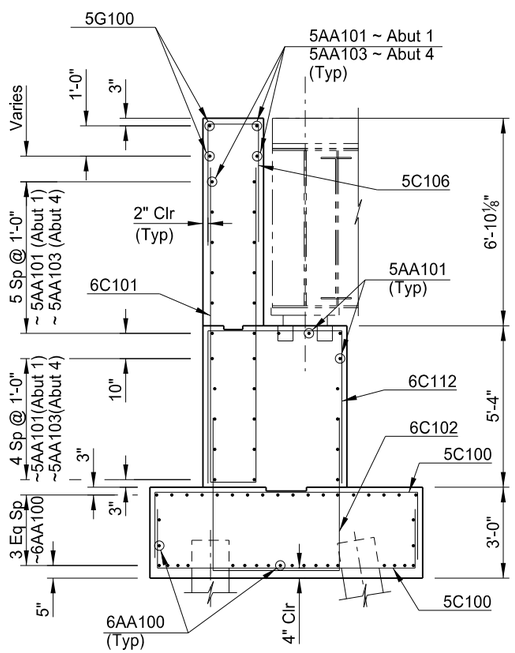

C-C
(At Bridge ℄)

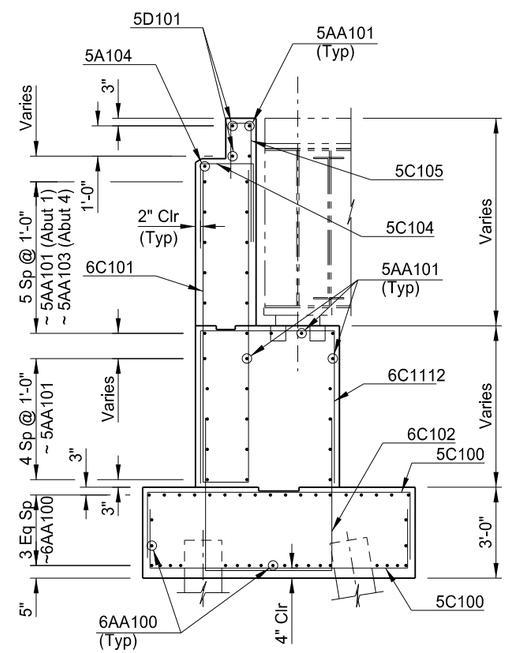

D-D

This document was originally issued and sealed by Colin A. Moran, Registration Number PE 5344, on 08/15/16 and the original document is stored at the North Dakota Department of Transportation

QUANTITIES	(ABUTMENT 1)
CLASS AAE-3 CONCRETE	202.3 CY
REINFORCING STEEL GRADE 60	25,369 LBS

QUANTITIES	(ABUTMENT 4)
CLASS AAE-3 CONCRETE	224.1 CY
REINFORCING STEEL GRADE 60	27,765 LBS

BNSF RAILWAY
1 MILE NORTH OF US 2

BNSF Ry. Br.0033-0085.600

ABUTMENT DETAILS
(Showing Reinforcing)

STATE	PROJECT NUMBER	SECTION NO.	SHEET NO.
ND	NHU-3-020(074)103	170	43

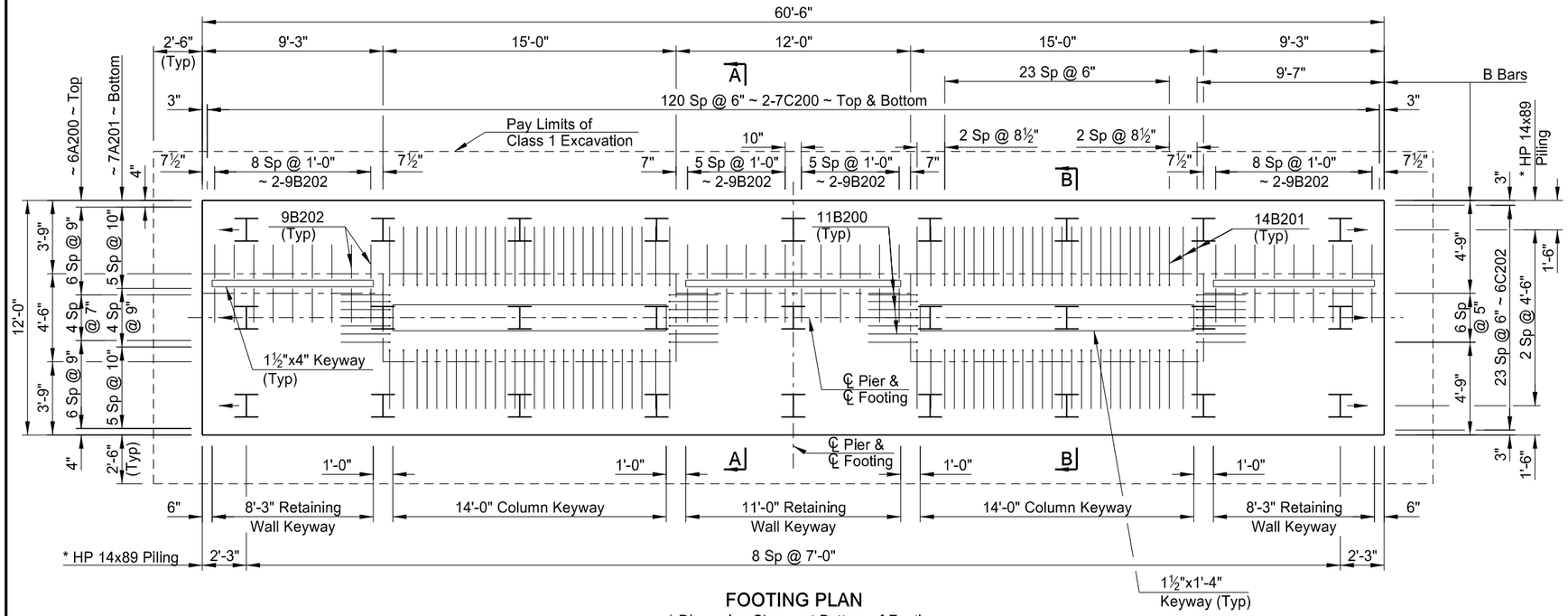

FOOTING PLAN

* Dimension Shown at Bottom of Footing

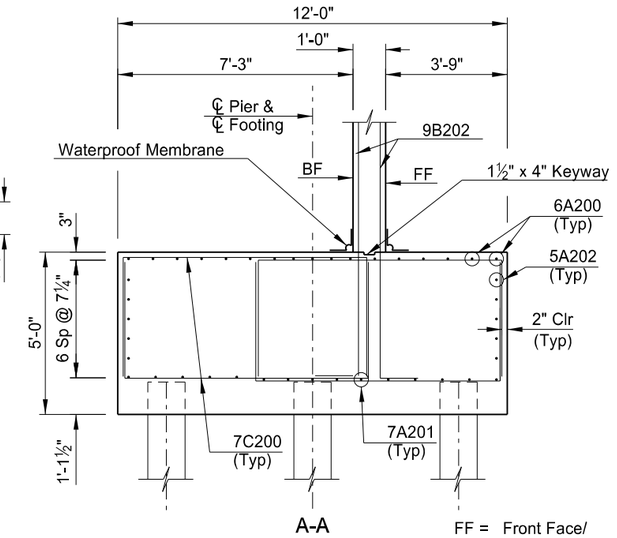

A-A

FF = Front Face/ Roadway Face
BF = Back Face

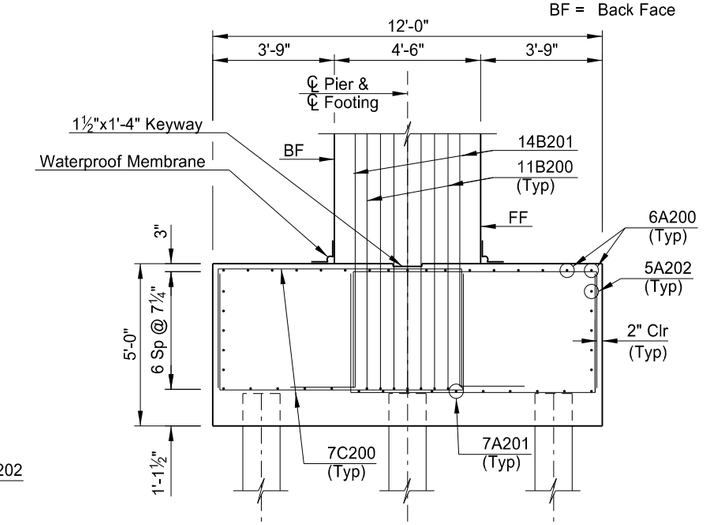

B-B

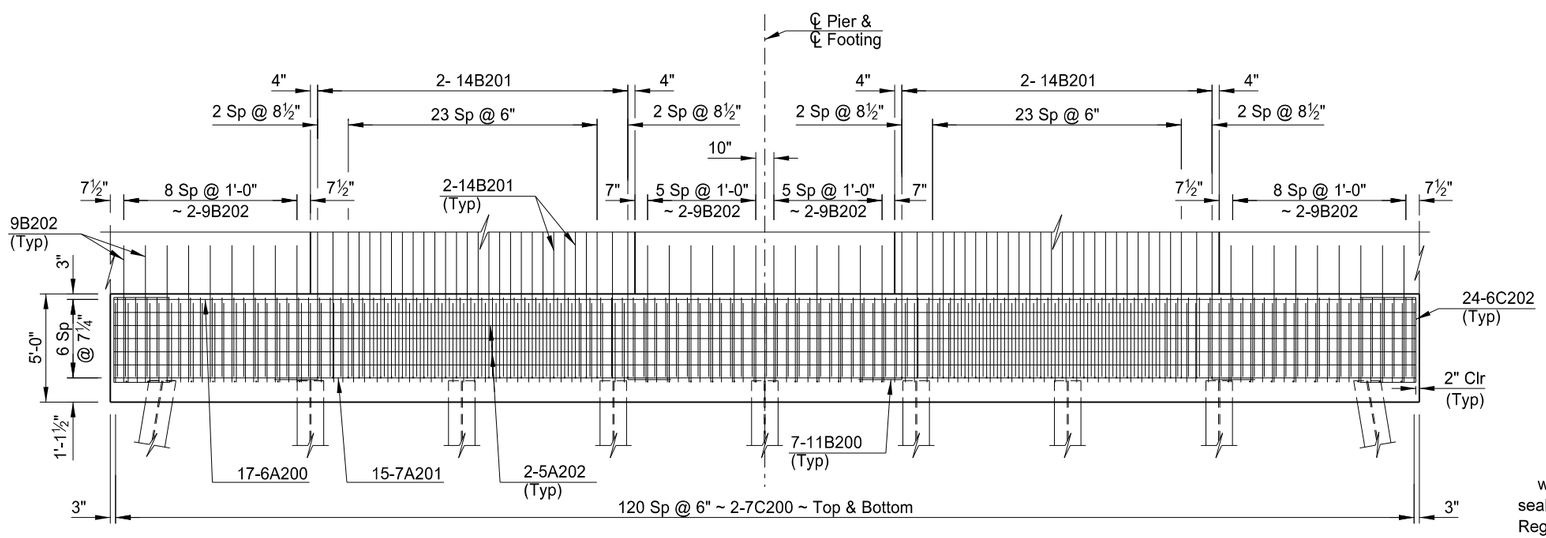

ELEVATION

NOTE:
Arrow indicates direction of pile batter.
Pile batter is 2:12 at locations shown.

This document was originally issued and sealed by Colin A. Moran, Registration Number PE 5344, on 08/15/16 and the original document is stored at the North Dakota Department of Transportation

QUANTITIES

SEE DWG 20-103.403-22

BNSF RAILWAY
1 MILE NORTH OF US 2

BNSF Ry. Br.0033-0085.600

PIER FOOTING DETAILS

STATE	PROJECT NUMBER	SECTION NO.	SHEET NO.
ND	NHU-3-020(074)103	170	44

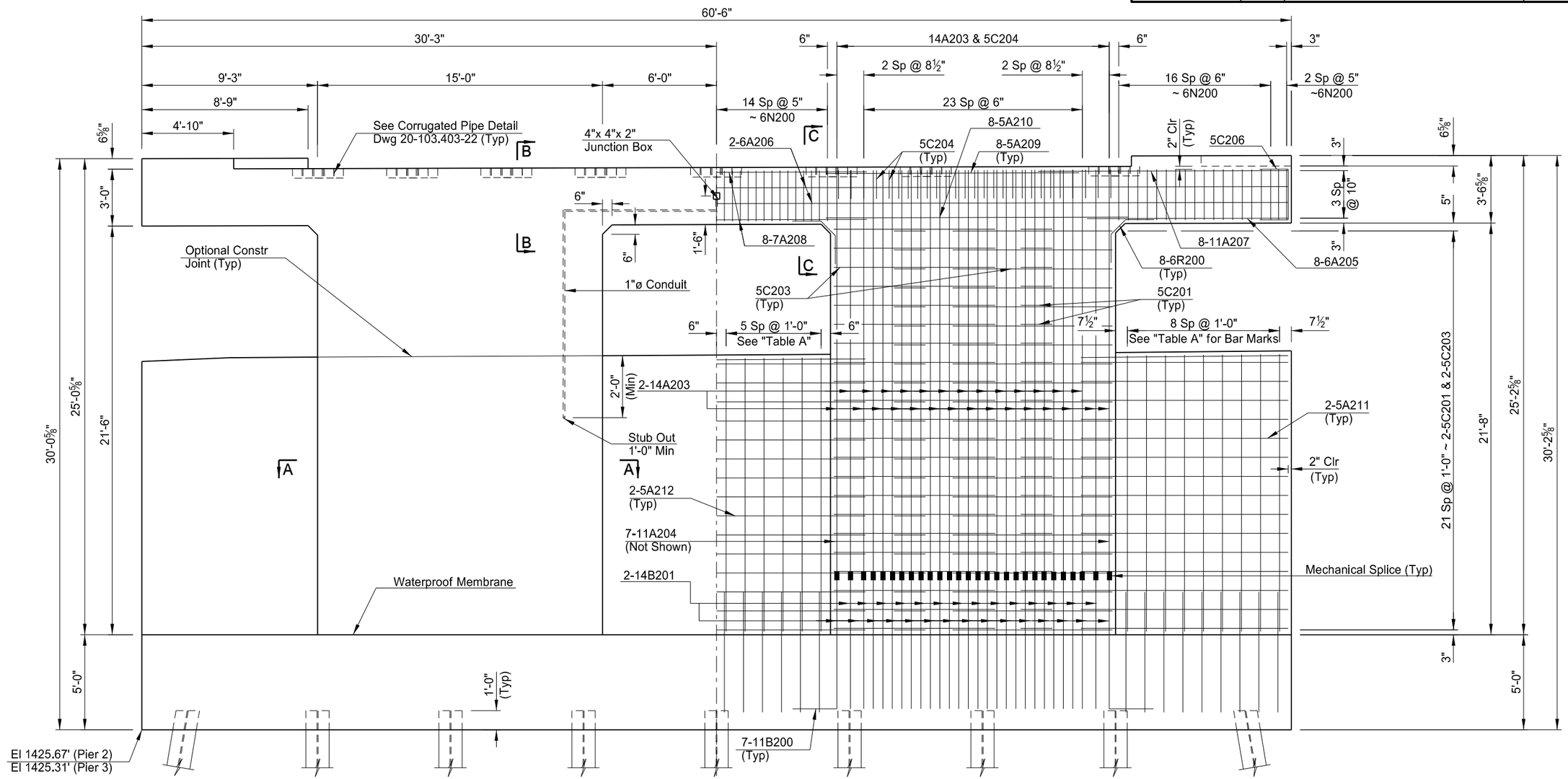

(Half Showing Dimensions)

(Half Showing Reinforcing)

PIER 2 ELEVATION

(Pier 3 Similar)

NOTES:

1. See Dwg 20-103.403-21 for Sections A-A, B-B & C-C.
2. Fascia beam step reinforcing omitted for clarity. See Step Detail on Dwg 20-103.403-22 for details.
3. The mechanical splice will consist of an approved rebar coupler capable of developing 125% of the specified yield strength of the reinforcing steel.
4. See Section 20, Sheets 20-21 & 26-27 for retaining wall elevations.
5. 1"ø Conduit will be in north column for Pier 2 and south column for Pier 3. See Section 140, Sheet 7 for additonal details.
6. See Dwg 20-103.403-45 for Aesthetic Details.

TABLE A

	Front Face	Back Face
Pier 2 North Side	9XSA200	9SA200
Pier 2 Middle	9XA202	9A215
Pier 2 South Side	9XSA201	9SA201
Pier 3 North Side	9XA201	9A214
Pier 3 Middle	9XA200	9A213
Pier 3 South Side	9XSA201	9SA201

This document was originally issued and sealed by Colin A. Moran, Registration Number PE 5344, on 08/15/16 and the original document is stored at the North Dakota Department of Transportation

QUANTITIES

SEE DWG 20-103.403-22

BNSF RAILWAY
1 MILE NORTH OF US 2

BNSF Ry. Br.0033-0085.600

PIER DETAILS

STATE	PROJECT NUMBER	SECTION NO.	SHEET NO.
ND	NHU-3-020(074)103	170	45

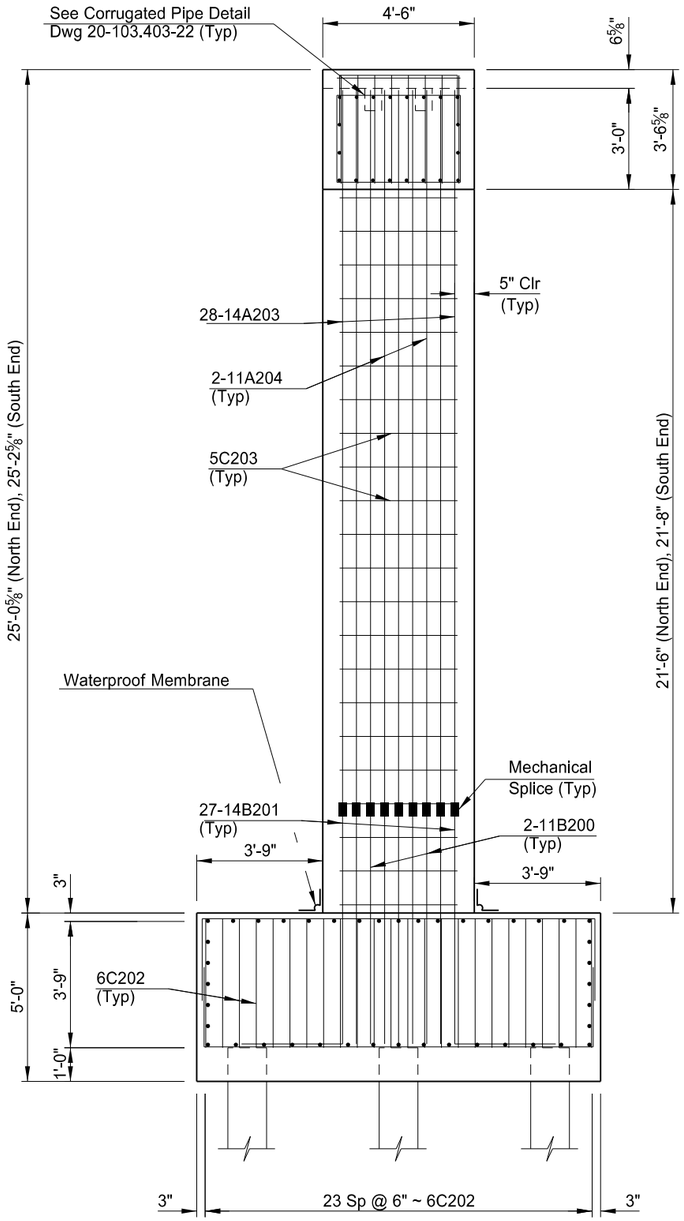

END VIEW

(Retaining Wall Omitted for Clarity)

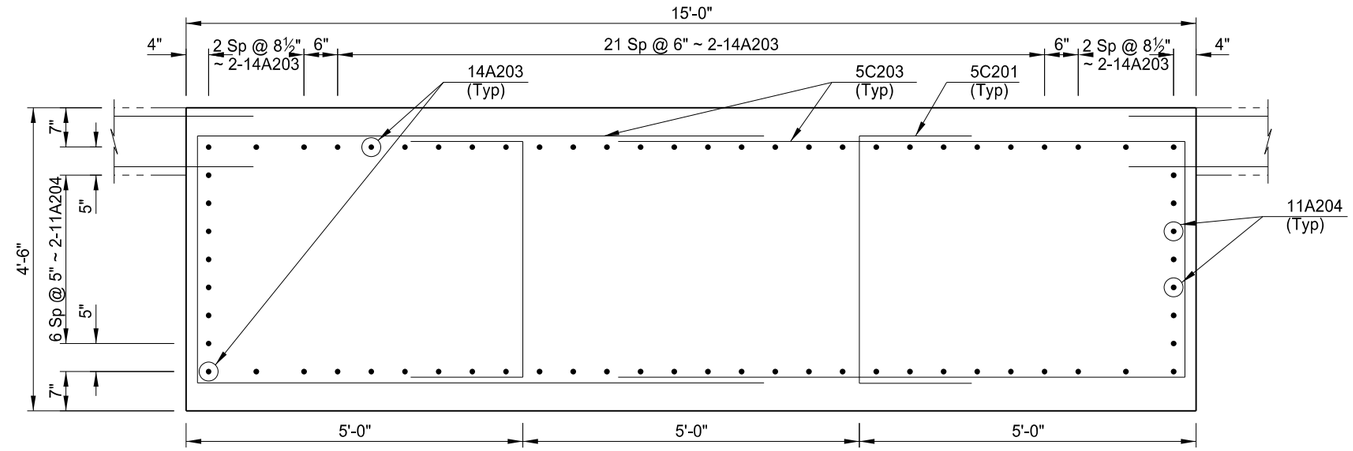

A-A

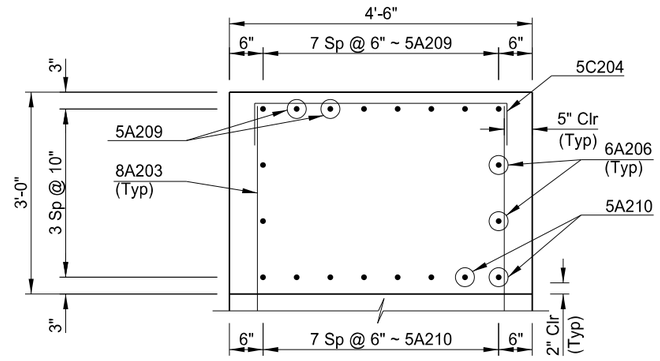

B-B

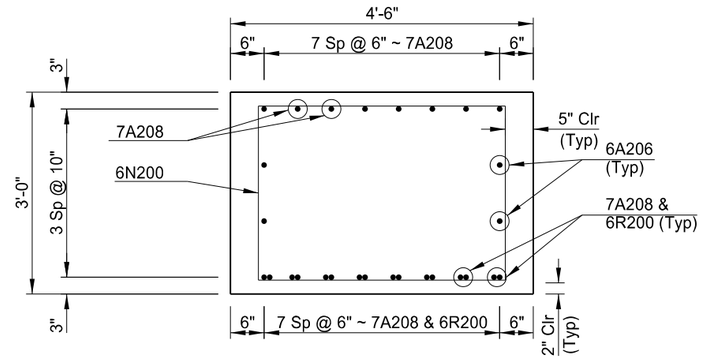

C-C

This document was originally issued and sealed by Colin A. Moran, Registration Number PE 5344, on 08/15/16 and the original document is stored at the North Dakota Department of Transportation

QUANTITIES
SEE DWG 20-103.403-22

BNSF RAILWAY
1 MILE NORTH OF US 2

BNSF Ry. Br.0033-0085.600

PIER DETAILS

NOTE:

See Dwg 20-103.403-20 for location of Sections A-A, B-B and C-C.

STATE	PROJECT NUMBER	SECTION NO.	SHEET NO.
ND	NHU-3-020(074)103	170	46

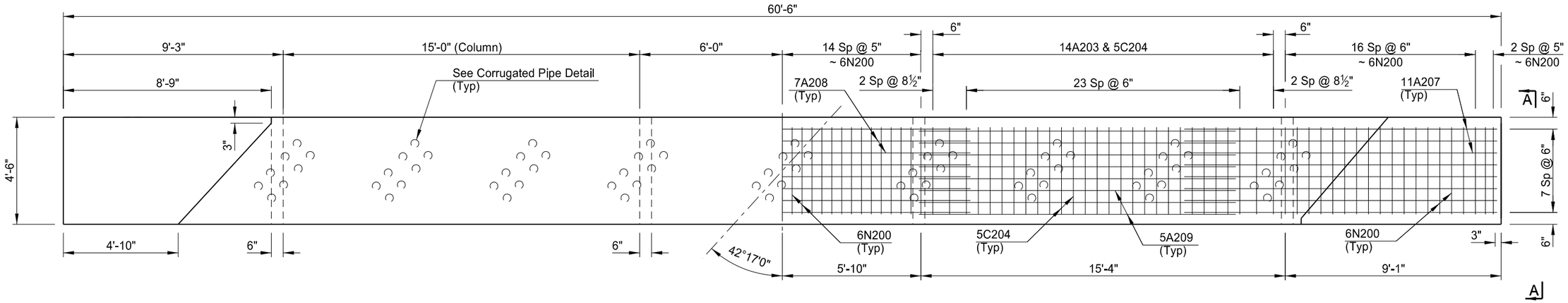

(Half Showing Dimensions)

(Half Showing Reinforcing)

PLAN

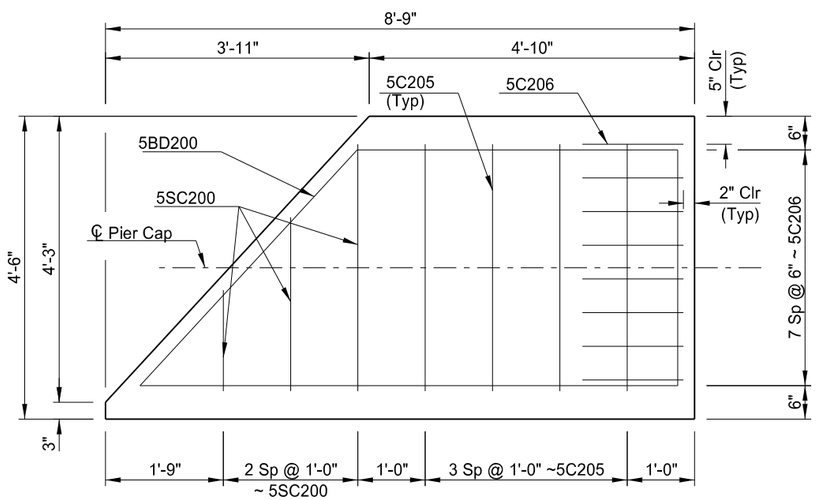

STEP DETAIL

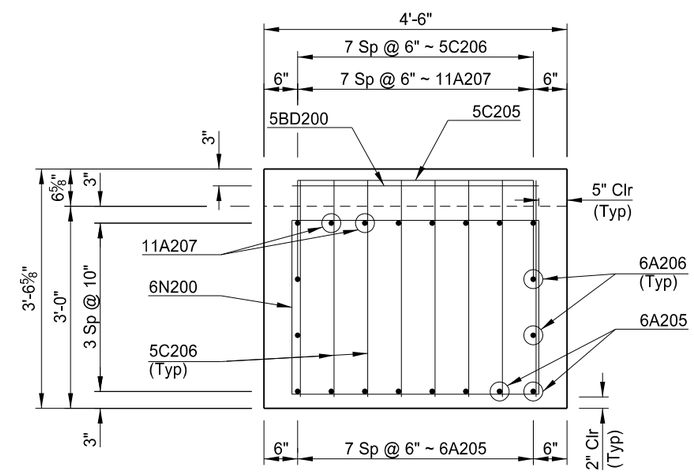

A-A

NOTES:

1. After the bearing is set and prior to girder erection, suspend the anchor bolts in the corrugated pipe. After the girders are set, place a non-shrink grout in the corrugated pipe using the grout tube. Include all materials and labor required to install corrugated pipe in the unit price bid item, "Class AAE-3 Concrete".
2. The quantity and dimensions of anchor bolts will be determined by the disc bearing manufacturer. Locations shown are not final.
3. Slightly adjust the position of the rebar in the pier cap to allow the corrugated pipes to be installed as required by the disc bearing manufacturer.
4. Drill or cast 2"x2'-0" holes prior to setting the fascia girder. See Dwg 20-103.403-36 for details.

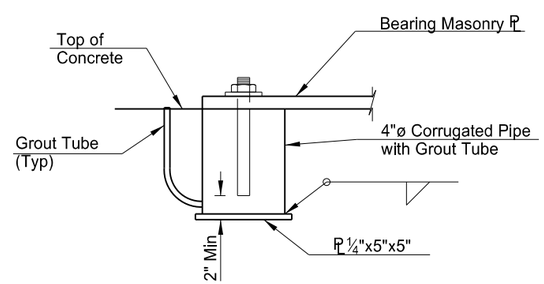

CORRUGATED PIPE DETAIL
(All Bearings)

QUANTITIES	PIER 2
CLASS AAE-3 CONCRETE	291.0 CY
REINFORCING STEEL	63,018 LBS
REINFORCING STEEL (EPOXY)	1,497 LBS

QUANTITIES	PIER 3
CLASS AAE-3 CONCRETE	291.0 CY
REINFORCING STEEL	63,016 LBS
REINFORCING STEEL (EPOXY)	1,496 LBS

This document was originally issued and sealed by Colin A. Moran, Registration Number PE 5344, on 08/26/16 and the original document is stored at the North Dakota Department of Transportation

BNSF RAILWAY
1 MILE NORTH OF US 2

BNSF Ry. Br.0033-0085.600

PIER CAP DETAILS

STATE	PROJECT NUMBER	SECTION NO.	SHEET NO.
ND	NHU-3-020(074)103	170	47

BEARING TABLE

LOCATION	GIRDER NO.	BEARING MARK ①	BEARING TYPE ②	BEARING DESIGN LOADS (kips) SERVICE LIMIT STATE VERTICAL	HORIZONTAL
Abutment 1	1	1.1	III	201	0
	2	1.2	III	175	0
	3	1.3	III	171	0
	4	1.4	III	212	0
	5	1.5	II	101	56
	6	1.6	III	195	0
	7	1.7	III	199	0
	8	1.8	III	200	0
	9	1.9	III	249	0
Pier 2 (Span 1)	1	2.1	IV	223	35
	2	2.2	IV	173	34
	3	2.3	IV	177	34
	4	2.4	IV	165	34
	5	2.5	I	101	56
	6	2.6	IV	210	34
	7	2.7	IV	166	34
	8	2.8	IV	176	34
	9	2.9	IV	199	35
Pier 2 (Span 2)	1	2.10	IV	282	58
	2	2.11	IV	265	56
	3	2.12	IV	243	56
	4	2.13	IV	276	57
	5	2.14	I	184	70
	6	2.15	IV	238	58
	7	2.16	IV	251	57
	8	2.17	IV	252	56
	9	2.18	IV	334	60
Pier 3 (Span 2)	1	3.1	III	334	0
	2	3.2	III	252	0
	3	3.3	III	251	0
	4	3.4	III	238	0
	5	3.5	II	184	70
	6	3.6	III	276	0
	7	3.7	III	243	0
	8	3.8	III	265	0
	9	3.9	III	282	0
Pier 3 (Span 3)	1	3.10	IV	199	35
	2	3.11	IV	176	34
	3	3.12	IV	166	34
	4	3.13	IV	210	34
	5	3.14	I	101	56
	6	3.15	IV	165	34
	7	3.16	IV	177	34
	8	3.17	IV	173	34
	9	3.18	IV	223	35
Abutment 4	1	4.1	III	249	0
	2	4.2	III	200	0
	3	4.3	III	199	0
	4	4.4	III	195	0
	5	4.5	II	101	56
	6	4.6	III	212	0
	7	4.7	III	171	0
	8	4.8	III	175	0
	9	4.9	III	201	0

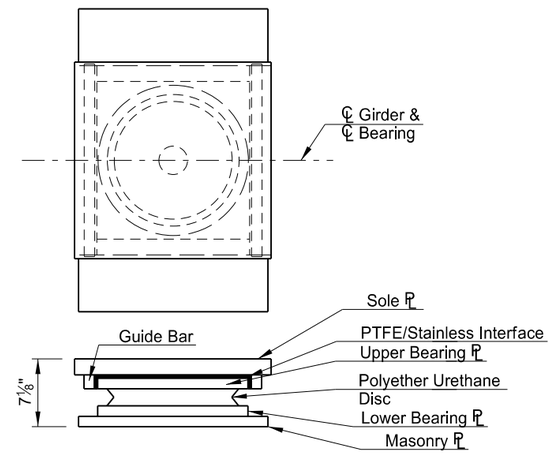

TYPE IV
(GUIDED TRANSVERSE EXPANSION)

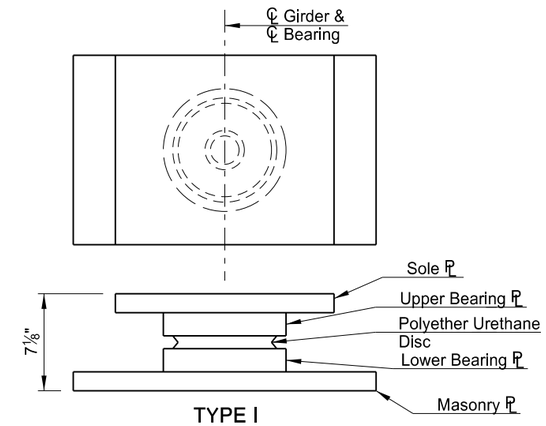

TYPE I
(FIXED)

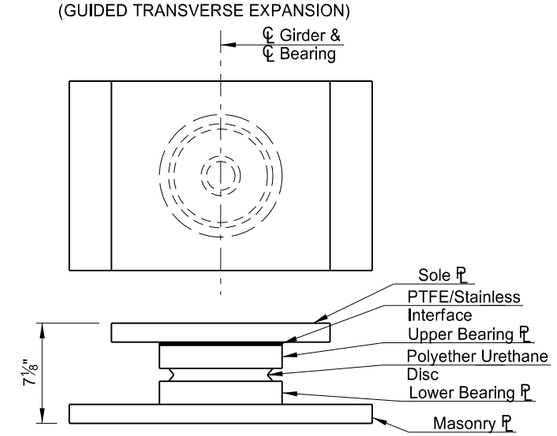

TYPE III
(NON-GUIDED EXPANSION)

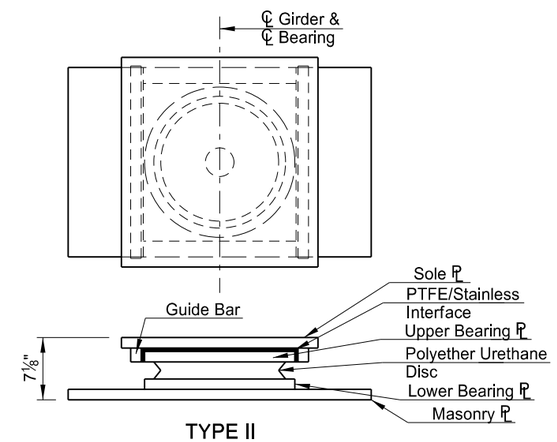

TYPE II
(GUIDED LONGITUDINAL EXPANSION)

This document was originally issued and sealed by Colin A. Moran, Registration Number PE 5344, on 08/26/16 and the original document is stored at the North Dakota Department of Transportation

NOTES:

1. Permanently mark the top plate of all bearings before shipping. Include the bearing location and direction arrows on the bearings. Install bearings so that the direction arrow is point up station and visible.
2. TYPE I: Fixed Disc Bearing
   TYPE II: Uni-Directional (Guided Longitudinal Expansion) Disc Bearings
   TYPE III: Multi-Directional (Non-Guided Expansion) Disc Bearings
   TYPE IV: Uni-Directional (Guided Transverse Expansion) Disc Bearings
3. Use the bearing heights as shown.
4. Design all bearings for 0.02 radians rotation.
5. The maximum coefficient of sliding friction is 8% at any contact pressure on the PTFE. PTFE denotes Polytetrafluorethylene sheet.
6. Disc manufacturer is responsible for design and dimensioning of anchorage from girder to bearing and from bearing to substructure.
7. Connect girder to disc bearing with connection detail designed by the disc manufacturer.

QUANTITIES	
BEARINGS (EXPANSION)	51 EA
BEARINGS (FIXED)	3 EA

BNSF RAILWAY
1 MILE NORTH OF US 2

BNSF Ry. Br.0033-0085.600

DISC BEARING DETAILS

STATE	PROJECT NUMBER	SECTION NO.	SHEET NO.
ND	NHU-3-020(074)103	170	48

NOTES:

1. See Dwg 20-103.403-25 for Span 2 Framing Plan and for Pier Fascia Girder Detail.
2. See Dwg 20-103.403-27 and Dwg 20-103.403-28 for Girder End Details.

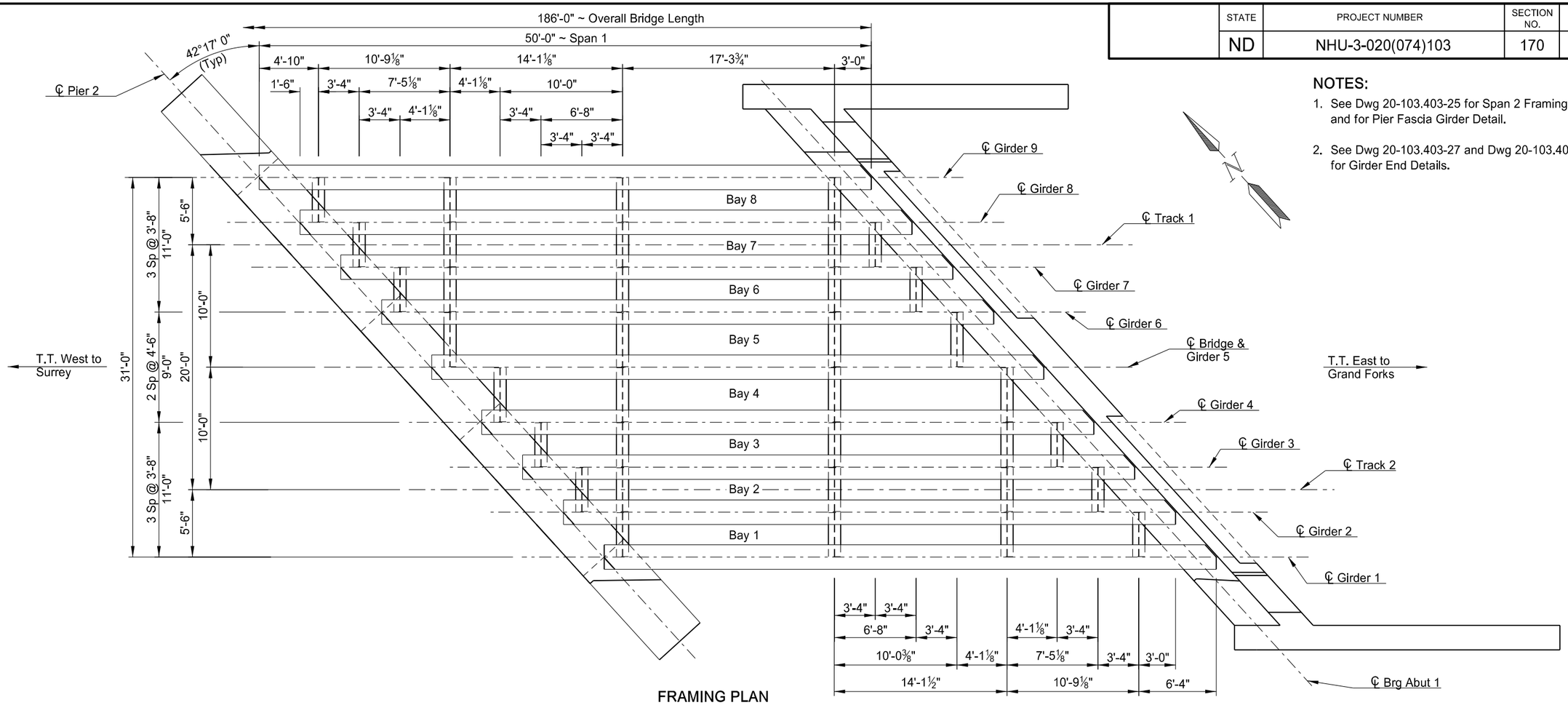

FRAMING PLAN

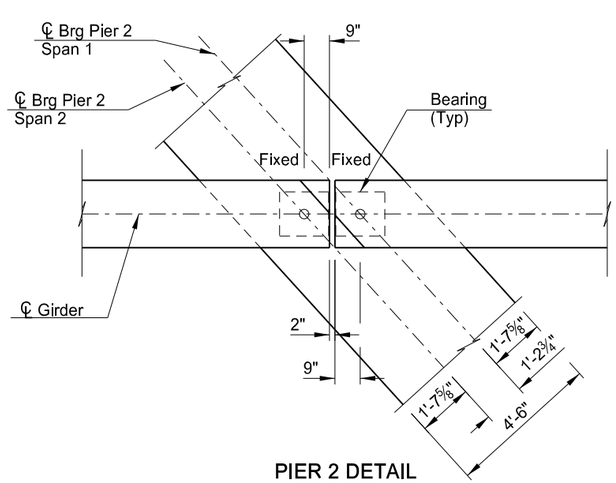

PIER 2 DETAIL

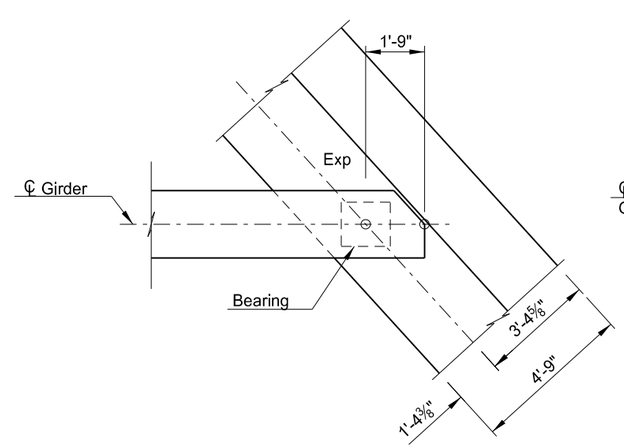

ABUTMENT 1 DETAIL

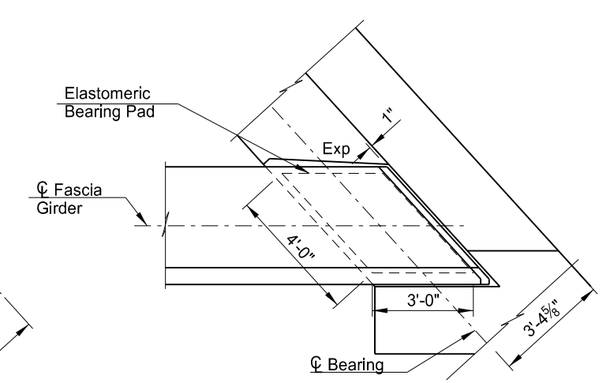

ABUTMENT FASCIA GIRDER DETAIL

(Abutment 1 Shown, Abutment 4 Similar)

This document was originally issued and sealed by Colin A. Moran, Registration Number PE 5344, on 08/15/16 and the original document is stored at the North Dakota Department of Transportation

BNSF RAILWAY
1 MILE NORTH OF US 2

BNSF Ry. Br.0033-0085.600

FRAMING PLAN
SPAN 1

STATE	PROJECT NUMBER	SECTION NO.	SHEET NO.
ND	NHU-3-020(074)103	170	49

NOTES:

1. See Dwg 20-103.403-24 for Span 1 Framing Plan.
2. See Dwg 20-103.403-26 for Span 3 Framing Plan.
3. See Dwg 20-103.403-27 and Dwg 20-103.403-28 for Girder End Details.

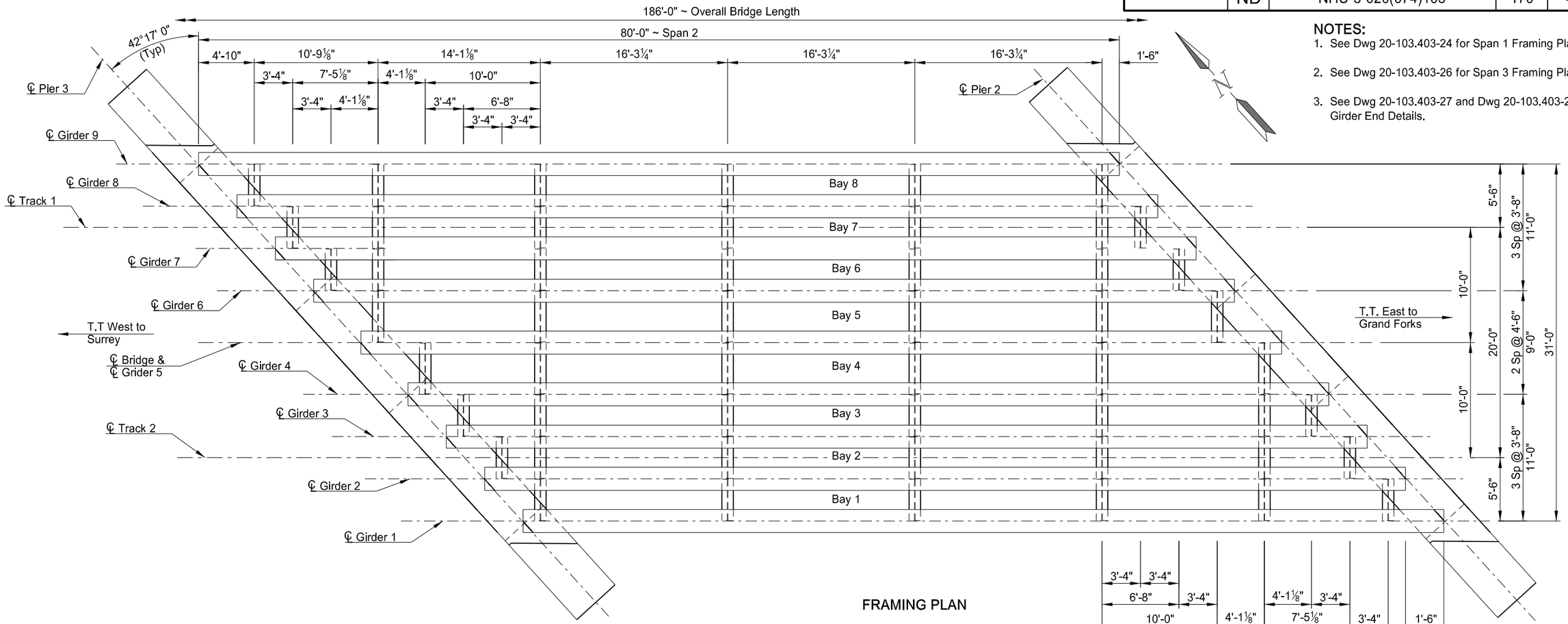

FRAMING PLAN

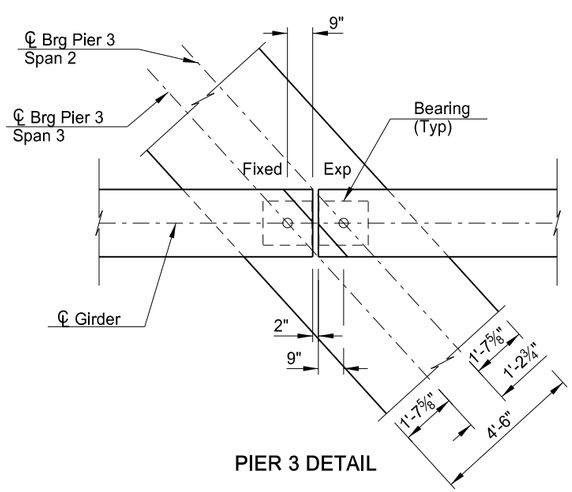

PIER 3 DETAIL

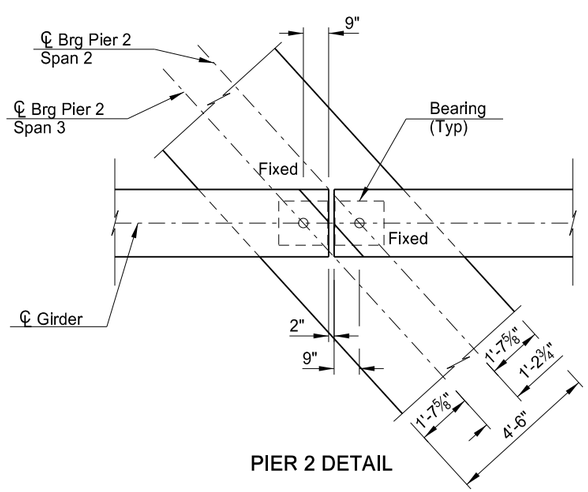

PIER 2 DETAIL

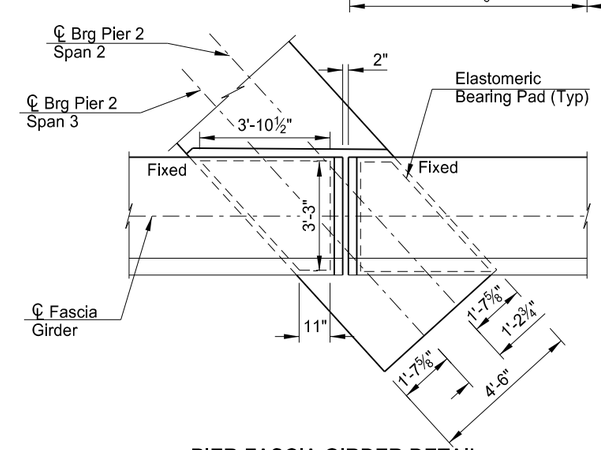

PIER FASCIA GIRDER DETAIL
(Pier 2 Shown, Pier 3 Similar)

This document was originally issued and sealed by Colin A. Moran, Registration Number PE 5344, on 08/15/16 and the original document is stored at the North Dakota Department of Transportation

BNSF RAILWAY
1 MILE NORTH OF US 2

BNSF Ry. Br.0033-0085.600

FRAMING PLAN
SPAN 2

STATE	PROJECT NUMBER	SECTION NO.	SHEET NO.
ND	NHU-3-020(074)103	170	50

NOTES:

1. See Dwg 20-103.403-25 for Span 2 Framing Plan and for Pier Fascia Girder Detail.
2. See Dwg 20-103.403-27 and Dwg 20-103.403-28 for Girder End Details.
3. See Dwg 20-103.403-24 for Abutment Fascia Girder Detail.

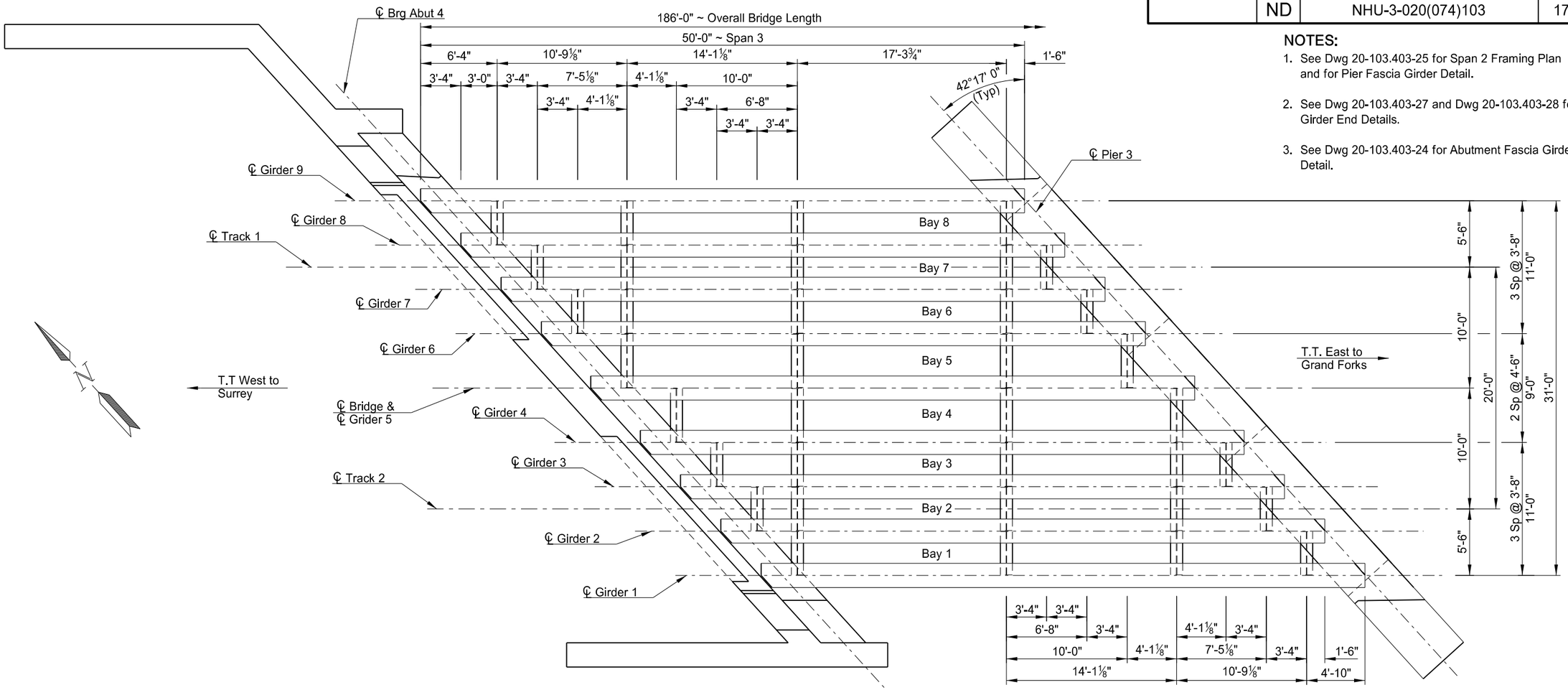

FRAMING PLAN

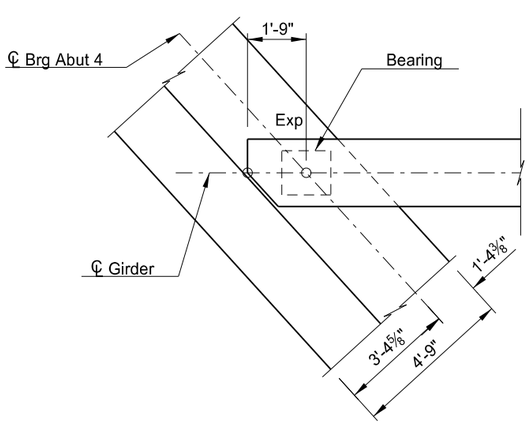

ABUTMENT 4 DETAIL

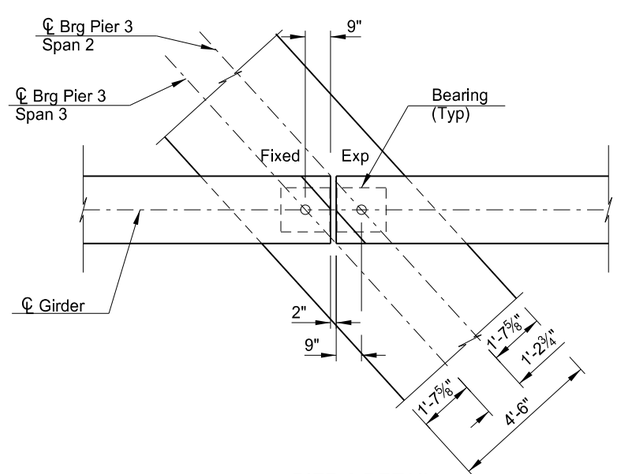

PIER 3 DETAIL

This document was originally issued and sealed by Colin A. Moran, Registration Number PE 5344, on 08/15/16 and the original document is stored at the North Dakota Department of Transportation

BNSF RAILWAY
1 MILE NORTH OF US 2

BNSF Ry. Br.0033-0085.600

FRAMING PLAN
SPAN 3

STATE	PROJECT NUMBER	SECTION NO.	SHEET NO.
ND	NHU-3-020(074)103	170	51

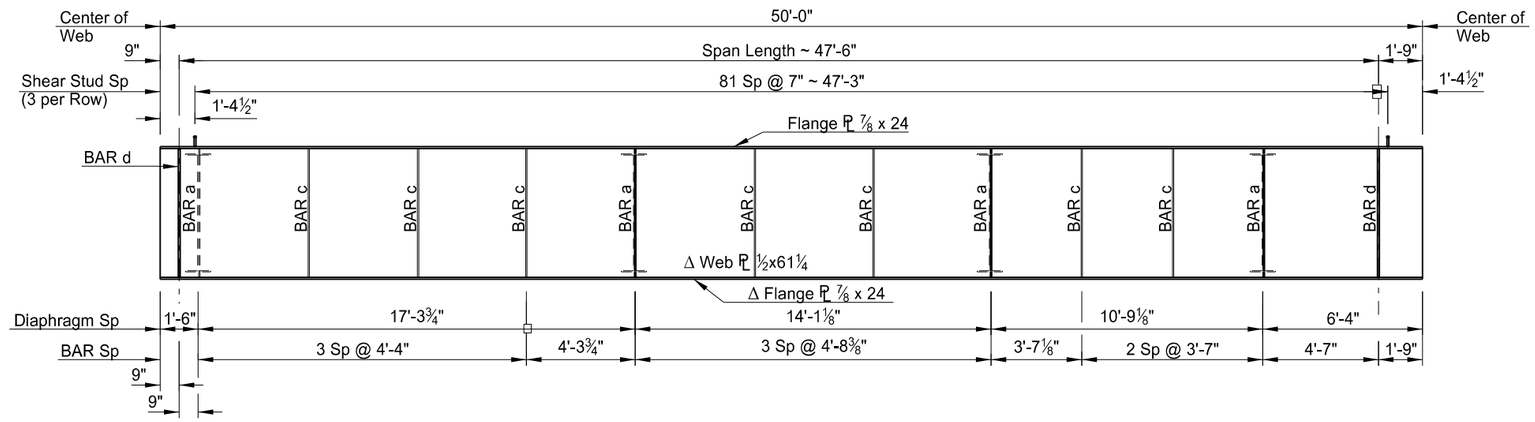

SPAN 1 GIRDER 1 ELEVATION

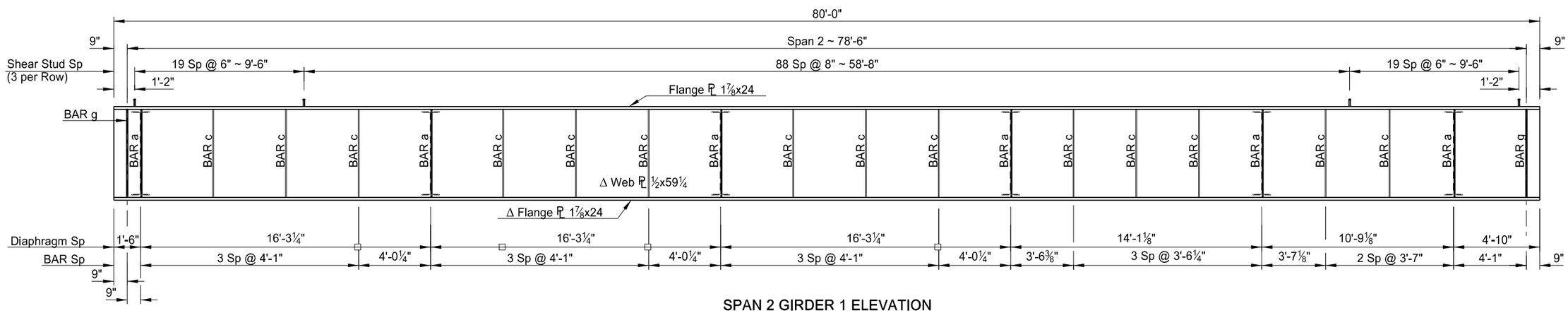

SPAN 2 GIRDER 1 ELEVATION

NOTES:

1. The girder elevation details shown represent Girder No. 1 in a nine girder bridge. Other girders are similar. Fabricate other girders in accordance with Dwgs 20-103.403-24 thru 20-103.403-28.
2. Perform the Charpy V-notch toughness test on all main load carrying members subject to tensile stress indicated by Δ. Meet the requirements of AREMA Table 15-1-2 for Zone 3.
3. All dimensions shown are horizontal.
4. South face of girder shown.
5. See Dwg 20-103.403-28 for Camber Diagram.
6. Bar Spacing shown is for Girder 1. Max bar spacing for Span 1 is 5'-1". Max bar spacing for Span 2 is 4'-3".
7. For locations with two diaphragm connections, use BAR b.

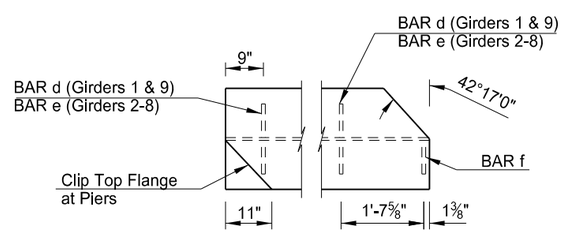

GIRDER END DETAIL
(Span 1)

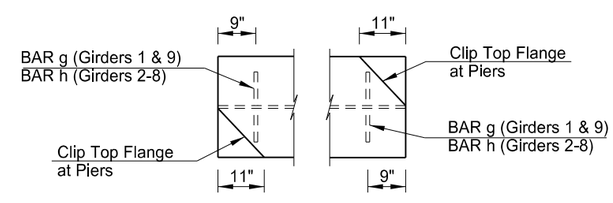

GIRDER END DETAIL
(Span 2)

This document was originally issued and sealed by Colin A. Moran, Registration Number PE 5344, on 08/26/16 and the original document is stored at the North Dakota Department of Transportation

BNSF RAILWAY
1 MILE NORTH OF US 2

BNSF Ry. Br.0033-0085.600

GIRDER ELEVATION
SPANS 1 & 2, GIRDER 1

STATE	PROJECT NUMBER	SECTION NO.	SHEET NO.
ND	NHU-3-020(074)103	170	52

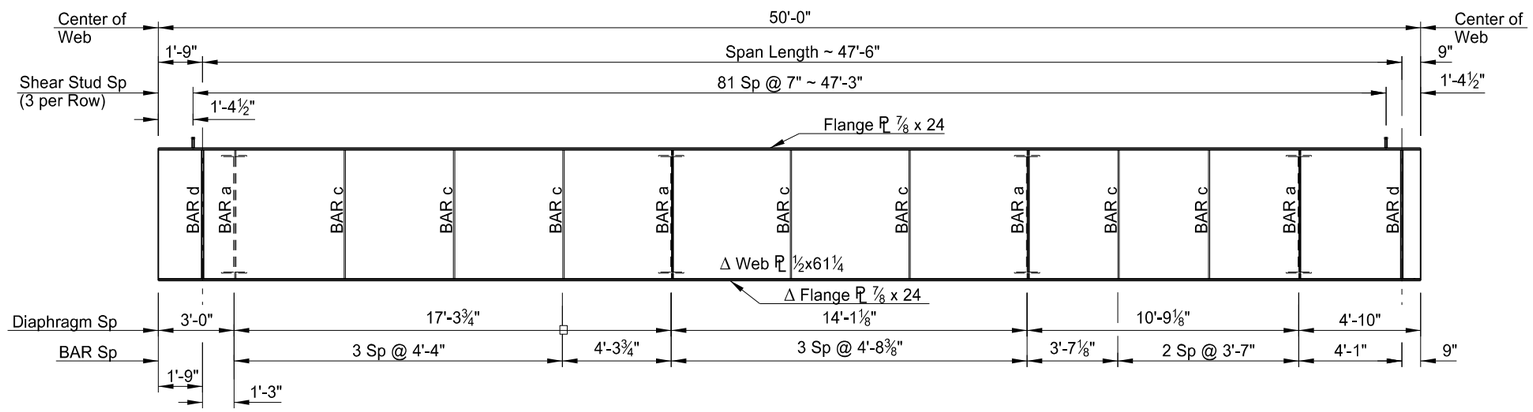

SPAN 3 GIRDER 1 ELEVATION

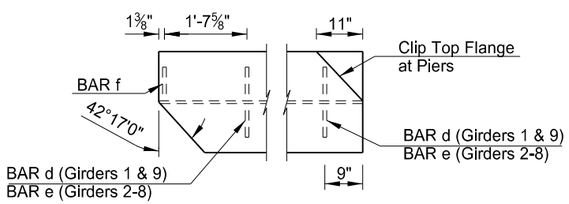

GIRDER END DETAIL

(Span 3)

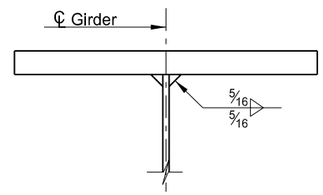

FLANGE TO WEB WELD DETAIL

(Both Flanges)

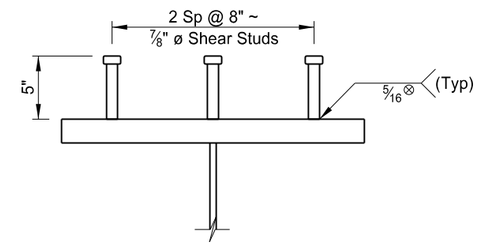

SHEAR STUD DETAIL

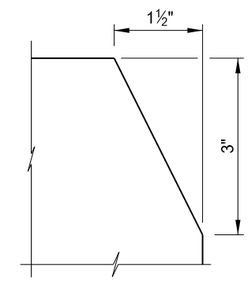

STIFFENER CLIP DETAIL

NOTES:

1. The girder elevation details shown represent Girder No. 1 in a nine girder bridge. Other girders are similar. Fabricate other girders in accordance with Dwgs 20-103.403-24 thru 20-103.403-28.
2. Perform the Charpy V-notch toughness test on all main load carrying members subject to tensile stress indicated by Δ. Meet the requirements of AREMA Table 15-1-2 for Zone 3.
3. All dimensions shown are horizontal.
4. South face of girder shown.
5. Bar Spacing shown is for Girder 1. Max bar spacing for Span 3 is 5'-1".
6. Due to beam fabrication tolerances, a stud height other than that shown may be required. After the beams have been installed and the tops of the beams have been surveyed, verify that the 5" high shear studs, when installed, will protrude a minimum of 2" above the bottom mat of deck slab reinforcement and will be a minimum of 3" below the top of deck slab. If the shear stud does not meet these requirements, provide one that does.
7. For locations with two diaphragm connections, use BAR b.
8. Camber values shown include dead load deflection for the structural steel, deck, track and ballast.

CAMBER DIAGRAM

1.00	1.10	1.20	1.30	1.40	1.50	1.60	1.70	1.80	1.90	2.00	2.10	2.20	2.30	2.40	2.50	2.60	2.70	2.80	2.90	3.00	3.10	3.20	3.30	3.40	3.50	3.60	3.70	3.80	3.90	4.00
0"	1/16"	1/16"	⅛"	⅛"	⅛"	⅛"	⅛"	1/16"	1/16"	0"	3/16"	5/16"	7/16"	½"	½"	½"	7/16"	5/16"	3/16"	0"	1/16"	1/16"	⅛"	⅛"	⅛"	⅛"	⅛"	1/16"	1/16"	0"

This document was originally issued and sealed by Colin A. Moran, Registration Number PE 5344, on 08/26/16 and the original document is stored at the North Dakota Department of Transportation

BNSF RAILWAY
1 MILE NORTH OF US 2

BNSF Ry. Br.0033-0085.600

GIRDER ELEVATION
SPAN 3, GIRDER 1

STATE	PROJECT NUMBER	SECTION NO.	SHEET NO.
ND	NHU-3-020(074)103	170	53

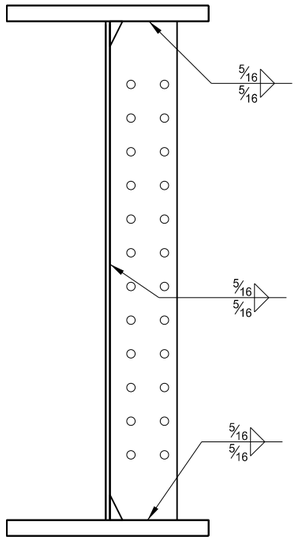

(Bar 8" x ½")

BAR a

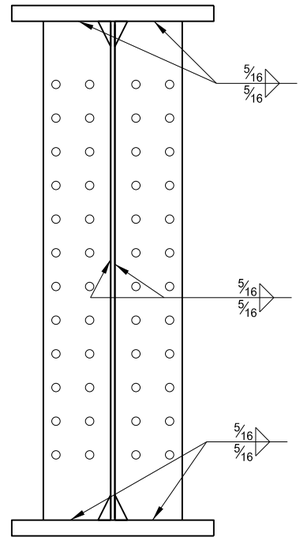

(Bar 8" x ½")

BAR b

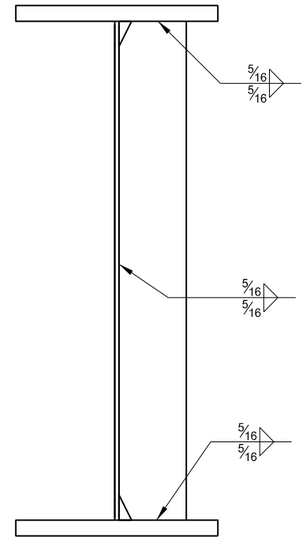

(Bar 8" x ½")

BAR c

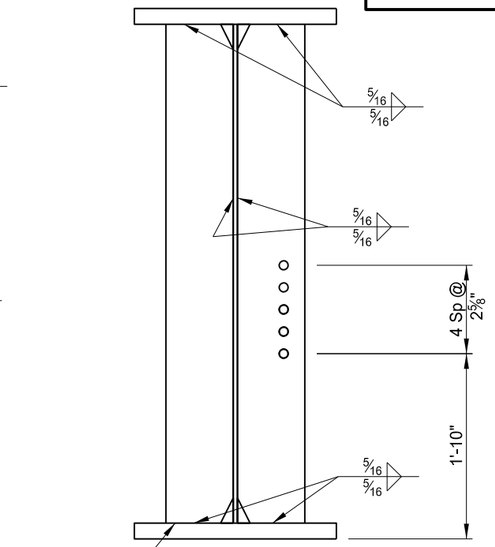

Mill to Bear at Bottom

(Bar 8" x ⅞")

BAR d

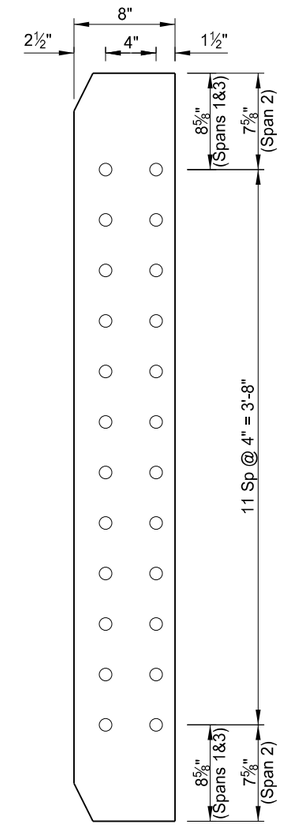

STIFFENER CONNECTION DETAIL

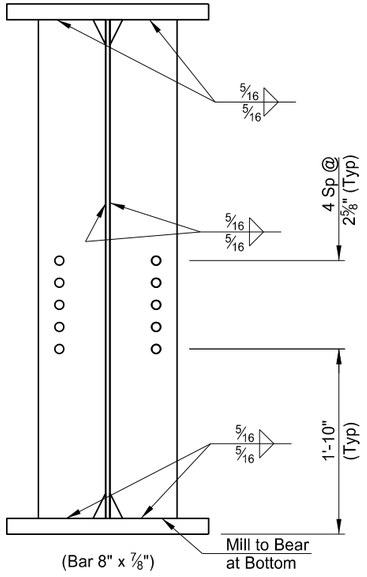

Mill to Bear at Bottom

(Bar 8" x ⅞")

BAR e

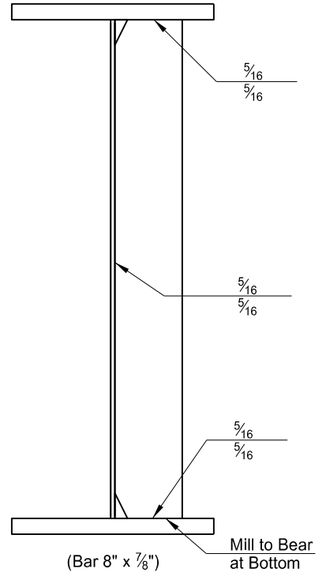

Mill to Bear at Bottom

(Bar 8" x ⅞")

BAR f

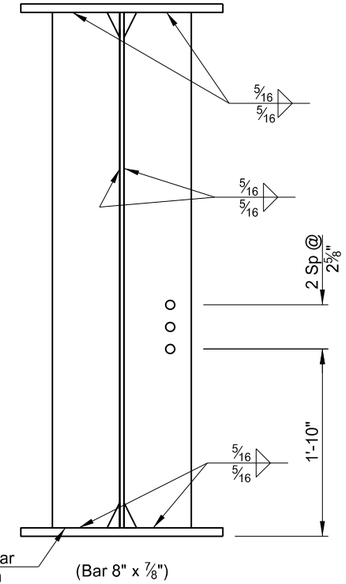

Mill to Bear at Bottom

(Bar 8" x ⅞")

BAR g

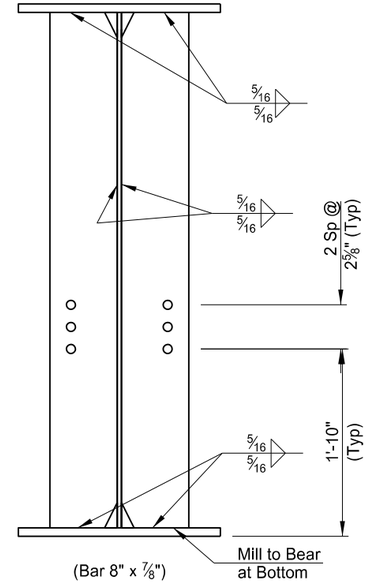

Mill to Bear at Bottom

(Bar 8" x ⅞")

BAR h

BAR DETAILS

This document was originally issued and sealed by Colin A. Moran, Registration Number PE 5344, on 08/15/16 and the original document is stored at the North Dakota Department of Transportation

NOTES:

1. Span 2 girder shown, Spans 1 & 3 similar, for BAR's a-c.
2. See Dwg 20-103.403-27 and Dwg 20-103.403-28 for BAR locations.
3. For locations with two diaphragm connections, use BAR b.
4. For locations with two jacking beam connections, use BAR e (for Spans 1 & 3) or BAR h (for Span2).

BNSF RAILWAY
1 MILE NORTH OF US 2

BNSF Ry. Br.0033-0085.600

STIFFENER DETAILS

STATE	PROJECT NUMBER	SECTION NO.	SHEET NO.
ND	NHU-3-020(074)103	170	54

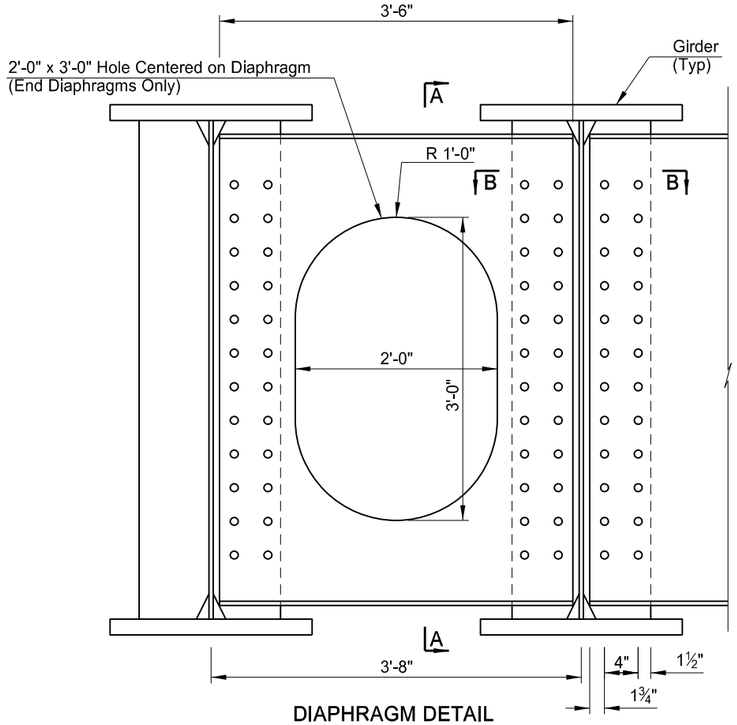

DIAPHRAGM DETAIL
(Girder Bay 1 Shown; Bays 2,3,6,7 & 8 Similar)

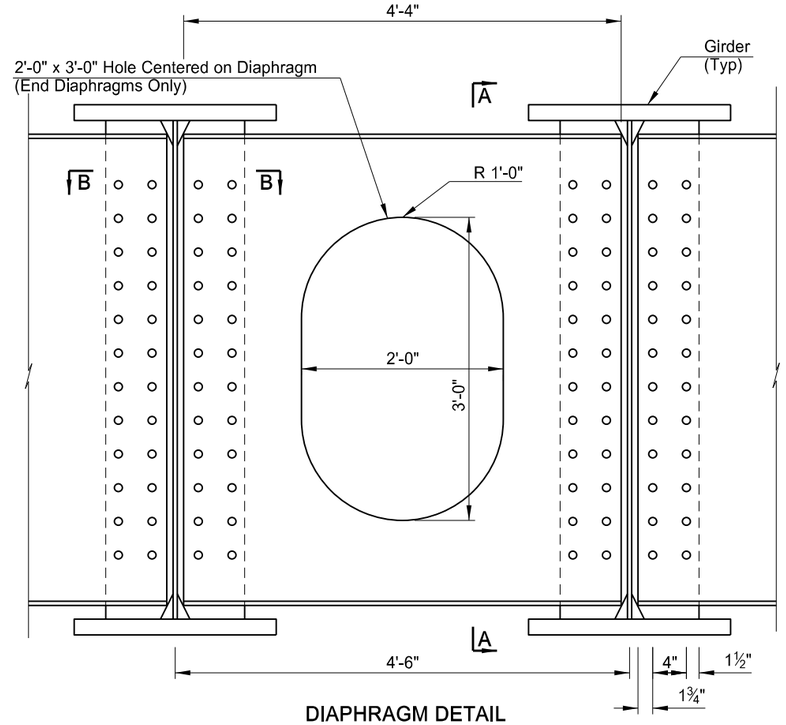

DIAPHRAGM DETAIL
(Girder Bays 4 & 5)

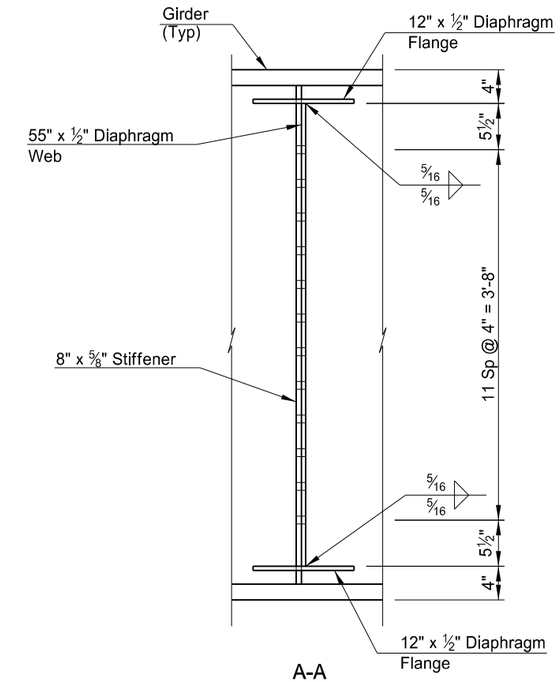

A-A

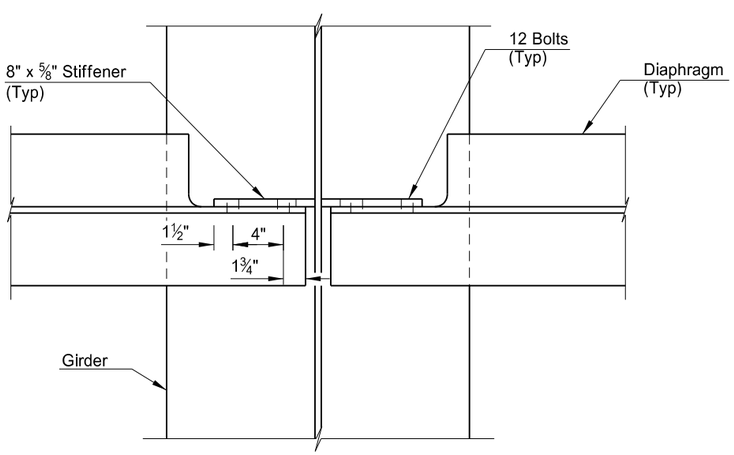

B-B

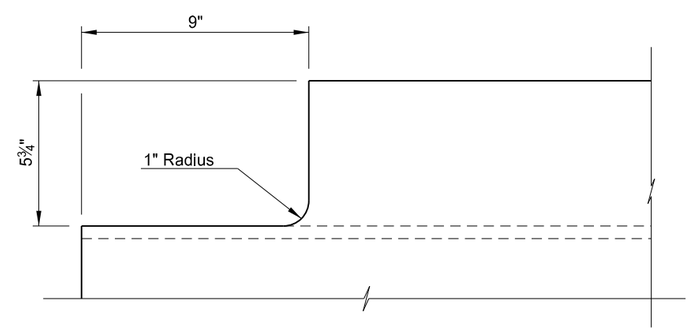

COPING DETAIL

This document was originally issued and sealed by Colin A. Moran, Registration Number PE 5344, on 08/15/16 and the original document is stored at the North Dakota Department of Transportation

NOTES:

1. Span 2 shown, Spans 1 & 3 similar.
2. See Dwg 20-103.403-24 through Dwg 20-103.403-28 for diaphragm locations.

BNSF RAILWAY
1 MILE NORTH OF US 2

BNSF Ry. Br.0033-0085.600

DIAPHRAGM DETAILS

STATE	PROJECT NUMBER	SECTION NO.	SHEET NO.
ND	NHU-3-020(074)103	170	55

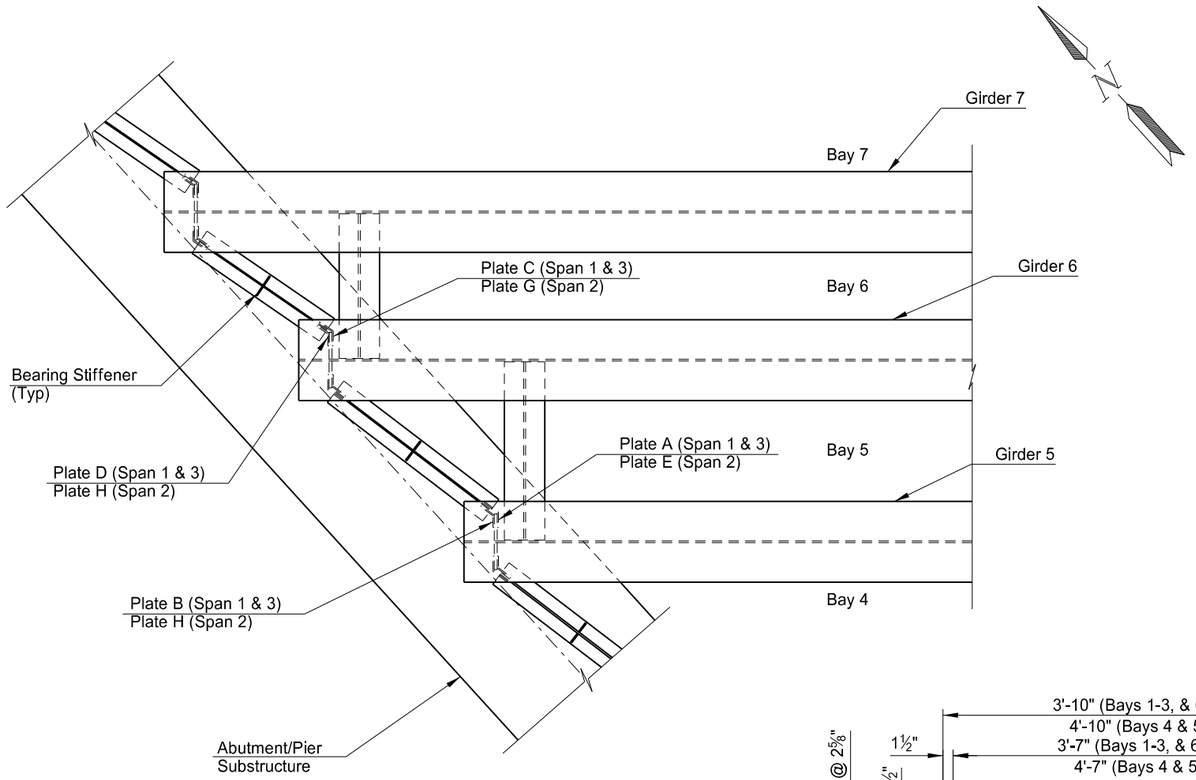

FRAMING PLAN

(Other Bays Similar)

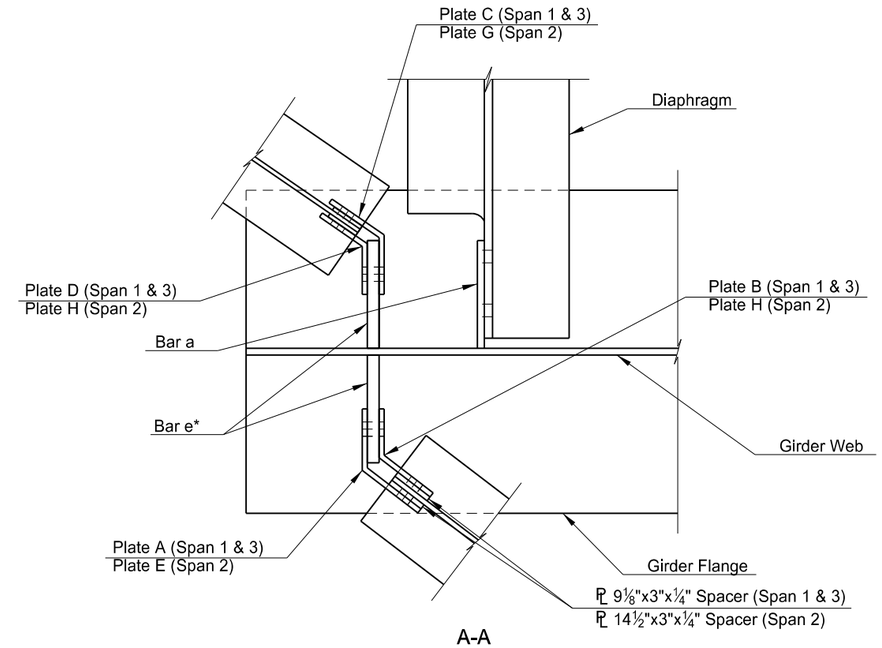

A-A

*Use Bar d when only one Jacking Beam is required.

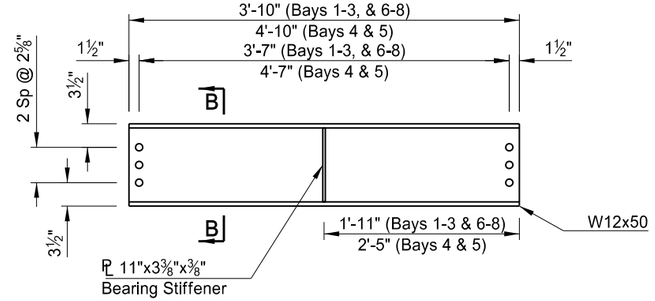

SPAN 1 & 3 JACKING BEAM

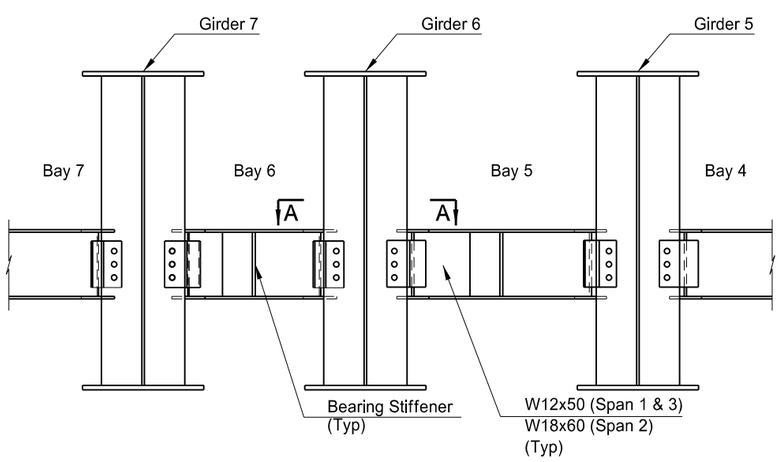

CONNECTION ELEVATION

(Spans 1 & 3 Shown, Span 2 Similar)

(Other Bays Similar)

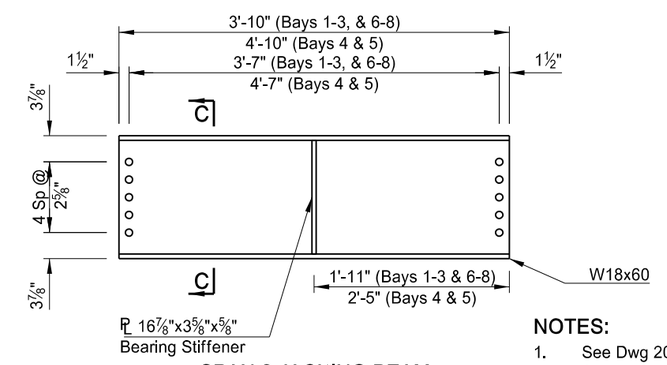

SPAN 2 JACKING BEAM

NOTES:

1. See Dwg 20-103.403-32 for Section B-B.
2. See Dwg 20-103.403-33 for Section C-C.

This document was originally issued and sealed by Colin A. Moran, Registration Number PE 5344, on 08/15/16 and the original document is stored at the North Dakota Department of Transportation

BNSF RAILWAY
1 MILE NORTH OF US 2

BNSF Ry. Br.0033-0085.600

JACKING BEAM DETAIL

STATE	PROJECT NUMBER	SECTION NO.	SHEET NO.
ND	NHU-3-020(074)103	170	56

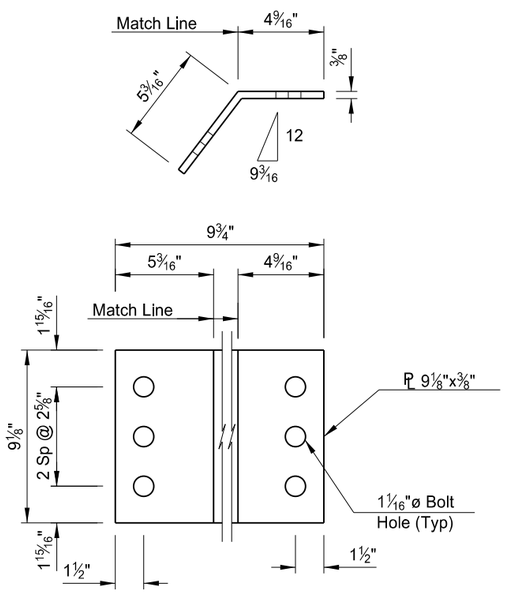

PLATE A DETAIL
Quantity = 16

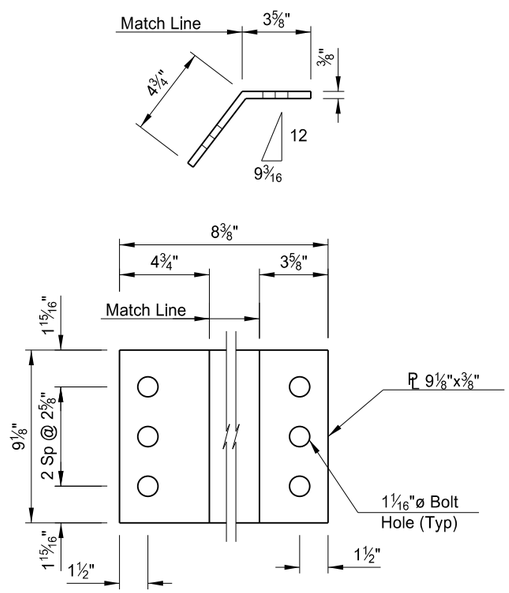

PLATE B DETAIL
Quantity = 16

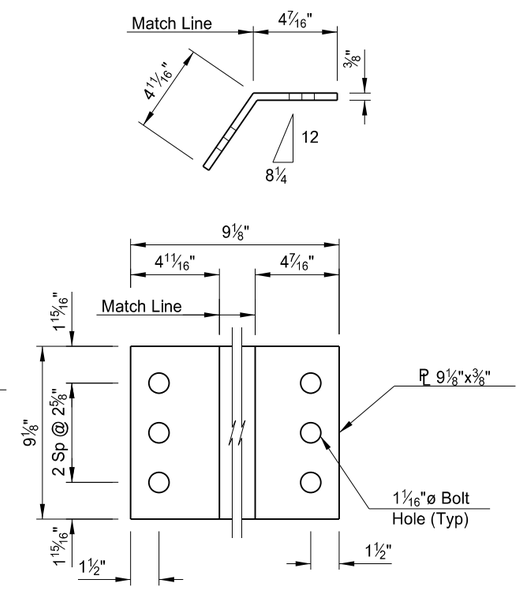

PLATE C DETAIL
Quantity = 48

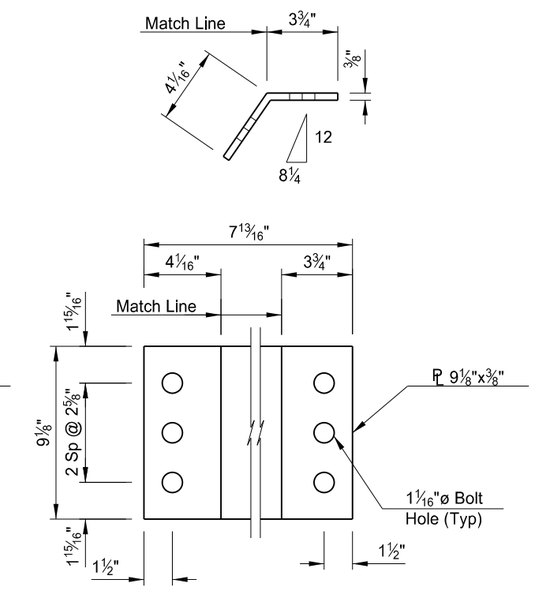

PLATE D DETAIL
Quantity = 48

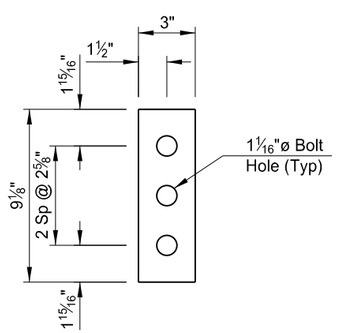

PL 9 1/8"x3"x1/4" SPACER
Quantity = 128

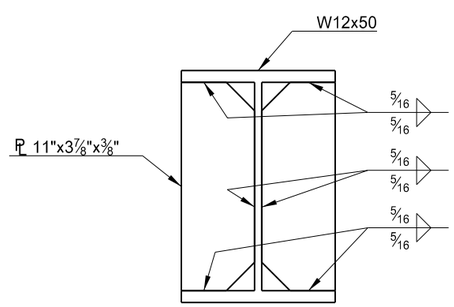

B-B

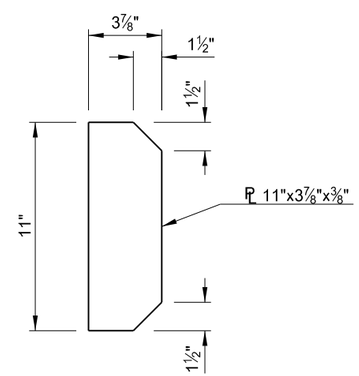

BEARING STIFFENER DETAIL
Quantity = 64

This document was originally issued and sealed by Colin A. Moran, Registration Number PE 5344, on 08/26/16 and the original document is stored at the North Dakota Department of Transportation

NOTE:
See Dwg 20-103.403-31 for B-B location.

BNSF RAILWAY
1 MILE NORTH OF US 2

BNSF Ry. Br.0033-0085.600

FRAMING PLAN
SPAN 1 & 3

STATE	PROJECT NUMBER	SECTION NO.	SHEET NO.
ND	NHU-3-020(074)103	170	57

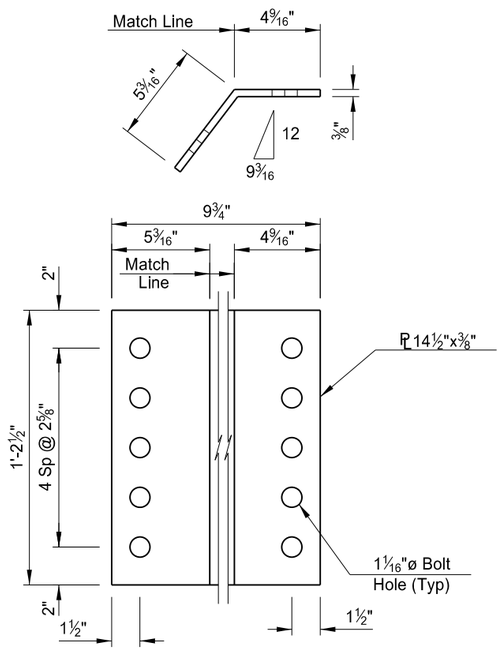

PLATE E DETAIL
Quantity = 8

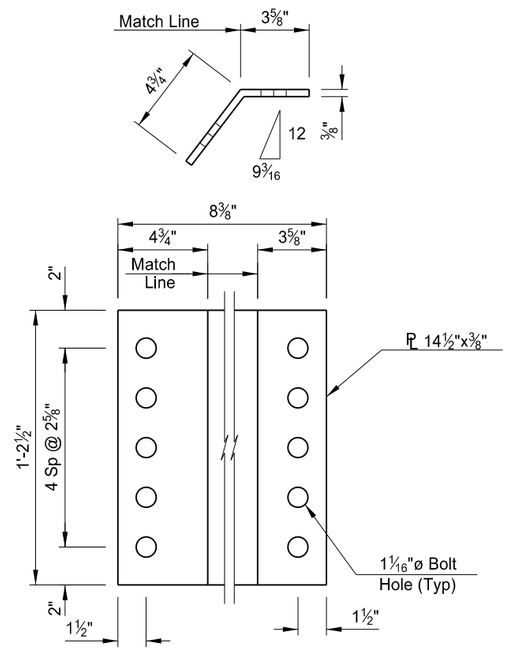

PLATE F DETAIL
Quantity = 8

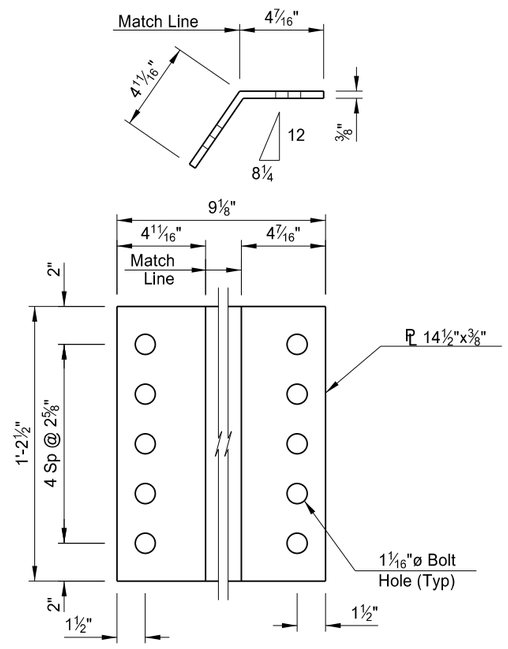

PLATE G DETAIL
Quantity = 24

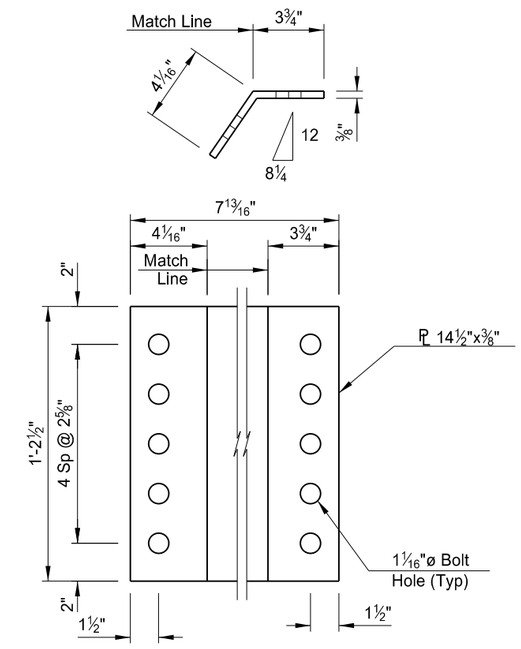

PLATE H DETAIL
Quantity = 24

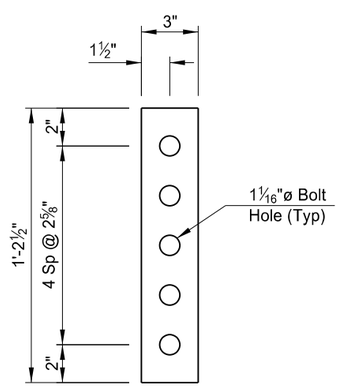

PL 14 1/2"x3"x1/4" SPACER
Quantity = 64

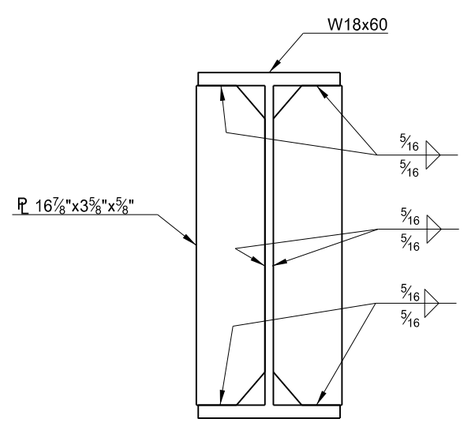

C-C

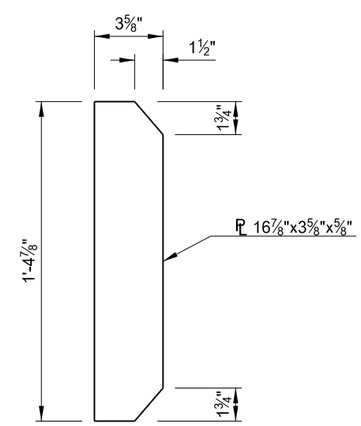

BEARING STIFFENER DETAIL
Quantity = 32

This document was originally issued and sealed by Colin A. Moran, Registration Number PE 5344, on 08/26/16 and the original document is stored at the North Dakota Department of Transportation

NOTE:
See Dwg 20-103.403-31 for C-C location.

BNSF RAILWAY
1 MILE NORTH OF US 2

BNSF Ry. Br.0033-0085.600

FRAMING PLAN
SPAN 2

STATE	PROJECT NUMBER	SECTION NO.	SHEET NO.
ND	NHU-3-020(074)103	170	58

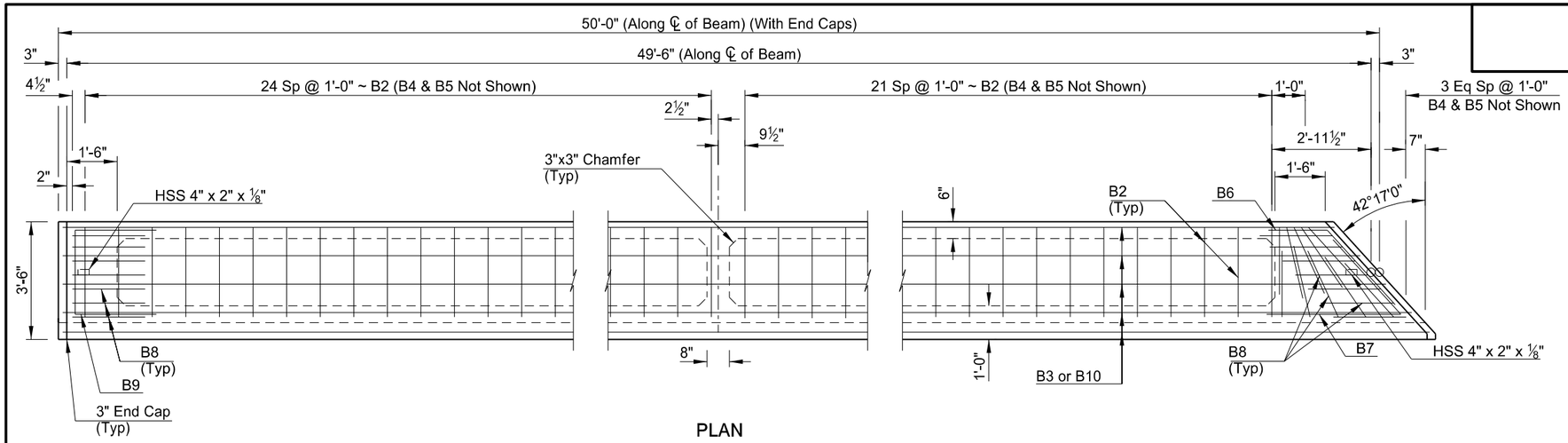

PLAN

(Span 1 Shown, Span 3 Reversed)

BAR LIST ~ ONE BEAM				
MARK	SIZE	NO.	LENGTH	SHAPE
B2	4	47	22'-4'	BENT
B3*	4	30	23'-0"	STR
B4	4	47	3'-10"	BENT
B5	4	47	4'-0"	BENT
B6	4	7	4'-9"	BENT
B7	4	7	7'-0"	BENT
B8	4	24	12'-8"	BENT
B9	4	7	7'-4"	BENT
B10*	4	30	30'-0"	STR

* Pair Bars Together and Alternate Lap Splices

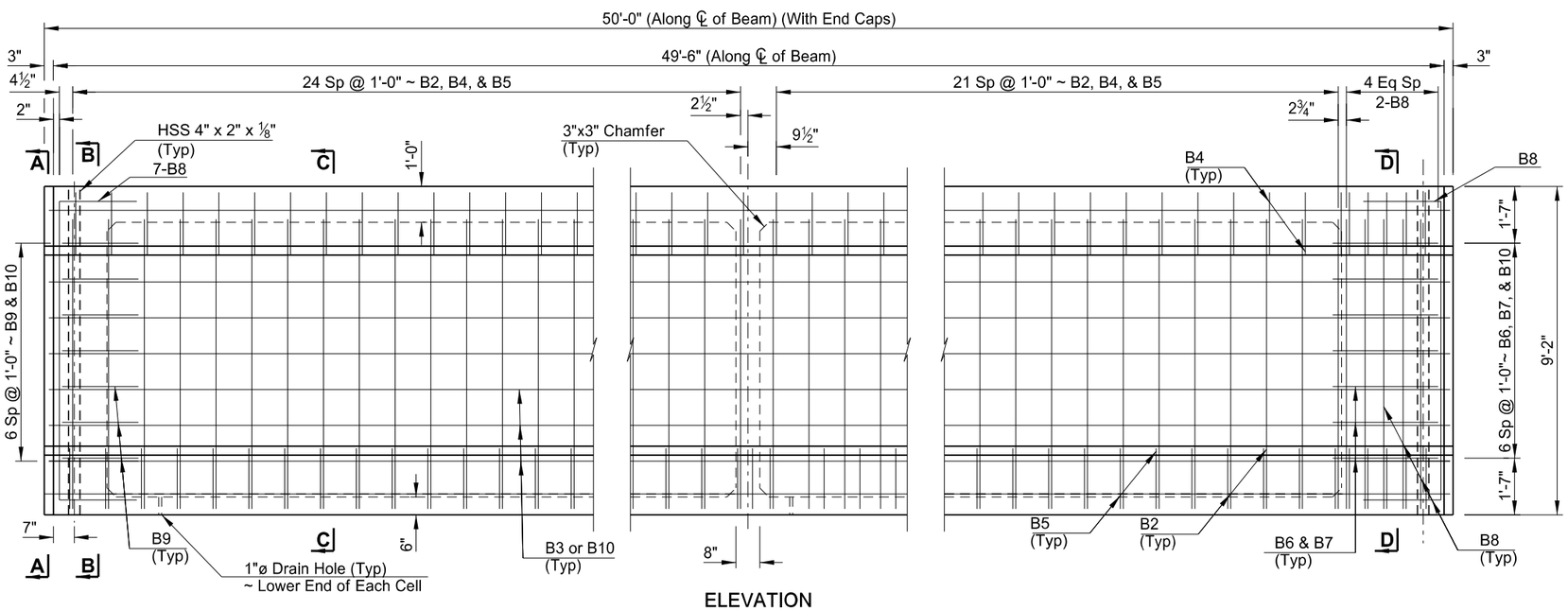

ELEVATION

(Span 1 Shown, Span 3 Reversed)

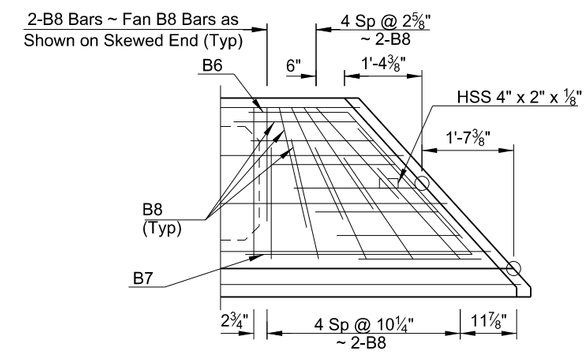

SKEWED END DETAIL

BEAM SECTION DATA (W/O AESTHETICS)
WT = 1,653 LBS/FT + 8,714 LBS FOR BLOCKS*
CROSS SECTIONAL AREA = 1,536 IN²
C.G. (FROM BOTTOM) = 52 IN
I = 1,817,216.0 IN⁴
SB= 34,946.5 IN³
END AREA = 3,744 IN²

* 2 End Blocks and 1 Center Block

** Aesthetics Wt. = 321 LBS/FT

PRESTRESSING DATA (SPAN 1 & 3)					
C.G.	FINAL FORCE	DETENSION STRENGTH	ACCEPTANCE STRENGTH	WEIGHT (TONS)	BEAM LENGTH
1.75"	297.3 k	4000 psi (Min)	5000 psi (Min)	53.2	49'-6"
2.00"	298.3 k				
2.25"	299.3 k				

NOTES:

1. Aesthetics details omitted for clarity.
2. See Dwg. 20-103.403-36 for Sections A-A, B-B, C-C and D-D.
3. See Dwg. 20-103.403-36 for Bent Bar Details and Dowel Bar Installation Details.

This document was originally issued and sealed by Colin A. Moran, Registration Number PE 5344, on 08/15/16 and the original document is stored at the North Dakota Department of Transportation

QUANTITIES
SEE DWG 20-102.403-36

BNSF RAILWAY
1 MILE NORTH OF US 2

BNSF Ry. Br.0033-0085.600

PRESTRESSED CONCRETE
FASCIA GIRDERS (SPANS 1 & 3)

STATE	PROJECT NUMBER	SECTION NO.	SHEET NO.
ND	NHU-3-020(074)103	170	59

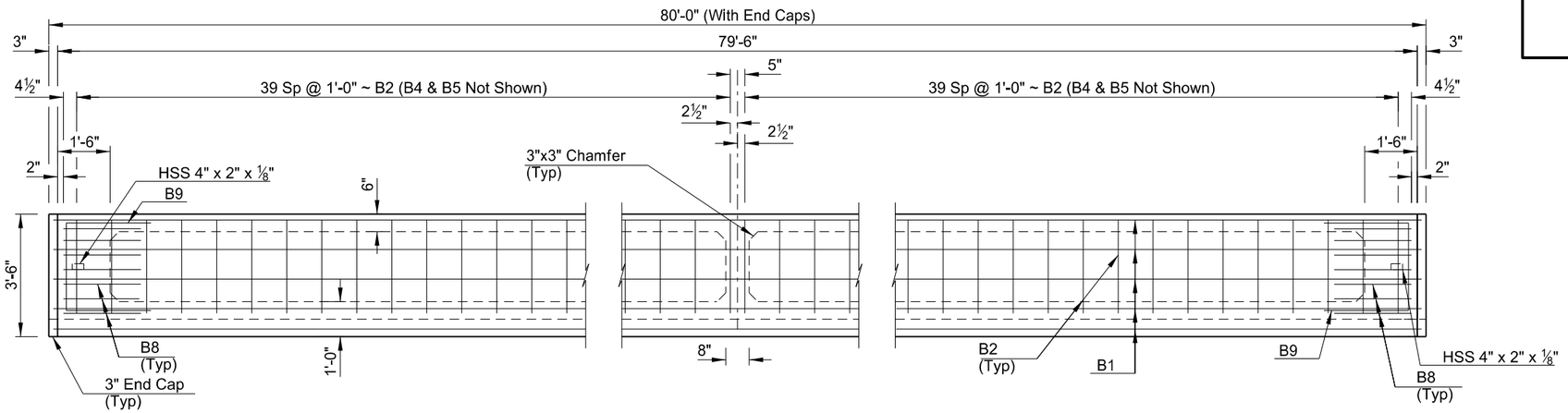

PLAN

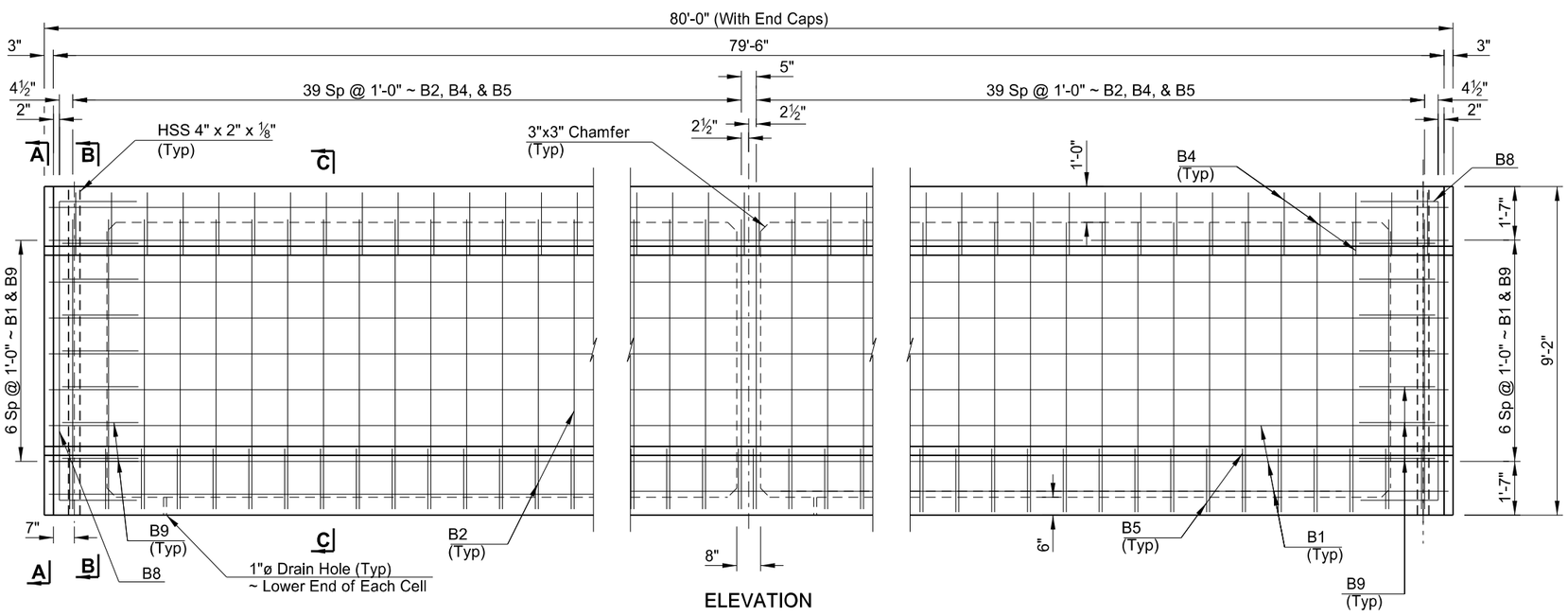

ELEVATION

BAR LIST ~ ONE BEAM

MARK	SIZE	NO.	LENGTH	SHAPE
B1	4	30	79'-8" *	STR
B2	4	80	22'-4"	BENT
B4	4	80	3'-10"	BENT
B5	4	80	4'-0"	BENT
B8	4	14	12'-8"	BENT
B9	4	14	7'-4"	BENT

* Lab Splices as Needed

BEAM SECTION DATA (W/O AESTHETICS)

WT = 1,653 LBS/FT + 8,714 LBS FOR BLOCKS*
CROSS SECTIONAL AREA = 1,536 IN^2
C.G. (FROM BOTTOM) = 52 IN
I = 1,817,216.0 IN^4
S_B= 34,946.5 IN^3
END AREA = 3,744 IN^2

* 2 End Blocks and 1 Center Block

** Aesthetics Wt. = 321 LBS/FT

PRESTRESSING DATA (SPAN 2)

C.G.	FINAL FORCE	DETENSION STRENGTH	ACCEPTANCE STRENGTH	WEIGHT (TONS)	BEAM LENGTH
1.75"	372.0 k	4000 psi (Min)	5000 psi (Min)	82.9	79'-6"
2.00"	373.2 k				
2.25"	374.5 k				

NOTES:

1. Aesthetics details omitted for clarity.
2. See Dwg. 20-103.403-36 for Sections A-A, B-B, and C-C.
3. See Dwg. 20-103.403-36 for Bent Bar Details and Dowel Bar Installation Details.

This document was originally issued and sealed by Colin A. Moran, Registration Number PE 5344, on 08/15/16 and the original document is stored at the North Dakota Department of Transportation

QUANTITIES

SEE DWG 20-103.403-36

BNSF RAILWAY
1 MILE NORTH OF US 2

BNSF Ry. Br.0033-0085.600

PRESTRESSED CONCRETE
FASCIA GIRDERS (SPAN 2)

STATE	PROJECT NUMBER	SECTION NO.	SHEET NO.
ND	NHU-3-020(074)103	170	60

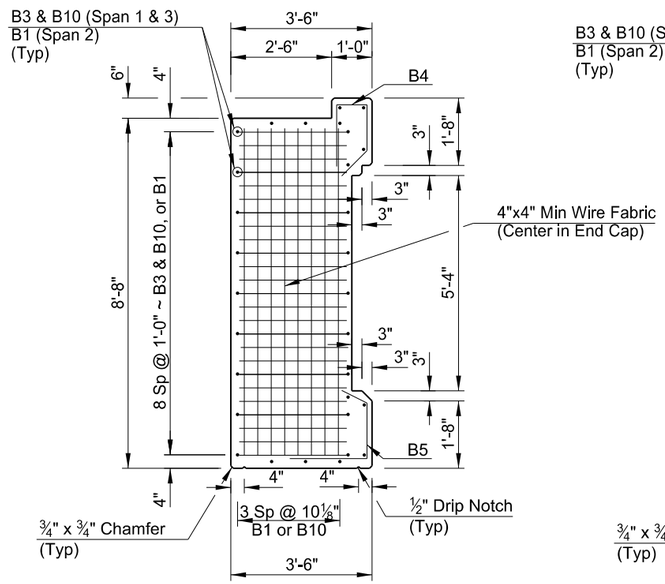

A-A

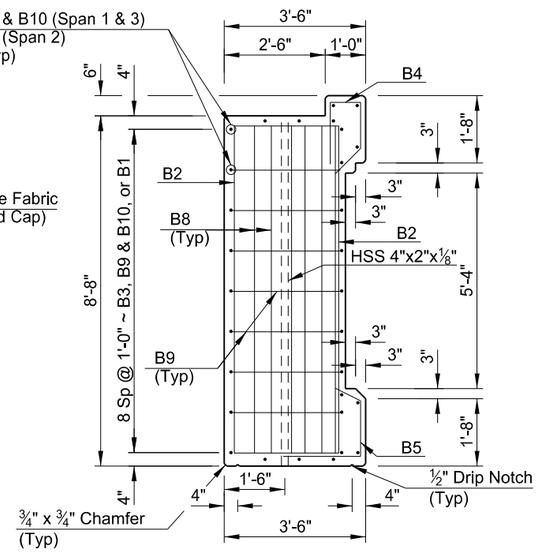

B-B

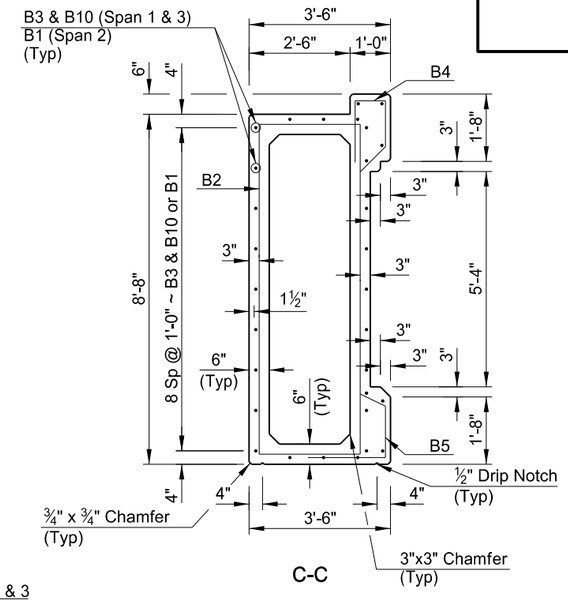

C-C

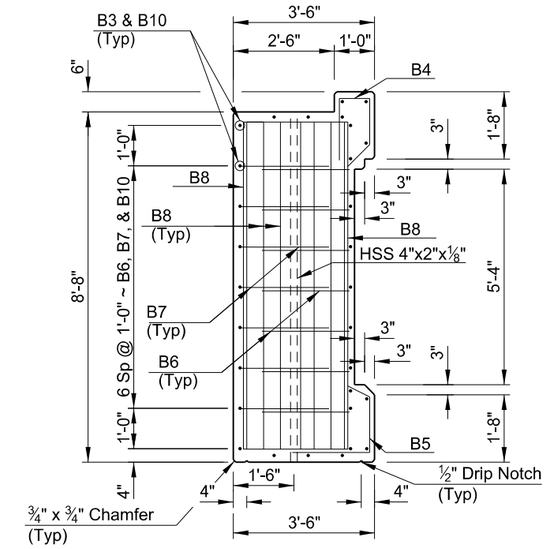

D-D

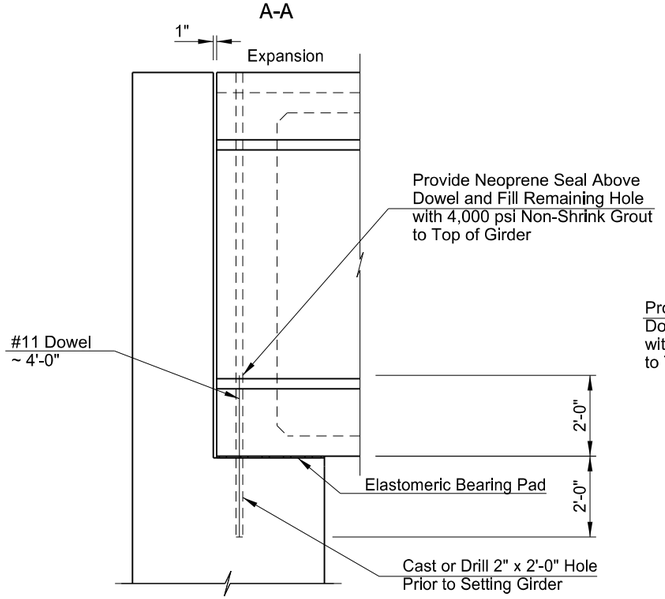

DOWEL BAR INSTALLATION AT ABUTMENTS 1 & 4

(Along Skew)

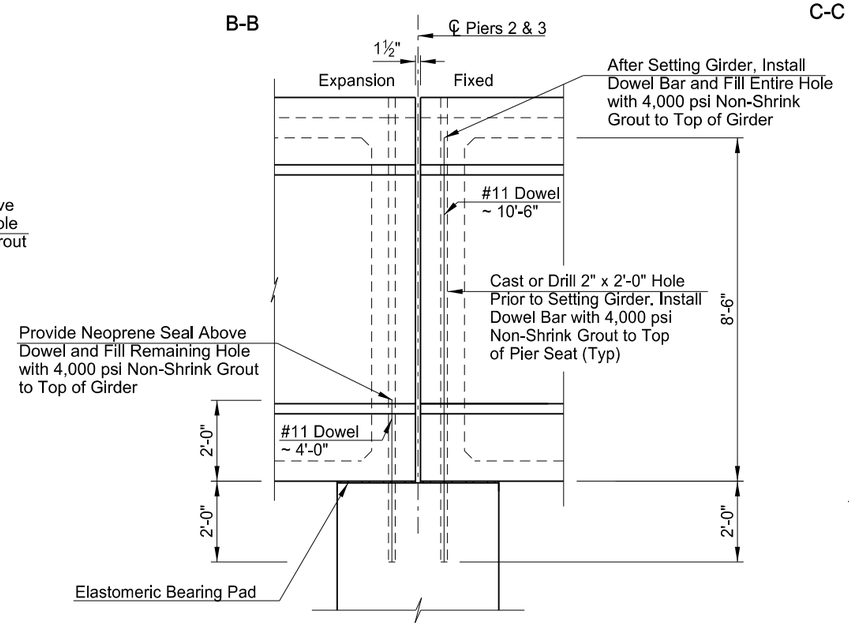

DOWEL BAR INSTALLATION AT PIERS 2 & 3

(Along Skew)

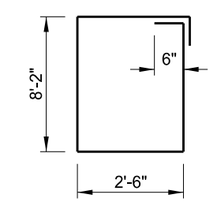

B2

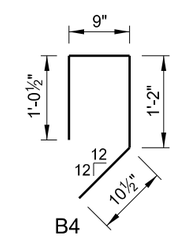

B4

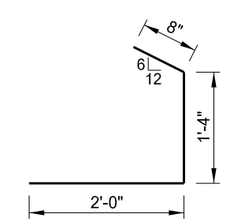

B5

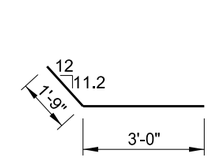

B6

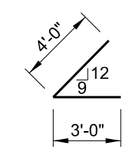

B7

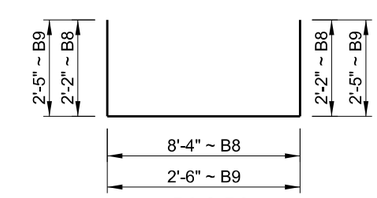

B8 & B9

NOTES:

1. Include the cost to provide the dowels, grout and neoprene seal in the unit price bid for "Prestressed Concrete Fascia Girder".
2. End drip notch 3' before face of substructure.
3. See Dwg 20-103.403-34 and Dwg 20-103.403-35 for Section A-A through D-D locations.
4. At least 14 days prior to the forming and pouring of any beams, the contractor will submit work drawings to the Engineer for review. The work drawings will include the total initial prestress force and the losses in the prestress due to elastic shortening, shrinking, or creeping of concrete and the relaxation of steel stress as determined by the contractor for their method of stressing.
5. Show strand layout, pull down locations, tensioning forces, elongation and any proposed changes in reinforcing steel in the work drawings.
6. Select the final prestress force (remaining after all losses have been accounted for) and its corresponding center of gravity from those on a curve determined by the values shown.
7. Pour girders in all steel forms.
8. All reinforcing steel will have a clearance of 1" unless otherwise noted.
9. Minor changes to the shape of the girder and to the reinforcing steel may be made to accomodate the forms of various contractors and their construction methods with the approval of the Engineer.
10. Provide handling hooks or devices as required by the contractor. Hooks or devices provided will be subject to approval of the Engineer and will be installed within 4'-0" of the end of the girder.

This document was originally issued and sealed by Colin A. Moran, Registration Number PE 5344, on 08/15/16 and the original document is stored at the North Dakota Department of Transportation

QUANTITIES	
PRESTRESSED CONCRETE FASCIA GIRDER	360 LF

BNSF RAILWAY
1 MILE NORTH OF US 2

BNSF Ry. Br.0033-0085.600

PRESTRESSED CONCRETE FASCIA GIRDERS

STATE	PROJECT NUMBER	SECTION NO.	SHEET NO.
ND	NHU-3-020(074)103	170	61

NOTE:
See Dwg 20-103.403-38 for Apron Plate Details

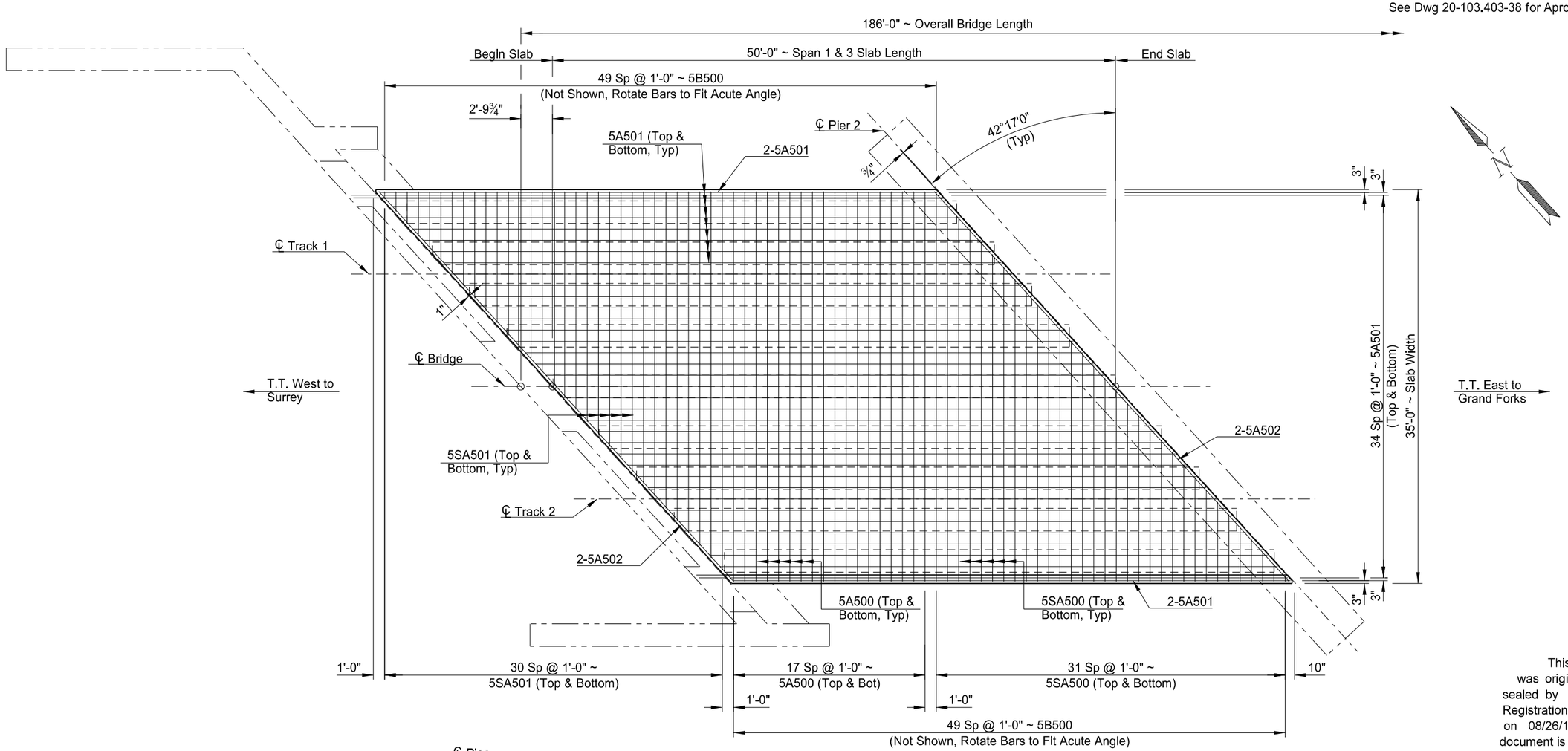

PLAN
(Showing Reinforcing)
(Span 3 Shown, Span 1 Similar)

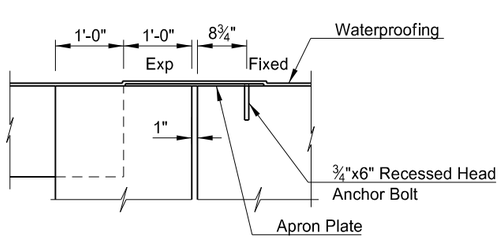

ABUTMENT JOINT SEAL DETAIL
(At Track ℄, Along Skew)

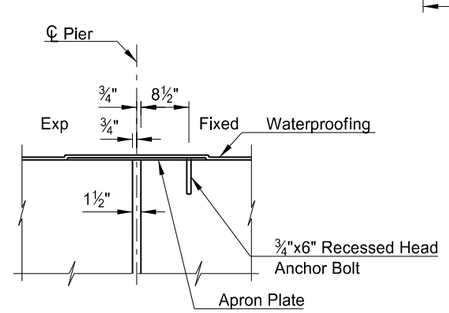

PIER JOINT SEAL DETAIL
(Along Skew)

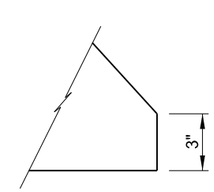

SLAB CORNER DETAIL
(Acute Corners)

This document was originally issued and sealed by Colin A. Moran, Registration Number PE 5344, on 08/26/16 and the original document is stored at the North Dakota Department of Transportation

QUANTITIES
SEE DWG 20-103.403-39

BNSF RAILWAY
1 MILE NORTH OF US 2

BNSF Ry. Br.0033-0085.600

SLAB LAYOUT
SPANS 1 & 3

STATE	PROJECT NUMBER	SECTION NO.	SHEET NO.
ND	NHU-3-020(074)103	170	62

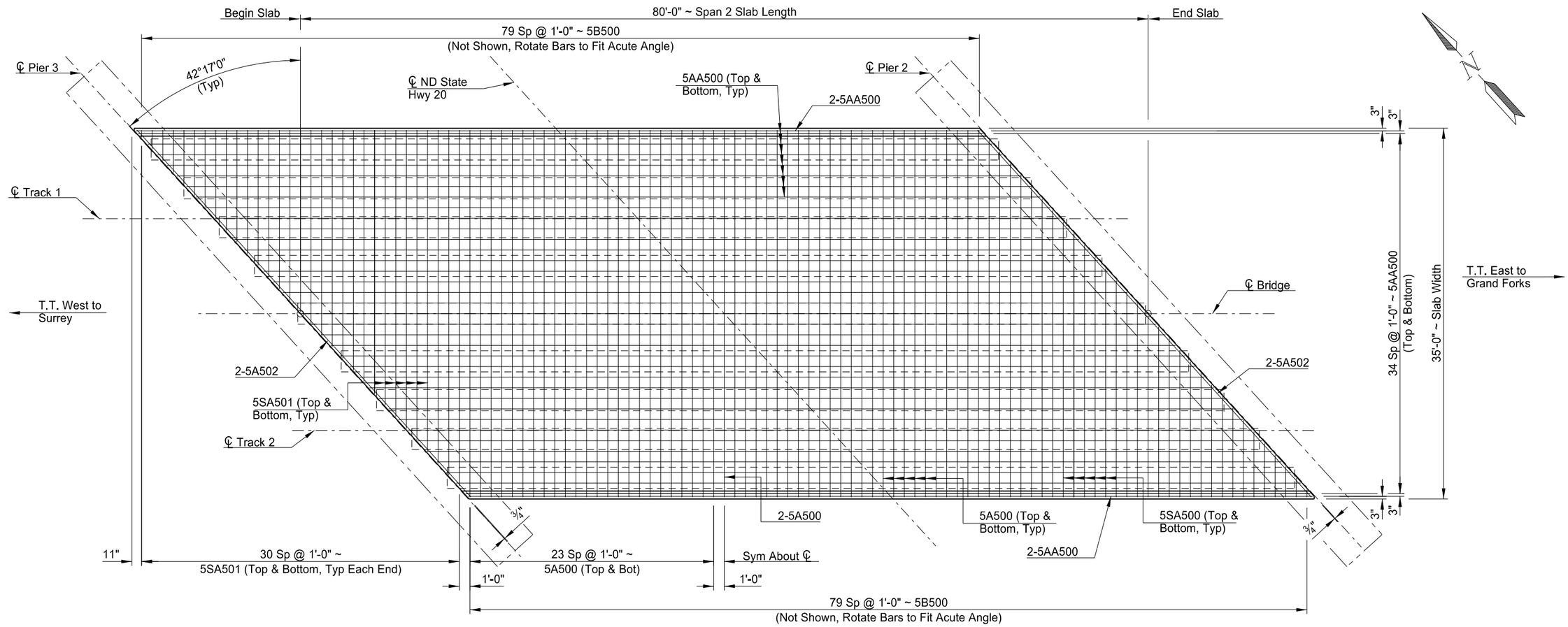

PLAN
(Showing Reinforcing)

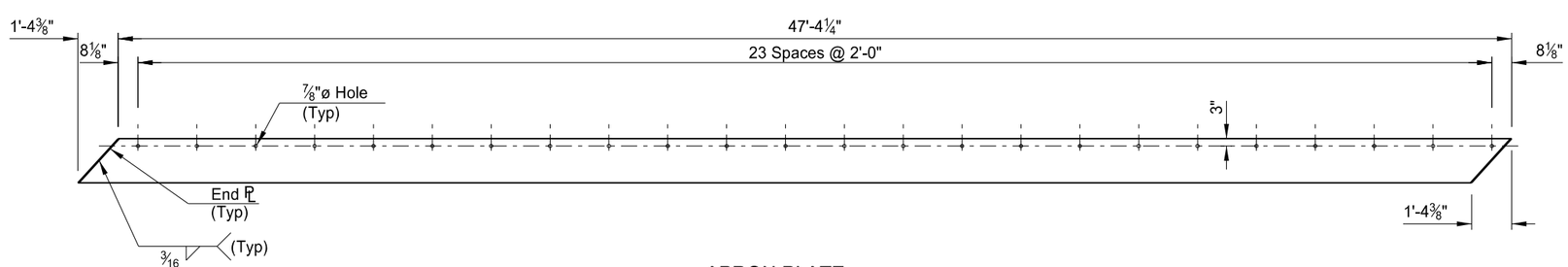

APRON PLATE
Fabricated plate ⅜"x18⅜"
Galvanize after fabrication
Quantity = 4

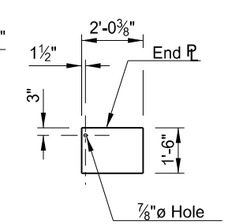

END VIEW
(Other End Reversed)

This document was originally issued and sealed by Colin A. Moran, Registration Number PE 5344, on 08/15/16 and the original document is stored at the North Dakota Department of Transportation

QUANTITIES

SEE DWG 20-103.403-39

NOTE:

See Dwg 20-103.403-37 for Pier Joint Seal Detail and Slab Corner Detail.

BNSF RAILWAY
1 MILE NORTH OF US 2

BNSF Ry. Br.0033-0085.600

SLAB LAYOUT
SPAN 2

STATE	PROJECT NUMBER	SECTION NO.	SHEET NO.
ND	NHU-3-020(074)103	170	63

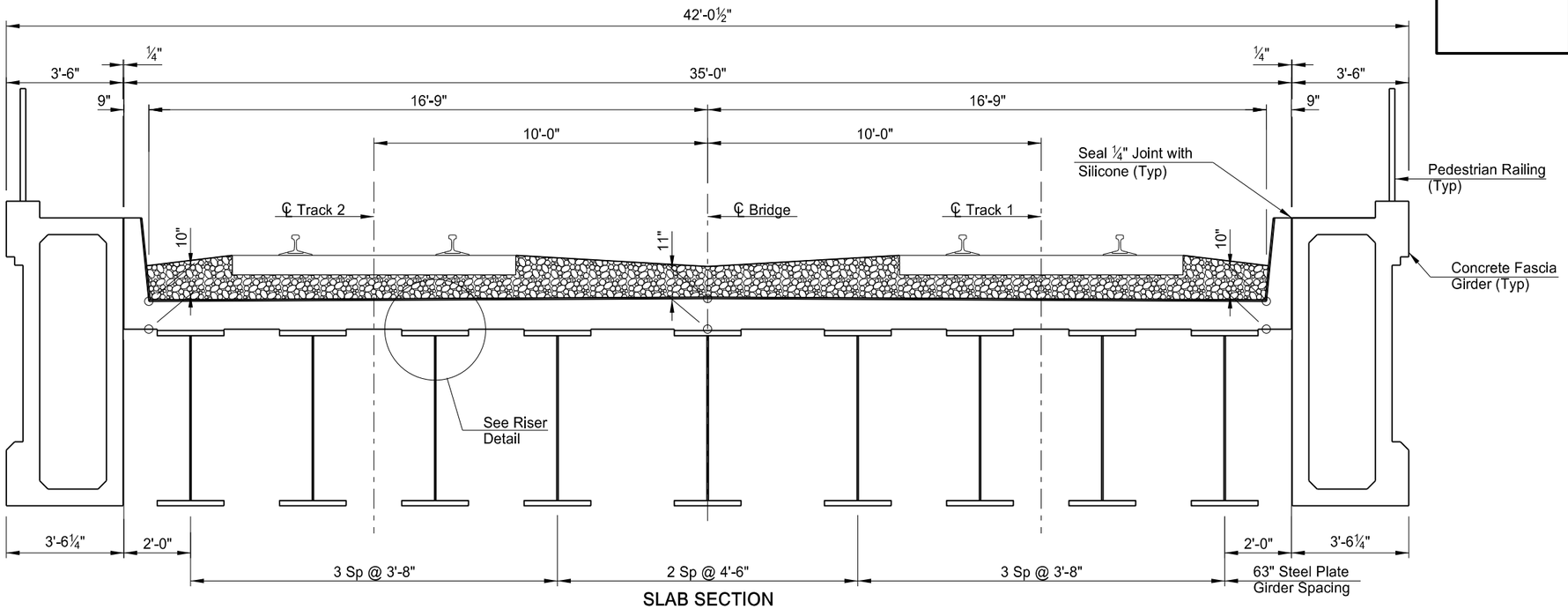

SLAB SECTION
(Showing Dimensions)

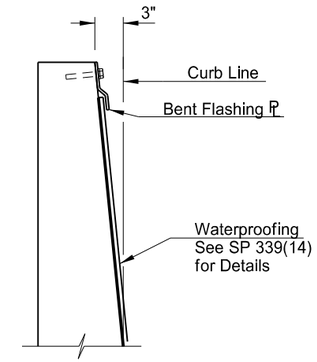

DETAIL "A"

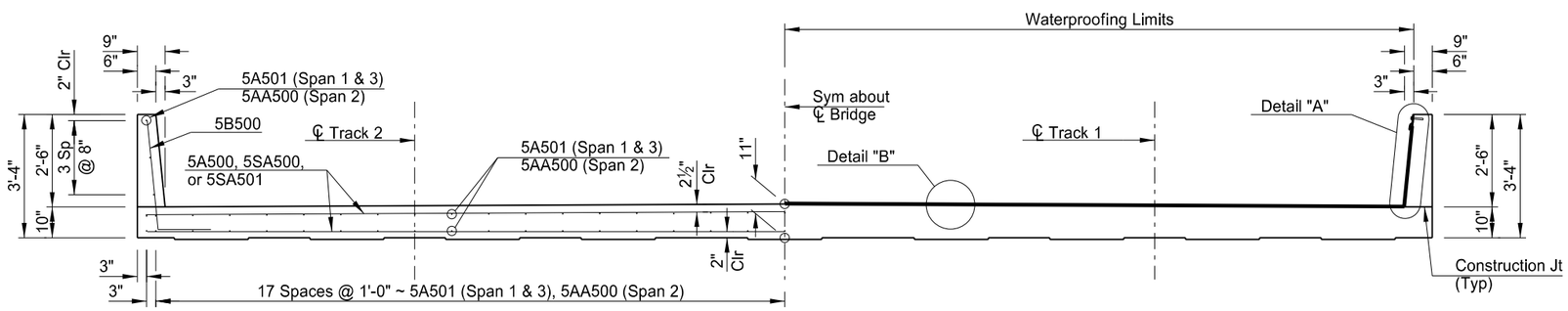

(Showing Reinforcing)

(Showing Waterproofing)

SLAB SECTION

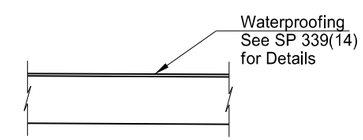

DETAIL "B"

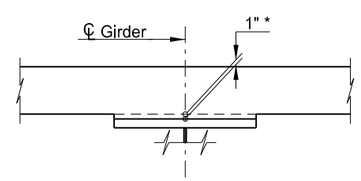

* The 1" dimension shown is located at the supports. The anticipated midspan riser is ½". Adjust the riser to maintain the slab thickness.

RISER DETAIL

NOTES:

1. Span 2 Shown, Span 1 & 3 similar.
2. Construct v-grooves that are ¾" wide and ¾" deep in all faces of the ballast curb at equal spaces per slab not exceeding 10-foot spacing.

This document was originally issued and sealed by Colin A. Moran, Registration Number PE 5344, on 08/15/16 and the original document is stored at the North Dakota Department of Transportation

QUANTITIES	
CLASS AAE-3 CONCRETE	234.0 CY
REINFORCING STEEL	30,485 LBS

BNSF RAILWAY
1 MILE NORTH OF US 2

BNSF Ry. Br.0033-0085.600

SLAB SECTION

STATE	PROJECT NUMBER	SECTION NO.	SHEET NO.
ND	NHU-3-020(074)103	170	64

BILL OF REINFORCING STEEL, GRADE 60

LETTER PREFIX OF BAR MARK DENOTES SHAPE ~ SEE BAR DETAILS

LOCATION	SIZE	MARK	NO. EACH /SET	NOMINAL LENGTH	DETAILING DIMENSIONS a	b	c	d	e	f	g	h	k
ABUTMENT 1	6	AA100	40	73'-0"		60'-0"	3'-7"	13'-0"			69'-5"		
	5	AA101	32	64'-1"		60'-0"	2'-2"	4'-1"			61'-11"		
	5	A100	4	9'-1"									
	6	A101	8	8'-11"									
	9	A102	16	26'-1"									
	5	A103	16	26'-1"									
	5	A104	2	18'-9"									
	5	A105	8	7'-11"									
	5	B100	4	4'-8"		1'-0"	3'-8"						
	6	B102	38	6'-8"		5'-5"	1'-3"						
	5	C100	138	13'-4"		2'-4"	8'-8"	2'-4"					
	6	C101	74	22'-4"		10'-4"	1'-8"	10'-4"					
	6	C102	53	15'-3"		5'-5"	4'-5"	5'-5"					
	5	C103	9	15'-2"		6'-9"	1'-8"	6'-9"					
	5	C104	34	6'-10"		2'-7"	1'-8"	2'-7"					
	5	C105	34	6'-9"		2'-4"	8"	3'-9"					
	5	C106	13	10'-0"		4'-2"	1'-8"	4'-2"					
	5	C107	20	30'-8"		14"-7"	1'-6"	14'-7"					
	5	C108	4	5'-9"		1'-8"	2'-5"	1'-8"					
	6	C112	53	14'-7"		5'-1"	4'-5"	5'-1"					
	5	D100	4	9'-11"		7'-1"	2'-10"					1.6	12
	5	D101	2	18'-0"		1'-4"	16'-8"					10.9	12
	9	D102	15	12'-7"		3'-7"	9'-0"					10.9	12
	11	D103	15	14'-5"		5'-5"	9'-0"					10.9	12
	5	D104	16	4'-11"		3'-8"	1'-3"					10.9	12
	5	D105	4	19'-10"		1'-0"	18'-10"					12	5.1
	5	G100	2	17'-6"	1'-5"	10'-4"	1'-5"	2'-2"				10.9	12
	5	J100	2	18-0"		1'-4"	16'-8"					10.9	12
	9	J101	15	12'-7"		3'-7"	9'-0"					10.9	12
	11	J102	15	14'-5"		5'-5"	9'-0"					10.9	12
	5	J103	16	4'-11"		3'-8"	1'-3"					10.9	12
	5	N100	2	15'-6"	4'-3"	3'-0"	6"					10.9	12
	11	SA100	2	255'-0"	8'-10"	25'-2"			14				
	5	SA101	2	136'-0"	8'-10"	25'-2"			7				
	6	SC100	1	38'-9"	1'-0"	5'-5"	5'-5"	3'-2"	2				
	6	SC101	1	41'-2"	1'-9"	5'-5"	5'-5"	4'-0"	2				
	5	SC102	2	412'-6"	1'-6"	7'-1"	14'-4"	1'-6"	17				
	6	SC103	1	36'-9"	1'-0"	5'-1"	5'-1"	3'-2"	2				
	6	SC104	1	39'-2"	1'-9"	5'-1"	5'-1"	4'-0"	2				
	5	SC105	4	9'-5"	10"	1'-8"	1'-8"	1'-11"	1				

BILL OF REINFORCING STEEL, GRADE 60

LETTER PREFIX OF BAR MARK DENOTES SHAPE ~ SEE BAR DETAILS

LOCATION	SIZE	MARK	NO. EACH /SET	NOMINAL LENGTH	DETAILING DIMENSIONS a	b	c	d	e	f	g	h	k
ABUTMENT 4	5	AA101	8	64'-1"		60'-0"	2'-2"	4'-1"			61'-11"		
	6	AA102	40	83'-3"		60'-0"	3'-7"	23'-3"			79'-8"		
	5	AA103	25	73'-6"		60'-0"	2'-2"	13'-6"			71'-4"		
	5	A100	2	9'-1"									
	6	A101	8	8'-11"									
	9	A102	8	26'-1"									
	5	A103	8	26'-1"									
	5	A104	2	18'-9"									
	5	A105	4	7'-11"									
	5	A106	4	17'-5"									
	9	A107	8	20'-6"									
	5	A108	8	20'-6"									
	5	B100	2	4'-8"		1'-0"	3'-8"						
	5	B101	2	14'-2"		1'-0"	13'-2"						
	6	B102	19	6'-8"		5'-5"	1'-3"						
	5	C100	152	13'-4"		2'-4"	8'-8"	2'-4"					
	6	C101	65	22'-4"		10'-4"	1'-8"	10'-6"					
	6	C102	53	15'-3"		5'-5"	4'-5"	5'-5"					
	5	C103	9	15'-2"		6'-9"	1'-8"	6'-9"					
	5	C104	46	6'-10"		2'-7"	1'-8"	2'-7"					
	5	C105	34	6'-9"		2'-2"	8"	3'-9"					
	5	C106	13	10'-0"		4'-2"	1'-8"	4'-2"					
	5	C107	19	30'-8"		14'-7"	1'-6"	14'-7"					
	5	C108	4	5'-9"		1'-8"	2'-5"	1'-8"					
	7	C109	23	31'-0"		14'-8"	1'-8"	14'-8"					
	7	C110	23	13'-10"		6'-1"	1'-8"	6'-1"					
	5	C111	17	13'-2"		4'-10"	1'-8"	6'-8"					
	6	C112	53	14'-7"		5'-1"	4'-5"	5'-1"					
	5	D100	2	9'-11"		7'-1"	2'-10"					1.6	12
	5	D101	2	18-0"		1'-4"	16'-8"					10.9	12
	9	D102	15	12'-7"		3'-7"	9'-0"					10.9	12
	11	D103	15	14'-5"		5'-5"	9'-0"					10.9	12
	5	D104	16	4'-11"		3'-8"	1'-3"					10.9	12
	5	D105	4	19'-10"		1'-0"	18'-10"					12	5.1
	5	D106	2	19'-4"		16'-6"	2'-10"					0.4	12
	5	G100	2	17'-6"	1'-5"	10'-4"	2'-2"	1'-6"				10.9	12
	5	J100	2	18'-2"		1'-4"	16'-10"					10.9	12
	9	J101	15	12'-7"		3'-7"	9'-0"					10.9	12
	11	J102	15	14'-5"		5'-5"	9'-0"					10.9	12
	5	J103	16	4'-11"		3'-8"	1'-3"					10.9	12
	5	N100	2	15'-6"	4'-3"	3'-0"	6"					10.9	12
	11	SA100	1	255'-0"	8'-10"	25'-2"			14				
	5	SA101	1	136'-0"	8'-10"	25'-2"			7				
	11	SA102	1	171'-3"	3'-3"	19'-7"			14				
	5	SA103	1	91'-4"	3'-3"	19'-7"			7				
	6	SC100	1	38'-9"	1'-0"	5'-5"	5'-5"	3'-2"	2				
	6	SC101	1	41'-2"	1'-9"	5'-5"	5'-5"	4'-0"	2				
	5	SC102	2	412'-6"	1'-6"	7'-1"	14'-4"	1'-6"	17				
	6	SC103	1	36'-9"	1'-0"	5'-1"	5'-1"	3'-2"	2				
	6	SC104	1	39'-2"	1'-9"	5'-1"	5'-1"	4'-0"	2				
	5	SC105	4	9'-5"	10"	1'-8"	1'-8"	1'-11"	1				

NOTES:

1. Fabrication and tolerances shall be in accordance with the CRSI Manual of Standard Practice.
2. All dimensions are out to out of bars.
3. Nominal length of each bent bar or cut bar is the sum total of the detailing dimensions for that bar, unless otherwise noted.
4. Adjacent "AA" bars shall be turned end for end so that the splice locations are staggered.
5. See Dwg 20-103.403-41 for Bent Bar Details.

This document was originally issued and sealed by Colin A. Moran, Registration Number PE 5344, on 08/15/16 and the original document is stored at the North Dakota Department of Transportation

BNSF RAILWAY
1 MILE NORTH OF US 2

BNSF Ry. Br.0033-0085.600

REINFORCING BAR LIST
& DETAILS

STATE	PROJECT NUMBER	SECTION NO.	SHEET NO.
ND	NHU-3-020(074)103	170	65

BILL OF REINFORCING STEEL, GRADE 60

LETTER PREFIX OF BAR MARK DENOTES SHAPE ~ SEE BAR DETAILS

LOCATION		SIZE	MARK	NO. EACH /SET	NOMINAL LENGTH	DETAILING DIMENSIONS a	b	c	d	e	f	g	h	k
PIER	REGULAR	6	A200	34	60'-0"									
		7	A201	30	60'-0"									
		5	A202	28	60'-0"									
		14	A203	224	21'-1"									
		11	A204	56	21'-1"									
		6	A205	32	11'-3"									
		6	A206	8	60'-0"									
		11	A207	32	16'-0"									
		7	A208	32	17'-4"									
		5	A209	32	11'-5"									
		5	A210	32	16'-2"									
		5	A211	128	10'-11"									
		5	A212	64	15'-8"									
		9	A213	12	14'-8"									
		9	A214	9	14'-10"									
		9	A215	12	14'-8"									
		11	B200	56	9'-5"		7'-1"	2'-4"						
		14	B201	224	10'-3"		7'-1"	3'-2"						
		9	B202	120	9'-10"		8'-1"	1'-9"						
		7	C200	968	14'-6"		3'-6"	7'-6"	3'-6"					
		5	C201	176	7'-2"		1'-8"	3'-8"	1'-8"					
		6	C202	96	6'-8"		1'-6"	3'-8"	1'-6"					
		5	C203	176	21'-4"		8'-10"	3'-8"	8'-10"					
		5	C204	112	6'-2"		1'-3"	3'-8"	1'-3"					
		5	C205	16	7'-4"		1'-10"	3'-8"	1'-10"					
		5	C206	32	5'-7"		1'-3"	3'-1"	1'-3"					
		6	N200	134	13'-8"	2'-8"	3'-8"	6"				0	12	
		6	R200	64	4'-1"	1'-6"	1'-1"	1'-6"				12	12	
		5	BD200	4	22'-4"	8'-0"	3'-8"	4'-10"	4'-10"			6"	10.4	12
		9	SA200	1	133'-11"	14'-10"	14'-11"			8				
		9	SA201	2	130'-6"	14'-5"	14'-7"			8				
		5	SC200	4	18'-8"	1'-5"	1'-10"	1'-10"	3'-8"	2				
	EPOXY	9	XA200	12	14'-8"									
		9	XA201	9	14'-10"									
		9	XA202	12	14'-8"									
		9	XSA200	1	133'-11"	14'-10"	14'-11"			8				
		9	XSA201	2	130'-6"	14'-5"	14'-7"			8				
SUPERSTRUCTURE		5	AA500	80	81'-11"		60'-0"	2'-2"	21'-11"	1		79'-9"		
		5	A500	170	34'-8"									
		5	A501	160	49'-9"									
		5	A502	12	46'-11"									
		5	B500	362	5'-0"		2'-8"	2'-0"						
		5	SA500	4	561'-4"	0'-6"	34'-7"			31				
		5	SA501	8	532'-2"	0'-8"	33'-8"			30				

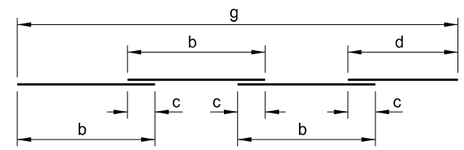

c = Lap Splice (typ)
e = # of "b" Length Pieces in a Set
Total Length per Set = e x b + d

AA

B

* b = Vertical Leg for XB500 and XB501.

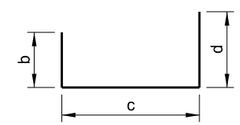

C

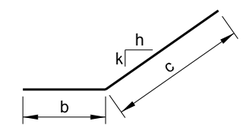

D

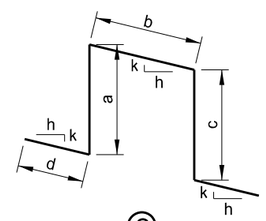

G

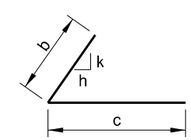

J

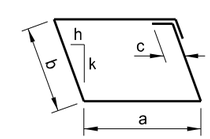

N

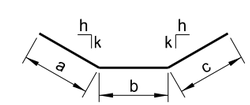

R

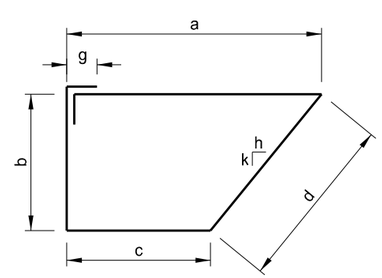

BD

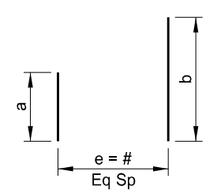

SA

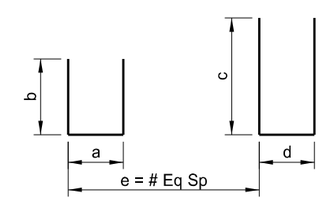

SC

NOTES:

1. Fabrication and tolerances shall be in accordance with the CRSI Manual of Standard Practice.
2. All dimensions are out to out of bars.
3. Nominal length of each bent bar or cut bar is the sum total of the detailing dimensions for that bar, unless otherwise noted.
4. Adjacent "AA" bars shall be turned end for end so that the splice locations are staggered.

This document was originally issued and sealed by Colin A. Moran, Registration Number PE 5344, on 08/15/16 and the original document is stored at the North Dakota Department of Transportation

BNSF RAILWAY
1 MILE NORTH OF US 2

BNSF Ry. Br.0033-0085.600

REINFORCING BAR LIST & DETAILS

STATE	PROJECT NUMBER	SECTION NO.	SHEET NO.
ND	NHU-3-020(074)103	170	66

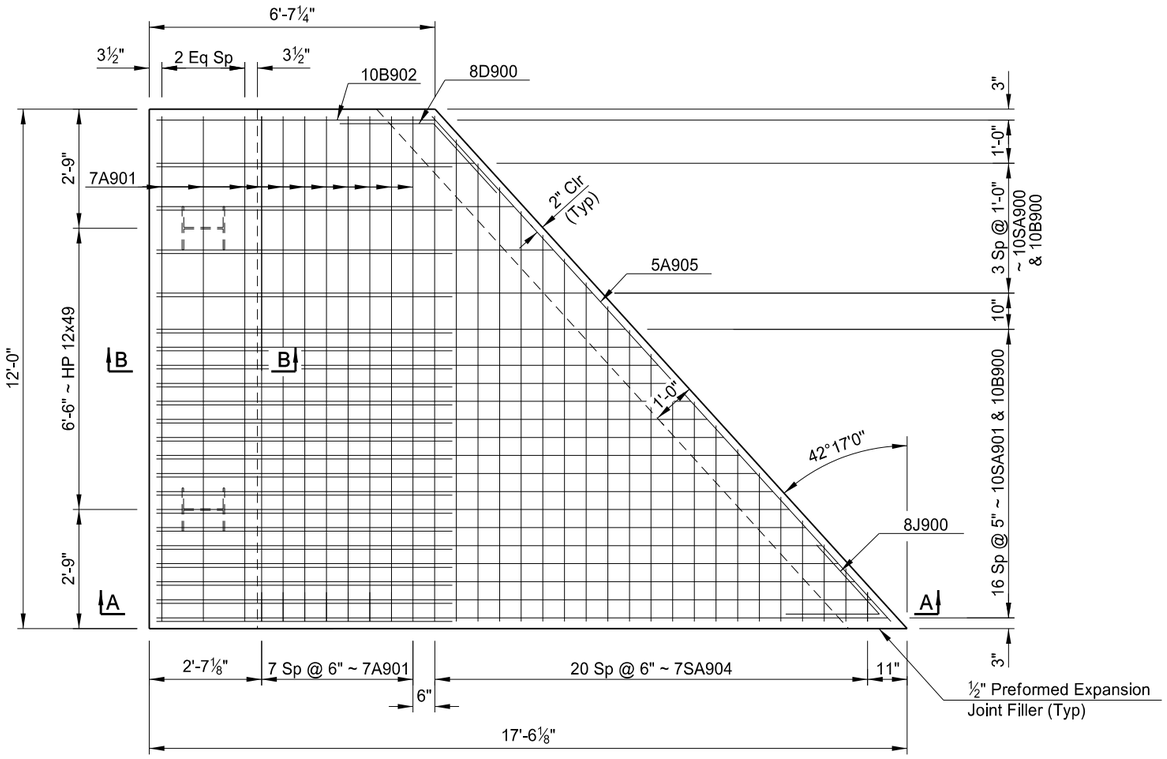

PLAN
(Showing Top Reinforcing)

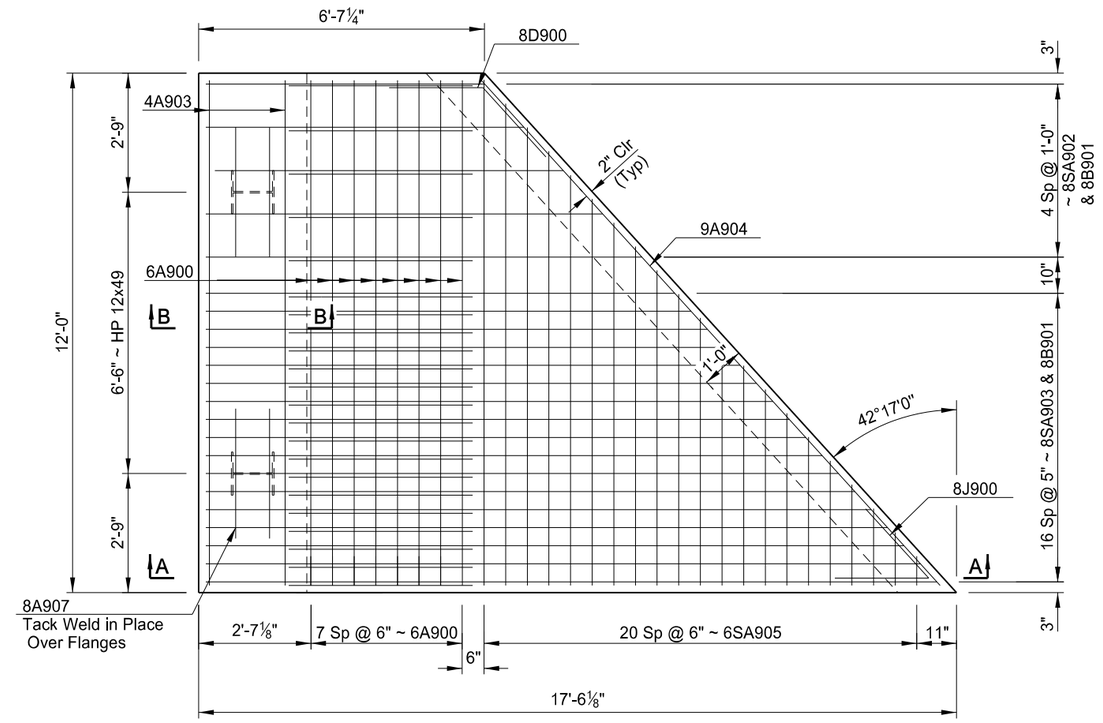

PLAN
(Showing Bottom Reinforcing)

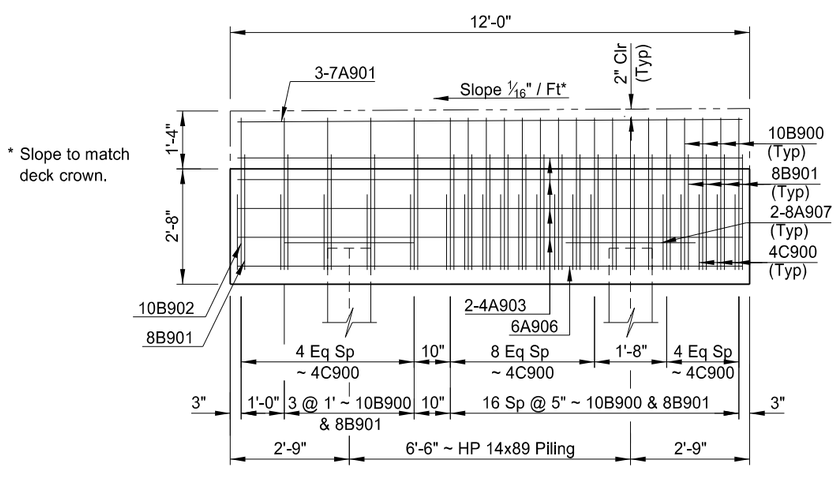

* Slope to match deck crown.

FOOTING ELEVATION

This document was originally issued and sealed by Colin A. Moran, Registration Number PE 5344, on 08/15/16 and the original document is stored at the North Dakota Department of Transportation

QUANTITIES

SEE DWG 20-103.403-43

NOTE:
See Dwg 20-103.403-43 for Sections A-A and B-B.

BNSF RAILWAY
1 MILE NORTH OF US 2

BNSF Ry. Br.0033-0085.600

APPROACH SLAB DETAILS

STATE	PROJECT NUMBER	SECTION NO.	SHEET NO.
ND	NHU-3-020(074)103	170	67

SKEW ANGLE = 42°17' 0"

BAR LIST - (PER SLAB)

SIZE	MARK	NO.	LENGTH
6	A900	8	11'-8"
7	A901	8	11'-8"
6	A902	2	6'-2"
4	A903	8	11'-8"
9	A904	1	15'-9"
5	A905	1	15'-9"
6	A906	4	11'-8"
8	A907	4	3'-0"
6	A908	4	2'-4"
10	B900	21	10'-4"
8	B901	22	6'-11"
10	B902	1	9'-11"
4	C900	19	5'-8"
8	D900	2	6'-6"
8	J900	2	6'-6"
10	SA900	1	34'-8"
10	SA901	1	234'-6"
8	SA902	1	41'-1"
8	SA903	1	234'-6"
7	SA904	1	129'-6"
6	SA905	1	129'-6"

ESTIMATED MATERIAL QUANTITIES

REINFORCING STEEL (LBS)	CONCRETE (CY)
4,475	10.1

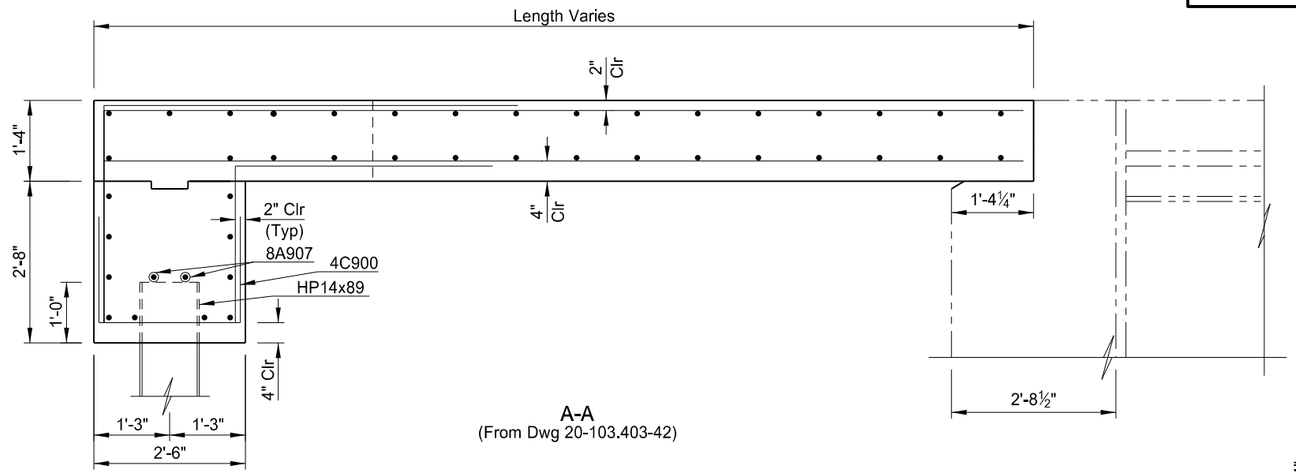

A-A
(From Dwg 20-103.403-42)

NOTE:

The estimated quantities shown are for information purposes only. All materials including concrete, reinforcing bars, preformed joint filler, silicone sealant, and all labor required to build the approach slabs are included in the unit price bid item, "Pile Supported Approach Slab." The concrete will be Class AAE-3. The reinforcing steel will be Grade 60.

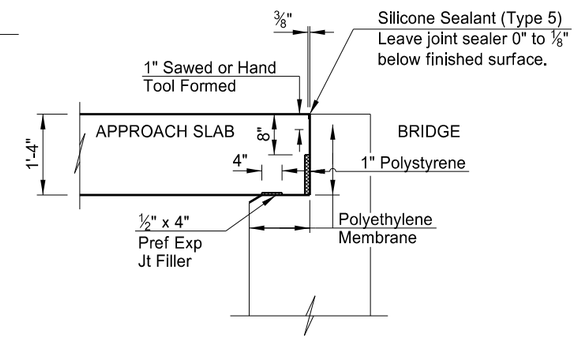

APPROACH SLAB JOINT DETAIL
(Along Skew)

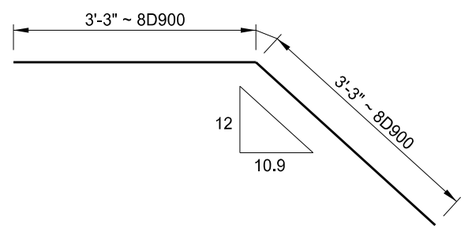

8D900

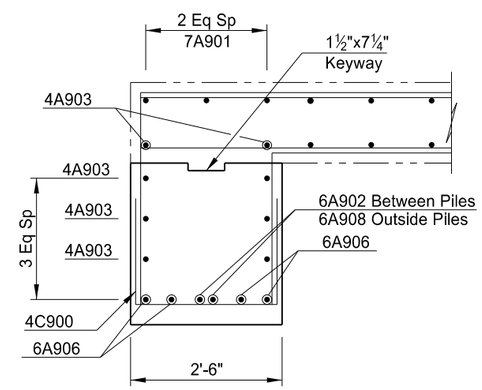

B-B
(From Dwg 20-103.403-42)

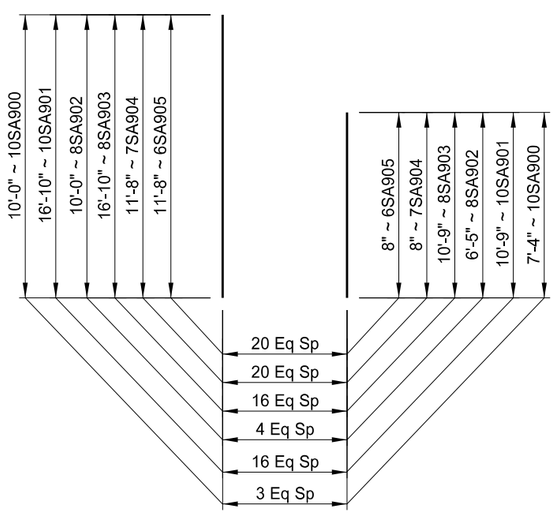

10SA900, 10SA901, 8SA902, 8SA903, 5SA904, 6SA905

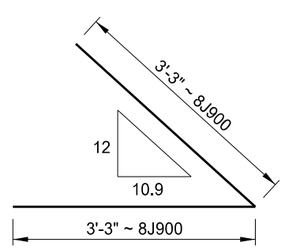

8J900

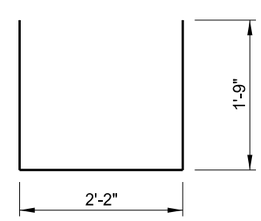

4C900

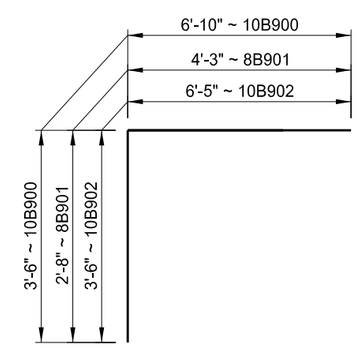

10B900, 8B901 & 10B902

This document was originally issued and sealed by Colin A. Moran, Registration Number PE 5344, on 08/15/16 and the original document is stored at the North Dakota Department of Transportation

QUANTITIES	(ONE APPROACH SLAB)
PILE SUPPORTED APPROACH SLAB	16.1 SY

BNSF RAILWAY
1 MILE NORTH OF US 2

BNSF Ry. Br.0033-0085.600

APPROACH SLAB DETAILS

STATE	PROJECT NUMBER	SECTION NO.	SHEET NO.
ND	NHU-3-020(074)103	170	68

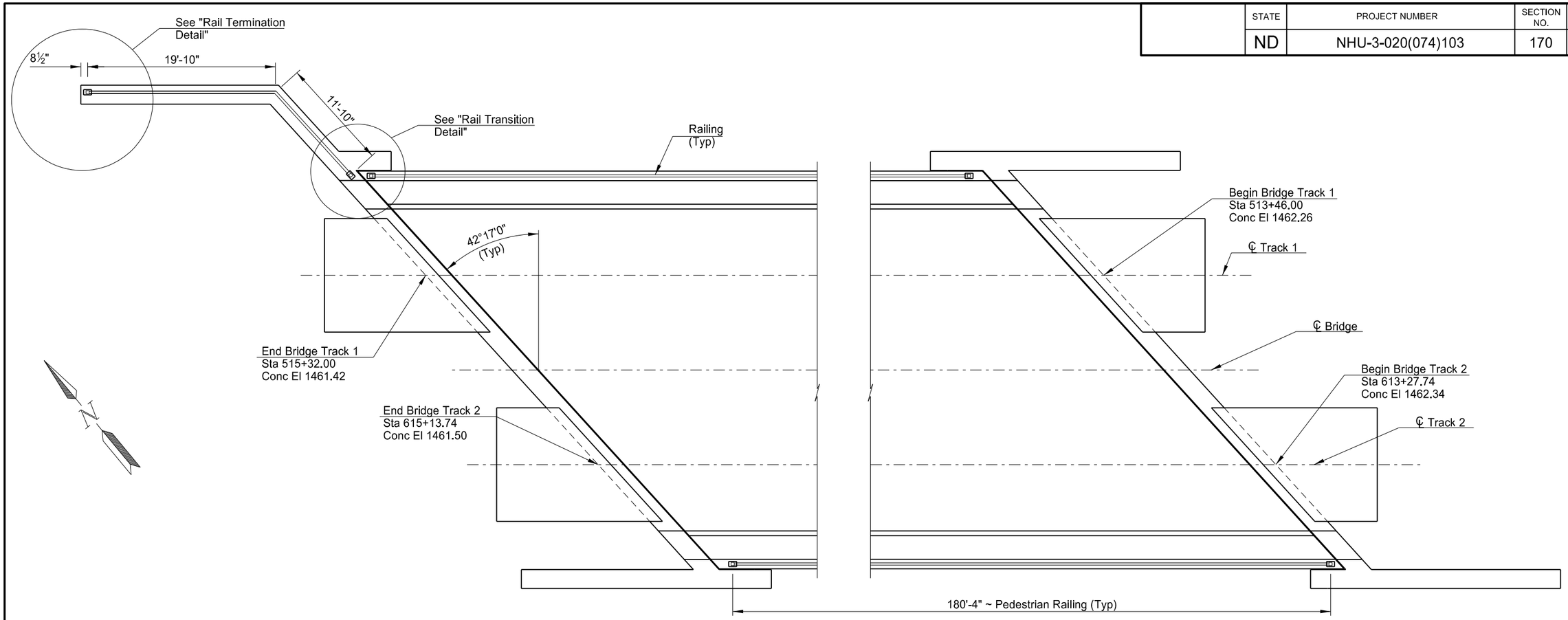

RAIL PLAN

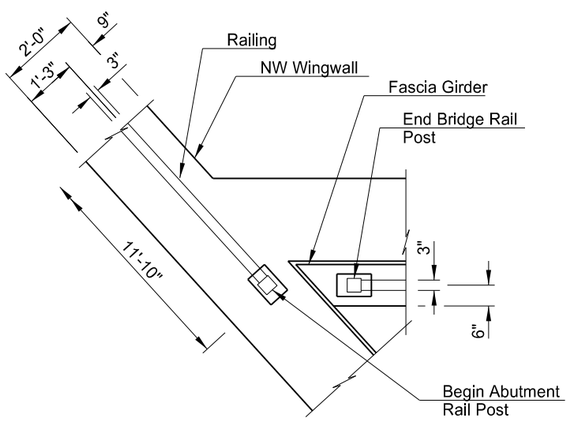

RAIL TRANSITION DETAIL

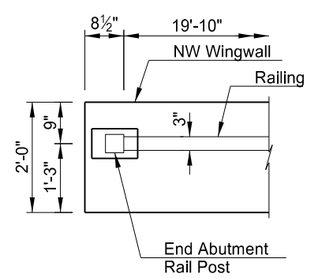

RAIL TERMINATION DETAIL

NOTE:
See Dwg 20-103.403-45 for Post and Railing Details.

This document was originally issued and sealed by Colin A. Moran, Registration Number PE 5344, on 08/15/16 and the original document is stored at the North Dakota Department of Transportation

QUANTITIES
SEE DWG 20-103.403-45

BNSF RAILWAY
1 MILE NORTH OF US 2

BNSF Ry. Br.0033-0085.600

PEDESTRIAN RAILING DETAILS

STATE	PROJECT NUMBER	SECTION NO.	SHEET NO.
ND	NHU-3-020(074)103	170	69

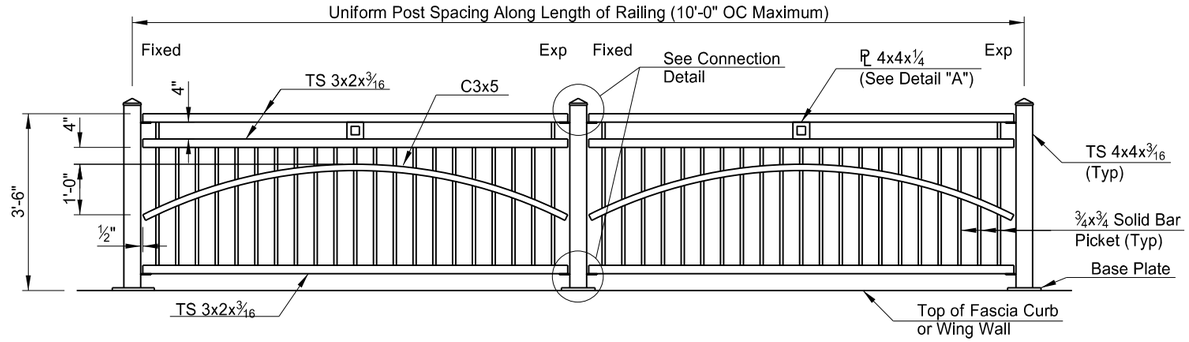

INSIDE ELEVATION OF RAILING
(Showing Typical Dimensions)

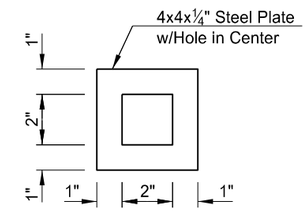

DETAIL "A"

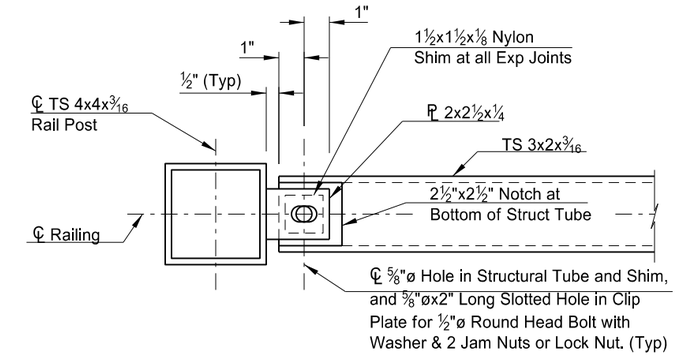

A-A

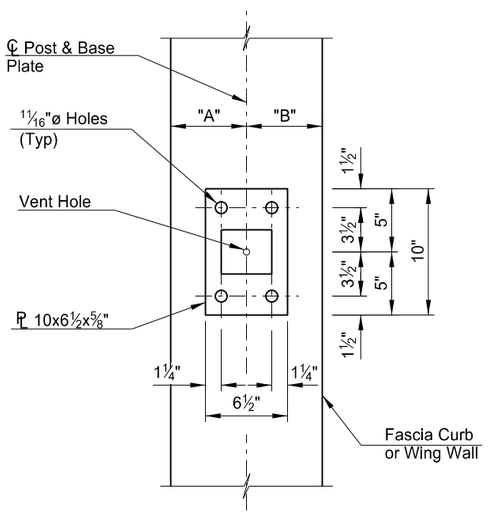

BASE PLATE PLAN

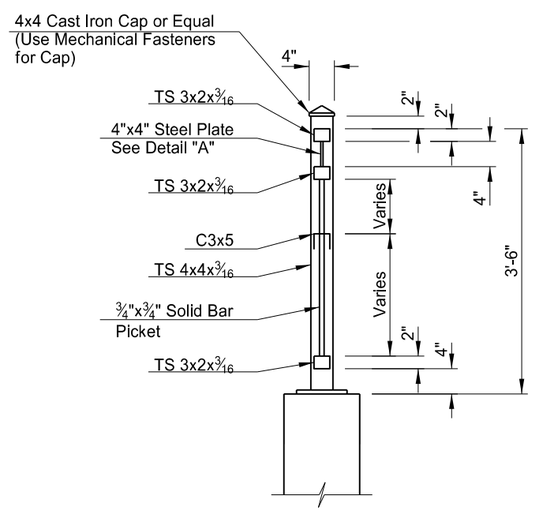

SECTION THROUGH RAILING

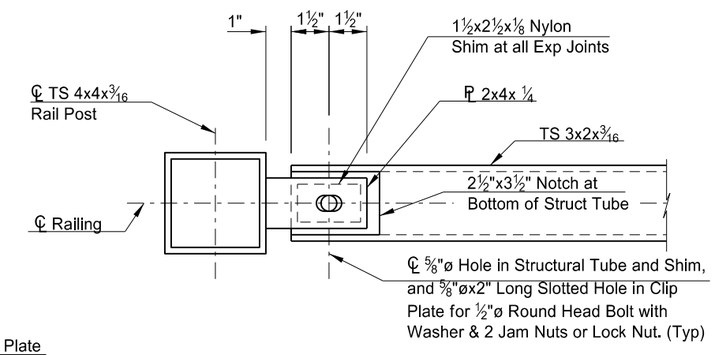

A-A @ EXPANSION JOINT

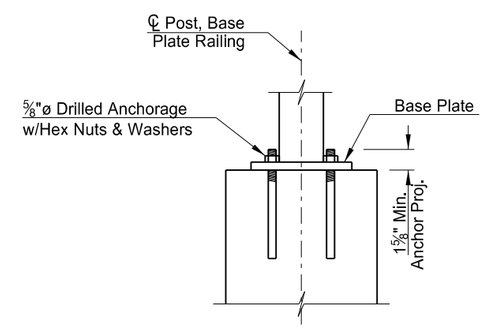

RAIL ANCHOR DETAIL

LOCATION	"A"	"B"
FASCIA CURB	6"	6"
WING WALL	1'-3"	9"

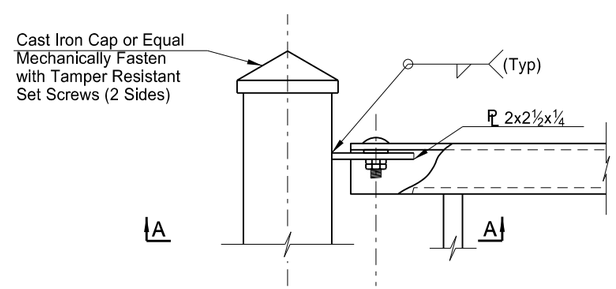

TYPICAL CONNECTION DETAIL

NOTES:

1. See Dwg 20-103.403-44 for railing locations.
2. Included all pieces required for the fabrication or connection of the railing in the unit price bid "Pedestrian Railing".
3. Design railing anchor bolts to resist a tensile force of 9000 lbs.

This document was originally issued and sealed by Colin A. Moran, Registration Number PE 5344, on 08/15/16 and the original document is stored at the North Dakota Department of Transportation

QUANTITIES	(BRIDGE ONLY)
PEDESTRIAN RAILING	392.4 LF

BNSF RAILWAY
1 MILE NORTH OF US 2

BNSF Ry. Br.0033-0085.600

PEDESTRIAN RAILING DETAILS

STATE	PROJECT NUMBER	SECTION NO.	SHEET NO.
ND	NHU-3-020(074)103	170	70

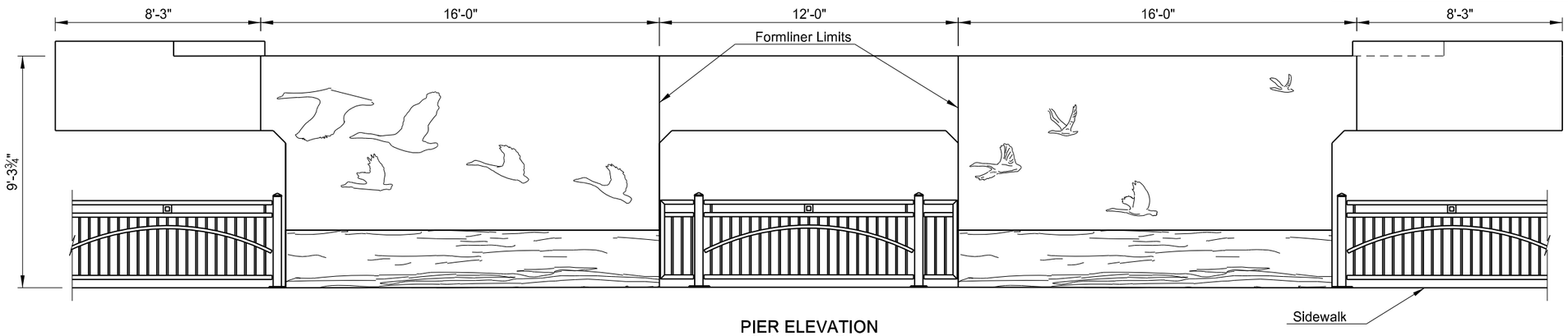

PIER ELEVATION
(Both Sides of Piers)

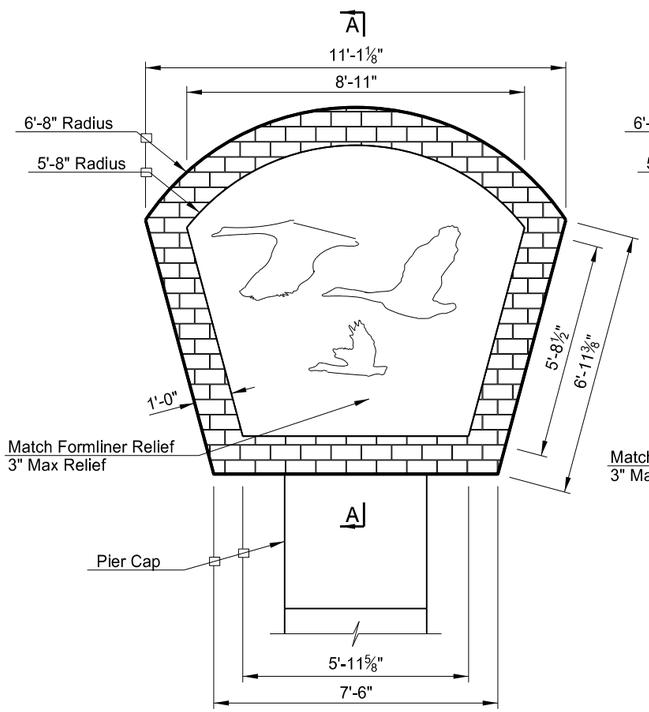

MEDALLION ELEVATION VIEW
(Pier 2)

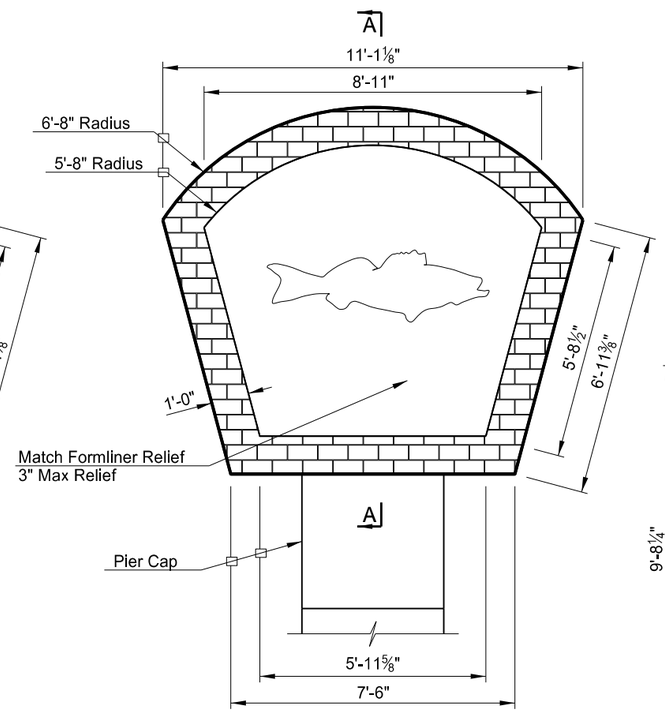

MEDALLION ELEVATION VIEW
(Pier 3)

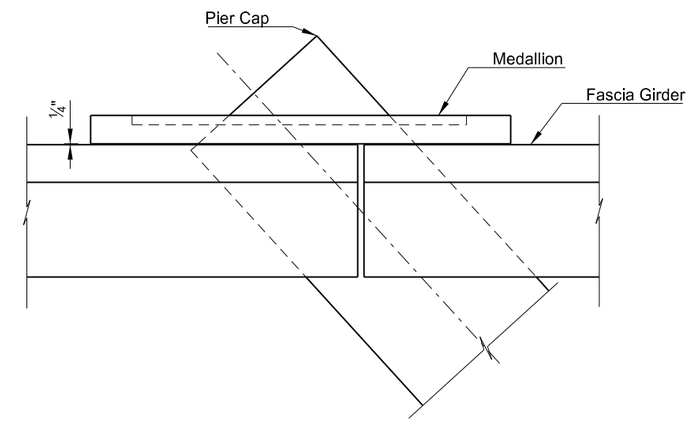

MEDALLION PLAN LOCATION

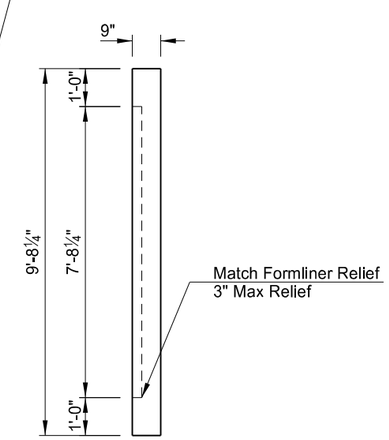

A-A

NOTES:

1. See Section 20, Sheet 39 for Railing Details. Railing shown is included in the unit price bid item, "Pedestrian Railing", shown in Section 20.
2. Geese and Water formliner is CFL-SP002A as manufactured by Creative Form Liners, INC., 3411 Windom Road, Brentwood, MD 20722, (301) 864-3676.
3. Include the cost to furnish and installing the formliner in the unit bid price item "Class AAE-3 Concrete".
4. Fabricate the medallions with an expanded polystyrene foam and a protective polyurea coating, or approved equal.
5. Geese pattern on medallion will match the formliner on the pier, with the same maximum relief of 3". Contractor will develop a walleye pattern for the medallion with the maximum relief of 3" and submit to the Engineer. Contractor will develop a brick pattern for the medallion border with a maximum relief of 1" and submit to the Engineer. Paint Medallion color No. 27722 (Light Gray) in accordance with the Federal Standard No. 595B.
6. Submit work drawings to the Engineer for the formliner 28 days prior to construction of the pier. Submit work drawings to the Engineer for the medallion 28 days prior to the fabrication of the fascia girder and fabrication of the medallions.
7. Include the cost to furnish and install the medallions in the unit price bid item "Pier Medallion".

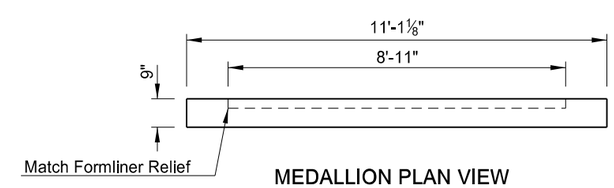

MEDALLION PLAN VIEW

This document was originally issued and sealed by Colin A. Moran, Registration Number PE 5344, on 08/26/16 and the original document is stored at the North Dakota Department of Transportation

BNSF RAILWAY
1 MILE NORTH OF US 2

BNSF RY. Br.0033-0085.600

AESTHETIC DETAILS

STATE	PROJECT NO.	SECTION NO.	SHEET NO.
ND	NHU-3-020(074)103	175	1

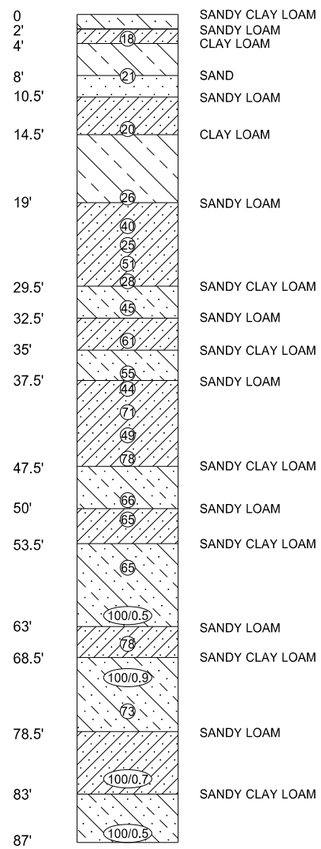

SB-1A
Sta 5458+33
47' LT
(12/9/2014)

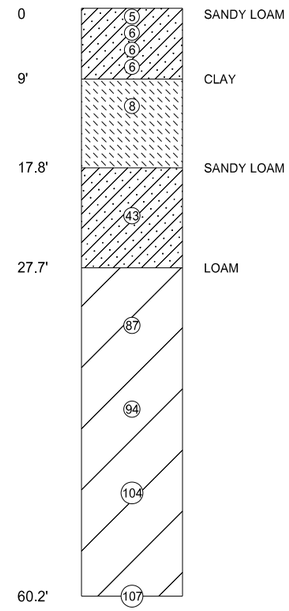

SB-1
Sta 5459+50
20' LT
(6/13/1979)

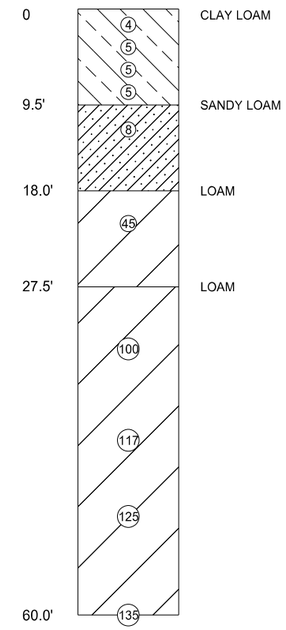

SB-2
Sta 5459+04
35' RT
(6/12/1979)

NOTES:

1. The encircled numbers indicate the number of blows delivered by a 140 lb. automatic hammer from a height of 30" to drive a 2" o.d. split-barrel sampler 1'-0".

2. The boring data shown is for owner's design and estimating purposes only. The boring logs are only representative of the exact location from which the samples were taken and interpretation between sample locations is discouraged. The owner assumes no responsibility if the soil conditions encountered during construction differ from those shown.

This document was originally issued and sealed by Colin A. Moran, Registration Number PE- 5344, on 08/15/16 and the original document is stored at the North Dakota Department of Transportation

BNSF RAILWAY
1 MILE NORTH OF US 2

BNSF Ry. Br.0033-0085.600

SOIL BORINGS 1A, 1, 2

STATE	PROJECT NO.	SECTION NO.	SHEET NO.
ND	NHU-3-020(074)103	175	2

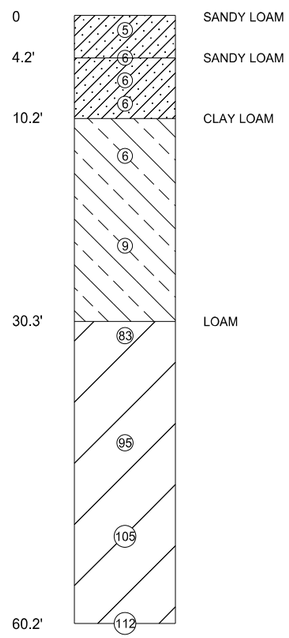

SB-3
Sta 5458+13
35' RT
(6/14/1979)

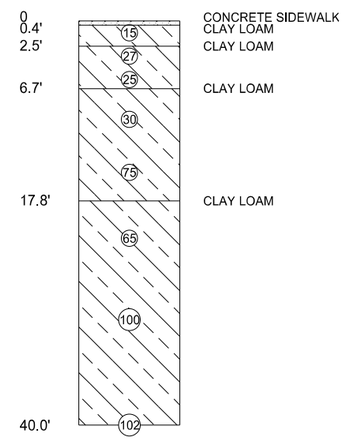

SB-4
Sta 5460+90
43' LT
(10/2/1979)

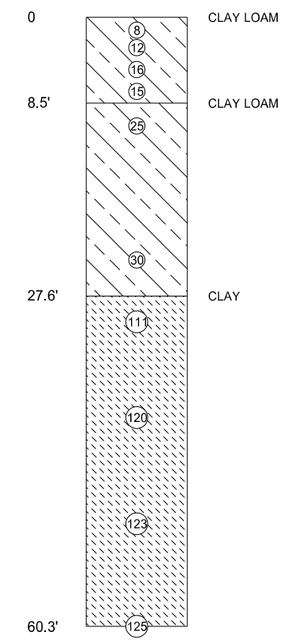

SB-5
Sta 5459+60
25' RT
(10/3/1979)

This document was originally issued and sealed by Colin A. Moran, Registration Number PE- 5344, on 08/15/16 and the original document is stored at the North Dakota Department of Transportation

NOTES:

1. The encircled numbers indicate the number of blows delivered by a 140 lb. automatic hammer from a height of 30" to drive a 2" o.d. split-barrel sampler 1'-0".

2. The boring data shown is for owner's design and estimating purposes only. The boring logs are only representative of the exact location from which the samples were taken and interpretation between sample locations is discouraged. The owner assumes no responsibility if the soil conditions encountered during construction differ from those shown.

BNSF RAILWAY
1 MILE NORTH OF US 2

BNSF Ry. Br.0033-0085.600

SOIL BORINGS 3-5