NO. 7

NORTH DAKOTA
DEPARTMENT OF TRANSPORTATION

REQUEST FOR PROPOSAL

URBAN PROJECT NO. SU-3-982(031)035 (PCN-21609) and URBAN FEDERAL AID PROJECT NOS. NHU-3-019(044)155 (PCN-17505) and NHU-3-020(074)103 (PCN-17504)

FHWA Project of Division Interest (PODI)

1.222 Miles

GRADING, SURFACING, STORM DRAIN, BRIDGES, RAILROAD EMBANKMENT, RAILROAD BALLAST, LIGHTING, TRAFFIC SIGNAL, MARKING, CONCRETE SIDEWALK, RETAINING WALL, AND INCIDENTALS

DEVILS LAKE 6TH AVE NE(1ST ST NE-6TH ST NE) & 6TH ST NE(COLLEGE DR-6TH AVE NE); DEVILS LAKE ND19 (3RD AVENUE NW TO ND20); and DEVILS LAKE COLLEGE DRIVE (3RD STREET TO 6TH STREET)

RAMSEY COUNTY

DBE Race Conscious Goal - 10.00%

BID OPENING: The bidder's proposal will be accepted via the Bid Express on-line bidding exchange at www.bidx.com until **09:30AM Central Time on October 14, 2016.**

Prior to submitting a Proposal, the Bidder shall complete all applicable sections and properly execute the Proposal Form in accordance with the specifications.

Proposal Form of:

_____
(Firm Name)

_____
(Address, City, State, Zipcode)

(For official use only)

PAGE INTENTIONALLY LEFT BLANK

Projects: SU-3-982(031)035 (PCN-21609), NHU-3-019(044)155 (PCN-17505), and NHU-3-020(074)103 (PCN-17504)

The company, firm, corporation, or individual hereby acknowledges that it has designated a responsible person or persons as having the authority to obligate the company, firm, or individual, through electronic or paper submittal, to the terms and conditions described herein and in the contract documents. The designated responsible person submitting this proposal shall be hereafter known as the bidder. By submitting this proposal, the bidder fully accepts and agrees to all the provisions of the proposal. The bidder also certifies that the information given in this proposal is true and the certifications made in this proposal are correct.

The bidder acknowledges that they have thoroughly examined the plans, proposal form, specifications, supplemental specifications, special provisions and agrees that they constitute essential parts of this proposal.

The bidder acknowledges that all line items which contain a quantity shall have a unit price bid. Any line item which is bid lump sum shall contain a lump sum bid price.

The bidder acknowledges that they understand that the quantities of work required by the plans and specifications are approximate only and are subject to increases and decreases; the bidder understands that all quantities of work actually required must be performed and that payment therefore shall be at the prices stipulated herein; that the bidder proposes to timely furnish the specified materials in the quantities required and to furnish the machinery, equipment, labor and expertise necessary to competently complete the proposed work in the time specified.

NON-COLLUSION AND DEBARMENT CERTIFICATION

The bidder certifies that neither he/she, nor any official, agent or employee of the bidder has entered into any agreement, participated in any collusion, or otherwise taken any action which is in restraint of free competitive bidding in connection with this bid.

By submitting this proposal, the bidder certifies to the best of his/her knowledge and belief that he/she and his/her principles:

a. Are not presently debarred, suspended, proposed for debarment, declared ineligible, or voluntarily excluded from covered transactions by any Federal Department or agency;
b. Have not within a three-year period preceding this proposal been convicted of or had a civil judgment rendered against them for commission of fraud or a criminal offense in connection with obtaining, attempting to obtain, or perform a public (Federal, State or Local) transaction or contract under a public transaction; violation of Federal or State antitrust statutes or commission of embezzlement, theft, forgery, bribery, falsification or destruction of records; making false statements; or receiving stolen property

c. Are not presently indicted for or otherwise criminally or civilly charged by a governmental entity (Federal, State or Local) with commission of any of the offenses enumerated in paragraph b. of the certification; and
d. Have not within a three-year period preceding this proposal had one or more public transactions (Federal, State or Local) terminated for cause or default

Where the prospective bidder is unable to certify to any of the statements in this certification, the bidder shall submit an explanation in the blanks provided herein. The explanation will not necessarily result in denial of participation in a contract:

Explanation:_____
_____
_____
_____

If the prequalified bidder's status changes, he/she shall immediately submit a new fully executed non-collusion affidavit and debarment certification with an explanation of the change to the Contract Office prior to submitting the bid.

Failure to furnish a certification or an explanation will be grounds for rejection of a bid.

BID LIMITATION (Optional)

The bidder who desires to bid on more than one project on which bids are to be opened on the same date, and who also desires to avoid receiving an award of more projects than the bidder is equipped to handle, may bid on multiple projects and limit the total amount of work awarded to the bidder on selected projects by completing the "Bid Limitation".

The Bid Limitation must be filled in on each proposal form for which the Bidder desires protection. Each such proposal must be covered by a proposal guaranty.

The bid limitation can be made by declaring the total dollar value of work OR total number of projects a bidder is willing to perform.

The Bidder desires to disqualify all of his/her bids on this bid opening that exceed a total dollar value of

$_____

OR

that exceed a total number of _____ projects.

The Bidder hereby authorizes the Department to determine which bids shall be disqualified.

Projects: SU-3-982(031)035 (PCN-21609), NHU-3-019(044)155 (PCN-17505), and NHU-3-020(074)103 (PCN-17504)

PERMISSIBLE DISCOUNT (optional)

Only when invited to do so in the Request for Proposal by Special Provision, Bidders are permitted to offer a discount on a specific project (discount project) if they are awarded the contract on one or more additional projects bid at the same bid opening time and date. The bidder must present the proposal so that it can be considered with or without the discount. The bid or discount offered on the "discount project" will not affect the determination of the low bid of any other project.

When discounts are offered, they must be presented as a reduction in the unit price for one or more items of work in the specified proposal (discount project).

Space for Offering Discounts:
_____
_____
_____

Item No:_____

Description:_____

Unit:_____

Proposal Quantity:_____ Unit Price Reduction: $_____ Discount: $_____

Item No:_____

Description:_____

Unit:_____

Proposal Quantity:_____ Unit Price Reduction: $_____ Discount: $_____

Item No:_____

Description:_____

Unit:_____

Proposal Quantity:_____ Unit Price Reduction: $_____ Discount: $_____

TOTAL DISCOUNT_____

It is understood that the discount will only apply if awarded under the conditions as listed above and signed by the bidder.

Projects: SU-3-982(031)035 (PCN-21609), NHU-3-019(044)155 (PCN-17505), and NHU-3-020(074)103 (PCN-17504)

RECEIPT OF ADDENDA ACKNOWLEDGEMENT

We hereby acknowledge receipt of the following addenda:

Addendum #_____ Dated_____

Addendum #_____ Dated_____

Addendum #_____ Dated_____

Addendum #_____ Dated_____

Addendum #_____ Dated_____

Addendum #_____ Dated_____

PROPOSAL GUARANTY

A proposal guaranty is required. The proposal guaranty must comply with Section 102.09, "Proposal Guarantee" of the Standard Specifications.

TYPE OF PROPOSAL GUARANTY APPLIED TO THIS PROJECT (Check one):

_____ Annual Bid Bond*

_____ Single Project Bid Bond

_____ Certified or Cashier's Check

*Annual Bid Bond is required when submitting proposals electronically

DISADVANTAGED BUSINESS ENTERPRISE PARTICIPATION (RGC)

North Dakota Department of Transportation, Civil Rights Division
SFN 52750 (Rev. 01-2015)

FORM A

Revision Date

Contractor		Phone
Job No.	Project No.	Bid Opening Date

NOTE: This revised Form A represents a change in the bidders original Form A which was submitted electronically at the time of bid. Nevertheless, the bidder is bound by the proposal submitted at the time of bid, under NDDOT provisions, and thus the bidders proposal, the hard copy proposal, addenda, plans, standard specifications, supplemental specifications, and special provisions are part of the bid and contract.

For the life of the project, any changes in work listed here to be self-performed, to be performed by a DBE, or to be completed by a non-DBE subcontractor approved at the time of award must be approved in writing by the Civil Rights Division prior to commencement of any work. No payment will be made without written approval.

PRINT ALL NUMBERS CLEARLY AND LEGIBLY.

LIST ALL DBE FIRMS WHO QUOTED YOUR FIRM ON THIS PROJECT IN SECTION 1, SECTION 2, and/or SECTION 3.

Section 1.

List **DBE** firms to be used on the project.

1. List DBE Firms to be used by the bidder toward the projects goal achievement.
2. List the DBEs to be used by subcontractors toward the project goal.
   - Include the subcontractor's Form A listing the DBEs to be used by the subcontractor.
3. List the spec & code item numbers to be performed by DBEs and the total dollar value of the contract.
   - Note whether the DBE firm is to perform only a portion of a spec & code item (supply, haul, place, etc.) and state the reason(s) the DBE is not being used for the entire item.
   - State the name of the contractor who will perform the remaining portion.
4. DBE bidders: List the work to be performed with “own forces and equipment.”
   - Separately list any work to be subcontracted to DBEs and any materials to be purchased from DBEs.

DBE Firm		
List Specific Spec & Code Item Numbers or Products to be Supplied		Total Contract Dollar Value
Percent DBE will do with own equipment/forces= %		
Percent Non-DBE trucker will perform = %	If Regular Dealer, X 60% =	

DBE Firm		
List Specific Spec & Code Item Numbers or Products to be Supplied		Total Contract Dollar Value
Percent DBE will do with own equipment/forces= %		
Percent Non-DBE trucker will perform = %	If Regular Dealer, X 60% =	

DBE Firm		
List Specific Spec & Code Item Numbers or Products to be Supplied		Total Contract Dollar Value
Percent DBE will do with own equipment/forces= %		
Percent Non-DBE trucker will perform = %	If Regular Dealer, X 60% =	

Continued

FORM A (continued)

DBE Firm		
List Specific Spec & Code Item Numbers or Products to be Supplied		Total Contract Dollar Value
Percent DBE will do with own equipment/forces= %		
Percent Non-DBE trucker will perform = %	If Regular Dealer, X 60% =	

DBE Firm		
List Specific Spec & Code Item Numbers or Products to be Supplied		Total Contract Dollar Value
Percent DBE will do with own equipment/forces= %		
Percent Non-DBE trucker will perform = %	If Regular Dealer, X 60% =	

Section 2:

List DBE firms not used because the bidder will self-perform or procure specific spec/code item numbers.

DBE Firms not used; Bidder Self-Performing	Spec. & code item numbers or products to be supplied by the bidder
1.	
2.	
3.	
4.	

Section 3.

List DBE firms not used due to bid differential and indicate which firm will be performing the work instead.

DBE Firms not used, bid differential	Firms to be used instead of DBE
DBE Firm	
DBE Firm	
DBE Firm	
DBE Firm	
DBE Firm	

See DBE Race/Gender Conscious Special Provision for additional information. Email this form to

Subquotes@nd.gov or Fax to (701)328-0343

BID ITEMS

Projects: SU-3-982(031)035 (PCN-21609), NHU-3-019(044)155 (PCN-17505), and NHU-3-020(074)103 (PCN-17504)

Bidder must type or neatly print unit prices in numerals, make extensions for each item, and total. Do not carry unit prices further than three (3) decimal places.

Item No.	Spec No.	Code No.	Description	Unit	Approx. Quantity	Unit Price $$$$$	Unit Price 000	Amount $$$$$	Amount 00
001	103	0100	CONTRACT BOND	L SUM	1.				
002	107	0100	RAILWAY PROTECTION INSURANCE	L SUM	1.				
003	201	0352	REMOVAL OF TREES & BRUSH	L SUM	1.				
004	201	0370	REMOVAL OF TREES 10IN	EA	12.				
005	201	0380	REMOVAL OF TREES 18IN	EA	2.				
006	202	0108	REMOVAL OF STRUCTURE-SITE 1	L SUM	1.				
007	202	0109	REMOVAL OF STRUCTURE-SITE 2	L SUM	1.				
008	202	0136	REMOVAL OF PAVEMENT	TON	11,203.				
009	202	0151	REMOVE PRECAST CONCRETE BARRIER	LF	50.				
010	202	0174	REMOVAL OF PIPE ALL TYPES AND SIZES	LF	1,289.				
011	202	0210	REMOVAL OF MANHOLES	EA	7.				
012	202	0230	REMOVAL OF INLETS	EA	16.				
013	203	0101	COMMON EXCAVATION-TYPE A	CY	13,480.				
014	203	0102	COMMON EXCAVATION-TYPE B	CY	5,190.				
015	203	0109	TOPSOIL	CY	5,087.				
016	203	0138	COMMON EXCAVATION-SUBCUT	CY	694.				

BID ITEMS

Projects: SU-3-982(031)035 (PCN-21609), NHU-3-019(044)155 (PCN-17505), and NHU-3-020(074)103 (PCN-17504)

Bidder must type or neatly print unit prices in numerals, make extensions for each item, and total. Do not carry unit prices further than three (3) decimal places.

Item No.	Spec No.	Code No.	Description	Unit	Approx. Quantity	Unit Price $$$$$	Unit Price 000	Amount $$$$$	Amount 00
017	203	0140	BORROW-EXCAVATION	CY	3,580.				
018	210	0102	CLASS 1 EXCAVATION-SITE 1	L SUM	1.				
019	210	0103	CLASS 1 EXCAVATION-SITE 2	L SUM	1.				
020	210	0201	FOUNDATION PREPARATION	EA	2.				
021	210	0209	FOUNDATION FILL	TON	20,908.				
022	210	0210	FOUNDATION FILL	CY	84.300				
023	216	0100	WATER	M GAL	2,553.				
024	251	0100	SEEDING CLASS I	ACRE	10.270				
025	251	2000	TEMPORARY COVER CROP	ACRE	6.950				
026	253	0101	STRAW MULCH	ACRE	6.950				
027	253	0201	HYDRAULIC MULCH	ACRE	10.270				
028	255	0101	ECB TYPE 1	SY	4,230.				
029	255	0151	REMOVE ECB TYPE 1	SY	4,230.				
030	258	0100	CONCRETE SLOPE PROTECTION	SY	421.				
031	261	0112	FIBER ROLLS 12IN	LF	6,836.				
032	261	0113	REMOVE FIBER ROLLS 12IN	LF	6,836.				

BID ITEMS

Projects: SU-3-982(031)035 (PCN-21609), NHU-3-019(044)155 (PCN-17505), and NHU-3-020(074)103 (PCN-17504)

Bidder must type or neatly print unit prices in numerals, make extensions for each item, and total. Do not carry unit prices further than three (3) decimal places.

Item No.	Spec No.	Code No.	Description	Unit	Approx. Quantity	Unit Price $$$$$	Unit Price 000	Amount $$$$$	Amount 00
033	302	0120	AGGREGATE BASE COURSE CL 5	TON	7,765.				
034	302	0314	TEMPORARY TRAFFIC SURFACE AGGREGATE	TON	1,328.				
035	302	0356	AGGREGATE SURFACE COURSE CL 13	TON	5,994.				
036	411	0105	MILLING PAVEMENT SURFACE	SY	17,840.				
037	430	0500	COMMERCIAL GRADE HOT MIX ASPHALT	TON	3,033.				
038	550	0302	8.5IN NON-REINF CONCRETE PVMT CL AE-DOWELED	SY	10,378.				
039	602	0130	CLASS AAE-3 CONCRETE	CY	2,313.500				
040	602	1134	PILE SUPPORTED APPROACH SLAB	SY	115.600				
041	602	6001	PRECAST PIER CAP	EA	8.				
042	602	6002	PRECAST ABUTMENT	EA	4.				
043	602	6005	PRECAST CONCRET WING WALL	EA	4.				
044	604	9550	PRESTRESSED CONCRETE FASCIA GIRDER	LF	360.				
045	612	0115	REINFORCING STEEL-GRADE 60	LBS	409,054.				
046	612	0116	REINFORCING STEEL-GRADE 60-EPOXY COATED	LBS	40,782.				
047	616	5890	STRUCTURAL STEEL	L SUM	1.				
048	618	0115	UNTREATED TIMBER	MBM	51.700				

BID ITEMS

Projects: SU-3-982(031)035 (PCN-21609), NHU-3-019(044)155 (PCN-17505), and NHU-3-020(074)103 (PCN-17504)

Bidder must type or neatly print unit prices in numerals, make extensions for each item, and total. Do not carry unit prices further than three (3) decimal places.

Item No.	Spec No.	Code No.	Description	Unit	Approx. Quantity	Unit Price $$$$$	Unit Price 000	Amount $$$$$	Amount 00
049	622	0068	STEEL PILING HP 14 X 89	LF	12,880.				
050	624	0123	PEDESTRIAN RAILING	LF	1,297.400				
051	624	0124	PEDESTRIAN FENCE	LF	351.				
052	702	0100	MOBILIZATION	L SUM	1.				
053	704	0100	FLAGGING	MHR	2,600.				
054	704	1000	TRAFFIC CONTROL SIGNS	UNIT	7,437.				
055	704	1018	LANE CLOSURE-SIGNAL CONTROL/FLAGGING CONTROL	EA	2.				
056	704	1052	TYPE III BARRICADE	EA	43.				
057	704	1060	DELINEATOR DRUMS	EA	124.				
058	704	1067	TUBULAR MARKERS	EA	159.				
059	704	1086	SEQUENCING ARROW PANEL-TYPE B	EA	3.				
060	704	1500	OBLITERATION OF PAVEMENT MARKING	SF	5,484.				
061	704	3501	PORTABLE PRECAST CONCRETE MED BARRIER	LF	40.				
062	704	3510	PRECAST CONCRETE MED BARRIER-STATE FURNISHED	EA	62.				
063	706	0400	FIELD OFFICE	EA	1.				
064	708	1200	SMALL ROCK COVER	TON	620.				

BID ITEMS

Projects: SU-3-982(031)035 (PCN-21609), NHU-3-019(044)155 (PCN-17505), and NHU-3-020(074)103 (PCN-17504)

Bidder must type or neatly print unit prices in numerals, make extensions for each item, and total. Do not carry unit prices further than three (3) decimal places.

Item No.	Spec No.	Code No.	Description	Unit	Approx. Quantity	Unit Price $$$$$	Unit Price 000	Amount $$$$$	Amount 00
065	708	1531	INLET PROTECTION-FIBER ROLL 12IN	EA	7.				
066	708	1533	REMOVAL INLET PROTECTION-FIBER ROLL 12IN	EA	7.				
067	708	1540	INLET PROTECTION-SPECIAL	EA	47.				
068	708	1541	REMOVE INLET PROTECTION-SPECIAL	EA	47.				
069	709	0100	GEOSYNTHETIC MATERIAL TYPE G	SY	13,010.				
070	709	0161	GEOSYNTHETIC MATERIAL TYPE S1	SY	104.				
071	714	4115	PIPE CONDUIT 36IN	LF	64.				
072	714	4120	PIPE CONDUIT 42IN	LF	44.				
073	714	9680	PLUG PIPE-ALL TYPES & SIZES	EA	3.				
074	714	9696	EDGEDRAIN NON PERMEABLE BASE	LF	3,612.				
075	714	9705	UNDERDRAIN CLEANOUT RISER	EA	4.				
076	714	9730	UNDERDRAIN PIPE PVC PERFORATED 6IN	LF	400.				
077	722	0100	MANHOLE 48IN	EA	1.				
078	722	0110	MANHOLE 60IN	EA	5.				
079	722	0120	MANHOLE 72IN	EA	2.				
080	722	0130	MANHOLE 84IN	EA	4.				

BID ITEMS

Projects: SU-3-982(031)035 (PCN-21609), NHU-3-019(044)155 (PCN-17505), and NHU-3-020(074)103 (PCN-17504)

Bidder must type or neatly print unit prices in numerals, make extensions for each item, and total. Do not carry unit prices further than three (3) decimal places.

Item No.	Spec No.	Code No.	Description	Unit	Approx. Quantity	Unit Price $$$$$	Unit Price 000	Amount $$$$$	Amount 00
081	722	0140	MANHOLE 96IN	EA	1.				
082	722	0300	MANHOLE SANITARY	EA	1.				
083	722	1100	MANHOLE RISER 48IN	LF	11.900				
084	722	1110	MANHOLE RISER 60IN	LF	41.900				
085	722	1120	MANHOLE RISER 72IN	LF	12.200				
086	722	1130	MANHOLE RISER 84IN	LF	33.800				
087	722	1140	MANHOLE RISER 96IN	LF	7.100				
088	722	3410	MANHOLE REPAIR	EA	4.				
089	722	3510	INLET-TYPE 2	EA	24.				
090	722	3520	INLET-TYPE 2 DOUBLE	EA	4.				
091	722	3760	INLET SPECIAL-TYPE 1 60IN	EA	1.				
092	722	3910	INLET SLOTTED DRAIN 15IN	LF	10.				
093	722	3920	INLET SLOTTED DRAIN 18IN	LF	180.				
094	722	4020	INLET CATCH BASIN 9IN BEEHIVE	EA	2.				
095	722	6140	ADJUST GATE VALVE BOX	EA	13.				
096	722	6200	ADJUST MANHOLE	EA	20.				

BID ITEMS

Projects: SU-3-982(031)035 (PCN-21609), NHU-3-019(044)155 (PCN-17505), and NHU-3-020(074)103 (PCN-17504)

Bidder must type or neatly print unit prices in numerals, make extensions for each item, and total. Do not carry unit prices further than three (3) decimal places.

Item No.	Spec No.	Code No.	Description	Unit	Approx. Quantity	Unit Price $$$$$	Unit Price 000	Amount $$$$$	Amount 00
097	722	6240	ADJUST UTILITY APPURTENANCE	EA	3.				
098	724	0420	HYDRANT-RELOCATE	EA	1.				
099	724	0611	WATER SERVICE LINE 1IN	LF	45.				
100	724	0892	RELOCATE WATERMAIN	EA	1.				
101	724	2120	36IN X 23IN ARCH SANITARY SEWER PIPE	LF	155.				
102	744	0100	POLYSTYRENE INSULATION BOARD	BD FT	10,422.				
103	748	0140	CURB & GUTTER-TYPE I	LF	3,912.				
104	748	0520	CURB-TYPE I	LF	204.				
105	750	0030	PIGMENTED IMPRINTED CONCRETE	SY	239.				
106	750	0100	SIDEWALK CONCRETE	SY	4,145.				
107	750	1000	DRIVEWAY CONCRETE	SY	88.				
108	750	1020	DRIVEWAY CONCRETE 8IN	SY	269.				
109	750	2115	DETECTABLE WARNING PANELS	SF	288.				
110	752	0600	FENCE CHAIN LINK	LF	2,400.				
111	752	0911	TEMPORARY SAFETY FENCE	LF	70.				
112	752	0922	FENCE REMOVE & RESET	LF	1,750.				

BID ITEMS

Projects: SU-3-982(031)035 (PCN-21609), NHU-3-019(044)155 (PCN-17505), and NHU-3-020(074)103 (PCN-17504)

Bidder must type or neatly print unit prices in numerals, make extensions for each item, and total. Do not carry unit prices further than three (3) decimal places.

Item No.	Spec No.	Code No.	Description	Unit	Approx. Quantity	Unit Price $$$$$	Unit Price 000	Amount $$$$$	Amount 00
113	754	0110	FLAT SHEET FOR SIGNS-TYPE XI REFL SHEETING	SF	68.300				
114	754	0112	FLAT SHEET FOR SIGNS-TYPE IV REFL SHEETING	SF	272.600				
115	754	0206	STEEL GALV POSTS-TELESCOPING PERFORATED TUBE	LF	390.800				
116	754	0592	RESET SIGN PANEL	EA	5.				
117	754	0593	RESET SIGN SUPPORT	EA	3.				
118	762	0103	PVMT MK PAINTED-MESSAGE	SF	161.				
119	762	0122	PREFORMED PATTERNED PVMT MK-MESSAGE(GROOVED)	SF	3,899.				
120	762	0420	SHORT TERM 4IN LINE-TYPE R	LF	30,638.				
121	762	0422	SHORT TERM 6IN LINE-TYPE R	LF	96.				
122	762	0424	SHORT TERM 8IN LINE-TYPE R	LF	546.				
123	762	0430	SHORT TERM 4IN LINE-TYPE NR	LF	9,790.				
124	762	0434	SHORT TERM 8IN LINE-TYPE NR	LF	768.				
125	762	0436	SHORT TERM 24IN LINE-TYPE NR	LF	84.				
126	762	0440	SHORT TERM MESSAGE-TYPE R	SF	68.				
127	762	0442	SHORT TERM MESSAGE-TYPE NR	SF	2,149.				
128	762	1104	PVMT MK PAINTED 4IN LINE	LF	682.				

BID ITEMS

Projects: SU-3-982(031)035 (PCN-21609), NHU-3-019(044)155 (PCN-17505), and NHU-3-020(074)103 (PCN-17504)

Bidder must type or neatly print unit prices in numerals, make extensions for each item, and total. Do not carry unit prices further than three (3) decimal places.

Item No.	Spec No.	Code No.	Description	Unit	Approx. Quantity	Unit Price $$$$$	Unit Price 000	Amount $$$$$	Amount 00
129	762	1108	PVMT MK PAINTED 8IN LINE	LF	286.				
130	762	1305	PREFORMED PATTERNED PVMT MK 4IN LINE-GROOVED	LF	14,569.				
131	762	1307	PREFORMED PATTERNED PVMT MK 6IN LINE-GROOVED	LF	153.				
132	762	1309	PREFORMED PATTERNED PVMT MK 8IN LINE-GROOVED	LF	1,576.				
133	762	1325	PREFORMED PATTERNED PVMT MK 24IN LINE-GROOVED	LF	318.				
134	770	0001	LIGHTING SYSTEM	EA	1.				
135	772	9200	IT SYSTEM	EA	1.				
136	772	9811	TRAFFIC SIGNAL SYSTEM - SITE 1	EA	1.				
137	772	9812	TRAFFIC SIGNAL SYSTEM - SITE 2	EA	1.				
138	930	3040	BEARINGS (EXPANSION)	EA	51.				
139	930	3042	BEARINGS (FIXED)	EA	3.				
140	930	7013	ROADWAY CANOPY-SITE 1	L SUM	1.				
141	930	7014	ROADWAY CANOPY-SITE 2	L SUM	1.				
142	930	8600	ELASTOMERIC BEARING PAD	SF	97.800				
143	930	9537	ABUTMENT UNDERDRAIN SYSTEM	EA	2.				
144	930	9952	PIER MEDALLION	EA	4.				

BID ITEMS

Projects: SU-3-982(031)035 (PCN-21609), NHU-3-019(044)155 (PCN-17505), and NHU-3-020(074)103 (PCN-17504)

Bidder must type or neatly print unit prices in numerals, make extensions for each item, and total. Do not carry unit prices further than three (3) decimal places.

Item No.	Spec No.	Code No.	Description	Unit	Approx. Quantity	Unit Price $$$$$	Unit Price 000	Amount $$$$$	Amount 00
145	**970**	**1000**	**TREES**	**EA**	**14.**				
146	**980**	**0510**	**RAILROAD SUB-BALLAST**	**TON**	**9,353.**				
147	**990**	**0230**	**TEMPORARY ACCESS**	**L SUM**	**1.**				
			SUBTOTAL						
			OPTION 1						
148	**714**	**4097**	**PIPE CONDUIT 15IN-STORM DRAIN**	**LF**	**767.**				
149	**714**	**4101**	**PIPE CONDUIT 18IN-STORM DRAIN**	**LF**	**78.**				
150	**714**	**4107**	**PIPE CONDUIT 24IN-STORM DRAIN**	**LF**	**226.**				
151	**714**	**4117**	**PIPE CONDUIT 36IN-STORM DRAIN**	**LF**	**626.**				
152	**714**	**4121**	**PIPE CONDUIT 42IN-STORM DRAIN**	**LF**	**136.**				
153	**714**	**4131**	**PIPE CONDUIT 54IN-STORM DRAIN**	**LF**	**65.**				
154	**714**	**4216**	**PIPE CONDUIT ARCH 22IN X 13IN**	**LF**	**30.**				
			SUBTOTAL OPTION 1						
			OPTION 2						

BID ITEMS

Projects: SU-3-982(031)035 (PCN-21609), NHU-3-019(044)155 (PCN-17505), and NHU-3-020(074)103 (PCN-17504)

Bidder must type or neatly print unit prices in numerals, make extensions for each item, and total. Do not carry unit prices further than three (3) decimal places.

Item No.	Spec No.	Code No.	Description	Unit	Approx. Quantity	Unit Price $$$$$	Unit Price 000	Amount $$$$$	Amount 00
155	**714**	**0210**	**PIPE CONC REINF 15IN CL III-STORM DRAIN**	**LF**	**767.**				
156	**714**	**0315**	**PIPE CONC REINF 18IN CL III-STORM DRAIN**	**LF**	**78.**				
157	**714**	**0620**	**PIPE CONC REINF 24IN CL III-STORM DRAIN**	**LF**	**226.**				
158	**714**	**0910**	**PIPE CONC REINF 36IN CL III-STORM DRAIN**	**LF**	**626.**				
159	**714**	**1010**	**PIPE CONC REINF 42IN CL III-STORM DRAIN**	**LF**	**136.**				
160	**714**	**1212**	**PIPE CONC REINF 54IN CL III-STORM DRAIN**	**LF**	**65.**				
161	**714**	**2101**	**PIPE CONC REINF ARCH 22IN X 13IN CL III-S DRAIN**	**LF**	**30.**				
			SUBTOTAL OPTION 2						
			OPTION 3						
162	**714**	**4097**	**PIPE CONDUIT 15IN-STORM DRAIN**	**LF**	**145.**				
163	**714**	**4121**	**PIPE CONDUIT 42IN-STORM DRAIN**	**LF**	**31.**				
164	**714**	**4131**	**PIPE CONDUIT 54IN-STORM DRAIN**	**LF**	**412.**				
			SUBTOTAL OPTION 3						
			OPTION 4						

BID ITEMS

Projects: SU-3-982(031)035 (PCN-21609), NHU-3-019(044)155 (PCN-17505), and NHU-3-020(074)103 (PCN-17504)

Bidder must type or neatly print unit prices in numerals, make extensions for each item, and total. Do not carry unit prices further than three (3) decimal places.

Item No.	Spec No.	Code No.	Description	Unit	Approx. Quantity	Unit Price		Amount	
						$$$$$	000	$$$$$	00
165	**714**	**0210**	**PIPE CONC REINF 15IN CL III-STORM DRAIN**	**LF**	**145.**				
166	**714**	**1010**	**PIPE CONC REINF 42IN CL III-STORM DRAIN**	**LF**	**31.**				
167	**714**	**1212**	**PIPE CONC REINF 54IN CL III-STORM DRAIN**	**LF**	**412.**				
			SUBTOTAL OPTION 4						
			SUBTOTAL + ALL OPTIONS						

Projects: SU-3-982(031)035 (PCN-21609), NHU-3-019(044)155 (PCN-17505), and NHU-3-020(074)103 (PCN-17504)

Type of Work: GRADING, SURFACING, STORM DRAIN, BRIDGES, RAILROAD EMBANKMENT, RAILROAD BALLAST, LIGHTING, TRAFFIC SIGNAL, MARKING, CONCRETE SIDEWALK, RETAINING WALL, AND INCIDENTALS

County: RAMSEY

Length: 1.2220 Miles

TIME FOR COMPLETION:

The undersigned Bidder agrees, if awarded the contract, to prosecute the work with sufficient forces and equipment to complete the contract work within the allowable time specified as follows:

WORKING DAY CONTRACT: **NA** working days are provided. The Department will begin charging working days beginning **NA** or the date work begins on the project site, whichever is earlier.

CALENDAR DAY CONTRACT: **NA** calendar days are provided. The completion date will be determined by adding **NA** calendar days to **NA** or the date work begins on the project site, whichever is earlier.

COMPLETION DATE CONTRACT The project completion date is **NA**. The Department provides a minimum of **NA** working days. The Department will begin charging working days beginning **NA** or the date work begins on the project site, whichever is earlier.

REFER TO SP 321(14) FOR 2017 CONSTRUCTION REQUIREMENTS. A SUBSTANTIAL COMPLETION DATE OF OCTOBER 27, 2018 IS FOR OPENING THE ROADWAY FOR THE SAFE AND CONVENIENT USE OF THE TRAVELING PUBLIC, INCLUDING ALL NECESSARY SAFETY FEATURES IN ACCORDANCE WITH SECTION 108.07 B. FINAL COMPLETION FOR ALL WORK SHALL BE JUNE 15, 2019. LIQUIDATED DAMAGES WILL BE CHARGED AS FOLLOWS:

FAILURE TO MEET AUGUST 6, 2017 COMPLETION FOR ITEMS OUTLINED IN SP 321(14) WILL BE CHARGED AT A RATE OF $4,000 PER CALENDAR DAY UNTIL COMPLETED.
FAILURE TO MEET NOVEMBER 17, 2017 COMPLETION FOR ITEMS OUTLINED IN SP 321(14) WILL BE CHARGED AT A RATE OF $4,000 PER CALENDAR DAY UNTIL COMPLETED.
FAILURE TO MEET WINTER SUSPENSION REQUIREMENTS AS OUTLINED IN SP 321(14) WILL BE CHARGED AT A RATE OF $4,000 PER CALENDAR DAY DURING THE TIME PERIOD FROM NOVEMBER 18, 2017 UNTIL APRIL 14, 2018 OR UNTIL WINTER SUSPENSION REQUIREMENTS ARE MET.
FAILURE TO MEET CLOSURE LIMITATIONS AS SET FORTH IN PLAN NOTE 704-P03 WILL BE CHARGED AT A RATE OF $4,000 PER CALENDAR DAY UNTIL REOPENED TO TRAFFIC.
FAILURE TO MEET A SUBSTANTIAL COMPLETION DATE OF OCTOBER 27, 2018 WILL BE CHARGED IN ACCORDANCE WITH SECTION 108.07 B OF THE STANDARD SPECIFICATIONS UNTIL COMPLETED.
FAILURE TO MEET A FINAL COMPLETION DATE OF JUNE 15, 2019 WILL BE CHARGED AT A RATE OF $1,000 PER DAY UNTIL COMPLETED.

LIQUIDATED DAMAGES WILL NOT BE CHARGED CONCURRENTLY.

Projects: SU-3-982(031)035 (PCN-21609), NHU-3-019(044)155 (PCN-17505), and NHU-3-020(074)103 (PCN-17504)

Type of Work: GRADING, SURFACING, STORM DRAIN, BRIDGES, RAILROAD EMBANKMENT, RAILROAD BALLAST, LIGHTING, TRAFFIC SIGNAL, MARKING, CONCRETE SIDEWALK, RETAINING WALL, AND INCIDENTALS

County: RAMSEY

Length: 1.2220 Miles

UTILIZATION OF DISADVANTAGED BUSINESS ENTERPRISE (M/WBE):
The undersigned Bidder certifies that the information given on behalf of the Bidder in Special Provision, "Utilization of Disadvantaged Business Enterprise" (M/WBE), is true and correct and that the bidder has met the assigned goals or has met the good faith effort requirements of the Special Provision.

CONTRACT EXECUTION:
The undersigned Bidder agrees, if awarded the contract, to execute the contract form and furnish a contract bond within fifteen calendar days, as determined by NDCC Section 1-02-15, after date of notice of award, in accordance with the provisions of Sections 103.05 and 103.06 of the Standard Specifications.

AFFIDAVIT:

STATE OF _____)
) ss.
COUNTY OF _____)

The undersigned bidder, being duly sworn, does depose and say that they are an authorized representative of _____
CONTRACTOR NAME
of _____ , a
MAILING ADDRESS

☐ Individual ☐ Partnership ☐ Joint Venture ☐ Corporation

and that they have read, understand, acknowledge, and accept the entire proposal form; and that all statements made by said bidder are true and correct.

_____ , TITLE _____
BIDDER MUST SIGN ON THIS LINE

_____
TYPE OR PRINT SIGNATURE ON THIS LINE

Subscribed and sworn to before me this day.

_____
COUNTY

(Seal)

_____ _____
STATE DATE

_____
NOTARY PUBLIC

My commission expires _____

NORTH DAKOTA DEPARTMENT OF TRANSPORTATION

Job #7, Project No. SU-3-982(031)035, NHU-3-019(044)155, & NHU-3-020(074)103

Grading, Surfacing, Storm Drain, Bridges, Railroad Embankment, Railroad Ballast, Lighting, Traffic Signal, Marking, Concrete Sidewalk, Retaining Wall, & Incidentals

INDEX OF PROVISIONS

Road Restriction Permits

Hot Line Notice

NDDOT Supplemental Specifications dated October 1, 2016

Price Schedule for Miscellaneous Items dated October 1, 2014 (PS-1)

SP DBE Program - Race Conscious dated February 8, 2016

E.E.O. Affirmative Action Requirements dated March 15, 2014

Appendix A of the Title VI Assurances dated October 1, 2014

Appendix E of the Title VI Assurances dated October 1, 2014

SP Cargo Preference Act

Required Contract Provisions Federal Aid Construction Contracts
(Form FHWA 1273 Rev. May 1, 2012)

SP Certified Payrolls, revised 10-24-2015

Labor Rates from U.S. Department of Labor dated January 8, 2016

On-The-Job Training Program dated October 1, 2015

SP 3(14) Temporary Erosion & Sediment Best Management Practices

SP 4(14) Federal Migratory Bird Treaty Act

SP 281(14) Buy America

SP 282(14) Certificate of Compliance

SP 319(14) Railroad Requirements, for NHU-3-019(044)155 & NHU-3-020(074)103

INDEX OF PROVISIONS

SP 320(14) Interconnect Cable (Composite), for NHU-3-020(074)103

SP 321(14) Winter Suspension

SP 328(14) Painting Over Galvanized Steel, for NHU-3-019(044)155 & NHU-3-020(074)103

SP 329(14) Untreated Timber, for NHU-3-020(074)103

SP 339(14) Waterproofing, for NHU-3-020(074)103

SP 373(14) Work Zone Camera System, for NHU-3-019(044)155 & NHU-3-020(074)103

SP Fuel Cost Adjustment Clause dated September 8, 2006

NOTICE

TO: All prospective bidders on all North Dakota Department of Transportation Highway Construction Projects.

Contractors moving construction equipment to NDDOT highway construction projects are subject to the Road Restriction Policy with the following modifications:

A. The contractor may purchase up to 10 single trip permits for each NDDOT highway construction project at a cost ranging from $20 to $70 each. These permits must be purchased from the Motor Carrier Division of the Highway Patrol at the central office of the NDDOT in Bismarck, North Dakota.

B. The $1 per mile fee will not be charged for Gross Vehicle Weights (GVW) exceeding 105,500 pounds, 105,500 pounds, and 105,000 pounds for highways Restricted by Legal Weights, 8 Ton, and 7 Ton highways respectively.

C. The $5 per ton per mile fee will be charged only for loads exceeding a GVW of 130,000 pounds, 120,000 pounds, 110,000 pounds and 80,000 pounds for highways Restricted by Legal Weights, 8 Ton, 7 Ton, and 6 Ton highways respectively.

D. The maximum weights per axle for each of the class restrictions still apply. If it is shown that more axles cannot be added, movement may be authorized; however, a $1 per ton per mile fee will be charged for all weight in excess of the restricted axle limits.

E. These construction equipment single trip permits apply to State and US Highways only.

F. The District Engineers and Highway Patrol will select the route of travel.

G. Contractors moving equipment to other than NDDOT highway construction projects are subject to all fees as shown in the Road Restriction Permit Policy.

H. Contractors must call the Highway Patrol prior to movement of all overweight loads on all State and US Highways.

NDDOT ROAD AND VEHICLE RESTRICTIONS Date Revised 05-22-10

ROAD RESTRICTION PERMITS

Permits shall be issued for the movement of non-divisible vehicles and loads on state highways which exceed the weight limits during spring road restrictions. The issuance of permits may be stopped or posted weights changed at any time based on the varying conditions of the roadways. Permits can be obtained from the Highway Patrol.

RESTRUCTION CLASSIFICATIONS WITH ALLOWABLE AXLE WEIGHTS AND GROSS VEHICLE WEIGHTS	PERMIT AND TON/MILE FEES
Highways Restricted by Legal Weight Single Axle -- 20,000 lbs. Tandem Axle -- 34,000 lbs. Triple Axle -- 48,000 lbs. 4 Axles or more -- 15,000 lbs. per axle Gross Vehicle Weight -- 105,500 lbs. Note: The above weights apply to state highways restricted by legal weights, other than interstate highways, in areas where road restrictions are in force. When the gross weight of an axle grouping exceeds 48,000 pounds, the $1 per ton per mile shall apply to all weight in excess of 15,000 pounds per axle.	Permit Fee: $20-$70 per trip Ton Mile Fee: 105,501 lbs. to 130,000 lbs. GVW -- $1 per mile Over 130,000 lbs. GVW – $1 per mile **plus** $5 per ton per mile for that weight exceeding 130,000 lbs. GVW Exceeding axle limits -- $1 per ton per mile
8-Ton: Single Axle -- 16,000 lbs. Tandem Axle -- 32,000 lbs. 3 Axles or more -- 14,000 lbs. per axle Gross Vehicle Weight -- 105,500 lbs.	Permit Fee: $20-$70 per trip Ton Mile Fee: 105,501 lbs. to 120,000 lbs. GVW -- $1 per mile Over 120,000 lbs. GVW – $1 per mile **plus** $5 per ton per mile for that weight exceeding 120,000 lbs. GVW Exceeding restricted axle limits -- $1 per ton per mile
7-Ton: Single Axle -- 14,000 lbs. Tandem Axle -- 28,000 lbs. 3 Axles or more -- 12,000 lbs. per axle Gross Vehicle Weight -- 105,500 lbs.	Permit Fee: $20-$70 per trip Ton Mile Fee: 105,500 lbs. to 110,000 lbs. GVW -- $1 per mile Over 110,000 lbs. GVW – $1 per mile **plus** $5 per ton per mile for that weight exceedi ng 110,000 lbs. GVW Exceeding restricted axle limits -- $1 per ton per mile
6-Ton: Single Axle -- 12,000 lbs. Tandem Axle -- 24,000 lbs. 3 Axles or more -- 10,000 lbs. per axle Gross Vehicle Weight -- 80,000 lbs.	Permit Fee: $20-$70 per trip Ton Mile Fee: $5 per ton per mile for all weight exceeding 80,000 lbs. GVW Exceeding restricted axle limits -- $1 per ton per mile
5-Ton: Single Axle -- 10,000 lbs. Tandem Axle -- 20,000 lbs. 3 Axles or more -- 10,000 lbs. per axle Gross Vehicle Weight -- 80,000 lbs.	No overweight movement allowed

SINGLE UNIT FIXED LOAD VEHICLES SUCH AS TRUCK CRANES AND WORKOVER RIGS

A. Permit Fee and Ton Mile Fee for Self-Propelled Fixed Load Vehicles.

1. Permit Fee: $25 per trip

2. $1 per ton per mile for all weight in excess of restricted axle limits or in excess of legal limits on state highways in areas where road restrictions are in force. When the gross weight of an axle grouping exceeds 48,000 pounds, the $1 per ton per mile shall apply to all weight in excess of 15,000 pounds per axle (see weight classification chart in section C.)

3. $5 **per ton per mile** for all movements exceeding the following gross vehicle weight limits:

   a. 105,500 lbs. GVW on unrestricted state highways, other than interstate highways, in areas where road restrictions are in force.
   b. 105,500 lbs. GVW on 8-ton highways.
   c. 105,500 lbs. GVW on 7-ton highways.
   d. 80,000 lbs. GVW on 6-ton highways.
   e. No overweight movement allowed on 5-ton highways

B. Permit Fees for Work-Over Rigs and Special Mobile Equipment Exceeding 650 but not 670 Pounds Per Inch Width of Tire.

1. Permit Fee:
   a. $50 per trip on work-over rigs up to 650 pounds per inch width.
   b. $75 per trip on work-over rigs that exceed 650 but not 670 pounds per inch width of tire.
2. The work-over rig shall be stripped to the most minimum weights.
3. A minimal number of state highway miles shall be used.
4. District engineer approval shall be obtained prior to movement when vehicle exceeds restricted axle weights by more than 5,000 pounds.
5. A validation number ending in TM must be obtained from the Highway Patrol prior to using a self-issue single trip movement approval form.
6. The ton mile shall be waived.

NOTICE

U.S. DEPARTMENT OF TRANSPORTATION

"HOT LINE"

As part of its continuing investigation into Highway Construction Contract Bid Rigging and abuses in the Disadvantaged Business Enterprise Program, the Inspector General for the Department of Transportation (DOT) has established a "HOT LINE" to receive information from contractors, suppliers, or anyone with knowledge of such activities.

The toll-free "HOT LINE' telephone number is 1-800-424-9071 and will be manned during normal working hours (8 a.m. to 5 p.m. EST). This operation is under the direction of DOT's Inspector General. All information will be treated confidentially and anonymity will be respected.

CALL
Inspector General's 'HOT LINE'
Toll Free 1-800-424-9071
Washington, DC Area:
202-366-1461
Fax: 202-366-7749

WRITE
Inspector General
Post Office Box 23178
Washington, DC 20026-0178

Email: hotline@oig.dot.gov

The field office address and telephone number for NORTH DAKOTA is:

CHICAGO REGIONAL OFFICE

Special Agent-in-Charge
Commercial: 312-353-0106
111 N. Canal St., Suite 677
Chicago, Illinois 60606

CERTIFICATION

I hereby certify the attached supplemental specifications effective on October 1, 2016.

/S/ 5/10/16

Bob Fode, P.E., Director
Office of Project Development

Date

North Dakota
Department of Transportation

NORTH DAKOTA DEPARTMENT OF TRANSPORTATION
SUPPLEMENTAL SPECIFICATION
REVISIONS

Effective Date: 10/01/2016

The following specifications are supplementary to the 2014 Edition of the *Standard Specifications for Road and Bridge Construction* as they apply to this Contract. Page references in this document apply to the hard bound, printed edition of the specifications (the "blue book") and the "as printed" version of the specifications on the Department's website.

101.03 ABBREVIATIONS **PAGE 8** **10/01/15**

Delete the line for "ACPA American Concrete Precast Association" and replace it with the following:

ACPA American Concrete Pipe Association

Add the following item to Section 101.03:

NPCA National Precast Concrete Association
SWPPP Storm Water Pollution Prevention Plan

101.04 DEFINITIONS **PAGE 10** **10/01/15**

Delete the definition for "Sieve" and replace it with the following:

Sieve. U.S.A. Standard Sieve, as defined in ASTM E 11. The specified percent passing for each sieve is measured by weight.

102.07 B Electronic Proposal **Page 23** **10/1/16**

Replace 102.07 B with the following:

B. Electronic Proposal.

1. **Electronic Bidding Credentials.**
   A Digital ID is required to electronically sign proposals.

   If a Bidder does not have a Digital ID, create a Digital ID and set up bidding privileges by following the instructions on the Bid Express website (www.bidx.com). Begin the Digital ID creation process a minimum of 7 business days before the bid opening.

2. **Submitting an Electronic Proposal.**
   Prepare the proposal using Bid Express as follows:
   1. Download the most current "Proposal Files" and "DBE Roster File" from the Bid Express website (www.bidx.com).
   2. Use the Bid Component for AASHTOWare Project Bids to prepare and submit the proposal forms. Follow the Bid Component software instructions and review the help

screens provided on the Bid Express website to ensure that the bid item list is prepared properly. Provide a unit price for each bid item.

If the proposal forms contain alternate or optional bid items, provide unit prices for those bid items as follows:

a. For alternate bid items, provide a unit price for each bid item included in the Bidder's preferred alternate.
b. For optional bid items, provide a unit price for all bid items under all options.

The user's Digital ID must be on file and enabled by Bid Express. The use of the Digital ID constitutes the Bidder's signature for execution of the proposal. The Department is not responsible for the Bidder's inability to submit a proposal using AASHTOWare.

103.08 A General **PAGE 30** **10/1/16**

Replace the second paragraph with the following:

For subcontracts at any tier equal to or greater than $750,000, obtain from the subcontractor all bid documentation used to prepare the subcontractor's bid for the portion of the work reflected in the subcontract. The subcontractor's bid documentation requirements shall be the same as for the Contractor, except it shall be submitted within 5 days of approval of the Prime Contractor's Request to Sublet. Submit to the Department the bid documentation and affidavit in a separate sealed container, including the subcontractor's name and address on the container.

104.02 C Significant Changes to the Character of Work **PAGE 34** **10/01/15**

Delete the following paragraph in its entirety:

If the Contractor believes an alteration in the work is a significant change that necessitates a contract revision, the Contractor shall notify the Engineer in accordance with Section 104.03, "Contractor Requested Contract Revisions".

104.05 A Submission of the Claim **PAGE 37** **10/01/15**

Replace the fourth paragraph of Section 104.05 with the following:

Provide a claim submittal to the Engineer that contains, at a minimum, the following information for each claim issue included on the *Notice of Intention to File a Claim* (SFN 16743). Failure to supply the following information for each claim issue constitutes a waiver of claim for addional compensation for each submitted claim item.

104.07 C. Conditions **PAGE 42** **10/01/16**

Replace number 5 with the following:

5. Contains revisions to the contract that the Department has previously accepted on another Department project, or is based on or similar to standard specifications, special provisions, or another set of plans.

Delete Section 105.03 COOPERATION WITH UTILITY OWNERS and replace with the following:

105.03 COOPERATION WITH UTILITY OWNERS

A. General.

Utility facilities shown on the plans, if any, are for reference purposes only and may not constitute an exhaustive representation of all utility facilities within the project. Notify the North Dakota One Call System (811) before starting the work, so they may locate and mark all utility facilities within the project.

Comply with Chapter 49-23 of the NDCC in determining the location of underground utilities.

Locate Department-owned, publicly-owned, and privately-owned utility facilities, whether on or off the One Call System.

If the Contractor's operations have the potential to damage utility facilities identified in the contract to remain in place during the work, including operations adjacent to these utility facilities, the Contractor shall account for and protect the utility facilities. Before starting the work, coordinate the protections with the utility owner.

B. Utilities Identified in Plans.

Notify all utility owners of the anticipated project schedule within two weeks of receiving notice to proceed. Coordinate adjustments and relocations with affected utility owners. The Contractor, the Engineer, and the utility owners shall agree to a schedule of the work and the adjustments and relocations before beginning the work.

Cooperate with utility owners in relocating and adjusting utility facilities to minimize interruption to service and duplication of work by utility owners.

The Department will provide utility conflict plans, if available. Utility conflict plans are not part of the contract and are for information purposes only.

C. Utilities Encountered During Work.

If the Engineer determines that adjustment or relocation of utility facilities is necessary to accommodate construction, the Engineer will arrange and coordinate the work with the owner if the contract does not otherwise provide for such work. This does not relieve the Contractor of any liability that may arise under the provisions of the NDCC.

D. Scheduling.

1. General.

In order to minimize interference with traffic operations, the Contractor, Engineer, and utility owner shall agree to a detailed schedule before starting work.

2. Utility Coordination Meeting.

If the contract requires a utility coordination meeting, arrange the meeting with the utility owners and the Engineer to occur no later than two weeks after the notice to proceed. At the meeting, provide an agenda and a tentative construction schedule for planning utility relocations and adjustments; after the meeting, publish minutes and distribute a copy to all meeting attendees.

E. Fire Hydrants.

Before starting work that affects a fire hydrant, coordinate with the local fire authority to determine if provisions need to be in place before starting the work. If provisions are necessary, obtain the approval of the local fire authority before beginning the work affecting the fire hydrant.

F. Damage and Interruptions.

If the Contractor causes damage to utility facilities, the Contractor is responsible for the costs of restoring or repairing the damaged utility facility to a condition equal to or better than the condition existing before the damage occurred. Immediately notify the utility owner of the damage or, if the owner is unknown, the One Call System. Do not conceal, attempt to conceal, or make repairs to the utility facilities until approved by the utility owner. If this damage causes interruption to utility service, continuously coordinate with the utility owner until the service is fully restored.

The Department will not pay the Contractor for the cost to restore or repair damage utility facilities and will consider any delays resulting from this damage to be non-excusable in accordance with Section 108.06, Determination of and Extensions to the Contract Time."

105.08 A.3 Additional Section 600 Work Drawing Submittal Requirements. PAGE 50 10/01/16

Replace the first paragraph with the following:

Provide work drawings on 11 inch × 17 inch sheets generated by a CADD system.

Use the minimum text sizes shown in Table 105-01.

Table 105-01	
Dimensions and Notes	0.08 Inches
Detail Subtitles	0.09 Inches
Detail Titles	0.10 Inches

106.01 C Certificate of Compliance PAGE 55 10/01/16

Replace 106.01 C, "Certificate of Compliance with the following:

C. Certificate of Compliance (CoC).

SP 282(14) Certificate of Compliance (CoC) has replaced this section.

106.02 D Aggregate Source Limitations PAGE 58 10/01/15

Delete number 8 and replace it with the following:

8. In Stark County, within the 2-mile radius from the center of Section 30-137-92;

Delete number 11 and replace it with the following:

11. In Hettinger County, within the 1-mile radius from the center of Section 28-135-91;

107.17 REMOVED MATERIAL **PAGE 80** **10/01/15**

Replace Section 107.17 with the following:

107.17 REMOVED MATERIAL
Unless otherwise designated in the contract, removed material becomes the property of the Contractor.

If the Contractor determines that the material will be disposed of, the material must be disposed in one of the following ways:

A. Dispose of the material through a beneficial use. Apply for a beneficial use permit from the NDDoH by completing an *NDDOT Projects-Inert Waste Beneficial Use Application* (SFN 58981). Provide the Engineer with copies of all documents submitted to the NDDoH.

B. Dispose of the material at an approved permanent waste management facility.

C. If waste cannot be reasonably managed at a permanent waste management facility, obtain approval from the NDDoH for a variance to dispose of the inert waste at another site. Apply for a variance by completing an *NDDOT Projects-Inert Waste Disposal Variance Application* (SFN 54344). Provide the Engineer with copies of all documents submitted to the NDDoH.

   Obtain locations of permanent waste facilities, applications, and guidelines from the NDDoH, Division of Waste Management. View a list of municipal and inert waste landfills and review guidance on the NDDoH website: http://www.ndhealth.gov.

Include the cost of material disposal in the contract unit price of the relevant contract item.

108.02 PRECONSTRUCTION CONFERENCE **PAGE 81** **10/01/16**

Delete Section 108.02 and replace with the following:

108.02 CONSTRUCTION MEETINGS

A. Preconstruction Conference.
Before beginning the work, including pit operations specific to the project, and unless waived by the Engineer, coordinate and hold a preconstruction conference with the Engineer at a mutually agreed time and place. Notify subcontractors, utility companies, and other interested parties of the time and place of the preconstruction conference.

Submit the following to the Engineer before or at the preconstruction conference:

1. A company safety plan and the name of the safety officer;

2. An EEO / affirmative action plan and the name of the EEO officer;

3. A list of key project personnel and their phone numbers;

4. The initial or baseline schedule in accordance with Section 108.03, "Progress Schedule";

5. A list of proposed subcontractors requested in accordance with Section 108.01, “Subletting of Contract”;

6. A list of material suppliers;

7. A list of pits to be used (owner and legal description);

8. All COAs in accordance with Section 107.05, “Material Source Approval”;

9. The applicable storm water permits and the SWPPP in accordance with Section 107.02.C, “Storm Water Permits”;

10. The names of Quality Control Personnel and a Quality Control Plan in accordance with Section 430.04 A, “Contractor Quality Control (QC).”

B. Weekly Planning and Reporting Meeting.
The weekly planning and reporting meeting is required when specified in the plans.

Organize a weekly meeting to coordinate efforts between subcontractors, utilities, local authorities, and others. The Engineer will develop a list of parties to be invited to the meeting and will provide the list to the Contractor at the Preconstruction Meeting. The Engineer may provide an updated list with additional attendees at any time.

Send a knowledgeable representative to conduct the meeting. Prepare minutes for each meeting and make the appropriate distribution of the minutes. Distribute the minutes within 48 hours of the meeting conclusion. Allow the Engineer to review and approve the minutes before distribution.

Include in the meeting agenda a discussion of problems encountered since the last meeting, and information of interest to those invited to the meeting. Provide a written schedule of the next week’s work and a tentative schedule for the following week.

108.03 D Measurement and Payment **PAGE 91** **10/01/15**

Replace Table 108-01 with the following:

Table 108-01
CPM Schedule Price Reductions

Days Late Submitting Update Schedule	Percentage Price Reduction to the Prorated Amount[1]
1	20
2	40
3	60
4	80
5	100

[1] The “prorated amount” is equivalent to the amount calculated for each update schedule submission in Section 108.03 D, Item 2.

108.06 B.1 General **PAGE 93** **10/01/15**

Replace the 6th paragraph of Section 108.06 B.1 with the following:

The Contractor’s plea that the contract time was insufficient is not a valid reason for an extension of time. For calendar day and completion date contracts, the Department will not extend the contract time for delays encountered on holidays and during the period from November 15 to April 15. When the time as extended by the Department falls on a date that is a holiday, the Engineer will extend the contract time to the next business day.

108.06 B.4 Excusable, Non-compensable Delays **PAGE 96** **10/01/16**

Replace letter “f.” with the following:

f. Delays due to utility or railroad work when the Contractor has complied with the requirements of Section 105.03.D, “Scheduling,” but the utility or railroad company failed to perform their work within the time agreed to in the utility coordination meeting**.**

109.01 J.2 Scale Applications **PAGE 103** **10/01/16**

Replace the paragraph with the following:

Use either computerized or non-computerized scales to determine weights for material when the quantity of the material included in the bid item list is 2,000 tons or less.

109.01 J.2.a Computerized Scales **PAGE 103** **10/01/16**

Replace the first paragraph with the following:

Use a computerized scale to determine the weight of material when the quantity included on the bid item list is greater than 2,000 tons.

109.01 J.2.b Computerized Loader Bucket Scales **PAGE 103** **10/01/15**

Delete the first paragraph and replace with the following:

Loader bucket scales may be used to weigh materials when the quantity of material included in the bid item list is less than 10,000 tons and for aggregates specified under Sections 420 “Bituminous Seal Coat”, 421 “Microsurfacing”, and 422 “Slurry Seal” regardless of quantity.

109.01 J.4.b(2) Hopper or Batch Scales **PAGE 105** **10/01/15**

Replace Section 109.01 J.4.b(2) with the following:

After the material has been weighed on the project scale and placed in a truck, weigh the loaded truck on a certified scale owned and operated by an entity other than the Contractor. Provide the tare weight of the truck along with the comparison weigh ticket.

109.01 J.6.a General **PAGE 106** **10/01/15**

Delete the second paragraph and replace with the following:

Document the weight of each load on a separate, sequentially numbered weigh ticket that has a maximum size of 5.5 × 8.5 inches. Provide one copy to the driver of the truck. The truck driver shall deliver the weigh ticket to the Engineer at the location where the material is incorporated into the work. The Engineer will reject loads that are not accompanied by a legible weigh ticket.

155.03 A.3 Water Measuring **PAGE 143** **10/01/15**

Replace the second paragraph in Section 155.03 A.3 with the following:

Use a water measuring system that:

- Delivers the designated quantity of water for each batch within the tolerance specified in Section 802.03 B.4, "Batching Water";
- Automatically stops the water flow when the designated quantity has been delivered; and
- Is adjustable and has a calibrated indicator showing the quantity of water measured for each batch.

155.07 D Bridge Deck Overlay Finishing Machines **PAGE 147** **10/01/15**

Replace Section 155.07 D with the following:

D. Bridge Deck Overlays Finishing Equipment.

Use a finishing machine that is:

- Equipped with an oscillating screed or screeds with an effective weight of at least 75 pounds for each square foot of bottom face area, and provided with positive control of vertical position, the angle of tilt, and the shape of the crown. At least one oscillating screed shall be capable of consolidating the concrete to the specified density;
- Long enough to uniformly strike off and consolidate the width of lane to be paved
- Capable of forward and reverse motion under positive control;
- Travelling on rails with fully-adjustable and stable supports;
- Supported without the use of shims; and
- Not anchored to the concrete using powder actuated fasteners, unless that concrete will be subsequently overlaid.

202.04 A General **PAGE 161** **10/01/16**

Replace the second paragraph with the following:

Remove existing bituminous and concrete surfaces to a joint or create a smooth, vertical plane along the entire length of the remaining surface.

202.04 B Removal of Bridges and Box Culverts **PAGE 161** **10/01/16**

Replace Section 202.04 B with the following:

B. Removal of Structures and Box Culverts.

When the removal is of a bridge, perform asbestos inspection and testing and submit SFN 17987 "Asbestos Notification of Demolition and Renovation" to NDDoH at least 10 working days before conducting any demolition. If asbestos is discovered, the Engineer will issue a contract revision for work related to the asbestos.

Remove existing substructures to one foot below the existing stream bottom, and remove those parts outside the stream to one foot below final ground surface.

If bridge elements are designated for salvage, match mark the elements and transport them to the location specified in the contract.

202.06 BASIS OF PAYMENT **PAGE 162** **10/01/16**

Delete the “Saw Concrete, Linear Foot” and “Saw Bituminous Surfacing-Full Depth, Linear Foot” from the “Pay Item List”.

203.02 EQUIPMENT **PAGE 163** **10/01/15**

Replace the equipment list in Section 203.02 with the following:

Equipment	Section
Vibratory Sheepsfoot/Pad Foot/Extended Pad Foot Rollers	151.01 E

203.04 B Topsoil **PAGE 164** **10/01/16**

Replace the second paragraph of Section 203.04 B with the following:

Construct topsoil stockpiles with minimum slopes of 10:1 or flatter slopes, if located within the clear zone. Place topsoil piles at acceptable locations outside of the grading limits or, if necessary, outside the right of way at no additional cost to the Department. If stockpiling topsoil outside the right of way, submit a copy of the agreement negotiated with the landowner 10 days before constructing topsoil stockpiles.

203.04 B.1 Topsoil - Wetland **PAGE 165** **10/01/15**

Replace the second paragraph of Section 203.04 B.1 with the following:

Spread a minimum of 6 inches of wetland topsoil at mitigation sites and temporary wetland impact areas.

203.04 C Subcut **PAGE 165** **10/01/15**

Add the following paragraph to the end of Section 203.04 C:

Dispose of material removed from the subcut area as specified in Section 107.17, “Removed Material”.

203.05 B Borrow Excavation **PAGE 169** **10/01/16**

Replace the third paragraph of Section 203.05 with the following:

If the borrow source is a Department option, the Engineer will measure the topsoil stripped from the borrow area. Provide a minimum of two working days’ notice to allow the Engineer to complete the preliminary cross sectioning before removing topsoil. Remove and stockpile topsoil, as specified in Section 203.04 B, “Topsoil”, before excavation. Provide notice and allow one working day for the Engineer to complete the topsoil measurement before beginning borrow excavation.

203.06 BASIS OF PAYMENT **PAGE 171** **10/01/16**

Delete “Topsoil Borrow Area, Cubic Yard” from the Pay Item list and replace with “Topsoil – Dept Option Borrow Area, Cubic Yard”.

203.06 C Department Optioned Borrow **PAGE 171** **10/01/16**

Add the following to the end of Section 203.06 C:

Include the removal and replacement of topsoil in Department optioned borrow areas in the contract unit price for “Topsoil – Dept Option Borrow Area”.

216.06 Basis of Payment **PAGE 175** **10/01/15**

Replace Section 216.06 with the following:

Pay Item	Pay Unit
Water	M Gal

An “M Gal” is equivalent to 1,000 gallons.

Such payment is full compensation for furnishing all materials, equipment, labor, and incidentals to complete the work as specified.

230.05 B Reshaping Inslopes **PAGE 179** **10/01/16**

Replace Section 230.05 Reshaping Inslopes with the following:

B. Reshaping Foreslopes.
The Engineer will measure each foreslope on each side of the roadway separately.

251.03 D Seed Class **PAGE 182** **10/01/15**

Add the following footnote to Table 251-01:

[1] Substitute Thickspike or Stream bank Wheatgrass of the Critana, Banstock, Sodar, AC Polar or Elbee variety if Sideoats Grama is unavailable.

253.02 A Hydraulic Mulch **PAGE 188** **10/01/16**

Replace the first paragraph with the following:

When applying hydraulic mulch and seed together, use hydraulic spraying equipment that mixes the seed and mulch in water.

253.03 B Hydraulic Mulch **PAGE 188** **10/01/16**

Delete the third paragraph.

253.03 C Straw Mulch **PAGE 188** **10/01/15**

Delete the following sentence from this section:

At least 50 percent of the mulch by weight must be at least 8 inches in length.

262.04 A Installation **PAGE 201** **10/01/15**

Replace the first paragraph of Section 262.04 A with the following:

Attach anchor lines to the flotation device.

265.06 Basis of Payment **PAGE 204** **10/01/15**

Replace the first paragraph after the list of pay items with the following:

Include the cost for pipe, geosynthetic material, topsoil, and seed in the price bid for "Stabilized Construction Access".

302.03 MATERIALS **PAGE 209** **10/01/15**

Replace table in Section 302.03 with the following:

Material	Section
Aggregates	816
Salvaged Base Course	817
Traffic Service Aggregate	816 Class 5; or 817

302.04 A.2 Gradation **PAGE 209** **10/01/15**

Replace the first paragraph in Section 302.04 A.2 with the following:

The Engineer will collect three samples for each 1,000 tons of material placed, except when more than 1,000 tons are placed in a day. If more than 1,000 tons are placed in a day, the Engineer will collect three samples for that day's placement. If the aggregate fails to meet the specified gradation, the Engineer will apply a price reduction as specified in Section 302.06 B, "Contract Price Adjustments".

302.04 C Surface Tolerance **PAGE 210** **10/01/15**

Replace Section 302.04 C with the following:

C. Surface Tolerance.
Unless one of the following surface tolerances is specified, construct the surface to within 0.08 feet of the proposed elevation.

1. Surface Tolerance Type B.
Use trimming equipment, including motor graders, equipped with automatic grade control to adjust for the cross slope and longitudinal profile. Construct the finished surface to within 0.04 feet of the proposed elevation.

Reincorporate material removed from high points during trimming into other portions of the base.

2. **Surface Tolerance Type C.**
   Use roadbed planers to construct the finished surface. The Engineer will allow the base or surface course to be used as the grade reference when trimming shoulders. Construct the finished surface to within 0.04 feet of the proposed elevation.

   Reincorporate material removed from high points during trimming into other portions of the base.

306.04 A.1 Gradation **PAGE 213** **10/01/15**

Replace the first paragraph in Section 306.04 A.1 with the following:

The Engineer will collect three samples for each 1,000 tons of material placed, except when more than 1,000 tons are placed in a day. If more than 1,000 tons are placed in a day, the Engineer will collect three samples for that day's placement. If the aggregate fails to meet the specified gradation, the Engineer will apply a price reduction as specified in Section 306.06 B, "Contract Price Adjustments".

401.03 MATERIAL **PAGE 221** **10/01/16**

Replace the last paragraph in Section 401.03 with the following:

Obtain samples of the bitumen under the observation of the Engineer. The Engineer will take immediate possession of the samples.

401.03 B Tack Coat and Fog Seal. **PAGE 221** **10/01/15**

Delete Section 401.03 B and add the following:

B. Tack Coat.
Use a material from Table 401-01.

Table 401-01

Material	Section
SS-1h	818.02 F
MS-1	818.02 F
CSS-1h	818.02 E.1

When MS-1 is used it may be diluted by the supplier or the Contractor.

C. Fog Seal.
Use a material from Table 401-02.

Table 401-02

Material	Section
SS-1h	818.02 F
CSS-1h	818.02 E.1

401.04 A Application of Bitumen **PAGE 221** **10/01/15**

Delete Section 401.04 A and add the following:

A. Application of Bitumen.

1. General.
Prepare the surface by removing loose dirt and deleterious material.

Provide the Engineer with the manufacturer recommended application temperature ranges. During application, maintain the temperature of bitumen within the ranges recommended by the manufacturer.

Apply bitumen with a distributor on a compacted and stable surface. Use hand sprayers to cover irregular areas. Completely cover the area receiving the bitumen application.

If applying bitumen in multiple passes, overlap the bitumen along adjoining edges of the passes.

Protect the surfaces of structures and other roadway appurtenances against tracking and splattering.

2. Prime Coat.
Apply prime coat when the ambient air temperature is at least 40°F.

Allow the prime coat to cure a minimum of 48 hours before placing pavement.

3. Tack Coat.
Apply tack coat when the air temperature and existing mat temperature are at least 35°F.

Apply tack coat to a dry surface.

Allow tack coat to cure before applying surfacing material.

4. Fog Coat.
Apply fog coat when the ambient air temperature is at least 40°F.

Apply fog coat to a dry surface.

420.04 A General **PAGE 224** **10/01/15**

Replace Section 420.04 A with the following:

A. General.
Do not start seal work after September 1.

Allow material to cure as shown in Table 420-01 before applying seal coat materials.

Table 420-01
Curing Period

Material Type	Curing Period
Prime Coat	4 days
Asphalt Cement Pavements	7 days
Emulsion Pavements	15 days

Schedule the work so that the last bitumen application of the day is sufficiently cured to allow installation of the short-term pavement marking before sunset.

420.04 D Cover Coat Material Application **PAGE 225** **10/01/15**

Replace the third paragraph with the following:

Within one minute following the application of the bitumen, spread the cover coat material uniformly over the bituminous material with an aggregate spreader. Apply cover material by hand to areas that are inaccessible to the aggregate spreader.

420.04 D Cover Coat Material Application **PAGE 225** **10/01/15**

Delete the eighth paragraph in its entirety.

420.04 H.1 Bitumen **PAGE 226** **10/01/16**

Replace Section 420.04 H.1 with the following:

1. **Bitumen.**
   Obtain samples of this material under the observation of the Engineer. The Engineer will take immediate possession of the samples.

421.03 MATERIALS **PAGE 228** **10/01/16**

Add the paragraph following to the end of Section 421.03:

Obtain samples of the bitumen under the observation of the Engineer. The Engineer will take immediate possession of the samples.

422.03 MATERIALS **PAGE 232** **10/01/16**

Add the paragraph following to the end of Section 422.03:

Obtain samples of the bitumen under the observation of the Engineer. The Engineer will take immediate possession of the samples.

430.03 F Commercial Grade Asphalt **PAGE 238** **10/01/15**

Replace the second paragraph of Section 430.03 F with the following:

The requirements of the following sections will not be applied to commercial grade asphalt:

- Section 430.04 A, “Contractor Quality Control Plan”;
- Section 430.04 B, “Engineer’s Quality Assurance Plan”;
- Section 430.04 C.2, “Determination of Specific Gravity”;
- Section 430.04 E, “QC Testing”; and
- Section 430.04 M, “Acceptance”.

430.04 D.1 General **PAGE 241** **10/01/15**

Replace the third paragraph of Section 430.04 D.1 with the following:

Submit the mix design a minimum of 10 calendar days before beginning paving operations. The Engineer will review the mix design. If the Engineer does not approve the mix design, revise the mix design and submit the revised mix design. Allow 10 calendar days for the Engineer to review a revised mix design before beginning paving operations.

430.04 D.2 Items to be Submitted **PAGE 242** **10/01/15**

Add the following item to Section 430.04 D.2:

e. If the mix contains RAP, submit a 50 pound sample of the milled material.

430.04 F Surface Preparation **PAGE 246** **10/01/15**

Replace the second paragraph of Section 430.04 F with the following:

Correct local irregularities in the existing surface before placing the first lift of bituminous material. If milling is specified, correct local irregularities after milling. Apply a tack coat to the surface before correcting the irregularities. Use the same type of mix that is required for the subsequent lift Use a pneumatic roller as specified in Section 151.01 A.3. “Self-Propelled Pnuematic-Tired Roller” to compact the mix.

430.04 G Patching **PAGE 247** **10/01/15**

Replace Section 430.04 G with the following:

G. Patching.
Remove existing broken or unstable surface material and replace that material with the same mixture specified for the next course.

Place the bituminous material in lifts not to exceed 3 inches and compact the material. Allow the patch material to cool to 130°F before placing additional material. If patching is required during the paving operation, allow the patch material to cool to 185°F before placing additional material.

430.04 H.1 General **PAGE 248** **10/01/15**

Delete the ninth paragraph of Section 430.04 H.1

430.04 I.3.c Intermediate Rolling **PAGE 250** **10/01/15**

Replace the second paragraph of Section 430.04 I.3.c with the following:

If roller tires pick up the bituminous material or there are excessive roller marks in the mat, the Engineer may allow the removal of the intermediate rolling operation if it appears to the Engineer that compaction is being achieved.

430.04 J Joints **PAGE 250** **10/01/15**

Replace Section 430.04 J with the following:

J. Joints.

1. General.
Place pavement against the surface of curbing, gutters, manholes, and similar structures uniformly near the contact surfaces so the pavement is slightly higher than the edge of the structure after compaction. Do not construct a joint on top of a joint from a previous lift.

2. Longitudinal Joints.
Construct longitudinal joints on successive lifts between 6 and 12 inches from the previous longitudinal joint.

Place and follow markings to guide the paver. Construct joints in a uniform line. Correct pavement edges that deviate from the uniform line and correct areas of the joint that vary from the intended location of the joint by more than 2 inches. Construct joints with tight seams and no visible segregation.

3. Transverse Joints.
Construct transverse joints on successive lifts a minimum of 12 feet from the previous transverse joint.

430.06 A General **PAGE 253** **10/01/16**

Replace Commercial Grade Asphalt with:

Commercial Grade Hot Mix Asphalt

Add the following paragraph to the end of Section 430.06 A:

Include the cost of aggregate, asphalt cement, prime coat, and tack coat in the contract unit price for "Commercial Grade Hot Mix Asphalt."

550.03 Materials **PAGE 261** **10/01/15**

Add the following to Section 550.03:

Develop a mix design with a maximum water-cement ratio of 0.40 when placing concrete with a slip form paving machine. Use the water-cement ratio shown in Section 802.01 B.2, "Concrete Class Designation" for all other paving methods.

550.04 D.1 General **PAGE 263** **10/01/16**

Replace the fourth paragraph with the following:

Adjacent concrete may be used as a side form after the concrete has attained a minimum compressive strength of 3,000 psi or a minimum flexural strength of 450 psi.

550.04 H.1.d Final Surface Finish **PAGE 268** **10/01/15**

Replace Section 550.04 H.1.d with the following:

d. Final Surface Finish.

(1) General.
Uniformly texture the surface by dragging a seamless strip of stiff-fiber artificial grass carpet longitudinally along the full width of the pavement in a single pass.

Use and maintain a taut string line for operating the carpet drag. Attach the leading edge of the carpet drag to a bridge. If the Engineer determines it is not feasible to use a bridge or string line, other texturing methods will be allowed.

Maintain a clean carpet free of encrusted concrete.

Provide a minimum texture depth of 0.031 inches.

(2) Roadways with Speed Limits Less than 45 MPH.
The Engineer will test the texture achieved by the carpet drag in accordance with ASTM E 965 and the Field Sampling and Testing Manual. The Engineer will determine the test location.

If three or more lots have texture depths less than 0.031 inches but greater than or equal to 0.025 inches, perform diamond grinding on those lots.

Perform diamond grinding any lot having a texture depth of less than 0.025 inches.

Perform grinding as specified in Section 550.04 M.4, “Grinding.”

The Engineer will determine the limits of any failing test by running additional tests at 100 foot intervals before and after the failing test. The Engineer will determine the location of the additional tests.

(3) Roadways with Speed Limits 45 MPH or Greater.
Run a clean, metal tine longitudinally along the surface immediately following the carpet drag. Exclude areas within 3 inches of the edge of the slab and longitudinal joints. Run the tine continuously across transverse joints.

Use a tine that provides:
- 1/8 inch ±1/64 inch groove width;
- 3/16 inch ±1/16 inch groove depth; and
- 3/4 inch spacing of between grooves.

If the concrete has becomes too stiff to receive the metal tine finish, use diamond bladed equipment to produce the longitudinal grooves.

550.04 I.3 Impervious Membrane Cure **PAGE 271** **10/01/15**

Replace the first paragraph of Section 550.04 I.3 with the following:

Use a curing compound that meets the requirements of Section 810.01 B.2, “Type 2, Class B”.

550.04 M.3.a General **PAGE 273** **10/01/16**

Replace the first sentence of the first paragraph with the following:

The Engineer will determine the pavement smoothness by profiling the finished surface of the mainline pavement.

550.04 M.3.b Operation **PAGE 273** **10/01/16**

Replace the second paragraph with the following:

The Engineer will apply a liquidated damage of $1,500 per trip for each profile collected after the second profile.

570.03 A General **PAGE 281** **10/01/15**

Add the following item to the table:

Impervious Membrane Cure	810.01 B.1

570.03 B.2.a Concrete **PAGE 281** **10/01/15**

Replace Section 570.03 B.2.a with the following:

a. Concrete.
Use Class AE concrete with cement that meets the requirements of AASHTO M 85, Type I or Type IA for spall repairs.

570.03 D Curing Compound **PAGE 281** **10/01/15**

Delete Section 570.03 D.

570.04 A.1.b Full Depth Repairs **PAGE 282** **10/01/15**

Replace Section 570.04 A.1.b with the following:

b. Full Depth Repairs.
Use the lift out method to remove concrete in full depth repair areas with minimal disruption to the subgrade and without damage to the remaining concrete. Do not operate equipment, other than compaction equipment, in areas where concrete has been removed. Fill voids deeper than 1 inch with aggregate and compact the material to the level of the existing subgrade.

Place concrete for repairs less than 100 feet long the same day that removals are initiated. Place concrete for repairs longer than 100 feet within 48 hours of initiating removals. Dampen the faces of existing concrete before placing new concrete.

Place, consolidate, finish, and cure concrete according to the following portions of Section 550.04, “Construction Requirements”:

- 550.04 C, “Roadbed Condition”;
- 550.04 D, “Placing and Spreading Concrete”;
- 550.04 E, “Placing Reinforcing Steel and Tie Bars”;
- 550.04 F, “Uncontrolled Cracking”;
- 550.04 G, “Joints”;
- 550.04 H, “Finishing Concrete”, except parts 1.d, “Final Surface Finish” and 1.e, “Imprinting Pavement”;
- 550.04 J, “Removing Forms”;
- 550.04 K, “Sealing Joints”; and
- 550.04 L, “Opening to Traffic”.

Provide finished concrete that is flush with all adjacent pavement surfaces. Before the concrete sets, check the repair utilizing a 10 foot straight edge and correct areas that deviate by 1/8 inch or greater.

Texture the repair by dragging a carpet of artificial grass longitudinally over the repaired area.

If repairs involve multiple lanes, fill the gap between the lane under repair and the existing concrete with cold bituminous material. Remove this material before making the repair to the adjacent lane.

(1) Repairs One Lane Wide.

Use a bond breaker along the centerline joint. Tie bars are not required on repairs that are one lane wide.

When the repair falls in a ramp, restore the longitudinal joints crossing the repair, but do not use tie bars.

(2) Repairs Wider Than One Lane.

Before placing the concrete in the second lane, install 30 inch #5 tie bars in the longitudianl joint using the original tie bar pattern. Drill holes for the bars and secure the bars in the holes using epoxy.

(3) Impervious Membrane Cure.

Use a curing compound that meets the requirements of Section 810.01 B.1, “Type 2”.

Apply the cure at a minimum rate of 1 gallon per 150 square feet of pavement in one or two applications. If applying two coats, apply the second application within 30 minutes of the first application.

Protect joints that require sealing from infiltration of the curing compound.

Immediately cover the exposed sides of the concrete pavement with curing compound if removing forms exposes curing concrete before the expiration of the curing period.

Immediately reapply curing compound to damaged areas within the curing period.

570.04 A.2.c Dowel Bars **PAGE 284** **10/01/15**

Replace the first paragraph of Section 570.04 A.2.c with the following:

Drill 1-3/8 inch diameter holes using a rigid frame-mounted drill. Clean the hole, inject epoxy into the hole, and insert dowels.

570.04 A.3.a Concrete Removal **PAGE 285** **10/01/15**

Replace the third paragraph of Section 570.04 A.3.a with the following:

If existing reinforcing steel is damaged or bent within the 18 inch lap area, replace the damaged reinforcing steel.

570.04 C Grinding **PAGE 285** **10/01/15**

Replace the first paragraph of Section 570.04 C with the following:

Allow new concrete and dowel bar retrofit patch material to cure for a minimum of 24 hours before grinding.

570.04 C.6 Slurry Removal **PAGE 286** **10/01/15**

Replace Section 570.04 C.6 with the following:

6. **Slurry Removal.**
   Continuously collect all slurry or residue resulting from the grinding operation.

   In areas with speed limits of 45 mph or less and in areas with curb and gutter, dispose of slurry as specified in Section 107.17, “Removed Material”.

   In areas with speeds greater than 45 mph and without curb and gutter, slurry may be place on the foreslope of the roadway. Prevent slurry from entering pipes, culverts, storm drains, ravines, streams, waterways, wetlands, and all other water conveyances. Install erosion control features as necessary to prevent contamination, or dispose of slurry as specified in Section 107.17, “Removed Material”.

570.04 D.1 General **PAGE 286** **10/01/16**

Replace the first sentence of the first paragraph with the following:

The Engineer will determine the pavement smoothness by profiling the finished surface of the mainline pavement.

570.04 D.2 Operation **PAGE 286** **10/01/16**

Replace the second paragraph with the following:

The Engineer will apply a liquidated damage of $1,500 per trip for each profile collected after the second profile.

570.05 METHOD OF MEASUREMENT **PAGE 289** **10/01/16**

Add the following to Section 570.05:

E. Full-Depth Doweled.
Include the cost of the end dowel bars in the contract unit price "___-Inch Concrete Pavement Repair – Full-Depth Doweled". The cost for intermediate dowel bar assemblies is paid by "Doweled Contraction Joint Assembly".

570.06 BASIS OF PAYMENT **PAGE 289** **10/01/15**

Delete the following paragraph from Section 570.06:

Include all costs for saw cuts, steel reinforcing, bar supports, tie bars, and joint sealing in the unit price bid for "__Inch Concrete Pavement Repair - Full-Depth _____".

602.02 EQUIPMENT **PAGE 299** **10/01/16**

Add the following to Section 602.02.

E. Curing Concrete.
Use a fogging machine as specified in Section 156.02, "Fogger" for exposed surfaces.

602.03 A General **PAGE 299** **10/01/16**

Delete the last paragraph.

602.04 D Deck Finishing **PAGE 303** **10/01/16**

Replace Section 602.04 D with the following:

D. Deck and Bridge Approach Slab Finishing.
Following the screed operations, obtain the final surfacing with a 10 foot long scraping straightedge with a suitable handle. Ensure the final surface has the required crown and does not vary more than 1/8 inch from a 10 foot straightedge laid longitudinally thereon.

Pull a burlap or artificial grass drag over the surface in a longitudinal direction while the concrete is plastic.

Immediately following the artificial grass drag, run a clean metal tine transversely across the deck. Stop the tine 18 inches from the face of the barrier or curb and 6 inches from the beginning and end of the deck or approach slab. The tine may be hand-operated. Use a tine that provides:

- 1/8 inch ±1/64 inch groove width;
- 3/16 inch ±1/16 inch groove depth; and
- 3/4 inch spacing between grooves.

602.04 F.2 Deck Slab Concrete **PAGE 304** **10/01/16**

Delete Section 602.04 F.2 and replace with the following:

2. Deck and Bridge Approach Slab Concrete.
Cure the concrete surface by covering with a double thickness of burlap. Moisten the concrete surface using a light fog spray if the surface begins to dry after finishing and before placement of the wet cure. Keep the burlap continuously moist at all times.

During the curing process do not allow vehicles and equipment on the deck or approach slab and do not perform work on the deck or approach slab.

For deck slab concrete, place the wet cure burlap and start the wet cure within 15 minutes of the passing of the finishing machine.

602.04 G Barriers **PAGE 305** **10/01/16**

Delete Section 602.04 G and add the following:

G. Barriers.

1. General.
Use Class AAE-3 concrete for barriers.

Perform corrective actions of any surface that deviates by 3/8 inches or more when measured with a 10 foot straightedge. Make corrections by grinding, filling with an approved epoxy mortar, or replacing.

Except at expansion joints, construct V-grooves that are 3/4 inch wide and 3/4 inch deep in all faces of the barriers at each pier and at equal spaces between piers and abutments at approximately 10 foot spacing.

2. Conventional Forming.
Adequately tie forms to avoid any shifting during concrete placement.

If concrete inserts in the deck slab are holding the barrier forms in place, remove the inserts. Clean and fill the cavities flush with the deck slab using an epoxy resin adhesive.

3. Slipforming.
Conventional form a minimum distance of 4 feet on each side of expansion joints before slip forming.

After the reinforcement is installed, check the clear distance between the reinforcement and the slipform for the entire length of the pour.

The Engineer will allow slab overhang distance to be increased up to 1 inch provided the specified gutterline is maintained.

The Engineer will allow a radius to be used instead of a bevel on all edges of the barrier.

602.04 K.1 General **PAGE 307** **10/01/15**

Replace Section 602.04 K.1 with the following:

1. **General.**
   When shown in the plans, apply membrane and primer in dry weather and when the air temperature is above 40°F. Apply to surfaces that are dry, clean, free of sharp protrusions and above 40°F.

604.03 B.1 General **PAGE 309** **10/01/16**

Replace Section 604.03 B.1 with the following:

1. **General.**
   Develop a mix design that produces concrete that will achieve a minimum compressive strength of 5,000 psi within 28 days.

   Section 802.01 H, “Air Content” will not apply.

   Obtain the Engineer’s approval for admixtures before developing the mix design. Include approved ad mixtures in the mix design.

   Perform tests to determine the concrete’s compressive strength using 6 inch by 12 inch cylinders.

604.03 B.3 Trial Mix **PAGE 310** **10/01/15**

Replace the “AASHTO T 23” test requirement with “ND T 23:

604.03 E.1 Concrete **PAGE 310** **10/01/15**

Replace the “AASHTO T 23” test requirement with “ND T 23:

604.04 B Work Drawings **PAGE 311** **10/01/16**

Replace Section 604.04 B with the following:

B. Work Drawings.
Provide work drawings that include:
- Beam dimensions;
- Size and location of all reinforcing and prestressing steel including;
    - Strand layout;
    - Pull down locations;
    - Tensioning forces;
    - Elongation; and
    - Proposed changes in the reinforcing steel;
- Initial prestress forces;
- Location of handling hooks or devices; and
- Losses in the prestress due to:
    - Elastic shortening;
    - Shrinking or creeping of concrete; and
    - Relaxation of steel stress as determined by the Contractor method of stressing.

Submit calculations and work drawings that are signed, sealed, and dated by a Professional Engineer registered in the State of North Dakota as set forth in NDCC Title 43.

604.04 D Placing Concrete **PAGE 312** **10/01/16**

Replace Section 604.04 D with the following:

D. Placing Concrete.
Place concrete in forms made entirely of steel.

Vibrate concrete for the beams. Vibrate without displacement of reinforcing, conduits, voids, or wire. Vibrate for a sufficient duration and intensity to thoroughly consolidate the concrete without causing segregation.

Rough float and transversely broom the top of the beams.

606.04 A Design and Manufacture **PAGE 314** **10/01/15**

Replace the second paragraph in Section 606.04 A with the following:

Use an ACPA or NPCA certified plant in the construction.

624.03 B E-Rail Retrofit **PAGE 336** **10/01/16**

Replace ASTM A 307, Grade C with ASTM F 1554, Grade 36.

624.03 C Free Standing Rail Retrofit **PAGE 336** **10/01/16**

Replace ASTM A 307, Grade C with ASTM F 1554, Grade 36.

650.02 EQUIPMENT **PAGE 341** **10/01/16**

Replace the Equipment list with the following:

Equipment	Section
Mobile Mixer	155.03 C
Bridge Deck Overlays Finishing Equipment	155.07 D
Sawing	155.09
Grinding	155.11
Concrete Buggy	155.12
Fogger	156.02
Milling Machine	156.03

650.03 A Concrete **PAGE 342** **10/01/16**

Delete the last paragraph in its entirety.

650.03 B Low Slump Concrete **PAGE 342** **10/01/16**

Replace Section 650.03 B with the following:

B. Low Slump Concrete.

Item	Section
Fine Aggregate	802.01 C.3
Coarse Aggregate – Size 5	802.01 C.2
Concrete Admixtures	808
Burlap Cloth	810.01 A
Water	812

Use cement that meets the requirements of AASHTO M 85, Type I or Type IA.

Mix low slump concrete using 8.75 bags of cement per cubic yard and a maximum water-cement ration of 0.42.

Use coarse aggregate composed of crushed stone. Use crushed stone that has at least one fractured face on 75 percent of the particles retained on the number 4 sieve.

Entrain air within the concrete as specified in Section 802.01 H, “Air Content”, except supply concrete with an air content between 5.0 and 7.0 percent of the volume of the concrete at the time of placement.

Produce concrete that has a slump of 1 inch or less, when determined according to ND T 119.

Use a mobile mixer to produce low slump concrete.

650.04 C Removals with Hydrodemolition Equipment **PAGE 343** **10/01/16**

Add the following to 650.04 C:

In areas inaccessible for using hydrodemolition equipment, remove concrete using hand held hydrodemolition equipment or mechanical equipment.

650.04 C.1 Class 1H **PAGE 343** **10/01/16**

Delete the last paragraph in 650.04 C.1.

650.04 G Finishing **PAGE 345** **10/01/16**

Remove and replace the last paragraph of 650.04 G with the following:

Pull a burlap or artificial grass drag over the surface in a longitudinal direction while the concrete is plastic. Immediately follow the drag with a metal tine finish as specified in Section 602.04 D, “Deck and Approach Slab Finishing”.

650.04 I Curing **PAGE 345** **10/01/16**

Replace all instances of Section 602.04 F.2, “Deck Slab Concrete” with the following:

Section 602.04 F.2, “Deck and Bridge Approach Slab Concrete”.

702.06 Basis of Payment **PAGE 355** **10/01/15**

Replace the Table 702-01 with the following:

Table 702-01

Payment for Mobilization

Original Contract Amount Earned	Payment will be the Lesser of:	
	Mobilization Bid Amount	Original Contract Amount
5%	25%	2.5%
10%	50%	5.0%
50%	100%	7.5%
75%	100%	10.0%

704.04 B Traffic Control Device Condition Classifications **PAGE 359** **10/01/15**

Replace all instances of “ATSAA” in Section 704.04 B with “ATSSA”.

704.04 M Protection Vehicle with Truck Mounted Attenuation Device (TMA) **PAGE 366** **10/01/15**

Replace the last paragraph of 704.04 M with the following:

Equip the protection vehicle with an advance warning flashing or sequencing arrow panel conforming to Section 704.03 M, “Advance Warning Flasher or Sequencing Arrow Panel” and the MUTCD.

704.04 O Traffic Control for Uneven Pavement **PAGE 367** **10/01/15**

Replace all instances of “Sign W20-52-24” in Section 704.04 O with “W20-52-54”.

Change the title of Section 704.04 O.3.b to “Uneven Pavement Greater Than 2 Inches.”

706.02 A General **PAGE 372** **10/01/16**

Add the following to the end of Section 706.02 A:

Furnish Aggregate and Bituminous labs with DSL broadband internet and a router that broadcasts Wi-Fi and will allow for hard wiring of a computer.

706.02 B Aggregate Laboratory **PAGE 372** **10/01/15**

Replace Section 706.02 B with the following:

B. Aggregate Laboratory.

Place the laboratory at a location acceptable to the Engineer. The Engineer will have the full control and the exclusive use of the laboratory.

Provide a laboratory with a minimum floor area of 230 square feet, minimum exterior width of 8 feet, and a minimum ceiling height of 7 feet.

Partition the building into a minimum of two rooms, a smaller room having a floor area of approximately 70 square feet.

Provide a workbench with a length of 7 feet in the smaller room:

Provide the following equipment in the larger room:

1. Mechanical shaker capable of receiving 6 trays that have a screen size of 14 inches by 14 inches and the following compatible sieves:
   - 1-1/2 inch;
   - 1-1/4 inch;
   - 1 inch;
   - 3/4 inch;
   - 1/2 inch;
   - 3/8 inch;
   - No. 4; and
   - An enclosed dust pan.
2. Mary Ann shaker capable of being adjusted to receive 8 and 12 inch diameter sieves;
3. Splitter with a maximum hopper capacity of 0.6 cubic feet;
4. Splitter with a minimum hopper capacity of 1.0 cubic feet; and
5. An exhaust fan capable of changing the air in the room every minute.

709.04 C Geosynthetic Geogrid (Type G) **PAGE 376** **10/01/15**

Replace Section 709.04 C with the following:

C. Geosynthetic Geogrid (Type G).

Unroll geogrid parallel to the centerline of the road. Do not drag the geogrid across the underlying material. Use geogrid widths that produce overlaps of parallel rolls at the centerline and at the shoulders and so that no overlaps are required along wheel paths.

Overlap geogrid a minimum of 30 inches at all splices and joints when placing on subgrade. Overlap geogrid a minimum of 12 inches at all splices and joints when placing on base.

Construct overlaps at the end of a roll so the previous roll laps over the subsequent roll in the direction of the cover material placement. Mechanically tie transverse joints to maintain the minimum overlap. Place pins, staples, or small piles of aggregate to maintain the geogrid position before placement of cover material.

Stagger end overlaps at least 10 feet from other end overlaps in parallel rolls. Cut or increase overlaps to conform to curves.

Patch damaged areas of geogrid. Place a patch that overlaps the damaged area by 36 inches on all sides. Mechanically tie the patch to the underlying grid.

Place the first lift of material over geogrid installed on subgrade to a depth of 10 inches of loose material. Place the first lift of material over geogrid installed on base to a depth of 6 inches of loose material.

Use low ground pressure equipment to spread the initial lift of material. If rutting occurs, fill the ruts with additional material before placing the subsequent lift. Do not blade out ruts. Do not turn construction equipment on the first layer of material.

714.03 A Culverts and Storm Drains **PAGE 378** **10/01/16**

Replace the last paragraph of Section 714.03 A with the following:

Provide mortar consisting of a mixture of one part Portland Cement to two parts mortar sand, and sufficient water to furnish proper consistency.

Where placing new end sections on existing pipe, identify whether the type of end section needed is male or female.

714.04 A.1 Bedding **PAGE 379** **10/01/15**

Delete the first paragraph from Section 714.04 A.1.

714.04 A.5 Culverts and Storm Drains **PAGE 380** **10/01/16**

Replace the second paragraph of 714.04 A.5 with the following;

The Engineer will visually inspect all metal and thermoplastic pipe under unpaved approaches for deflection. If the Engineer sees any deflection, the Engineer will require the Contractor to pass a nine point mandrel or other approved object through the pipe to check for deflection. Use a mandrel with a diameter not less than 95 percent of the inside diameter of the pipe. If the mandrel cannot be passed through the pipe, replace the pipe.

714.04 A.6 Connection to Manholes, Inlets, and Pipes **PAGE 380** **10/01/15**

Replace Section 714.04 A.6 with the following:

6. **Connection to Manholes, Inlets, and Pipes.**
   If connections are required to a manhole, inlet barrel, or pipe entrance, connect pipe by cutting the opening and grouting in the connecting pipe.

714.04 A.7 Compaction Control for Aggregate **PAGE 380** **10/01/15**

Replace Section 714.04 A.7 with the following:

7. Compaction Control for Aggregate.
Compact aggregate according to Section 203.04 E.2, "Compaction Control, Type A" The moisture content of the aggregate at the time of compaction shall be not less than 2.0 percentage points below, nor more than 3.0 percentage points above the optimum moisture content.

Compact aggregate for approach pipes according to the conduit manufacturer's recommendation

Use a maximum lift thickness of 6 inches.

714.04 A.8 Compaction Control for Non-Aggregate Material **PAGE 380** **10/01/15**

Replace Section 714.04 A.8 with the following:

8. Compaction Control for Non-Aggregate Material.
If Common Excavation Type A is specified, follow the compaction requirements in Section 203.04 E.2, "Compaction Control, Type A". If Common Excavation Type B is specified, follow the compaction requirements in Section 203.04 E.3, "Compaction Control, Type B".

Compact material for approach pipes according to the conduit manufacturer's recommendations.

748.03 MATERIALS **PAGE 393** **10/01/15**

Add the following item to the table:

Impervious Membrane Cure	810.01 B.1 or 810.01 B.2

750.03 MATERIALS **PAGE 395** **10/01/15**

Add the following item to the table:

Impervious Membrane Cure	810.01 B

Replace the paragraph directly after the table with the following:

For imprinted concrete use any size coarse aggregate specified in Section 802.01 C.2, "Coarse Aggregate". Produce a mix that consists of 60 percent fine aggregate and 40 percent coarse aggregate

---

754.04 D.2 Anchor for Telescoping Perforated Tubes Supports **PAGE 403** **10/01/15**

Replace the last two paragraphs in Section 754.04 D.2 with the following:

If installation is in either concrete or bituminous material, omit the soil plate or use a surface mount anchor base.

Core concrete and bituminous surfacing before installing the anchor unit and fill the cored area with like material that matches the surrounding surfacing.

754.04 F Removing and Resetting Signs and Supports **PAGE 407** **10/01/15**
10/01/16

Replace the Section 754.04 F with the following:

F. Removing and Resetting Signs and Supports.

1. General.
Remove and reset existing signs and supports as specified. Stockpile all signs and supports not to be reset at designated locations within the project limits. The Engineer will arrange to have stockpiled signs removed from the project limits and delivered to the Department's facility.

Replace removed or reset signs and supports that are damaged during removing, resetting, or stockpiling at no additional cost to the Department.

Remove existing signs and supports as construction progresses, and immediately reset or install new signs.

The Engineer will allow the temporary reset of existing signs, or the temporary installation of new signs. Include the cost of installing and resetting signs temporarily in the price bid for other items.

2. Reset Sign Panel.
Remove sign panels from existing supports. Reinstall sign panels, angles, stringers, and steel channels on new supports.

Provide all necessary brackets and hardware to attach sign panels, angles, stringers, and steel channels on new supports.

3. Reset Sign Support.
Remove sign panels from existing supports. Reinstall support and install new sign panels, angles, stringers, and steel channels.

Provide all necessary brackets and hardware to attach sign panels, angles, stringers, and steel channels on supports.

754.04 I Overlay Panel Sign Refacing **PAGE 407** **10/01/15**

Replace the second paragraph of Section 754.04 I with the following:

Remove the legend, border, and symbol on those signs that have demountable copy and remove any existing sign overlays and place overlay panels on the signs. Do not remove direct applied sheeting legends, borders, and symbols. Direct apply the new legends, borders, and symbols to the overlay panels and install on the existing signs.

754.04 J Auxiliary Signs **PAGE 408** **10/01/15**

Replace the Section 754.04 J with the following:

J. Auxiliary Signs.
Install auxiliary signs used with route markers with the same background color as the route markers:

- Interstate, Blue;
- Interstate Business Loop, Green;
- State, White;
- US, White; and
- County, Blue.

754.05 METHOD OF MEASUREMENT **PAGE 408** **10/01/15**

Add the following to Section 754.05:

D. Reset Sign Panel.
The Engineer will measure the item "Reset Sign Panel" by the number of locations a sign or sign assembly has been reset.

E. Reset Sign Support.
The Engineer will measure the item "Reset Sign Support" by each leg of a sign support that has been reset.

760.03 Materials **PAGE 410** **10/01/15**

Replace Section 760.03 with the following:

760.03 MATERIALS
Use one of the following materials when applying a fog coat to rumple strips:
- SS-1h, Section 818.02 F, "Anionic Emulsified Asphalt";
- MS-1 Section 818.02 F, "Anionic Emulsified Asphalt"; or
- CSS-1h Section 818.02 E.1 "Cationic Emulsified Asphalt".

When MS-1 is used it may be diluted by the supplier or the Contractor.

760.04 F Traffic Control **PAGE 411** **10/01/15**

Replace Section 760.04 F with the following:

F. Traffic Control.

1. General.
Use a TMA as specified in Section 704.04 M, "Protection Vehicle with Truck Mounted Attenuation Device (TMA)".

2. Centerline Rumble Strip Installation.
Provide flaggers and 2 sets of the required flagger signing for each direction of travel. Ensure that at least one set of the required flagger signing is in place in each direction of travel whenever work centerline installation is performed. Limit the work area to a maximum of 3 miles.

760.05 METHOD OF MEASUREMENT **PAGE 411** **10/01/15**
10/01/16

Add the following to the end of Section 760.05:

The Engineer will measure flagging and traffic control signs as specified in Section 704.05, “Method of Measurement.

The Engineer will count each leg of an intersection receiving rumbles strips as one “Set”.

760.06 BASIS OF PAYMENT **PAGE 411** **10/01/15**
10/01/16

Delete “Rumble Strips – Intersection, Each” and replace with “Rumble Strips – Intersection, Set”.

Add the following paragraph after the list of pay items in Section 760.06:

Flagging and traffic control signs will be paid for as specified in Section 704.06, “Basis of Payment”.

762.04 A.4 Grooved Pavement Markings **PAGE 413** **10/01/16**

Replace Section 762.04 A.4 with the following:

4. Grooved Pavement Markings.

a. General.
For messages, groove the same area as the messages. Do not groove a rectangular area to contain the message.

After grinding, blow the grooved slot clean to remove any residue and loose material before the installation of the pavement marking. When wet-grinding, immediately pressure wash the grooved slot to remove residue.

b. Grooves for Preformed Patterned Pavement Marking Film.
If specified in the plans, groove a recess into the pavement surface for each stripe that meets the tolerances specified in Table 762-01.

Table 762-01
Preformed Patterned Pavement Marking Film Grooves

Parameter	Tolerance
Depth	90 to 110 mils
Smoothness	Ridges, within the groove, shall be no more than 6 mils higher than either adjacent valley
Width	line width plus 1/2 inch
Length	line length plus 3 inches per end of line
Line End Tapers	3 inches

If pavement marking installation does not occur within 24 hours of grinding, sandblast the groove and install the pavement markings the same day the sandblasting occurs.

c. Grooves for Epoxy Paint.
If specified in the plans, groove a recess into the pavement surface for each stripe that meets the tolerances specified in Table 762-02.

Table 762-02
Epoxy Paint Grooves

Parameter	Tolerance
Depth	45 to 55 mils
Smoothness	Ridges, within the groove, shall be no more than 6 mils higher than either adjacent valley
Width	line width plus 1 inch
Length (skips)	line length plus 3 inches per end of line
Line End Tapers	3 inches

After creating the groove, prepare the surface in accordance with the manufacturer's instruction.

762.04 C.1.a Application **PAGE 415** **10/1/16**

Delete the last paragraph of Section 762.04 C.1.a.

762.04 C.1.b. Data Logging System (DLS) **PAGE 415** **10/1/16**

Replace the first paragraph of Section 762.04 C.1.b with the following:

The use of a computerized DLS is required for monitoring the application of water based paint and epoxy pavement markings when the plan quantity of long lines for liquid pavement marking is 30,000 linear feet or greater.

762.04 C.2.a Method of Application **PAGE 416** **10/1/16**

Replace Section 762.04 C.2.a with the following:

a. Method of Application.
Allow new bituminous treatment to cool to a temperature below 125°F and cure for a period of 72 hours before applying permanent pavement marking.

Apply pavement marking paint and glass beads separately by machine. Use hand application where machine application is not feasible.

Apply water based paint when the air and pavement surface temperatures are 45°F or warmer. Do not apply paint when the air or pavement surface temperatures are forecasted to be colder than the minimum application temperature during the curing period of the paint. Apply pavement marking paint and beads only during daylight hours.

762.04 C.3.a General **PAGE 417** **10/1/16**

Replace the last paragraph of Section 762.04 C.3.a with the following:

Place epoxy material after bituminous material has been in place for a minimum of 14 days.

762.04 D.2 Short-Term Pavement Marking – Type NR (Non-Removable) **PAGE 418**
10/01/15

Replace the second paragraph of Section 762.04 D.2 with the following:

Place the short term pavement markings at the rate specified in Section 762.04 C.2.b, “Rate of Application” with the following exception:

Exception: When the permanent pavement marking is specified as epoxy paint, apply the short term pavement marking at a thickness of 10 mils.

762.04 D.3 Short-Term Pavement Marking – Type R (Removable) **PAGE 419** **10/01/15**

Replace Section 762.04 D.3 with the following:

3. **Short-Term Pavement Marking – Type R (Removable).**
   Install Type R markings when the air and pavement temperatures are at a minimum of 50°F and expected to remain above 50°F.

   If the air or pavement temperature falls below 50°F during installation, Type NR markings may be installed as specified in Section 762.04 D.2, “Short-Term Pavement Markings – Type NR (Non-Removable)”. Install Type R markings once the specified temperatures exist.

   Remove Type R markings once they are no longer necessary for traffic control operations. If Type NR markings were substituted for Type R markings, remove the Type NR markings using a method that does not leave a scar on the pavement.

762.06 Basis of Payment **PAGE 419** **10/01/15**

Add the following to the end of the first paragraph:

If Type NR markings are substituted for Type R markings due to temperature requirements, the markings will be paid for at the contract unit price for Type R markings.

766.04 CONSTRUCTION REQUIREMENTS **PAGE 425** **10/01/15**

Replace Section 766.04 with the following:

766.04 CONSTRUCTION REQUIREMENTS

A. General.
The mailbox owner will furnish a postal service approved mailbox. Install the furnished mailbox on the new support system.

B. Temporary Relocation.
If construction activities require the removal of the support system and delayed installation of the new support system, reset the existing support system at a location approved by the Engineer and postal service.

If construction activities require the removal of the support system and delayed installation of the new support system, relocate mailboxes to a location approved by the Engineer and postal service.

If existing mailboxes meet NCHRP 350 or MASH requirements, they may be reset adjacent to the roadway. If existing mailboxes do not meet NCHRP 350 or MASH requirements perform one of the following actions:

- Place them outside the clear zone;
- Place them on a 4 × 4 inch post; or
- Reset them using assemblies shown in the plans.

After construction has progressed to allow permanent installation, install the mailbox assemblies and mailboxes at the specified locations.

770.04 C. Concrete Foundation **PAGE 428** **10/01/16**

Add the following to Section 770.04 C:

Install anchor bolts according to Section 754.04 D.5.b, “Anchor Bolt Installation”.

770.04 D.1 General **PAGE 428** **10/01/15**

Add the following to the end of Section 770.04 D.1:

Install duct seal on all conduits containing cables at controller cabinets, traffic signal bases, and pull boxes.

770.04 G Light Standards **PAGE 430** **10/01/16**

Replace the first paragraph of Section 770.04 G with the following:

Plumb the light standard with leveling nuts. Adjust the leveling nuts on assembled light standards before 10:00 am. Tighten anchor nuts according to Section 754.04 D.5.c “Anchor Bolt Tightening”.

772.03 D Wiring Diagrams **PAGE 434** **10/01/15**

Replace the first paragraph with the following:

At the time the cabinet and control equipment is accepted, furnish a traffic signal cabinet wiring diagrams showing all circuits and parts in detail. Place the wiring diagram in the signal cabinet and submit one PDF copy to the Engineer.

772.04 A General **PAGE 435** **10/01/15**

Replace the second paragraph with the following:

Provide and bear all costs for the electrical service necessary to operate and maintain the traffic signal system until the system is accepted as specified in Section 772.04 N.3, “Supplemental Inspections and Final Acceptance”.

772.04 E.8 Final Testing **PAGE 439** **10/01/15**

Replace Section 772.04 E.8 with the following:

After installing sealer, perform the tests specified in Section 772.04 E.6, “Initial Testing”. Record the test results on SFN 60844 *Traffic Signal Loop Detector Test Report* and submit the form to the Engineer.

772.04 G Traffic Signal Standards and Combination Signal and Light Standards **PAGE 439** **10/01/15**

Replace number 3 with the following:

Install and tighten the anchor bolts as specified in Section 754.04 D.5, “Overhead Sign Structures”.

772.04 N Tests and Acceptance **PAGE 442** **10/01/15**

Replace 772.04 N with the following:

1. **General.**
   Furnish all instruments and personnel required for testing and record test results. If a subcontractor performed electrical work, ensure the subcontractor is present during testing and inspection.

   The Engineer will perform the initial and final inspections when:
   - Winds are 30 mph or less;
   - Ambient temperature is 15°F or greater; and
   - It is not raining or snowing.

   a. **Malfunction Management Unit Test.**
   Before uncovering the signal heads, perform a malfunction management unit test. Record the test results on SFN 60836 *Traffic Signal Malfunction Management Unit Test* and submit the results to the Engineer.

   b. **Ground Test.**
   Before opening to traffic, perform a ground test. The maximum allowable resistance at the controller cabinet is 10 Ohms. The maximum allowable resistance at each traffic signal standard is 25 Ohms. Record and submit the test results on SFN 60834, *Traffic Signal Ground Test*.

2. **Initial Inspection.**
   After the signal system is operational and open to traffic, submit a request to schedule the initial inspection. The system must be fully operational for a minimum of 15 days before the Engineer will perform the initial inspection. The Engineer will record the inspection results on form SFN 59867, *Traffic Signal Inspection* Checklist or SFN 60845 *Flashing Beacon Inspection Checklist*. Copies of completed forms will be sent to the Contractor.

3. **Supplemental Inspections and Final Acceptance.**
   After performing corrections, submit a request for a supplemental inspection. The Engineer will perform a supplemental inspection within 30 days of receiving the request.

If this inspection discloses any unsatisfactory items, the Engineer will provide the Contractor with a written list of items that require correction. After correcting the items, request another supplemental inspection.

If the Engineer determines that the work is complete, the signal system must operate for 14 consecutive days without interruption from defective equipment or improper workmanship.

If the signal system fails within the 14 days, make necessary repairs. After repairs are complete, request another supplemental inspection.

If the signal system operates for 14 consecutive days without interruption from defective equipment or improper workmanship, the Engineer will consider the last supplemental inspection as the final inspection and will accept the signal system.

802.01 A.1 Development **PAGE 453** **10/01/16**

Replace the second paragraph of Section 802.01 A.1 with the following:

Design a mix that will attain a compressive strength of 3,000 psi after 7 days or a flexural strength of 450 psi after 7 days. Mix designs used for Section 550, “Concrete Pavement” will be required to attain both a compressive strength of 3,000 psi and a flexural strength of 450 psi after 7 days. Measure compressive strength according to AASHTO T 22 and flexural strength according to AASHTO T 97. Apply a correction factor of 0.92 when using 4 inch x 8 inch concrete cylinders.

802.01 C.2 Coarse Aggregate **PAGE 454** **10/01/15**

Replace Table 802-02 with the following:

Table 802-02
Miscellaneous Coarse Aggregate Properties

Test	Method	Max. Percent by Weight of the Plus No. 4 fraction
Shale	NDDOT 3	0.7
Iron oxide particles	NDDOT 3	4.0[1]
Lignite and other coal	NDDOT 3	0.5
Soft Particles (Excluding Shale, Iron oxide particles and Lignite and other coal)	NDDOT 3	2.5
Thin or Elongated Pieces	NDDOT 3	15
L.A. Abrasion	AASHTO T 96	40.0
Soundness (Sodium Sulfate)	AASHTO T 104	12

[1] For concrete for spall repairs and bridge deck overlays, the maximum iron oxide particles shall be 2.0 percent.

802.01 C.3 Fine Aggregate **PAGE 454** **10/01/15**

Replace the second paragraph of Section 802.01 C.3 with the following:

Test fine aggregates in accordance with AASHTO T 21. If the results of the analysis are darker than the standard color, determine the compressive strength of mortar mixed using the aggregate in accordance with AASHTO T 71. If the results of the AASHTO T 71 test result in a relative strength less than 95 percent, do not use the fine aggregate.

802.01 J Tests on Concrete **PAGE 457** **10/01/16**

Delete 802.01 J "Tests on Concrete" and replace with the following:

J. Tests on Concrete.
Furnish the concrete necessary for the tests.

Near the site of concrete placement, provide a level area protected from construction activities near the site of placement for the Engineer to conduct tests.

810.01 B Liquid-Membrane-Forming Compounds **PAGE 464** **10/01/15**

Add the following to the end of Section 810.01 B:

3. Curing Compound for Pigmented Concrete.
Use a curing compound when curing pigmented concrete that meets the requirements of ASTM C 309 Type 1-D.

816.03 AGGREGATES FOR BLOTTER AND SEAL COATS **PAGE 467** **10/01/16**

Replace Table 816-02 with the following:

Table 816-02
Aggregates for Blotter and Seal coats

Sieve Size Or Testing Method	Aggregate Class					
	41	41M	42	43	44	45
	Percent Passing or Testing Requirement					
5/8 inch					100	
3/8 inch	100					100
No. 4	20-70				90-100	85-100
No. 8	0-17		2-20	0-17		
No. 16						45-80
No. 50						10-30
No. 200	0-1.5		0-5	0-2	0-20	0-3
ND T 113, Shale (max %)	8.0%					3.0%
AASHTO T 96, L.A. Abrasion (max %)	40%					

Table 816-02
Aggregates for Blotter and Seal coats

Sieve Size Or Testing Method	Aggregate Class					
	41	41M	42	43	44	45
	Percent Passing or Testing Requirement					
NDDOT 4, Fractured Faces[1]		50%				

[1] Minimum weight percentage allowable for the portion of the aggregate retained on a No. 4 sieve having at least 1 fractured face for Class 41M.

816.04 AGGREGATE FOR MICRO SURFACING **PAGE 467** **10/01/15**

Replace Section 816.04 with the following:

816.04 AGGREGATE FOR MICRO SURFACING

A. General.

Use aggregate that is manufactured crushed stone such as granite, slag, limestone, or other high quality aggregate or combination thereof.

Before stockpiling aggregate, perform the tests specified in Table 816-03.

Table 816-03

Test	Test Method	Requirement
Soundness of Aggregates by Use of Sodium Sulfate	AASHTO T 104	15% Max
Resistance to Degradation of Small-Size Coarse Aggregate by Abrasion and Impact in the Los Angeles Machine[1]	AASHTO T 96	30% Max
Deleterious Substances	ND T 176	60 or Higher

[1] Perform the AASHTO T 96 test on the parent aggregate

B. Mix Design.

Develop a mix design using aggregate that meets the requirements of Table 816-04. Establish mix design target values for each sieve and submit the mix design before beginning placement operations.

Table 816-04
Aggregate Gradation for Development of Mix Design

SIEVE SIZE	TYPE II %PASSING	TYPE III %PASSING
3/8”	100	100
#4	90 – 100	70 – 90
#8	65 – 90	45 – 70
#16	45 – 70	28 – 50
#30	30 – 50	19 – 34
#50	18 – 30	12 – 25
#100	10 – 21	7 – 18
#200	5 – 15	5 – 15

C. Stockpile Tolerances.

The mix design target values will be used for acceptance of material. Gradation tests may vary from the mix design target values based on the stockpile tolerance shown in Table 816-05. The percent passing each sieve for gradation tests may not fall outside the gradation limits specified in Table 816-04.

Table 816-05

SIEVE SIZE	STOCKPILE TOLERANCE
3/8”	-
#4	± 5%
#8	±5%
#16	±5%
#30	±5%
#50	±4%
#100	±3%
#200	±2%

D. Acceptance.

1. Stockpile Testing.
Perform a gradation test in accordance with ND T 11 and ND T 27 for every 500 tons of material produced and placed in the stockpile. Also perform test ND T 176 when performing gradation tests. Submit the test results to the Engineer.

The Engineer will perform acceptance testing. If the result of the Engineer’s testing lead to rejection of the stockpile, additional material may be blended with the stockpiled material so that the stockpile meets the requirements. The Engineer will resample and retest for both gradation and deleterious substances to determine if the stockpiled material will be accepted.

If choosing to blend additional material into the stockpile, use additional material that meets the requirements of Table 816-06. After blending, develop and submit a new mix design.

2. Gradation.
The Engineer will obtain 5 independent samples from the stockpile and perform a gradation analysis in accordance with ND T 11 and ND T 27. If the average gradation for each sieve is within the stockpile tolerance of the mix design target values, the Engineer will accept the material.

If the stockpile is rejected, additional material may be blended with the stockpiled material to obtain the required gradation. The Engineer will resample and retest to determine if the stockpiled material will be accepted.

If choosing to blend additional material into the stockpile, use additional material that meets the requirements of Table 816-03. After blending, develop and submit a new mix design.

3. Deleterious Substances.
The Engineer will determine the amount of deleterious substances in the aggregate using the same samples obtained in Section 816.04 D.2, “Gradation”. If the average of the test results is 60 or higher, the Engineer will accept the material.

Replace Section 816.05 with the following:

816.05 AGGREGATE FOR SLURRY SEAL

A. General.

Use aggregate that is manufactured crushed stone such as granite, slag, limestone, or other high quality aggregate or combination thereof. Use aggregate with 100 percent of the parent aggregate larger than the largest stone in the specified gradation.

Before stockpiling aggregate, perform the tests specified in Table 816-06.

Table 816-06

Test	Test Method	Requirement
Soundness of Aggregates by Use of Sodium Sulfate	AASHTO T 104	15% Max
Resistance to Degradation of Small-Size Coarse Aggregate by Abrasion and Impact in the Los Angeles Machine[1]	AASHTO T 96	35% Max
Deleterious Substances	ND T 176	60 or Higher

[1] Perform the AASHTO T 96 test on the parent aggregate

B. Mix Design.

Develop a mix design using aggregate that meets the requirements of Table 816-07. Establish mix design target values for each sieve and submit the mix design before beginning placement operations.

Table 816-07
Aggregate Gradation for Development of Mix Design

SIEVE SIZE	TYPE II %PASSING	TYPE III %PASSING
3/8”	100	100
#4	90 – 100	70 – 90
#8	65 – 90	45 – 70
#16	45 – 70	28 – 50
#30	30 – 50	19 – 34
#50	18 – 30	12 – 25
#100	10 – 21	7 – 18
#200	5 – 15	5 – 15

C. Stockpile Tolerances.

The mix design target values will be used for acceptance of material. Gradation tests may vary from the mix design target values based on the stockpile tolerance shown in Table 816-08. The percent passing each sieve for gradation tests may not fall outside the gradation limits specified in Table 816-07.

Table 816-08

SIEVE SIZE	STOCKPILE TOLERANCE
3/8”	-
#4	± 5%
#8	±5%
#16	±5%
#30	±5%
#50	±4%
#100	±3%
#200	±2%

D. Acceptance.

1. Stockpile Testing.
Perform a gradation test in accordance with ND T 11 and ND T 27 for every 500 tons of material produced and placed in the stockpile. Also perform test ND T 176 when performing gradation tests. Submit the test results to the Engineer.

The Engineer will perform acceptance testing. If the result of the Engineer’s testing lead to rejection of the stockpile, additional material may be blended with the stockpiled material so that the stockpile meets the requirements. The Engineer will resample and retest for both gradation and deleterious substances to determine if the stockpiled material will be accepted.

If choosing to blend additional material into the stockpile, use additional material that meets the requirements of Table 816-06. After blending, develop and submit a new mix design.

2. Gradation.
The Engineer will obtain 5 independent samples from the stockpile and perform a gradation analysis in accordance with ND T 11 and ND T 27. If the average gradation for each sieve is within the stockpile tolerance of the mix design target values, the Engineer will accept the material.

3. Deleterious Substances.
The Engineer will determine the amount of deleterious substances in the aggregate using the same samples obtained in Section 816.05 D.2, “Gradation”. If the average of the test results is 60 or higher, the Engineer will accept the material.

817.01 D.2.a Extraction Test Method **PAGE 472** **10/01/15**

Replace the second paragraph of Section 817.01 D.2.a with the following:

The Engineer will determine the percentage of asphalt binder in the stockpile in accordance with AASHTO T 164 and average the results obtained from the three samples. The material will be rejected if any single sample has a value greater than 4.0 percent or the average extraction is greater than 3.5 percent. If the stockpile is rejected, the stockpiled material may be blended with other material.

818.02 E.2 Modified Cationic Emulsified Asphalt **PAGE 474** **10/01/16**

Replace the second paragraph of Section 818.02 E.2 with the following:

Use asphalt with a maximum 3.0 percent oil distillate by volume of emulsified asphalt when tested according to AASHTO T 59, Residue and Oil Distillate by Distillation on Emulsified Asphalt. Use the manufacturer's recommended distillation temperature when using CRS-2P emulsion.

818.03 Bituminous Materials for Micro Surfacing **PAGE 475** **10/01/15**

Replace Table 818-01 with the following:

Table 818-01

Test	Specification	Requirement
Settlement and Storage Stability of Emulsified Asphalts, 24-h	AASHTO T 59	1% Minimum
Distillation of Emulsified Asphalt[1]	AASHTO T 59	62% Minimum
Tests on Emulsified Asphalt Residue		
Softening Point of Bitumen (Ring and Ball Apparatus)	AASHTO T 53	135°F Minimum

[1] Hold the temperature for this test at 350°F for 20 minutes.

822.02 TESTING **PAGE 477** **10/01/16**

Replace the first sentence of Section 822.02 with the following:

Provide a repellent that, when applied to concrete, meets the following requirements:

826.02 B.1 Sealant **Page 479** **10/01/16**

Replace Section 826.02 B.1 with the following:

1. **Sealant.**
   Provide a one-part silicone joint sealant that meets the requirements of ASTM D 5893, Type NS and the following:
   - Low modulus; and
   - Is capable of withstanding repeated joint movement between 50 percent shrinkage and 100 percent expansion without losing adhesion to the concrete and without cohesion failure.

826.02 B.2 Backer Rod **PAGE 479** **10/01/16**

Replace the first paragraph of Section 826.02 B.2 with the following:

Use backer rod that meets the requirements of ASTM D 5249, Type 1 or Type 3.

830.01 CONCRETE PIPE AND DRAINAGE STRUCTURES PAGE 480 10/01/16

Replace Section 830.01 with the following:

830.01 CONCRETE PIPE AND DRAINAGE STRUCTURES
The Department will evaluate the fabricator's concrete pipe plant according to Department procedures described in Field Sampling and Testing Manual, Quality Assurance Program for Prestressed and Precast Concrete Products. The results of this evaluation will determine if the material may be accepted by certificate of compliance as specified in Section 106.01 C "Certificate of Compliance."

Use an ACPA or NPCA certified plant in the construction.

A. Reinforced Concrete Culvert, Storm Drain, and Sewer Pipe.
Provide pipe that meets AASHTO M 170, M 206, or M 207 for the specified diameters and strength class except use aggregates that meet the requirements in:
- Table 802-02 of Section 802.01 C.2 "Course Aggregate"
- Table 802-05 of Section 802.01 C.3 "Fine Aggregate"

B. Work Drawings.
Provide work drawings for Class IV and V Pipes that include:
- Reinforcing steel layouts;
- Type and strength of concrete and reinforcing steel;
- All concrete and reinforcing dimensions;
- Installation and handling instructions; and
- Design calculations.

Submit calculations and work drawings that are signed, sealed, and dated by a Professional Engineer registered in the State of North Dakota as set forth in NDCC Title 43.

C. Fasteners and Tie Bolts.
Provide tie bolts and nuts that are of steel meeting ASTM A 307 Grade A. Provide steel washers that meet ASTM A 1008 or ASTM A 1011. Provide fastener castings that are gray iron castings that meet ASTM A 48 Class 20.

834.03 A.2 Rotational Capacity Testing of Assemblies PAGE 483 10/01/16

Replace Section 834.03 A.2 with the following:

2. Rotational Capacity Testing of Assemblies.
Perform the rotational capacity test according to ASTM A 325, except as modified by this specification.

a. General.
Perform rotational capacity tests on all bolt, nut, and washer assemblies before shipping.

If galvanized parts are required, perform the rotational capacity test after galvanization.

Washers are required as part of the tests even if the final assembly does not require washers.

b. Assemblies.
Test each combination of bolt lot, nut lot, and washer lot as an assembly.

c. Rotational Capacity Lot Numbers.
Assign each combination of lots a rotational capacity lot number. Washers do not need to be identified as part of the assembly lot if they are not required in the final assembly.

d. Testing Frequency.
Test a minimum of two assemblies per rotational capacity lot.

e. Testing Device.
Use a Skidmore-Wilhelm Calibrator, or an approved alternate, to perform the rotational capacity tests.

Test bolts that are too short for the Skidmore-Wilhelm Calibrator in a steel joint. The tension requirements of Table 834-02 do not apply. Compute the maximum torque required in Section 834.03 A.2.g, "Results" using a value of "P" equal to the Turn Test Tension in Table 834-02.

f. Performance of the Test.
The minimum rotation from initial tightening (10 percent of the specified proof load) shall be as specified in Table 834-01.

Table 834-01

Bolt Length	Amount of Turn
Length ≥ 4 diameters	240 degrees (2/3 turn)
4 diameters < Length ≤ 8 diameters	360 degrees (1 turn)
Length > 8 diameters	480 degrees (1-1/3 turn)

The tension reached at the rotation specified in Table 834-01 shall be equal to values for the Turn Test Tension shown in Table 834-02.

Table 834-02

Diameter (in)	**1/2**	**5/8**	**3/4**	**7/8**	**1**	**1-1/8**	**1-1/4**	**1-3/8**	**1-1/2**
Installation Tension (kips)	12	19	28	39	51	56	71	85	103
Turn Test Tension (kips)	12	22	32	45	59	64	82	98	118

g. Results.
After exceeding the Installation Tension specified in Table 834-02, obtain and record a reading of the tension and torque.

The maximum torque (T) shall be equal to 0.25 the measured bolt tension (P) and the bolt diameter (D):

$$T \text{ (foot pounds)} \leq 0.25 \times P\text{(pounds)} \times D\text{(feet)}$$

856.01 A General **PAGE 495** **10/01/15**

Replace the "Slope Gradient" row in Table 856-01 with the following:

Slope Gradient Application	≤ 3H:1V	< 3H:1V - 2H:1V	≤ 2H:1V	< 2H:1 - 1.5H:1V

860.02 A Barbed Wire **PAGE 501** **10/01/15**

Replace Section 860.02 A with the following:

A. Barbed Wire.
Provide barbed wire that meets the requirements of AASHTO M 280. Provide wire that has a minimum gage of 12½ and at least 2 point barbs.

860.02 B Woven Wire **PAGE 501** **10/01/15**

Replace Section 860.02 B with the following:

Provide woven wire that meets the requirement of AASHTO M 279, Design Number 939-6-12½.

862.04 C 3-Cable **PAGE 505** **10/01/15**

Replace the Section 862.04 C with the following:

C. 3-Cable.
Provide round treated timber posts used for three-cable guardrail that are between 4.5 and 6.5 inches in diameter.

880.02 B.2 Epoxy Resin Material **PAGE 509** **10/01/15**

Replace Section 880.02 B.2 with the following:

2. Color.
Provide material that meets the requirements of Table 880-03 and 880-04 when tested in accordance with ASTM D 2805.

Table 880-03
CIE Chromaticity limits using illuminant "C" for Yellow Epoxy

x	0.470	0.485	0.520	0.048
y	0.440	0.460	0.450	0.420

Table 880-04
Daylight Directional Reflectance (Y)

Color	Minimum Value
White	83
Yellow	50

885.01 E.1 Cast Iron **PAGE 514** **10/01/16**

Replace Section 885.01 E.1 with the following:

1. **Cast Iron**.
   Provide cast iron panels with a minimum thickness of 0.2 inches. Use either grey cast iron that meets AASHTO M 105, Class 35 B or use ductile cast iron that meets ASTM A 536, Grade 65-45-12. Provide panels without a surface coating and allow the panels to transition to the iron's natural patina.

894.03 A.1 General **PAGE 517** **10/01/16**

Delete the second paragraph from Section 894.03 A.1:

894.05 A General **PAGE 522** **10/01/16**

Replace Section 894.05 A with the following:

A. General.
Galvanize all materials requiring galvanization according to Section 854, "Galvanizing" after fabrication.

Submit work drawings for all structures for overhead signs according to Sections 105.08 A.3, "Additional Section 600 Work Drawing Submittal Requirements".

1. Welding.

a. General.
Perform all steel welding according to the specifications for welding of steel structures in the AASHTO Standard Specifications for Structural Supports for Highway Signs, Luminaires, and Traffic Signals.

b. Treatment of Welded Areas.
Punch a minimum 3/4 inch hole into chords to facilitate galvanizing the struts and diagonal tubes. Provide two 1/2 inch holes at the top and bottom of the chords on the capped end to facilitate galvanizing. Provide on the end tower vertical columns two 1/4 inch holes in the base plate and two 3/4 inch holes at the top of each column to facilitate galvanizing.

c. Repair Galvanization.
Repair damaged galvanized according to Section 854, "Galvanizing".

894.05 B.2 Round-Tapered or Octagonal-Tapered Tubes **PAGE 523** **10/1/16**

Replace the second paragraph of 894.05 B.2 with the following

Retain major dimensions, such as truss cross section and length, and end towers vertical dimensions. If this option is chosen, furnish to the Engineer all necessary calculations and drawings used in designing these structures. Design the structures according to the latest issue of the AASHTO Standard Specifications for Structural Supports for Highway Signs, Luminaires, and Traffic Signals. Use a wind velocity of 90 mph to compute the wind pressures on the signs and structures.

895.05 A General **PAGE 528** **10/01/16**

Replace Section 895.05 A with the following:

A. General.

Design lighting poles to meet the requirements of AASHTO Standard Specifications for Structural Supports for Highway Signs, Luminaires, and Traffic Signals.

When a breakaway base is required, provide a manufacturer certification that the light standard base meets the AASHTO requirements for both breakaway and structural adequacy.

Use a wind velocity of 90 mph with the following height and exposure correction factor:

- If the traffic signal is less than 33 feet use a K_z^a of 1.00; or
- If the traffic signal is greater than 33 feet use the K_z^a found in Table 3.8.4-1 "Height and Exposure Factors, K_z^a".

Apply different wind pressures to the structure at different heights rather than using an average wind pressure for the entire height of the structure.

Design each structural component on light standards 55 feet or greater for fatigue using the requirements of Table 11.6-2, "Fatigue Importance Categories for HMLT's".

Furnish all the necessary calculations and drawings used in the design of poles with the shop drawing submittal. A Professional Engineer duly registered in the State of North Dakota must sign, seal, and date the calculations and work drawings used in the design of lighting standards.

896.05 A GENERAL **Page 549** **10/01/16**

Replace Section 896.05 A with the following:

A. Design.

Design traffic signal standards to meet the requirements of AASHTO Standard Specifications for Structural Supports for Highway Signs, Luminaires, and Traffic Signals.

Use a wind velocity of 90 mph with the following height and exposure correction factor:

- If the traffic signal is less than 33 feet use a K_z^a of 1.00; or
- If the traffic signal is greater than 33 feet use the K_z^a found in Table 3.8.4-1 "Height and Exposure Factors, K_z^a".

Apply different wind pressures to the structure at different heights rather than using an average wind pressure for the entire height of the structure.

Design each structure component using the requirements of Table 11.6-1, "Fatigue Importance Factors, I_F."

Design the components for the total deflection, with galloping, at the free end of the traffic signal arm is limited to less than 8 Inches.

Furnish all the necessary calculations and drawings used in the design of poles with the shop drawing submittal. A Professional Engineer duly registered in the State of North Dakota must sign, seal, and date the calculations and work drawings used in the design of lighting standards.

Replace the 3 with the following:

3. Provide a metal weatherproof cover that blocks air flow in cold weather, and adequately covers the fan vent assembly and the louver on the door. Install a gasket to the cover and attach the cover to the inside of the cabinet. Construct the cover of the same material as the cabinet.

   Provide a weep hole in the bottom loop on each end of the cabinet full-size door.

   Build the cabinet to contain the following items:

   - All items of control equipment specified in these Specifications.

   - Provide a thermostatically-controlled minimum 250 watt strip-type heater mounted on the full-size door cover with a protective wire-mesh shield installed around the heater. Use a heavy-duty thermostat capable of being set within a temperature range of 30°F to 90°F. Activate the power to the fan and to the heater using a three-position toggle switch located on the auxiliary switch panel.

     Use a switch that operates vertically up and down with the:

     - Up position being FAN (power to the fan on and power to the heater off);
     - Center position being OFF (power to both the fan and the heater off); and
     - Down position being HEATER (power to the heater on and power to the fan off).

     Provide an electrical three-prong twist lock-type plug between the switch and the heater. Mount the heater thermostat on the auxiliary switch panel. Make the connection to the heater with stranded copper wire having 200°C insulation and noninsulated, solderless terminals.

   - Provide three duplex receptacles with ground fault interrupter. Fuse the receptacles ahead of the main circuit breaker.

   - Provide a switched lamp socket, fuse the lamp socket ahead of the main circuit breaker.

   - Include the following in the maintenance switches inside the cabinet:

     - Stop time control.
     - Timer power.
     - Flash.
     - Vehicle detector input for each phase in use and all future phases.
     - Pedestrian input for each phase in use and all future phases.

10/1/2014

NORTH DAKOTA DEPARTMENT OF TRANSPORTATION
PRICE SCHEDULE FOR MISCELLANEOUS ITEMS (PS-1)

The Contractor agrees to accept the following unit prices for each listed item of work and or material when no project contract unit price exists for that item. Each price listed will be full compensation for the cost of labor, material and equipment necessary to provide the item of work and/or material, complete in place, including (but not limited to) royalty, disposal of unsuitable material, equipment rental, sales tax, use tax, overhead, profit, and incidentals.

Each listed item is referenced to the Standard Specifications by Section number and Section name.

SECTION NO.	SECTION NAME	ITEM NAME	PRICE PER ITEM
107.08	Haul Roads	Water	$27 per M Gal
107.08	Haul Roads	Bitumen for Mix	Invoice Price [1] + 10%
107.08	Haul Roads	Bituminous Mix	$42 per Ton [2]
107.08	Haul Roads	Aggregate Base	$17 per Ton [2]
203.01 B	Rock Excavation	Rock Excavation	$11 per CY
203.01 C	Shale Excavation	Shale Excavation	Common Excavation Price + $1.00 per CY
203.01 D	Muck Excavation	Muck Excavation	$9 per CY
203.05 H.3	Embankment	Overhaul	$1.40 per CY - Mile
260	Silt Fence	Mucking Silt Fence	$3.90 per LF
260	Silt Fence	Removal of Silt Fence [3]	$4.25 per LF
261	Fiber Rolls	Mucking of Fiber Rolls	$3.90 per LF
261	Fiber Rolls	Removal of Fiber Rolls [3]	$4.25 per LF
420.04 E	Bituminous Seal Coat	Blotter Sand	$27 per Ton [2]
430.04 G	Hot Mix Asphalt (Exc. Material Hauled to Disposal Area)	Bituminous Mixture	Machine Placed: Bid or Invoice Price + $31 per ton Hand Placed: Bid or Invoice Price + $48 per Ton
704	Temporary Traffic Control	Flagging	$32 per MHR

[1] Price paid for bituminous material will be invoice price plus freight costs.

[2] Price Includes haul up to 10 miles. Payment for haul exceeding 10 miles will be according to Section 109.03 E, “Force Account.” The haul distance for aggregate base and bituminous mix will be based on the average haul. The haul distance for blotter sand will be from the point where the haul begins to the point where it enters the project.

[3] This is only for pre-existing items that were not installed under the Contract.

NORTH DAKOTA DEPARTMENT OF TRANSPORTATION SPECIAL PROVISION: DISADVANTAGED BUSINESS ENTERPRISE (DBE) PROGRAM

PROJECTS SU-3-982(031)035 (PCN-21609), NHU-3-019(044)155 (PCN-17505), and NHU-3-020(074)103 (PCN-17504)

RACE/GENDER CONSCIOUS GOAL The DBE goal for this project is: **10.00%**

NDDOT Contact Information	
Civil Rights Division 3rd Floor – Transportation Building	General inquiries: 701-328-2637 - or - civilrights@nd.gov
Submit advertisements at: https://apps.nd.gov/dot/cr/csi/login.htm	Denise G. Spanjer, DBE Program Administrator 701-328-3116 - or - dgspanjer@nd.gov
Submit quotes to: subquotes@nd.gov or Fax: 701-328-0343	Ramona Bernard, Civil Rights Division Director 701-328-2576 - or - rbernard@nd.gov
DBE Directory https://dotnd.diversitycompliance.com/	All times are stated in Central Time. "Days" refers to calendar days, unless otherwise stated.

PURPOSE

These provisions:

1. Provide an explanation of the federal law and information regarding compliance with the DBE requirements applicable to this contract,
2. Explain the process NDDOT will follow to evaluate bidders' efforts to obtain DBE participation
3. Provide the standards NDDOT will use to measure compliance with the requirements
4. Identify sanctions

FEDERAL AUTHORITY

The following paragraph must be included in all subcontracts of all tiers in accordance with 49 CFR § 26.13(b):

> "The contactor or all tiers of subcontractors shall not discriminate on the basis of race, color, sex, sexual orientation, gender identity, national origin, age, or disability in the performance of this contract. The contractor shall carry out applicable requirements of 49 CFR § 26.13 in the award and administration of DOT-assisted contracts. Failure by the contractor to carry out these requirements is a material breach of this contract, which may result in the termination of this contract or such other remedy as NDDOT deems appropriate which may include, but is not limited to:
>
> (1) Withholding monthly progress payments;
> (2) Assessing sanctions;
> (3) Liquidated damages; and/or
> (4) Disqualifying the contractor from future bidding as non-responsible"

It is the prime contractors' responsibility to ensure all tiers of subcontractors, brokers, manufacturers, suppliers, vendors, and regular dealers comply with the requirements of this special provision. In addition, the prime contractor has the responsibility to monitor DBE performance on the project, and to ensure that the DBE performs a commercially useful function (CUF).

INDEX

NDDOT Contact Information 1
Purpose 1
Federal Authority..... 1
Bidder/Large Subcontractor Requirements 2
I. Advertise 2
II. Sign-In 2
III. Receive & Evaluate Quotes..... 3
IV. Submit Quotes to NDDOT 4
IV. Submit Required Documents..... 4
ALB Pre-Award Requirements 4
Goal Met 5
Goal Not Met..... 5
Evaluation of Good Faith Efforts (GFE)..... 5
Administrative Reconsideration..... 6
Post-Award Requirements 7
Monitoring, Responsibilities, Reporting 7
GFE Responsibilities…… 7
Exception for Replacements..... 8
Termination for Cause..... 8
Unfulfilled Obligations..... 9
Non-Compliance - Sanctions..... 10
NDDOT Monitoring & Enforcement 10
Commercially Useful Function (CUF) 11
Counting DBE Participation..... 11
Definitions 13
SFN 52750 – Form A - Sample 16
SFN 52013 – Form B - Sample 18
SFN 52160 – Form C - Sample..... 19
SFN 60829 – Contractor GFE Documentation . 20

REQUIREMENTS

- ☐ **I, II, III, V - REQUIRED - ALL BIDDERS**
- ☐ **I, II, III, IV, V - REQUIRED - ALL SUBCONTRACTORS OVER $500,000**
- ☐ **III, IV - REQUIRED - ALL PROVIDING QUOTES OVER/UNDER $500,000**
- ☐ **I, II - WAIVED IF THE BIDDER MEETS THE PROJECT DBE GOAL**

Contract award will be made to the lowest responsible bidder whose proposal substantially complies with the requirements prescribed herein and who has met the goal for DBE participation, or has demonstrated, to the satisfaction of the Department, adequate good faith efforts to do so.

I. ADVERTISE

All bidders and subcontractors over $500,000 must advertise using one of the following two options:

OPTION 1: Place an advertisement soliciting DBE participation using the electronic **DBE Advertisement System**.

- Submit the required information online at https://apps.nd.gov/dot/cr/csi/login.htm no later than noon, 15 calendar days before the bid opening. This system has been added to the Bid Opening Sign-In System and replaces the DBE Newsletter advertisement requirement.

OPTION 2: Directly contact by email or fax, all DBEs certified in the specific NAICS (work type) required.

- Contact with DBEs must be made no later than 5 p.m. seven days before the bid opening.
- Use the DBE Directory to determine the DBE firms certified in the work to be subcontracted.

Either method of advertisement must:

- Provide the name, email address, telephone, and fax number of the company contact who will be available to discuss and/or receive quotes.
- Offer assistance to DBEs in interpreting plans; quantities; expected overtime; project scheduling;

pit and batch plan locations, length of haul, type of road; method of measurement (seeding by the mile or acre, hauling by hour or by ton-mile) or other issues that may affect a price quote.

BidEx ads do not count as having advertised.

II. SIGN IN

All bidders and subcontractors over $500,000 must indicate their intention to bid and/or receive quotes on specific jobs by using the Department's Bid Opening Sign-In System.

To indicate their intention to quote or receive quotes, all subcontractors, brokers, manufacturers, suppliers, vendors, and regular dealers are strongly encouraged to use the Bid Opening Sign-In System. When signing in subcontractors should select the type of work, i.e., grading, trucking, or other work they wish to perform.

The **Bid Opening Sign-In** web application is located at https://apps.nd.gov/dot/cr/csi/login.htm.

- Sign-In opens at 8 a.m. seven days prior to the bid opening and closes at 11 a.m. the day before the bid opening.
- Fill in the online form as required.
  - Name of company, contact person, address, email, telephone, and/or fax number
  - Company contact who will be available to receive and discuss quotes/proposals
  - Preferred method of contact - email, telephone, and/or fax number
  - Job number(s)
- The "**Bid Opening Contact Report**" is available for download at any time during the Bid Opening Sign-In period.
- Log in to download the **"Bid Opening Contact Report"** at https://apps.nd.gov/dot/cr/csi/public/listBidOpenings.htm

III. RECEIVE & EVALUATE ALL QUOTES GIVEN

All bidders and all subcontractors over $500,000 must receive and evaluate all quotes offered, whether the quotes are calculated by ton-mile, hour, acre or square mile, and whether work elements are intended to be subcontracted. It is the responsibility of any person receiving quotes to convert the quotes to an acceptable format.

All subcontractors quoting over $500,000 must attach a completed copy of Form A to their quote when submitting it to the bidder.

All quotes given for each job should be faxed or emailed to bidders or subcontractors the day before the bid opening by the times listed below. Subcontractors interested in work on the advertised jobs are encouraged to quote all contractors on the Sign-In report.

DBE AND NON-DBE	PROVIDE QUOTES BY
Suppliers (brokers/regular dealers), vendors, & manufacturers	2 p.m. Central
Subcontractors **under** $500,000	5 p.m. Central
Subcontractors **over** $500,000	8 p.m. Central

NECESSARY QUOTE INFORMATION

SFN 60211, Price Quotation, contains all pertinent information fields required for communicating clear and accurate quotes on NDDOT projects. SFN 60211 may be accessed at Department's website http://www.dot.nd.gov/forms/sfn60211.pdf

SFN 60211 is not required; however, if this form is not used, include all of the information listed on the form to assure clear and accurate quotes.

IV. SUBMIT QUOTES TO NDDOT

All subcontractors, suppliers, manufacturers, regular dealers, vendors, and brokers must fax or email quotes to the Department the day before the bid opening. Quotes received at or before 8 p.m. **may be used** in a bid differential between a DBE and non-DBE. Quotes submitted after 8 p.m. **may not be considered in the bid differential analysis.**

V. SUBMIT BY 4 P.M. 7 CALENDAR DAYS AFTER THE BID OPENING

SFN 52750 – FORM A

All bidders and subcontractors over $500,000 must submit Form A as part of the electronic bid proposal and address all DBE quotes received. A revised Form A (SFN 52750) must be submitted before the deadline if any of the following conditions are present.
http://www.dot.nd.gov/forms/sfn52750.pdf

- Additional DBE Participation is achieved after the time of bid,
- Electronic Form A was incorrectly completed, or
- By request of the Department.

The bidder must also include Form A information for all subcontractors over $500,000. Bidders are strongly encouraged to account for any intended use of DBEs by their subcontractors in order to more accurately reflect their goal achievement.

SFN 52013 – FORM B OR QUOTE COPIES

All bidders and subcontractors over $500,000 must submit one of the following:

- Copies of all quotes from all tiers of subcontracting or,
- SFN 52013, Form B - List of Businesses Submitting Quotes with a list of all businesses that submitted quotes from all tiers of subcontracting. When submitting Form B, copies of all quotes must be retained, by each bidder, until the job is awarded.

Regardless of whether submitting quotes or Form B, bidders must indicate which subcontractor(s), suppliers, regular dealers, vendors, manufacturers, or brokers will be used on the job.

APPARENT LOW BIDDER - PRE-AWARD REQUIREMENTS

To be awarded this contract, the apparent low bidder (ALB) must either:

1. Meet the DBE Goal on the project within 7 calendar days of the bid opening
2. Demonstrate adequate Good Faith Efforts (GFE) (see SFN 60829)

The project may be awarded only after the ALB submits all documentation to the Department by 4 p.m. seven (7) calendar days after the Bid Opening (as required by 49 CFR § 26.53(b)(3)(i)(B)). The earlier the documentation is submitted, the greater the possibility of having an early award.

WHEN THE PROJECT DBE GOAL IS MET:

The ALB must submit SFN 52160, Form C **-** Notification of Intent to Use, **in addition to the previously submitted** Form A or SFN 52750, and quote copies or SFN 52013 Form B - List of Businesses Submitting Quotes.

WHEN THE DBE GOAL IS NOT MET:

The ALB has seven (7) calendar days to meet the project goal if it has not been met at the time of the bid opening.

If the project goal is not met within 7 calendar days of the bid opening, the bidder must have advertised, signed in, and shown good faith efforts to achieve the goal.

In addition to the previously submitted Form A or SFN 52750 and quote copies or SFN 52013 Form B - List of Businesses Submitting Quotes, the bidder must also submit the following:

- SFN 52160, Form C Notification of Intent to Use
- SFN 60829, Contractor Good Faith Efforts Documentation (SFN 60829 is located at the end of this Special Provision)

Contractor Good Faith Efforts Documentation http://www.dot.nd.gov/forms/sfn60829.pdf provides the basis of the ALB's written account of its efforts in good faith which were employed to achieve the goal.

SFN 60829 lists the documentation necessary to demonstrate the ALB's good faith efforts to achieve the goal. The ALB must specifically demonstrate through SFN 60829 that it took all necessary and reasonable actions to achieve a DBE goal. The Department's evaluation of the efforts will be based on the ALB's submitted documentation. *Failure to meet the goal may cause the DBE Participation Committee to recommend "Not Award".*

The ability or desire of a prime contractor to perform the work of a contract with its own organization does not relieve the bidder of the responsibility to make good faith efforts. (Appendix A to 49 CFR § 26 IV D (2))

If the ALB indicates that it intends to self-perform and/or use a non-DBE to perform work quoted by a DBE, a written comparison between the DBE's quote and the prime's and/or non-DBE's cost of performing the specific spec/code item must accompany SFN 60829. The ALB also must fully detail the methodology applied in calculating the cost of their self-performed work items.

It is not acceptable to limit the use of DBEs because a larger amount of work is intended to be subcontracted to a Non-DBE.

EVALUATION OF GOOD FAITH EFFORTS

Proposals may be considered irregular and may be rejected by the Department if there is a substantial and material non-compliance with the DBE requirements. The Department reserves the right to waive minor irregularities and/or certain elements of this special provision.

Federal regulations require the Department to scrutinize a bidder's documented good faith efforts. When the ALB fails to meet the contract goal, but others meet it, it is reasonable to question whether the ALB made good faith efforts to meet the goal. (Appendix A to 49 CFR § 26 V.)

> If the ALB fails to achieve the project goal and fails to submit adequate GFE documentation by the deadline, the DBE Participation Review Committee (Committee) will notify the Director's designee that the bidder failed to demonstrate GFE. The Department may reject the proposal.

If the ALB fails to submit good faith efforts (GFE) on a project in question, the Department may reject the proposal.

If the ALB has not met the project goal and provides the required documentation, the Committee will evaluate the ALB's GFE and DBE participation. The Committee will notify the Director's designee(s) of its determination.

1. **Award:** If the Committee determines the ALB has adequately demonstrated GFE, the committee will recommend "Award".
2. **Award Subject To Using DBE:** If the committee determines the ALB has not adequately demonstrated GFE by selecting a non-DBE used in a Bid Differential (non-DBE/BD), the committee may recommend "Award Subject To" using the DBE(s).

   The Director's designee(s) will consider whether the DBE quote not used due to bid differential was reasonable and whether the ALB should have in good faith used the DBE quote. If the DBE quote is determined to be reasonable, the Director's designee(s) will provide the ALB an opportunity to increase participation by using the DBE or a DBE performing another type of work.

   If the Department determines that a non-DBE's quote is reasonable, the non-DBE/BD may be used.

   If the ALB commits to additional participation, an updated/corrected Form A and a completed Form C with the DBE must be submitted prior to award. Faxed or photocopied signatures are acceptable. The ALB is responsible for all additional costs incurred.

   If the ALB does not commit to additional participation, administrative reconsideration is available.
3. **Not Award:** If the Committee determines the ALB has not adequately demonstrated GFE, the committee may recommend "Not Award".

   Upon notification of a recommendation for a Not Award determination, the Director's designee(s) will consider the Committee's recommendation. If the Designee(s) agrees with the Committee's recommendation, the Designee(s) will contact the ALB to inform them of the determination, the reasons for it, and that administrative reconsideration is available.

Administrative Reconsideration 49 CFR § 26.53 (d)

- The ALB has two calendar days to respond with documentation or argument(s) concerning whether its good faith efforts to meet the goal were adequate.
  - An in-person reconsideration meeting is available at the ALB's request.
- The Director's designee(s) will consider any information submitted.
- The NDDOT reconsideration decision will be made by the Director's designee(s), who will not have taken part in the original determination.
  - If the Director's designee(s) determines the ALB made adequate good faith efforts to meet the goal, the job will be recommended for award.
  - If the Director's designee(s) determines that the ALB has failed to sway the decision from "Not Award", the ALB will receive written notice of the decision.
- The Director will make the final decision and may exercise such discretion as deemed appropriate.
- The result of the reconsideration process is not administratively appealable to the US Department of Transportation.

POST-AWARD REQUIREMENTS

PRIME CONTRACTOR'S MONITORING, RESPONSIBILITIES, REPORTING

For the life of the project, the prime contractor is responsible for the DBEs listed on Form C and for the specific spec/code items or products that the prime committed to during the award process.

The prime is responsible to:

- Invite and encourage all subcontractors and all DBEs listed on Form C to the pre-construction conference.
- Provide minutes to any DBE not in attendance at the pre-construction conference.
- Ensure their company as well as any subcontractors, manufacturers, and regular dealers/suppliers comply with the requirements of this special provision.
- Provide all subcontractors with Proposed Project Schedules and any necessary updates.
- Monitor DBE performance on the project.
    - Submit SFN 60597, DBE Performance – Commercially Useful Function (CUF) Certification to the project engineer with SFN 5682, Prime Contractor's Request to Sublet. Project engineers will not approve Requests to Sublet without the CUF Certification.
    - Submit SFN 60638, Monthly Record of DBE Project Payments for each DBE on the project, by the 15th calendar day of every month while payments are made to the DBE.
- Maintain project records and documentation of payments to DBEs for three years following acceptance of the final payment from NDDOT (per FHWA-1273, Section II Nondiscrimination #11).
    - Submit SFN 14268, DBE Participation Certification for each DBE, to the project engineer within 4 weeks of the DBE contract work completion. Each certification must be signed by the prime contractor and DBE used on the project.
        - This reporting requirement also applies to any certified DBE.
        - NDDOT may perform interim audits of contract payments to DBEs to ensure that the actual amount paid to DBEs equals or exceeds the dollar amount stated on Form C.
        - Make these records available for inspection, upon request, by an authorized representative of the NDDOT or USDOT.

If SFN 60597, SFN 60638, and/or SFN 14268 are not received in a timely manner, progress payments will be withheld until submitted.

GFE RESPONSIBILITIES FOR THE LIFE OF THE CONTRACT

If award of the contract is made based on the contractor's good faith efforts, the goal will not be waived; the contractor must make good faith efforts throughout the duration of the project.

The prime contractor shall not terminate or replace a DBE subcontractor without the Department's prior written consent. 49 CFR 26.53(f)(1)i.

The Department's contract includes a provision stating:

> (A) That the contractor shall utilize the specific DBEs listed to perform the work and/or supply the materials unless the contractor obtains written consent; and
> (B) That, unless the Department's consent is provided, the contractor shall not be entitled to any payment for work or material unless it is performed or supplied by the listed DBE.

SFN 60595 - Replacement Approval Request must be submitted and approved prior to replacement of each DBE firm(s), or Non-DBE/BD(s), or any work the prime originally intended to self-perform prior to the

commencement of any replacement work. No payment will be made if work commences without written approval. The form may be accessed at the Department's website:
http://www.dot.nd.gov/forms/sfn60595.pdf

If the prime has not achieved the goal and additional work becomes available, the prime must follow the replacement approval request process using SFN 60595.

EXCEPTION FOR REPLACEMENTS DUE TO PUBLIC NECESSITY

When replacement work is required as a matter of public necessity, (e.g., safety, storm water issues), the contractor must immediately notify the project engineer and the DBE or Non-DBE/BD intended at the time of award. If the DBE or Non-DBE/BD is unable to perform the work within the time specified by permit or administrative rule, the DBE or Non-DBE/BD must notify the prime immediately; and, within one business day, a written explanation must be submitted to the prime with a copy to the project engineer. The project engineer refers all replacement approval requests to the Assistant District Engineer (ADE). In a case of public necessity, the ADE has the authority to allow the contractor to self-perform the replacement work or to find another contractor to complete it.

TERMINATION FOR CAUSE

A DBE or Non-DBE/BD may not be terminated without the Department's prior written consent. (49 CFR 26.53(f)(1)(i))

The Department will provide such written consent if the Department agrees that the contractor or subcontractor has good cause to terminate the DBE firm or Non-DBE/BD.

Circumstances which may be considered good cause for termination include when the listed DBE or Non-DBE/BD:

- Fails or refuses to execute a written contract
- Fails or refuses to perform the work of its subcontract in a way consistent with the contract and/or with normal industry standards, provided, that good cause does not exist if the failure or refusal of the listed DBE or Non-DBE/BD to perform its work on the subcontract results from the bad faith or discriminatory action of the prime or subcontractor
- Fails or refuses to meet the prime contractor's reasonable nondiscriminatory bond requirements
- Becomes bankrupt, insolvent, or exhibits credit unworthiness
- Is ineligible to work on public works projects because of suspension and debarment proceedings pursuant 2 CFR Parts 180, 215, and 1,200 or applicable state law
- Is ineligible to receive DBE credit for the type of work required
- Dies or becomes disabled with the result that the listed DBE or Non-DBE/BD is unable to complete its work on the contract
- Other documented good cause that the Department determines compels the termination of the listed DBE or Non-DBE/BD

Good cause does not exist if the prime contractor or subcontractor seeks to terminate a DBE or Non-DBE/BD which was relied upon to obtain the contract so that the contractor can self-perform the work for which the DBE or Non-DBE/BD was engaged or so that the contractor can substitute another DBE or Non-DBE contractor after contract award.

The contractor must immediately give written termination notice to DBE or the Non-DBE/BD. At the same time, SFN 60595 and its supporting documentation must be provided to the project engineer for review and analysis of the reasons for the intended termination.

The contractor must give the DBE or Non-DBE/BD five calendar days to respond to the termination notice. Within that time, the DBE or Non-DBE/BD should respond with a written explanation of their reasons

and/or objections to the proposed termination and specifically address why the Department should deny the contractor's request. This explanation should be submitted in reply to the contractor with a copy to the project engineer.

The project engineer will send the contractor's SFN 60595, the DBE or Non-DBE/BD's written response(s) and any other accompanying documentation to the Civil Rights Division (CRD). If the CRD concurs that a termination is warranted, the contractor must seek a DBE to perform the work.

All DBEs currently certified in the specific area of work to be performed, must be contacted in writing or by phone, and quotes solicited. If available, a DBE will be selected to perform a dollar value of work, equal to the value of the commitment not achieved, unless the contractor can demonstrate the DBE quote is unreasonable, using the same comparison in section "Good Faith Efforts Documentation."

Upon receipt of appropriate written GFE documentation, and prior to commencement of any replacement work, CRD will consider the contractor's efforts and provide a final written decision to the project engineer.

In instances where trucking replacements are sought, DBEs and/or Non-DBEs as allowed by regulation must be selected to cover all the trucking required until sufficient participation is met.

UNFULFILLED OBLIGATIONS

The Department requires SFN 60595 and its supporting documentation when a contractor, DBE, or Non-DBE/BD does not fulfill her or his obligations in any of the following situations:

- The prime contractor is unable to perform the full amount of work committed to be completed, by the prime's workforce and equipment, at the time of award, or
- The Non-DBE/BD to which the prime contractor committed using at the time of award, is unable to perform the full amount of work, or
- The DBE or Non-DBE/BD withdraws voluntarily from the project and provides to the prime written notice of its withdrawal.

SFN 60595 and its supporting documentation must be provided to the project engineer for review and analysis. If the DBE or Non-DBE/BD is not able to perform, the prime contractor must provide written documentation from the DBE or Non-DBE/BD as to the reasons. The project engineer refers all replacement approval requests to the ADE. The Civil Rights Division will provide a written final determination to the project engineer.

If the Department concurs that a substitution is warranted, the prime contractor will seek a DBE to perform the work. All DBEs currently certified in the specific area of work to be performed, must be contacted in writing or by phone, and quotes solicited. If available, a DBE will be selected to perform a dollar value of work, equal to the value of the commitment not achieved, unless the contractor can demonstrate the DBE quote is unreasonable, using the same bid differential comparison in section "Good Faith Efforts Documentation."

In instances where trucking replacements are sought, DBEs and/or Non-DBEs as allowed by regulation must be selected to cover all the trucking required until sufficient participation is met.

The prime contractor is responsible for any additional costs incurred as a result of the prime contractor's failure or the subcontractor quoting over $500,000 to fulfill the original commitment or the DBE or Non-DBE/BD's failure to perform.

NON-COMPLIANCE, FAILURE TO PERFORM, AND SANCTIONS

If the Department determines that a contractor should be sanctioned, the Department will provide written notice to the contractor informing them of the sanction for the following:

- Not submitting required documentation in a timely manner
- Not paying a DBE in a timely manner
- Not having a DBE perform the specified dollar amount of work (subject to plan quantity changes) tasks or bid items
- For otherwise not fulfilling the requirements of this DBE special provision

If the Department determines that a DBE should be sanctioned, the Department will provide written notice to the DBE informing them of the sanction for the following:

- Failure to perform work as specified in the contract
- Failure to pay contract-related bills in a timely manner
- Failure to perform a commercially useful function
- Failure to notify the prime contractor orally and in writing if they are unable to perform a commercially useful function
- Otherwise not fulfilling the requirements of this DBE special provision

Other grounds for sanctions may include, but are not limited to: repeated instances of failure to perform the contract requirements, repeated instances of late contract-related payments, or documented fraudulent practices.

If sanctions are applied, the contractor or the DBE may make a written request to the Department for reconsideration. The contractor or the DBE must provide a written statement defending their actions within 3 calendar days.

If the Department does not receive a written request for reconsideration, or if the contractor or DBE does not provide sufficient evidence that the provisions have been met, the Department may suspend the contractor or the DBE bidding or quoting privileges and not allow the contractor or the DBE to participate in one or more scheduled bid openings after the date the sanction is imposed.

Further sanctions which may be imposed by the Department for failure on the part of the contractor may include, but are not limited to:

- Withhold the contractor's progress payment until the contractor complies with all DBE contract provisions
- Deduct, from the contractor's progress payments, the dollar amount of DBE participation committed to but not achieved by the contractor
- Find the contractor in default
- Liquidated damages
- Disqualifying the contractor from future bidding
- Take other corrective action determined by the Department to be appropriate
- Any combination of the above.

NDDOT MONITORING AND ENFORCEMENT MECHANISMS

The Department will bring any false, fraudulent, or dishonest conduct in connection with the DBE program to the attention of USDOT. USDOT may pursue action as provided in 49 CFR § 26.107. Actions include referral to the Department of Justice for criminal prosecution or referral to the USDOT Office of Inspector General for action under suspension and debarment, or Program Fraud and Civil Remedies rules. The Department will also consider similar action under its own legal authority, including responsibility determination in future contracts.

COMMERCIALLY USEFUL FUNCTION

DBEs are required to perform a commercially useful function (CUF). CUF refers to those services the DBE is certified to perform. Certified services for each DBE are listed in the online DBE Directory. It is a DBE's responsibility to immediately notify the prime contractor in writing if the DBE is unable to perform a CUF or the services indicated on Form C.

The contractor must certify that DBEs working on the prime's contract are performing a commercially useful function. Submit SFN 60597, DBE Performance – Commercially Useful Function Certification to the project engineer with SFN 5682, Prime Contractor's Request to Sublet. Project engineers will not approve the Requests to Sublet without the CUF Certification. A review of the certification must be performed by the project engineer to determine whether the contract dollar value of the DBE's work may be counted toward the project goal.

The Department counts participation to a DBE contractor toward DBE goals only if the DBE is performing a CUF on that contract.

A. A DBE performs a CUF when it is responsible for execution of the work of the contract and is carrying out its responsibilities by actually performing, managing, and supervising the work involved. To perform a CUF, the DBE must also be responsible, with respect to materials and supplies used on the contract, for negotiating price, determining quality and quantity, ordering the material, installation and paying for the material itself. 49 CFR § 26.55(c)(1)

B. A DBE does not perform a CUF if its role is limited to that of an extra participant in a transaction, contract, or project through which funds are passed in order to obtain the appearance of DBE participation. 49 CFR § 26.55(c)(2)

C. If a DBE does not perform or exercise responsibility for at least 30 percent of the total cost of its contract with its own work force, the Department must presume that it is not performing a CUF. 49 CFR § 26.55(c)(3)

D. When a DBE is presumed not to be performing a CUF as provided in paragraph C (above), the DBE may present evidence to rebut this presumption. 49 CFR § 26.55(c)(4)

E. The Department's decisions on CUF matters are subject to review by Federal Highway Administration, but are not administratively appealable to USDOT. 49 CFR § 26.55(c)(5)

COUNTING RACE/GENDER CONSCIOUS DBE PARTICIPATION - 49 CFR § 26.55

The Department does not count the participation of a DBE subcontractor toward a contractor's final compliance with its DBE obligations on a contract until the amount being counted has actually been paid to the DBE. 49 CFR § 26.55 (h)

The Department will count DBE participation toward our overall annual goal as provided in 49 CFR § 26.55 as noted below.

1. The Department will use the following factors in counting DBE trucking participation.

   A. For purposes of this section, a lease must indicate that the DBE has exclusive use of and control over the truck. This does not preclude the leased truck from working for others during the term of the lease with the consent of the DBE, so long as the lease gives the DBE absolute priority for use of the leased truck. Leased trucks must display the name and identification number of the DBE. 49 § 26.55(d)(7)

   B. The DBE must be responsible for the management and supervision of the entire trucking operation for which it is responsible on a particular contract. 49 CFR § 26.55(d)(1)

   C. The DBE must itself own and operate at least one fully licensed, insured, and operational truck used on the contract and receives credit for the total value of the transportation services it provides on the contract using trucks it owns, insures, and operates using drivers it

employs. 49 CFR § 26.55(d)(2-3)

D. The DBE may lease trucks and drivers from another DBE firm and receives credit for the total value of the transportation services the lessee DBE provides. 49 CFR § 26.55(d)(4)

E. The DBE may also lease trucks with drivers and is entitled to credit for the total value of transportation services provided by non-DBE leased trucks equipped with drivers not to exceed the services under items 1C and 1D. Additional participation by non-DBE owned trucks equipped with drivers receives credit only for the fee or commission it receives as a result of the lease arrangement. 49 CFR § 26.55(d)(5)

Example to 1D: DBE Firm X uses two of its own trucks on a contract. It leases two trucks with drivers from DBE Firm Y and six trucks **with drivers** from non-DBE Firm Z. DBE credit would be awarded for the total value of transportation services provided by Firm X and Firm Y, and may also be awarded for the total value of transportation services provided by four of the six trucks provided by Firm Z. In all, full credit would be allowed for the participation of eight trucks. DBE credit could be awarded only for the fees or commissions pertaining to the remaining trucks Firm X receives as a result of the lease with Firm Z.

F. The DBE may lease trucks without drivers from a non-DBE truck leasing company and if the DBE uses its own employees as drivers, it is entitled to credit for the total value of these hauling services.

Example to paragraph 1F: DBE Firm X uses two of its own trucks and drivers on a contract. It leases two additional trucks and drivers from non-DBE Firm Z. Firm X uses its own employees to drive the trucks leased from Firm Z. DBE credit would be awarded for the total value of the transportation services provided by all four trucks. 49 § 26.55(d)(6)

2. Only the value of the work actually performed by the DBE counts toward the project goal when a DBE participates in a contract provided the DBE is certified in this work.

A. The Department counts the entire amount of that portion of a construction contract, or other contract not covered by item 2. B, that is performed by the DBE's own forces. Included are the cost of supplies and materials obtained by the DBE for the work of the contract, including supplies purchased or equipment leased by the DBE (except supplies and equipment the DBE subcontractor purchases or leases from the prime contractor or its affiliate). 49 CFR § 26.55 (a)(1)

B. The Department counts the entire amount of fees or commissions charged by a DBE firm for providing a bona fide service for which they are certified, such as professional, technical, consultant, or managerial services, or for providing bonds or insurance specifically required for the performance of a USDOT-assisted contract, toward DBE goals, if the Department determines the fee to be reasonable and not excessive. 49 CFR § 26.55 (a)(2)

C. When a DBE subcontracts part of the work of its contract to another firm, the value of the subcontracted work may be counted toward DBE goals only if the DBE's subcontractor is also a DBE. 49 CFR § 26.55 (a)(3)

3. The Department counts expenditures with DBEs for materials or supplies toward DBE goals as provided in the following:

A. If the materials or supplies are obtained from a DBE manufacturer, count 100% of the cost of the materials or supplies toward DBE goals. 49 CFR § 26.55 (e)(1)(i)

B. If the materials or supplies are purchased from a DBE regular dealer, count 60 percent of the cost of the materials or supplies toward DBE goals. 49 CFR § 26.55 (e)(2)(i)

C. Packagers, brokers, manufacturers' representatives, or other persons who arrange or expedite transactions are not regular dealers within the meaning of 3B (above) 49 CFR § 26.55 (e) (2) (ii) (C)

D. With respect to materials or supplies purchased from a DBE which is neither a manufacturer nor a regular dealer, count the entire amount of fees or commissions charged for assistance in the procurement of the materials and supplies, or fees or transportation charges for the delivery of materials or supplies required on a job site, toward DBE goals, if the Department determines the fees to be reasonable and not excessive. Do not count any portion of the cost of the materials and supplies themselves toward DBE goals, however. 49 CFR § 26.55 (e) (3)

E. The Department determines the amount of credit awarded to a firm for the provisions of materials and supplies (e.g., whether a firm is acting as a regular dealer or a transaction expediter) on a contract-by-contract basis. 49 CFR § 26.55 (e)(4)

4. If a firm is not currently certified in ND at the time of the execution of the contract, the Department does not count the firm's participation toward any DBE goal. 49 CFR § 26.55 (f)

5. The Department does not count the dollar value of work performed under a contract with a firm after it has ceased to be certified toward the Department's overall annual goal. 49 CFR § 26.55 (g)

DEFINITIONS

The definitions specified below apply only to this Special Provision and may contain differences from NDDOT Standard Specifications.

Achievement means any DBE certified service dollar amount committed to at the time of award. Any achievement must be supported by a request to sublet and Monthly DBE Payment Records for each DBE.

Aggregate providers are considered subcontractors rather than regular dealers/suppliers, regardless of the amount of their quote.

Apparent low bidder (ALB) means the bidder whose bid is read as low bid at the bid opening.

Bid differential means written documentation provided by the low bidder comparing a Non-DBE quote to a DBE quote.

Bid Opening Sign-In System means the Department's online system to which all prime contractors and subcontractors must register to indicate their interest in quoting or bidding prior to each bid opening.

Bidder/prime contractor means bidders who are submitting proposals on this project, regardless of the size of the highway construction projects; a contractor intending to serve as the prime contractor.

Blanket quote means when a business provides the same quote, for all projects, at a bid opening, using the same price, at one rate, not project specific. Blanket quotes for the construction season are not allowed, i.e. trucking, striping, signing, construction supplies, etc.

Commercially Useful Function describes a DBE's responsibilities and involvement in a project, see section Commercially Useful Function of this SP.

Commitment means the dollar amount of work the DBE will complete according to the bidder's submitted proposal.

Contractor means all DBE and Non-DBE firms, including prime contractors, subcontractors (under/over $500,000), brokers, vendors, regular dealers/suppliers, and manufacturers at any tier.

DBE Goal means a percentage of the total contract targeted for the hiring of DBE subcontractors to do specific bid items for which the DBE has been certified to perform. Project goals are set by assessing the project's bid items, location, whether DBEs are available to do the work.

DBE Participation means the percentage achieved when the dollar amount committed to the DBE is divided by the dollar amount of all contract items.

DBE Participation Review summarizes the prime's participation at the time of award. A replacement approval request must be submitted to substitute a firm for any DBEs reported as being used at the time of award.

Department means the project owner regardless of whether the owner is NDDOT, a city or a county

project.

Disadvantaged business enterprise or DBE means a for-profit small business concern that is certified by the Department and listed in the DBE Directory available on the Department's web site. DBEs must first be certified in the work intended before any DBE achievement may be counted toward the project goal.

Equipment supplier is a firm which provides equipment for sale or lease, without operators, and whose primary business function is equipment sales or leasing.

Good Faith Efforts (GFE) means efforts made by the prime contractor to achieve a DBE goal. This includes but is not limited to providing assistance to DBEs in preparing their quotes, advertise, sign in, etc.

Manufacturer means a firm that operates or maintains a factory or establishment that produces, on the premises, the materials, supplies, articles, or equipment required under the contract and of the general character described by the specifications. 49 CFR § 26.55 (e) (1) (ii)

Materials means aggregate, steel, petroleum products, concrete, asphalt, and other construction supplies.

NAICS Codes means industry codes assigned by North American Industry Classification System. When certified, DBE businesses are assigned NAICS codes which are identified in the DBE Directory.

NDDOT Civil Rights Certification & Compliance System (CRCCS) refers to the online compliance reporting system whereby contractors report/submit job related payments, commitments, and Utilization Plan documentation.

Non-DBE means a contractor, subcontractor, supplier (broker or regular dealer), vendor, or manufacturer that has not been certified as a DBE by the NDDOT Uniform Certification Program.

Non-DBE used in bid differential (Non-DBE/BD) means a Non-DBE which, at the time of award, was approved for use due to a price comparison with a DBE. A Form C with the Non-DBE/BD is included in the DBE Participation Review documentation. A replacement approval request must be submitted when the Non-DBE/BD is unable to complete the work.

Positive Contact means active and documented solicitation of DBE and other subcontractors. Advertising the prime's intention to bid or contacting individual DBEs is deemed a positive contact.

Project owner means any political subdivision such as a city or county which provides match to federal highway funds and uses NDDOT's electronic bidding system to let their projects to bid. The Department "owns" state projects.

Quoter means a DBE or a Non-DBE subcontractor (under/over $500,000), brokers, vendors, regular dealers/suppliers, and manufacturers at any tier who submits quotes to another contractor.

Race/Gender Conscious (RGC) goals are those focused specifically on assisting DBEs. The RGC portion of NDDOT's 2016 overall 6.22 percent DBE goal is 2.75 percent.

Responsible Bid Proposal means a bidder's proposal in which the project goal has been achieved, or the bidder demonstrates Good Faith Efforts (GFE) as outlined in this Special Provision.

Subcontractor means any firm intending to perform work, or intending to perform work and supply the materials, which were intended for their work on the project. All subcontractors must attach a list of DBE subcontractors intended for use to their quote when submitting it to the prime contractor.

Subcontractor quoting over $500,000 means a subcontractor whose quote is over $500,000 on any project and who is not a supplier, broker, vendor, regular dealer, or manufacturer. All aggregate providers are considered subcontractors, regardless of the amount of their quote.

Supplier means a party providing goods, services, and supplies on the project.

> **Broker** means an agent who, without having custody of the property, a) negotiates contracts of purchase, work, lease, or sale; b) buys and sells goods; or c) negotiates between buyers and sellers. See Counting DBE Participation section.
>
> **Regular Dealer** means a DBE firm that owns, operates, or maintains a store, warehouse, or other establishment in which the materials supplies, articles, or equipment of the general character described by the specifications and required under the contract are bought, kept in stock, and regularly sold or leased to the public in the usual course of business. See Counting DBE

Participation section.

Tier means various levels of contractors on the job. For example a prime contractor's subcontractor (B) is referred to as the second tier. When B subcontracts with C, C becomes the third tier, etc.

Tied quote means the quote will be considered only if all of the bid items are included.

Untied quote means that any item or group of items quoted may be used for price noted on the quote whether one or all are used.

Utilization Plan is the prime's documented plan to achieve DBE participation on a given project.

Download approved form needed at: http://www.dot.nd.gov/forms/SFN52750.pdf

DISADVANTAGED BUSINESS ENTERPRISE PARTICIPATION (RGC)

North Dakota Department of Transportation, Civil Rights Division
SFN 52750 (Rev. 01-2015)

FORM A

Revision Date

Contractor		Phone
Job No.	Project No.	Bid Opening Date

NOTE: This revised Form A represents a change in the bidders original Form A which was submitted electronically at the time of bid. Nevertheless, the bidder is bound by the proposal submitted at the time of bid, under NDDOT provisions, and thus the bidders proposal, the hard copy proposal, addenda, plans, standard specifications, supplemental specifications, and special provisions are part of the bid and contract.

For the life of the project, any changes in work listed here to be self-perfo[illegible] to be [illegible]rform[illegible] by a DBE, or to be completed by a non-DBE subcontractor approved at the time of award mus[illegible] appr[illegible] writ[illegible] by the Civil Rights Division prior to commencement of any work. No payment will be made with[illegible] writte[illegible] prov[illegible]

PRINT ALL NUMBERS CLEARLY AND LEGIBLY.

LIST ALL DBE FIRMS WHO QUOTED YOUR FIRM ON THIS [illegible]JECT [illegible]EC[illegible] 1, SECTION 2, and/or SECTION 3.

Section 1.

List **DBE** firms to be used on the project.

1. List DBE Firms to be used by the bidd[illegible]ard t[illegible]rojects [illegible]al ac[illegible]ement.
2. List the DBEs to be used by subcontrac[illegible]oward [illegible]project goal.
   - Include the subcontractor's [illegible] listin[illegible] DBE[illegible] be used by the subcontractor.
3. List the spec & code item n[illegible]bers [illegible]e pe[illegible]ed by DBEs and the total dollar value of the contract.
   - Note whet[illegible]BE fi[illegible] is t[illegible] on[illegible] a portion of a spec & code item (supply, haul, place, etc.) and state the reas[illegible]) the DBE is not [illegible]ing [illegible]or the entire item.
   - State th[illegible]ame [illegible]ntra[illegible] will perform the remaining portion.
4. DBE bidde[illegible] w[illegible] be [illegible]formed with "own forces and equipment."
   - Separately list any wor[illegible] be subcontracted to DBEs and any materials to be purchased from DBEs.

DBE Firm	
List Specific Spec & Code Item Numbers or Products to be Supplied	Total Contract Dollar Value
Percent DBE will do with own equipment/forces= %	
Percent Non-DBE trucker will perform = %	If Regular Dealer, X 60% =

DBE Firm	
List Specific Spec & Code Item Numbers or Products to be Supplied	Total Contract Dollar Value
Percent DBE will do with own equipment/forces= %	
Percent Non-DBE trucker will perform = %	If Regular Dealer, X 60% =

DBE Firm	
List Specific Spec & Code Item Numbers or Products to be Supplied	Total Contract Dollar Value
Percent DBE will do with own equipment/forces= %	
Percent Non-DBE trucker will perform = %	If Regular Dealer, X 60% =

Continued

Sample

Download approved form at: http://www.dot.nd.gov/forms/SFN52013.pdf

FORM A (continued)

DBE Firm	
List Specific Spec & Code Item Numbers or Products to be Supplied	Total Contract Dollar Value
Percent DBE will do with own equipment/forces= % Percent Non-DBE trucker will perform = %	If Regular Dealer, X 60% =

DBE Firm	
List Specific Spec & Code Item Numbers or Products to be Supplied	al C[illegible]r Value
Percent DBE will do with own equipment/forces= % Percent Non-DBE trucker will perform = %	If Regular [illegible]r, X 60%

Section 2:
List DBE firms not used because the bidder will self-[illegible]rm [illegible]ocure s[illegible]fic sp[illegible]ode item numbers.

DBE Firms not used; Bidder Self-Performin[illegible]	S[illegible] & code item numbers or products to be supplied by [illegible]idder
1.	
2.	
3.	
4.	

Section 3.
List DBE firms not used due to bid differential and indicate which firm will be performing the work instead.

DBE Firms not used, bid differential	Firms to be used instead of DBE
DBE Firm	
DBE Firm	
DBE Firm	
DBE Firm	
DBE Firm	

See DBE Race/Gender Special Provision for additional information.

Email this form to Subquotes@nd.gov or Fax to (701)328-0343

Sample

Download approved form at: http://www.dot.nd.gov/forms/SFN52013.pdf

LIST OF BUSINESSES THAT SUBMITTED QUOTES (RGN & RGC)
North Dakota Department of Transportation, Civil Rights Division
SFN 52013 (Rev. 01-2016)

Page 1 of _____

FORM B
DUE BY 4 P.M. (CENTRAL) 7 CALENDAR DAYS AFTER THE BID OPENING

All bidders must submit one of the following by email to Subquotes@nd.gov or by fax to (701)328-0343.

1. Copies of all quotes received from all tiers of subcontracting on the project.
   - Prime contractors intending to use DBEs quoting to subcontractors must supply the subcontractor's Form A and Form B; and identify the subcontractors intended for use.
2. Form B, SFN 52013: List all firms that submitted quotes from all tiers of subcontracting.
   - At the same time, bidders must supply subcontractor's Form As received with subcontractor quotes and use the check box to indicate which subcontractor will be used on the job.
     When submitting Form B, copies of all DBE and non-DBE quotes must be retained until the project is awarded.

☐	Business	Contact Person	Telephone Number
	Mailing or Email Address		Spec & Code Quoted
☐	Business	Contact Person	Telephone Number
	Mailing or Email Address		Spec & Code Quoted
☐	Business	Contact Person	Telephone Number
	Mailing or Email Address		Spec & Code Quoted
☐	Business	Contact Person	Telephone Number
	Mailing or Email Address		Spec & Code Quoted
☐	Business	Contact Person	Telephone Number
	Mailing or Email Address		Spec & Code Quoted
☐	Business	Contact Person	Telephone Number
	Mailing or Email Address		Spec & Code Quoted
☐	Business	Contact Person	Telephone Number
	Mailing or Email Address		Spec & Code Quoted
☐	Business	Contact Person	Telephone Number
	Mailing or Email Address		Spec & Code Quoted
☐	Business	Contact Person	Telephone Number
	Mailing or Email Address		Spec & Code Quoted

Sample

Use additional pages, following the same format, if necessary.

Download approved form at: http://www.dot.nd.gov/forms/SFN52160.pdf

NOTIFICATION OF INTENT TO USE (RGN & RGC)

North Dakota Department of Transportation, Civil Rights
SFN 52160 (Rev. 01-2016)

FORM C - DUE BY 4 P.M. 7 WORKING DAYS AFTER THE BID OPENING

1. The apparent low bidder shall submit an individual Form C for each DBE (or approved Non-DBE) to be used on the project to subquotes@nd.gov or fax to (701)328-0343.
2. The contractor and DBE shall both sign the form. Faxed or photocopied signatures are acceptable. Form C applies to all tiers of subcontractors for DBE achievement credit to be given.
3. If Form C contains additional pages or attachments, both parties must sign each page or attachment.
4. Explain any difference between the information on Form A and Form C in the comments section below.

This form is not a contract and does not take the place of any contract. This form indicates to the NDDOT that all DBEs listed on Form A will be used on the project.

Prime Contractor or Subcontractor	Project Number
Intended DBE/ Non-DBE	Bid Opening Date

	Spec & Code #	Work Description	(DBE) Percent of w to be done with ow for	Appr Quan	Unit Costs	Amount
X						

ADD EXPENSE

Total:	$.00

Are there any agreements not d in y qu ☐ Ye ☐ No If yes, explain:

Comments: Use this space to ex any differ s between the amounts, units, work descriptions, spec/code items, quantities, and totals between those indicated on Form submitted with the bid proposal and this Form C.

Prime Contractor/Subcontractor Signature	Title	Date
Intended DBE/Non-DBE Signature	Title	Date

Sample

Download approved form at: http://www.dot.nd.gov/forms/SFN60829.pdf

CONTRACTOR GOOD FAITH EFFORTS DOCUMENTATION

North Dakota Department of Transportation, Civil Rights Division
SFN 60829 (Rev. 10-2015)

Submit this form and the required attachments to document the contractor's good faith efforts to meet the project goal. All supporting documentation and evidence of good faith efforts must be clearly labeled and submitted as specified in PART A through Part I. Submit by email to Subquotes@nd.gov or by fax at (701)328-0343 by the deadlines within 7 calendar days of the bid opening.

PART A - PRIME CONTRACTOR INFORMATION

Prime Contractor			
Address	City	State	ZIP Code
Telephone Number	FAX Number	Email Address	
Contact Person	Title		

PART B - PROJECT DESCRIPTION

Bid Opening Date	Job Number	PCN	Project Number

PART C - CONTRACTOR PARTICIPATION ACHIEVEMENT DATA

Project DBE Goal Percent	Total DBE PARTICIPATION DOLLAR[illegible] to [illegible] DBE GOAL (Total prime Bid dollar amount X [illegible] % Goa[illegible]
Contractor's DBE Participation Percent	

PART D - PROJECT SUMMARY AMOUNTS

1. Total Prime Bid	$
2. Total Dollars Committed to DBEs - incl[illegible]ers (From Part E line 13)	$ 0.00
3. Total Dollars Commit[illegible]-DBE[illegible] (From Part F line 24)	$ 0.00
4. Total DBE Suppli[illegible]ollar[illegible]ted [illegible]mitted (Total committed to DB[illegible]de a[illegible]s)	$
5. Work to be Performed by Prime (Add Part D lines 2, 3, and 4 s[illegible]act f[illegible]t D line 1)	$ 0.00
6. Percent of Work Perform[illegible]rime (Divide Part D line 5 by Part D line 1)	0.00 %
7. Total DBE Participation (Add Part D lines 2 and 4)	$ 0.00

PART E - DBE COMMITMENTS Attach additional sheet if necessary.

COMMITTED DOLLARS	DBEs WITH A COMPLETED FORM C to be used on the project	SPEC/CODES QUOTED
8. $		
9. $		
10. $		
11. $		
12. $		
13. $ 0.00	Total Dollars committed to DBEs	

Sample

SFN 60829 (10-2015)

PART F - NON-DBE COMMITMENTS Attach additional sheet if necessary.

COMMITTED DOLLARS	ALL NON-DBE SUBCONTRACTORS, TRUCKERS, MATERIALS/SUPPLIERS & OTHER SERVICES PROVIDERS to be used on the project	SPEC/CODES QUOTED
14.$		
15.$		
16.$		
17.$		
18.$		
19.$		
20.$		
21.$		
22.$		
23.$		
24.$ 0.00	Total Dollars committed to non-DBEs	

PART G - DBEs QUOTED BUT NOT SELECTED Attach additional sheet if necessary.

QUOTED DOLLARS	DBEs WHO QUOTED, BUT NOT SELECTED	SPEC/CODES QUOTED	REASON NOT SELECTED
25.$			
26.$			
27.$			
28.$			
29.$			
30.$			

PART H - REQUIRED ATTACHMENTS - SUPPORTING DOCUMENTS

Submit complete documentation to support SFN 60829 as instructed on page 3.

PART I - CERTIFICATION

Prime Contractor Signature	Title	Date Submitted

Sample

Download approved form needed at: http://www.dot.nd.gov/forms/SFN60829.pdf

SFN 60829 (10-2015)

Page 3 of 3

PART H - SUPPORTING DOCUMENTS:

1. **Use a cover letter to recount the relevant issues which your firm wants NDDOT to consider in determining whether to award.**

2. **Explain the efforts your firm made in attempting to meet the project DBE goal.**
   a. Did your firm ask subcontractor to obtain DBE participation as a lower tier subcontractor, and what was the outcome of these efforts?
   b. Did your firm use the DBE Directory located at: https://dotnd.diversitycompliance.com/ to identify DBEs certified in the work being used to meet the goal?
   c. Did your firm review the plans to determine whether DBE participation was available in other areas of work on the project?

3. **On a separate sheet, provide a copy of any solicitation email or fax used to gather additional participation after the time of bid.**
   a. Another format may be used provided all information requested is included.
   b. Include the following information (see below on a separate sheet).

DBE Firm Contacted	Person Contacted	Date & Time Contacted	Phone, Email	Specific Responses, Number of Contacts

4. **Provide written Bid Differential - Apples to Apples Comparisons- like items must be compared to like items**
   a. If a **non-DBE was selected over a DBE**, provide the quotes compared, detailed comparison between the specific spec/code items quoted by the non-DBE and the DBE and the specific reasons for your selection.
   b. If the **prime contractor intends to self-perform the work quoted by a DBE**, provide a Detailed comparison between the prime's costs for the specific spec/code items quoted by the DBE along with an explanation of the method of valuation of the prime's costs.
   c. Another format may be used provided all information requested is included.

BID DIFFERENTIAL ANALYSIS EXAMPLE

						DBE XYZ Contracting	Non-DBE ABC Construction	Prime General Construction		
Spec No.	Code No.	Description	Units	Quantity	Unit Price	DBE Quoted Price	Non-DBE Quoted Price	Self-Performed Price	Percentage Difference	Dollar Difference
202	0112	REMOVAL OF CONCRETE	SY	838						
202	0119	SAW CONCRETE	LF	54						
203	0101	COMMON EXCAVATION-TYPE A	CY	107,262						
203	0108	TOPSOIL-BORROW AREA	CY	31,269						
203	0109	TOPSOIL	CY	83,126						
					TOTALS					

Sample

NORTH DAKOTA DEPARTMENT OF TRANSPORTATION
EEO AFFIRMATIVE ACTION REQUIREMENTS

March 15, 2014

Bidders shall become familiar with the following requirements and be prepared to comply in good faith with all of them:

APPENDIX A

Notice or Requirement for Affirmative Action to Ensure Equal Employment Opportunity (Executive Order 11246).

1. The Bidder's attention is called to the "Equal Opportunity Clause" and the "Standard Federal Equal Employment Opportunity Construction Contract Specifications" set forth herein.

2. The goals and timetables for minority and female participation, expressed in percentage terms for the Contractor's aggregate work force in each trade on all construction work in the covered area, are as follows:

   a. Goals for Female Participation in Each Trade – Statewide 6.9%

   b. Goals for Minority Participation in Each Trade by County:
      Barnes, Cass, Dickey, Eddy, Foster, Griggs, LaMoure, Logan,
      McIntosh, Ransom, Richland, Sargent, Steele, Stutsman, Traill 0.7%

      Grand Forks 1.2%

      Benson, Cavalier, Nelson, Pembina, Ramsey, Towner, Walsh 2.0%

      Burleigh, Morton 0.4%

      Adams, Billings, Bowman, Dunn, Emmons, Golden Valley, Grant,
      Hettinger, Kidder, Mercer, Oliver, Sheridan, Sioux, Slope, Stark, Wells . . .1.3%

      Bottineau, Burke, Divide, McHenry, McKenzie, McLean, Mountrail,
      Pierce, Renville, Rolette, Ward, Williams 4.4%

These goals are applicable to all the Contractor's construction work (whether or not it is Federal or federally assisted) performed in the covered area. If the contractor performs construction work in a geographical area located outside the covered area, it shall apply the goals established for such geographical area where the work is actually performed. With regard to this second area, the contractor also is subject to the goals for both federally involved and nonfederally involved construction.

The Contractor's compliance with the Executive Order and the regulations in 41 CFR 60-4 shall be based on its implementation of the Equal Opportunity Clause specific affirmative action obligations required by the specifications set forth in 41 CFR 60-4.3 (a),

and its efforts to meet the goals established for the geographical area where the contract resulting from this solicitation is to be performed. The hours of minority and female employment and training must be substantially uniform throughout the length of the contract, and in each trade, and the Contractor shall make a good faith effort to employ minorities and women evenly on each of its projects. The transfer of minority or female employees or trainees from Contractor to Contractor or from project to project for the sole purpose of meeting the Contractor's goals shall be a violation of the contract, the Executive Order, and the regulations in 41 CFR part 60-4. Compliance with the goals will be measured against the total work hours performed.

3. The Contractor shall notify the Office of Federal Contract Compliance Programs, in writing, within ten working days of award of any subcontract in excess of $10,000. The notification shall include the name, address, and telephone number of the subcontractor and their employer identification number; dollar amount of the contract, estimated starting and completion dates of the contract; the contract number; and geographical area in which the contract is to be performed.

   Notification should be sent to:

   U.S. Department of Labor/ESA
   OFCCP
   Denver District Office
   1244 Speer Boulevard
   Denver, Colorado 80202
   Phone: 720-264-3200
   Fax: 720-264-3211

4. As used in this "Notice" and in the contract for this project, the "covered area" is the State of North Dakota.

APPENDIX B

Standard Federal Equal Employment Opportunity Construction Contract Specifications (Executive Order 11246)

1. As used in these specifications:

   a. "Covered area" means the geographical area described in the proposal from which this contract resulted.

   b. "Director" means Director, Office of Federal Contract Compliance Programs, United States Department of Labor, or any person to whom the Director delegates authority.

   c. "Employer identification number" means the Federal Social Security number used on the Employer's Quarterly Federal Tax Return, U.S. Treasury Department Form 941.

   d. "Minority" includes:

(1) Black (all persons having origins in any of the Black African racial groups, not of Hispanic origin);

(2) Hispanic (all persons of Mexican, Puerto Rican, Cuban, Central or South American, or other Spanish Culture or origin, regardless of race);

(3) Asian and Pacific Islander (all persons having origins in any of the original peoples of the Far East, Southeast Asia, the Indian Subcontinent, or the Pacific Islands); and

(4) American Indian or Alaskan Native (all persons having origins in any of the original peoples of North America and maintaining identifiable tribal affiliations through membership and participation of community identification).

2. Whenever the Contractor, or any Subcontractor at any tier, subcontracts a portion of the work involving any construction trade, it shall physically include in each subcontract in excess of $10,000 the provisions of these specifications and the Notice which contains the applicable goals for minority and female participation and which is set forth in the proposal from which this contract resulted.

3. If the Contractor is participating (pursuant to 41 CFR 60-4.5) in a Hometown Plan approved by the U.S. Department of Labor in the covered area either individually or through an association, its affirmative action obligations on all work in the Plan area (including goals and timetables) shall be in accordance with that Plan for those trades which have unions participating in the Plan. Contractors must be able to demonstrate their participation in and compliance with the provisions of any such Hometown Plan. Each Contractor or Subcontractor participating in an approved Plan is individually required to comply with its obligations under the EEO clause, and to make a good faith effort to achieve each goal under the Plan in each trade in which it has employees. The overall good faith performance by other Contractors or Subcontractors toward a goal in an approved Plan does not excuse any covered Contractor's or Subcontractor's failure to take good faith efforts to achieve the Plan goals and timetables.

4. The Contractor shall implement the specific affirmative action standards provided in paragraphs 7a through p of these specifications. The goals set forth in the solicitation from which this contract resulted are expressed as percentages of the total hours of employment and training of minority and female utilization the Contractor should reasonably be able to achieve in each construction trade in which it has employees in the covered area. The Contractor is expected to make substantially uniform progress toward its goals in each craft.

5. Neither the provisions of any collective bargaining agreement, nor the failure by a union with whom the Contractor has a collective bargaining agreement, to refer either minorities or women shall excuse the Contractor's obligations under these specifications, Executive Order 11246, or the regulations promulgated pursuant thereto.

6. In order for the nonworking training hours of apprentices and trainees to be counted

in meeting the goals, such apprentices and trainees must be employed by the Contractor during the training period, and the Contractor must have made a commitment to employ the apprentices and trainees at the completion of their training, subject to the availability of employment opportunities. Trainees must be trained pursuant to training programs approved by the U.S. Department of Labor. (Training programs approved by the North Dakota Department of Transportation are recognized by the U.S. Department of Labor.)

7. The Contractor shall take specific affirmative actions to ensure equal employment opportunity. The evaluation of the Contractor's compliance with these specifications shall be based upon its effort to achieve maximum results from its actions. The Contractor shall document these efforts fully, and shall implement affirmative action steps at least as extensive as the following:

    a. Ensure and maintain a working environment free of harassment, intimidation, and coercion at all sites, and in all facilities at which the Contractor's employees are assigned to work. The Contractor, where possible, will assign two or more women to each construction project. The Contractor shall specifically ensure that all Foremen, Superintendents, and other on-site supervisory personnel are aware of and carry out the Contractor's obligation to maintain such a working environment, with specific attention to minority or female individuals working at such sites or in such facilities.

    b. Establish and maintain a current list of minority and female recruitment sources; provide written notification to minority and female recruitment sources and to community organizations when the Contractor or its union have employment opportunities available, and maintain a record of the organization's responses.

    c. Maintain a current file of the names, addresses, and telephone numbers of each minority and female off-the-street applicant and minority or female referral from a union, a recruitment source or community organization and of what action was taken with respect to each individual. If such individual was sent to the union hiring hall for referral and was not referred back to the Contractor by the union, or if referred, not employed by the Contractor, this shall be documented in the file with the reason therefore, along with whatever additional actions the Contractor may have taken.

    d. Provide immediate written notification to the Director when the union with which the Contractor has a collective bargaining agreement has not referred to the Contractor a minority or woman sent by the Contractor, or when the Contractor has other information that the union referral process has impeded the Contractor's efforts to meet its obligations.

    e. Develop on-the-job training opportunities and/or participate in training programs for the area which expressly include minorities and women, including upgrading programs and apprenticeship and trainee programs relevant to the Contractor's employment needs, especially those programs funded or approved by the Department of Labor. The Contractor shall provide notice of these programs to

the sources compiled under 7b above.

f. Disseminate the Contractor's EEO policy by providing notice of the policy to unions and training programs and requesting their cooperation in assisting the Contractor in meeting its EEO obligations; by including it in any policy manual and collective bargaining agreement; by publicizing it in the Company newspaper, annual report, etc., by specific review of the policy with all management personnel and with all minority and female employees at least once a year; and by posting the Company EEO policy on bulletin boards accessible to all employees at each location where construction work is performed.

g. Review, at least annually, the Company's EEO policy and affirmative action obligations under these specifications with all employees having any responsibility for hiring, assignment, layoff, termination, or other employment decisions including specific review of these items with on- site supervisory personnel such as Superintendents, General Foremen, etc., prior to the initiation of construction work at any job site. A written record shall be made and maintained identifying the time and place of these meetings, persons attending, subject matter discussed, and disposition of the subject matter.

h. Disseminate the Contractor's EEO policy externally by including it in any advertising in the news media, specifically including minority and female news media, and providing written notification to and discussing it with the Contractors and Subcontractors with whom the Contractor does or anticipates doing business.

i. Direct its recruitment efforts, both oral and written, to minority, female, and community organizations, to schools with minority and female students, and to minority and female recruitment and training organizations serving the Contractor's recruitment area and employment needs. Not later than one month prior to the date for the acceptance of applications for apprenticeship or other training by any recruitment source, the Contractor shall send written notification to organizations such as the above, describing the openings, screening procedures, and tests to be used in the selection process.

j. Encourage present minority and female employees to recruit other minorities and women, and where reasonable, provide after school, summer, and vacation employment to minority and female youth both on the site and in other areas of the Contractor's work force.

k. Validate all tests and other selection requirements where there is an obligation to do so under 41 CFR Part 60-3.

l. Conduct, at least annually, an inventory and evaluation at least of all minority and female personnel for promotional opportunities and encourage these to seek or to prepare for, through appropriate training, etc., such opportunities.

m. Ensure that seniority practices, job classifications, work assignments, and other personnel practices do not have a discriminatory effect by continually monitoring

all personnel and employment related activities to ensure that the EEO policy and the Contractor's obligations under these specifications are being carried out.

n. Ensure that all facilities and Company activities are non-segregated except that separate or single-user toilet and necessary changing facilities shall be provided to assure privacy between the sexes.

o. Document and maintain a record of all solicitations of offers for subcontracts from minority and female construction Contractors and Suppliers, including circulation of solicitations to minority and female Contractor associations and other business associations.

p. Conduct a review, at least annually, of all Supervisors' adherence to and performance under the Contractor's EEO policies and affirmative action obligation.

8. Contractors are encouraged to participate in voluntary associations which assist in fulfilling one or more of their affirmative action obligations (7a through p). The efforts of a Contractor association, joint Contractor- union, Contractor-community, or other similar group of which the Contractor is a member and participant, may be asserted as fulfilling any one or more of its obligations under 7a through p of these Specifications provided that the Contractor actively participates in the group, makes every effort to assure that the group has a positive impact on the employment of minorities and women in the industry, ensures that the concrete benefits of the program are reflected in the Contractor's minority and female work force participation, makes a good faith effort to meet its individual goals and timetables, and can provide access to documentation which demonstrates the effectiveness of actions taken on behalf of the Contractor. The obligation to comply, however, is the Contractor's, and failure of such a group to fulfill an obligation shall not be a defense for the Contractor's noncompliance.

9. Goals for minorities and a separate single goal for women have been established. The Contractor, however, is required to provide equal employment opportunity and to take affirmative action for all minorities, both male and female, and all women, both minority and non-minority. Consequently, the Contractor may be in violation of the Executive Order if a particular group is employed in a substantially disparate manner (for example, even though the Contractor has achieved its goals for women generally, the Contractor may be in violation of the Executive Order if a specific minority group of women is underutilized).

10. The Contractor shall not use the goals and timetables or affirmative action standards to discriminate against any person because of race, color, religion, sex, or national origin.

11. The Contractor shall not enter into any subcontract with any person or firm debarred from Government contracts pursuant to Executive Order 11246.

12. The Contractor shall carry out such sanctions and penalties for violation of these specifications and of the Equal Opportunity Clause, including suspension, termina-

tion, and cancellation of existing subcontracts as may be imposed or ordered pursuant to Executive Order 11246, as amended, and its implementing regulations, by the Office of Federal Contract Compliance Programs. Any Contractor who fails to carry out such sanctions and penalties shall be in violation of these specifications and Executive Order 11246, as amended.

13. The Contractor, in fulfilling its obligations under these specifications, shall implement specific affirmative action steps, at least as extensive as those standards prescribed in paragraph 7 of these specifications, so as to achieve maximum results from its efforts to ensure equal employment opportunity. If the Contractor fails to comply with the requirements of the Executive Order, the implementing regulations, or these specifications, the Director shall proceed in accordance with 41 CFR 60-4.8.

14. The Contractor shall designate a responsible official to monitor all employment-related activity to ensure that the Company EEO policy is being carried out, to submit reports relating to the provisions hereof as may be required by the Government, and to keep records. Records shall at least include for each employee the name, address, telephone numbers, construction trade, union affiliation, if any, employee identification number when assigned, social security number, race, sex, status (e.g., mechanic, apprentice, trainee, helper, or laborer), dates of changes in status, hours worked per week in the indicated trade, rate of pay, and locations at which the work was performed. Records shall be maintained in an easily understandable and retrievable form, however, to the degree that existing records satisfy this requirement, Contractors shall not be required to maintain separate records.

15. Nothing herein provided shall be construed as a limitation upon the application of other laws which establish different standards of compliance or upon application of requirements for the hiring of local or other area residents (e.g., those under the Public Works Employment Act of 1977 and the Community Development Block Grant Program).

Effective October 1, 2014

NORTH DAKOTA DEPARTMENT OF TRANSPORTATION
APPENDIX A OF THE TITLE VI ASSURANCES

During the performance of this contract, the Contractor, for itself, its assignees, and successors in interest (hereinafter referred to as the Contractor) agrees as follows:

1. Compliance with Regulations: The Contractor (hereinafter includes consultants) will comply with the Acts and the Regulations relative to Non-discrimination in Federally-assisted programs of the U.S. Department of Transportation, the Federal Highway Administration, as they may be amended from time to time, which are herein incorporated by reference and made a part of this contract.

2. Non-discrimination: The Contractor, with regard to the work performed by it during the contract, will not discriminate on the grounds of race, color, or national origin in the selection and retention of subcontractors, including procurements of materials and leases of equipment. The Contractor will not participate directly or indirectly in the discrimination prohibited by the Acts and the Regulations, including employment practices when the contract covers any activity, project, or program set forth in Appendix B of 49 CFR Part 21.

3. Solicitations for Subcontracts, Including Procurements of Materials and Equipment: In all solicitations, either by competitive bidding, or negotiation made by the Contractor for work to be performed under a subcontract, including procurements of materials, or leases of equipment, each potential subcontractor or supplier will be notified by the Contractor of the Contractor's obligations under this contract and the Acts and the Regulations relative to Non-discrimination on the grounds of race, color, or national origin.

4. Information and Reports: The Contractor will provide all information and reports required by the Acts, the Regulations, and directives issued pursuant thereto and will permit access to its books, records, accounts, other sources of information, and its facilities as may be determined by the Recipient or the Federal Highway Administration to be pertinent to ascertain compliance with such Acts, Regulations, and instructions. Where any information required of a Contractor is in the exclusive possession of another who fails or refuses to furnish the information, the Contractor will so certify to the Recipient or the Federal Highway Administration as appropriate, and will set forth what efforts it has made to obtain the information.

5. Sanctions for Noncompliance: In the event of a contractor's noncompliance with the Non-discrimination provisions of this contract, the Recipient will impose such contract sanctions as it or the Federal Highway Administration may determine to be appropriate, including, but not limited to:

   a. withholding payments to the Contractor under the contract until the Contractor complies; and/or
   b. cancelling, terminating, or suspending a contract, in whole or in part.

6. Incorporation of Provisions: The Contractor will include the provisions of paragraphs one through six in every subcontract, including procurements of materials and leases of equipment, unless exempt by the Acts, the Regulations and directives issued pursuant thereto. The Contractor will take action with respect to any subcontract or procurement as the Recipient or the Federal Highway Administration may direct as a means of enforcing such provisions including sanctions for noncompliance. Provided, that if the Contractor becomes involved in, or is threatened with litigation by a subcontractor, or supplier because of such direction, the Contractor may request the Recipient to enter into any litigation to protect the interests of the Recipient. In addition, the Contractor may request the United States to enter into the litigation to protect the interests of the United States.

Effective October 1, 2014

NORTH DAKOTA DEPARTMENT OF TRANSPORTATION
APPENDIX E OF THE TITLE VI ASSURANCES

During the performance of this contract, the contractor, for itself, its assignees, and successors in interest (hereinafter referred to as the Contractor) agrees to comply with the following non-discrimination statutes and authorities; including but not limited to:

Pertinent Non-Discrimination Authorities:

- Title VI of the Civil Rights Act of 1964 (42 U.S.C. § 2000d *et seq.,* 78 stat. 252), (prohibits discrimination on the basis of race, color, national origin); and 49 CFR Part 21.
- The Uniform Relocation Assistance and Real Property Acquisition Policies Act of 1970, (42 U.S.C. § 4601), (prohibits unfair treatment of persons displaced or whose property has been acquired because of Federal or Federal-aid programs and projects);
- Federal-Aid Highway Act of 1973, (23 U.S.C. § 324 *et seq.),* (prohibits discrimination on the basis of sex);
- Section 504 of the Rehabilitation Act of 1973, (29 U.S.C. § 794 *et seq.),* as amended, (prohibits discrimination on the basis of disability); and 49 CFR Part 27;
- The Age Discrimination Act of 1975, as amended, (42 U.S.C. § 6101 *et seq.),* (prohibits discrimination on the basis of age);
- Airport and Airway Improvement Act of 1982, (49 USC § 471, Section 47123), as amended, (prohibits discrimination based on race, creed, color, national origin, or sex);
- The Civil Rights Restoration Act of 1987, (PL 100-209), (Broadened the scope, coverage and applicability of Title VI of the Civil Rights Act of 1964, The Age Discrimination Act of 1975 and Section 504 of the Rehabilitation Act of 1973, by expanding the definition of the terms "programs or activities" to include all of the programs or activities of the Federal-aid recipients, sub-recipients and contractors, whether such programs or activities are Federally funded or not);
- Titles II and III of the Americans with Disabilities Act, which prohibit discrimination on the basis of disability in the operation of public entities, public and private transportation systems, places of public accommodation, and certain testing entities (42 U.S.C. §§ 12131-12189) as implemented by Department of Transportation regulations at 49 C.F.R. parts 37 and 38;
- The Federal Aviation Administration's Non-discrimination statute (49 U.S.C. § 47123) (prohibits discrimination on the basis of race, color, national origin, and sex);
- Executive Order 12898, Federal Actions to Address Environmental Justice in Minority Populations and Low-Income Populations, which ensures discrimination against minority populations by discouraging programs, policies, and activities with disproportionately high and adverse human health or environmental effects on minority and low-income populations;
- Executive Order 13166, Improving Access to Services for Persons with Limited English Proficiency, and resulting agency guidance, national origin discrimination includes discrimination because of limited English proficiency (LEP). To ensure compliance with Title VI, you must take reasonable steps to ensure that LEP persons have meaningful access to your programs (70 Fed. Reg. at 74087 to 74100);
- Title IX of the Education Amendments of 1972, as amended, which prohibits you from discriminating because of sex in education programs or activities (20 U.S.C. 1681 et seq).

NORTH DAKOTA DEPARTMENT OF TRANSPORTATION

SPECIAL PROVISION

CARGO PREFERENCE ACT (CPA)

DESCRIPTION

The Federal Highway Administration (FHWA) in partnership with the Federal Maritime Administration (MARAD) has mandated the implementation of 46 CFR 381 making the cargo preference requirements applicable to the Federal Aid Highway Program.

The requirements of this Special Provision apply to items transported by ocean vessel.

CONTRACT REQUIREMENTS

A. General

Utilize privately owned United States-flag commercial vessels to ship at least 50 percent of the gross tonnage whenever shipping any equipment, material, or commodities pursuant to this contract, to the extent such vessels are available at fair and reasonable rates for United States-flag commercial vessels. Gross tonnage is computed separately for dry bulk carriers, dry cargo liners, and tankers.

Furnish a legible, English language copy of a rated ‘on-board’ commercial ocean bill-of-lading for each shipment of cargo described in the previous paragraph. Furnish the bill-of-lading within 20 days following the date of loading for shipments originating in the United States and within 30 working days following the date of loading from shipments originating outside the United States.

Furnish bills-of-lading to the Engineer and to the following:

Division of National Cargo
Office of Market Development
Maritime Administration
Washington, DC 20590

B. Subcontracts

Include the language in Section “A, General” of this Special Provision in all subcontracts issued pursuant to this contract.

REQUIRED CONTRACT PROVISIONS
FEDERAL-AID CONSTRUCTION CONTRACTS

I. General
II. Nondiscrimination
III. Nonsegregated Facilities
IV. Davis-Bacon and Related Act Provisions
V. Contract Work Hours and Safety Standards Act Provisions
VI. Subletting or Assigning the Contract
VII. Safety: Accident Prevention
VIII. False Statements Concerning Highway Projects
IX. Implementation of Clean Air Act and Federal Water Pollution Control Act
X. Compliance with Governmentwide Suspension and Debarment Requirements
XI. Certification Regarding Use of Contract Funds for Lobbying

ATTACHMENTS

A. Employment and Materials Preference for Appalachian Development Highway System or Appalachian Local Access Road Contracts (included in Appalachian contracts only)

I. GENERAL

1. Form FHWA-1273 must be physically incorporated in each construction contract funded under Title 23 (excluding emergency contracts solely intended for debris removal). The contractor (or subcontractor) must insert this form in each subcontract and further require its inclusion in all lower tier subcontracts (excluding purchase orders, rental agreements and other agreements for supplies or services).

The applicable requirements of Form FHWA-1273 are incorporated by reference for work done under any purchase order, rental agreement or agreement for other services. The prime contractor shall be responsible for compliance by any subcontractor, lower-tier subcontractor or service provider.

Form FHWA-1273 must be included in all Federal-aid design-build contracts, in all subcontracts and in lower tier subcontracts (excluding subcontracts for design services, purchase orders, rental agreements and other agreements for supplies or services). The design-builder shall be responsible for compliance by any subcontractor, lower-tier subcontractor or service provider.

Contracting agencies may reference Form FHWA-1273 in bid proposal or request for proposal documents, however, the Form FHWA-1273 must be physically incorporated (not referenced) in all contracts, subcontracts and lower-tier subcontracts (excluding purchase orders, rental agreements and other agreements for supplies or services related to a construction contract).

2. Subject to the applicability criteria noted in the following sections, these contract provisions shall apply to all work performed on the contract by the contractor's own organization and with the assistance of workers under the contractor's immediate superintendence and to all work performed on the contract by piecework, station work, or by subcontract.

3. A breach of any of the stipulations contained in these Required Contract Provisions may be sufficient grounds for withholding of progress payments, withholding of final payment, termination of the contract, suspension / debarment or any other action determined to be appropriate by the contracting agency and FHWA.

4. Selection of Labor: During the performance of this contract, the contractor shall not use convict labor for any purpose within the limits of a construction project on a Federal-aid highway unless it is labor performed by convicts who are on parole, supervised release, or probation. The term Federal-aid highway does not include roadways functionally classified as local roads or rural minor collectors.

II. NONDISCRIMINATION

The provisions of this section related to 23 CFR Part 230 are applicable to all Federal-aid construction contracts and to all related construction subcontracts of $10,000 or more. The provisions of 23 CFR Part 230 are not applicable to material supply, engineering, or architectural service contracts.

In addition, the contractor and all subcontractors must comply with the following policies: Executive Order 11246, 41 CFR 60, 29 CFR 1625-1627, Title 23 USC Section 140, the Rehabilitation Act of 1973, as amended (29 USC 794), Title VI of the Civil Rights Act of 1964, as amended, and related regulations including 49 CFR Parts 21, 26 and 27; and 23 CFR Parts 200, 230, and 633.

The contractor and all subcontractors must comply with: the requirements of the Equal Opportunity Clause in 41 CFR 60-1.4(b) and, for all construction contracts exceeding $10,000, the Standard Federal Equal Employment Opportunity Construction Contract Specifications in 41 CFR 60-4.3.

Note: The U.S. Department of Labor has exclusive authority to determine compliance with Executive Order 11246 and the policies of the Secretary of Labor including 41 CFR 60, and 29 CFR 1625-1627. The contracting agency and the FHWA have the authority and the responsibility to ensure compliance with Title 23 USC Section 140, the Rehabilitation Act of 1973, as amended (29 USC 794), and Title VI of the Civil Rights Act of 1964, as amended, and related regulations including 49 CFR Parts 21, 26 and 27; and 23 CFR Parts 200, 230, and 633.

The following provision is adopted from 23 CFR 230, Appendix A, with appropriate revisions to conform to the U.S. Department of Labor (US DOL) and FHWA requirements.

1. Equal Employment Opportunity: Equal employment opportunity (EEO) requirements not to discriminate and to take affirmative action to assure equal opportunity as set forth under laws, executive orders, rules, regulations (28 CFR 35, 29 CFR 1630, 29 CFR 1625-1627, 41 CFR 60 and 49 CFR 27) and orders of the Secretary of Labor as modified by the provisions prescribed herein, and imposed pursuant to 23 U.S.C. 140 shall constitute the EEO and specific affirmative action standards for the contractor's project activities under

this contract. The provisions of the Americans with Disabilities Act of 1990 (42 U.S.C. 12101 et seq.) set forth under 28 CFR 35 and 29 CFR 1630 are incorporated by reference in this contract. In the execution of this contract, the contractor agrees to comply with the following minimum specific requirement activities of EEO:

a. The contractor will work with the contracting agency and the Federal Government to ensure that it has made every good faith effort to provide equal opportunity with respect to all of its terms and conditions of employment and in their review of activities under the contract.

b. The contractor will accept as its operating policy the following statement:

"It is the policy of this Company to assure that applicants are employed, and that employees are treated during employment, without regard to their race, religion, sex, color, national origin, age or disability. Such action shall include: employment, upgrading, demotion, or transfer; recruitment or recruitment advertising; layoff or termination; rates of pay or other forms of compensation; and selection for training, including apprenticeship, pre-apprenticeship, and/or on-the-job training."

2. EEO Officer: The contractor will designate and make known to the contracting officers an EEO Officer who will have the responsibility for and must be capable of effectively administering and promoting an active EEO program and who must be assigned adequate authority and responsibility to do so.

3. Dissemination of Policy: All members of the contractor's staff who are authorized to hire, supervise, promote, and discharge employees, or who recommend such action, or who are substantially involved in such action, will be made fully cognizant of, and will implement, the contractor's EEO policy and contractual responsibilities to provide EEO in each grade and classification of employment. To ensure that the above agreement will be met, the following actions will be taken as a minimum:

a. Periodic meetings of supervisory and personnel office employees will be conducted before the start of work and then not less often than once every six months, at which time the contractor's EEO policy and its implementation will be reviewed and explained. The meetings will be conducted by the EEO Officer.

b. All new supervisory or personnel office employees will be given a thorough indoctrination by the EEO Officer, covering all major aspects of the contractor's EEO obligations within thirty days following their reporting for duty with the contractor.

c. All personnel who are engaged in direct recruitment for the project will be instructed by the EEO Officer in the contractor's procedures for locating and hiring minorities and women.

d. Notices and posters setting forth the contractor's EEO policy will be placed in areas readily accessible to employees, applicants for employment and potential employees.

e. The contractor's EEO policy and the procedures to implement such policy will be brought to the attention of employees by means of meetings, employee handbooks, or other appropriate means.

4. Recruitment: When advertising for employees, the contractor will include in all advertisements for employees the notation: "An Equal Opportunity Employer." All such advertisements will be placed in publications having a large circulation among minorities and women in the area from which the project work force would normally be derived.

a. The contractor will, unless precluded by a valid bargaining agreement, conduct systematic and direct recruitment through public and private employee referral sources likely to yield qualified minorities and women. To meet this requirement, the contractor will identify sources of potential minority group employees, and establish with such identified sources procedures whereby minority and women applicants may be referred to the contractor for employment consideration.

b. In the event the contractor has a valid bargaining agreement providing for exclusive hiring hall referrals, the contractor is expected to observe the provisions of that agreement to the extent that the system meets the contractor's compliance with EEO contract provisions. Where implementation of such an agreement has the effect of discriminating against minorities or women, or obligates the contractor to do the same, such implementation violates Federal nondiscrimination provisions.

c. The contractor will encourage its present employees to refer minorities and women as applicants for employment. Information and procedures with regard to referring such applicants will be discussed with employees.

5. Personnel Actions: Wages, working conditions, and employee benefits shall be established and administered, and personnel actions of every type, including hiring, upgrading, promotion, transfer, demotion, layoff, and termination, shall be taken without regard to race, color, religion, sex, national origin, age or disability. The following procedures shall be followed:

a. The contractor will conduct periodic inspections of project sites to insure that working conditions and employee facilities do not indicate discriminatory treatment of project site personnel.

b. The contractor will periodically evaluate the spread of wages paid within each classification to determine any evidence of discriminatory wage practices.

c. The contractor will periodically review selected personnel actions in depth to determine whether there is evidence of discrimination. Where evidence is found, the contractor will promptly take corrective action. If the review indicates that the discrimination may extend beyond the actions reviewed, such corrective action shall include all affected persons.

d. The contractor will promptly investigate all complaints of alleged discrimination made to the contractor in connection with its obligations under this contract, will attempt to resolve such complaints, and will take appropriate corrective action within a reasonable time. If the investigation indicates that the discrimination may affect persons other than the complainant, such corrective action shall include such other persons. Upon completion of each investigation, the contractor will inform every complainant of all of their avenues of appeal.

6. Training and Promotion:

a. The contractor will assist in locating, qualifying, and increasing the skills of minorities and women who are

applicants for employment or current employees. Such efforts should be aimed at developing full journey level status employees in the type of trade or job classification involved.

b. Consistent with the contractor's work force requirements and as permissible under Federal and State regulations, the contractor shall make full use of training programs, i.e., apprenticeship, and on-the-job training programs for the geographical area of contract performance. In the event a special provision for training is provided under this contract, this subparagraph will be superseded as indicated in the special provision. The contracting agency may reserve training positions for persons who receive welfare assistance in accordance with 23 U.S.C. 140(a).

c. The contractor will advise employees and applicants for employment of available training programs and entrance requirements for each.

d. The contractor will periodically review the training and promotion potential of employees who are minorities and women and will encourage eligible employees to apply for such training and promotion.

7. Unions: If the contractor relies in whole or in part upon unions as a source of employees, the contractor will use good faith efforts to obtain the cooperation of such unions to increase opportunities for minorities and women. Actions by the contractor, either directly or through a contractor's association acting as agent, will include the procedures set forth below:

a. The contractor will use good faith efforts to develop, in cooperation with the unions, joint training programs aimed toward qualifying more minorities and women for membership in the unions and increasing the skills of minorities and women so that they may qualify for higher paying employment.

b. The contractor will use good faith efforts to incorporate an EEO clause into each union agreement to the end that such union will be contractually bound to refer applicants without regard to their race, color, religion, sex, national origin, age or disability.

c. The contractor is to obtain information as to the referral practices and policies of the labor union except that to the extent such information is within the exclusive possession of the labor union and such labor union refuses to furnish such information to the contractor, the contractor shall so certify to the contracting agency and shall set forth what efforts have been made to obtain such information.

d. In the event the union is unable to provide the contractor with a reasonable flow of referrals within the time limit set forth in the collective bargaining agreement, the contractor will, through independent recruitment efforts, fill the employment vacancies without regard to race, color, religion, sex, national origin, age or disability; making full efforts to obtain qualified and/or qualifiable minorities and women. The failure of a union to provide sufficient referrals (even though it is obligated to provide exclusive referrals under the terms of a collective bargaining agreement) does not relieve the contractor from the requirements of this paragraph. In the event the union referral practice prevents the contractor from meeting the obligations pursuant to Executive Order 11246, as amended, and these special provisions, such contractor shall immediately notify the contracting agency.

8. Reasonable Accommodation for Applicants / Employees with Disabilities: The contractor must be familiar with the requirements for and comply with the Americans with Disabilities Act and all rules and regulations established there under. Employers must provide reasonable accommodation in all employment activities unless to do so would cause an undue hardship.

9. Selection of Subcontractors, Procurement of Materials and Leasing of Equipment: The contractor shall not discriminate on the grounds of race, color, religion, sex, national origin, age or disability in the selection and retention of subcontractors, including procurement of materials and leases of equipment. The contractor shall take all necessary and reasonable steps to ensure nondiscrimination in the administration of this contract.

a. The contractor shall notify all potential subcontractors and suppliers and lessors of their EEO obligations under this contract.

b. The contractor will use good faith efforts to ensure subcontractor compliance with their EEO obligations.

10. Assurance Required by 49 CFR 26.13(b):

a. The requirements of 49 CFR Part 26 and the State DOT's U.S. DOT-approved DBE program are incorporated by reference.

b. The contractor or subcontractor shall not discriminate on the basis of race, color, national origin, or sex in the performance of this contract. The contractor shall carry out applicable requirements of 49 CFR Part 26 in the award and administration of DOT-assisted contracts. Failure by the contractor to carry out these requirements is a material breach of this contract, which may result in the termination of this contract or such other remedy as the contracting agency deems appropriate.

11. Records and Reports: The contractor shall keep such records as necessary to document compliance with the EEO requirements. Such records shall be retained for a period of three years following the date of the final payment to the contractor for all contract work and shall be available at reasonable times and places for inspection by authorized representatives of the contracting agency and the FHWA.

a. The records kept by the contractor shall document the following:

(1) The number and work hours of minority and non-minority group members and women employed in each work classification on the project;

(2) The progress and efforts being made in cooperation with unions, when applicable, to increase employment opportunities for minorities and women; and

(3) The progress and efforts being made in locating, hiring, training, qualifying, and upgrading minorities and women;

b. The contractors and subcontractors will submit an annual report to the contracting agency each July for the duration of the project, indicating the number of minority, women, and non-minority group employees currently engaged in each work classification required by the contract work. This information is to be reported on Form FHWA-1391. The staffing data should represent the project work force on board in all or any part of the last payroll period preceding the end of July. If on-the-job training is being required by special provision, the contractor

will be required to collect and report training data. The employment data should reflect the work force on board during all or any part of the last payroll period preceding the end of July.

III. NONSEGREGATED FACILITIES

This provision is applicable to all Federal-aid construction contracts and to all related construction subcontracts of $10,000 or more.

The contractor must ensure that facilities provided for employees are provided in such a manner that segregation on the basis of race, color, religion, sex, or national origin cannot result. The contractor may neither require such segregated use by written or oral policies nor tolerate such use by employee custom. The contractor's obligation extends further to ensure that its employees are not assigned to perform their services at any location, under the contractor's control, where the facilities are segregated. The term "facilities" includes waiting rooms, work areas, restaurants and other eating areas, time clocks, restrooms, washrooms, locker rooms, and other storage or dressing areas, parking lots, drinking fountains, recreation or entertainment areas, transportation, and housing provided for employees. The contractor shall provide separate or single-user restrooms and necessary dressing or sleeping areas to assure privacy between sexes.

IV. DAVIS-BACON AND RELATED ACT PROVISIONS

This section is applicable to all Federal-aid construction projects exceeding $2,000 and to all related subcontracts and lower-tier subcontracts (regardless of subcontract size). The requirements apply to all projects located within the right-of-way of a roadway that is functionally classified as Federal-aid highway. This excludes roadways functionally classified as local roads or rural minor collectors, which are exempt. Contracting agencies may elect to apply these requirements to other projects.

The following provisions are from the U.S. Department of Labor regulations in 29 CFR 5.5 “Contract provisions and related matters” with minor revisions to conform to the FHWA-1273 format and FHWA program requirements.

1. Minimum wages

a. All laborers and mechanics employed or working upon the site of the work, will be paid unconditionally and not less often than once a week, and without subsequent deduction or rebate on any account (except such payroll deductions as are permitted by regulations issued by the Secretary of Labor under the Copeland Act (29 CFR part 3)), the full amount of wages and bona fide fringe benefits (or cash equivalents thereof) due at time of payment computed at rates not less than those contained in the wage determination of the Secretary of Labor which is attached hereto and made a part hereof, regardless of any contractual relationship which may be alleged to exist between the contractor and such laborers and mechanics.

Contributions made or costs reasonably anticipated for bona fide fringe benefits under section 1(b)(2) of the Davis-Bacon Act on behalf of laborers or mechanics are considered wages paid to such laborers or mechanics, subject to the provisions of paragraph 1.d. of this section; also, regular contributions made or costs incurred for more than a weekly period (but not less often than quarterly) under plans, funds, or programs which cover the particular weekly period, are deemed to be constructively made or incurred during such weekly period. Such laborers and mechanics shall be paid the appropriate wage rate and fringe benefits on the wage determination for the classification of work actually performed, without regard to skill, except as provided in 29 CFR 5.5(a)(4). Laborers or mechanics performing work in more than one classification may be compensated at the rate specified for each classification for the time actually worked therein: Provided, That the employer's payroll records accurately set forth the time spent in each classification in which work is performed. The wage determination (including any additional classification and wage rates conformed under paragraph 1.b. of this section) and the Davis-Bacon poster (WH–1321) shall be posted at all times by the contractor and its subcontractors at the site of the work in a prominent and accessible place where it can be easily seen by the workers.

b.(1) The contracting officer shall require that any class of laborers or mechanics, including helpers, which is not listed in the wage determination and which is to be employed under the contract shall be classified in conformance with the wage determination. The contracting officer shall approve an additional classification and wage rate and fringe benefits therefore only when the following criteria have been met:

(i) The work to be performed by the classification requested is not performed by a classification in the wage determination; and

(ii) The classification is utilized in the area by the construction industry; and

(iii) The proposed wage rate, including any bona fide fringe benefits, bears a reasonable relationship to the wage rates contained in the wage determination.

(2) If the contractor and the laborers and mechanics to be employed in the classification (if known), or their representatives, and the contracting officer agree on the classification and wage rate (including the amount designated for fringe benefits where appropriate), a report of the action taken shall be sent by the contracting officer to the Administrator of the Wage and Hour Division, Employment Standards Administration, U.S. Department of Labor, Washington, DC 20210. The Administrator, or an authorized representative, will approve, modify, or disapprove every additional classification action within 30 days of receipt and so advise the contracting officer or will notify the contracting officer within the 30-day period that additional time is necessary.

(3) In the event the contractor, the laborers or mechanics to be employed in the classification or their representatives, and the contracting officer do not agree on the proposed classification and wage rate (including the amount designated for fringe benefits, where appropriate), the contracting officer shall refer the questions, including the views of all interested parties and the recommendation of the contracting officer, to the Wage and Hour Administrator for determination. The Wage and Hour Administrator, or an authorized representative, will issue a determination within 30 days of receipt and so advise the contracting officer or

will notify the contracting officer within the 30-day period that additional time is necessary.

(4) The wage rate (including fringe benefits where appropriate) determined pursuant to paragraphs 1.b.(2) or 1.b.(3) of this section, shall be paid to all workers performing work in the classification under this contract from the first day on which work is performed in the classification.

c. Whenever the minimum wage rate prescribed in the contract for a class of laborers or mechanics includes a fringe benefit which is not expressed as an hourly rate, the contractor shall either pay the benefit as stated in the wage determination or shall pay another bona fide fringe benefit or an hourly cash equivalent thereof.

d. If the contractor does not make payments to a trustee or other third person, the contractor may consider as part of the wages of any laborer or mechanic the amount of any costs reasonably anticipated in providing bona fide fringe benefits under a plan or program, Provided, That the Secretary of Labor has found, upon the written request of the contractor, that the applicable standards of the Davis-Bacon Act have been met. The Secretary of Labor may require the contractor to set aside in a separate account assets for the meeting of obligations under the plan or program.

2. Withholding

The contracting agency shall upon its own action or upon written request of an authorized representative of the Department of Labor, withhold or cause to be withheld from the contractor under this contract, or any other Federal contract with the same prime contractor, or any other federally-assisted contract subject to Davis-Bacon prevailing wage requirements, which is held by the same prime contractor, so much of the accrued payments or advances as may be considered necessary to pay laborers and mechanics, including apprentices, trainees, and helpers, employed by the contractor or any subcontractor the full amount of wages required by the contract. In the event of failure to pay any laborer or mechanic, including any apprentice, trainee, or helper, employed or working on the site of the work, all or part of the wages required by the contract, the contracting agency may, after written notice to the contractor, take such action as may be necessary to cause the suspension of any further payment, advance, or guarantee of funds until such violations have ceased.

3. Payrolls and basic records

a. Payrolls and basic records relating thereto shall be maintained by the contractor during the course of the work and preserved for a period of three years thereafter for all laborers and mechanics working at the site of the work. Such records shall contain the name, address, and social security number of each such worker, his or her correct classification, hourly rates of wages paid (including rates of contributions or costs anticipated for bona fide fringe benefits or cash equivalents thereof of the types described in section 1(b)(2)(B) of the Davis-Bacon Act), daily and weekly number of hours worked, deductions made and actual wages paid. Whenever the Secretary of Labor has found under 29 CFR 5.5(a)(1)(iv) that the wages of any laborer or mechanic include the amount of any costs reasonably anticipated in providing benefits under a plan or program described in section 1(b)(2)(B) of the Davis-Bacon Act, the contractor shall maintain records which show that the commitment to provide such benefits is enforceable, that the plan or program is financially responsible, and that the plan or program has been communicated in writing to the laborers or mechanics affected, and records which show the costs anticipated or the actual cost incurred in providing such benefits. Contractors employing apprentices or trainees under approved programs shall maintain written evidence of the registration of apprenticeship programs and certification of trainee programs, the registration of the apprentices and trainees, and the ratios and wage rates prescribed in the applicable programs.

b.(1) The contractor shall submit weekly for each week in which any contract work is performed a copy of all payrolls to the contracting agency. The payrolls submitted shall set out accurately and completely all of the information required to be maintained under 29 CFR 5.5(a)(3)(i), except that full social security numbers and home addresses shall not be included on weekly transmittals. Instead the payrolls shall only need to include an individually identifying number for each employee (e.g. , the last four digits of the employee's social security number). The required weekly payroll information may be submitted in any form desired. Optional Form WH–347 is available for this purpose from the Wage and Hour Division Web site at http://www.dol.gov/esa/whd/forms/wh347instr.htm or its successor site. The prime contractor is responsible for the submission of copies of payrolls by all subcontractors. Contractors and subcontractors shall maintain the full social security number and current address of each covered worker, and shall provide them upon request to the contracting agency for transmission to the State DOT, the FHWA or the Wage and Hour Division of the Department of Labor for purposes of an investigation or audit of compliance with prevailing wage requirements. It is not a violation of this section for a prime contractor to require a subcontractor to provide addresses and social security numbers to the prime contractor for its own records, without weekly submission to the contracting agency..

(2) Each payroll submitted shall be accompanied by a "Statement of Compliance," signed by the contractor or subcontractor or his or her agent who pays or supervises the payment of the persons employed under the contract and shall certify the following:

(i) That the payroll for the payroll period contains the information required to be provided under §5.5 (a)(3)(ii) of Regulations, 29 CFR part 5, the appropriate information is being maintained under §5.5 (a)(3)(i) of Regulations, 29 CFR part 5, and that such information is correct and complete;

(ii) That each laborer or mechanic (including each helper, apprentice, and trainee) employed on the contract during the payroll period has been paid the full weekly wages earned, without rebate, either directly or indirectly, and that no deductions have been made either directly or indirectly from the full wages earned, other than permissible deductions as set forth in Regulations, 29 CFR part 3;

(iii) That each laborer or mechanic has been paid not less than the applicable wage rates and fringe benefits or cash equivalents for the classification of work performed, as specified in the applicable wage determination incorporated into the contract.

(3) The weekly submission of a properly executed certification set forth on the reverse side of Optional Form WH–347 shall satisfy the requirement for submission of the "Statement of Compliance" required by paragraph 3.b.(2) of this section.

(4) The falsification of any of the above certifications may subject the contractor or subcontractor to civil or criminal prosecution under section 1001 of title 18 and section 231 of title 31 of the United States Code.

c. The contractor or subcontractor shall make the records required under paragraph 3.a. of this section available for inspection, copying, or transcription by authorized representatives of the contracting agency, the State DOT, the FHWA, or the Department of Labor, and shall permit such representatives to interview employees during working hours on the job. If the contractor or subcontractor fails to submit the required records or to make them available, the FHWA may, after written notice to the contractor, the contracting agency or the State DOT, take such action as may be necessary to cause the suspension of any further payment, advance, or guarantee of funds. Furthermore, failure to submit the required records upon request or to make such records available may be grounds for debarment action pursuant to 29 CFR 5.12.

4. Apprentices and trainees

a. Apprentices (programs of the USDOL).

Apprentices will be permitted to work at less than the predetermined rate for the work they performed when they are employed pursuant to and individually registered in a bona fide apprenticeship program registered with the U.S. Department of Labor, Employment and Training Administration, Office of Apprenticeship Training, Employer and Labor Services, or with a State Apprenticeship Agency recognized by the Office, or if a person is employed in his or her first 90 days of probationary employment as an apprentice in such an apprenticeship program, who is not individually registered in the program, but who has been certified by the Office of Apprenticeship Training, Employer and Labor Services or a State Apprenticeship Agency (where appropriate) to be eligible for probationary employment as an apprentice.

The allowable ratio of apprentices to journeymen on the job site in any craft classification shall not be greater than the ratio permitted to the contractor as to the entire work force under the registered program. Any worker listed on a payroll at an apprentice wage rate, who is not registered or otherwise employed as stated above, shall be paid not less than the applicable wage rate on the wage determination for the classification of work actually performed. In addition, any apprentice performing work on the job site in excess of the ratio permitted under the registered program shall be paid not less than the applicable wage rate on the wage determination for the work actually performed. Where a contractor is performing construction on a project in a locality other than that in which its program is registered, the ratios and wage rates (expressed in percentages of the journeyman's hourly rate) specified in the contractor's or subcontractor's registered program shall be observed.

Every apprentice must be paid at not less than the rate specified in the registered program for the apprentice's level of progress, expressed as a percentage of the journeymen hourly rate specified in the applicable wage determination. Apprentices shall be paid fringe benefits in accordance with the provisions of the apprenticeship program. If the apprenticeship program does not specify fringe benefits, apprentices must be paid the full amount of fringe benefits listed on the wage determination for the applicable classification. If the Administrator determines that a different practice prevails for the applicable apprentice classification, fringes shall be paid in accordance with that determination.

In the event the Office of Apprenticeship Training, Employer and Labor Services, or a State Apprenticeship Agency recognized by the Office, withdraws approval of an apprenticeship program, the contractor will no longer be permitted to utilize apprentices at less than the applicable predetermined rate for the work performed until an acceptable program is approved.

b. Trainees (programs of the USDOL).

Except as provided in 29 CFR 5.16, trainees will not be permitted to work at less than the predetermined rate for the work performed unless they are employed pursuant to and individually registered in a program which has received prior approval, evidenced by formal certification by the U.S. Department of Labor, Employment and Training Administration.

The ratio of trainees to journeymen on the job site shall not be greater than permitted under the plan approved by the Employment and Training Administration.

Every trainee must be paid at not less than the rate specified in the approved program for the trainee's level of progress, expressed as a percentage of the journeyman hourly rate specified in the applicable wage determination. Trainees shall be paid fringe benefits in accordance with the provisions of the trainee program. If the trainee program does not mention fringe benefits, trainees shall be paid the full amount of fringe benefits listed on the wage determination unless the Administrator of the Wage and Hour Division determines that there is an apprenticeship program associated with the corresponding journeyman wage rate on the wage determination which provides for less than full fringe benefits for apprentices. Any employee listed on the payroll at a trainee rate who is not registered and participating in a training plan approved by the Employment and Training Administration shall be paid not less than the applicable wage rate on the wage determination for the classification of work actually performed. In addition, any trainee performing work on the job site in excess of the ratio permitted under the registered program shall be paid not less than the applicable wage rate on the wage determination for the work actually performed.

In the event the Employment and Training Administration withdraws approval of a training program, the contractor will no longer be permitted to utilize trainees at less than the applicable predetermined rate for the work performed until an acceptable program is approved.

c. Equal employment opportunity. The utilization of apprentices, trainees and journeymen under this part shall be in conformity with the equal employment opportunity requirements of Executive Order 11246, as amended, and 29 CFR part 30.

d. Apprentices and Trainees (programs of the U.S. DOT).

Apprentices and trainees working under apprenticeship and skill training programs which have been certified by the Secretary of Transportation as promoting EEO in connection with Federal-aid highway construction programs are not subject to the requirements of paragraph 4 of this Section IV. The straight time hourly wage rates for apprentices and trainees under such programs will be established by the particular programs. The ratio of apprentices and trainees to journeymen shall not be greater than permitted by the terms of the particular program.

5. Compliance with Copeland Act requirements. The contractor shall comply with the requirements of 29 CFR part 3, which are incorporated by reference in this contract.

6. Subcontracts. The contractor or subcontractor shall insert Form FHWA-1273 in any subcontracts and also require the subcontractors to include Form FHWA-1273 in any lower tier subcontracts. The prime contractor shall be responsible for the compliance by any subcontractor or lower tier subcontractor with all the contract clauses in 29 CFR 5.5.

7. Contract termination: debarment. A breach of the contract clauses in 29 CFR 5.5 may be grounds for termination of the contract, and for debarment as a contractor and a subcontractor as provided in 29 CFR 5.12.

8. Compliance with Davis-Bacon and Related Act requirements. All rulings and interpretations of the Davis-Bacon and Related Acts contained in 29 CFR parts 1, 3, and 5 are herein incorporated by reference in this contract.

9. Disputes concerning labor standards. Disputes arising out of the labor standards provisions of this contract shall not be subject to the general disputes clause of this contract. Such disputes shall be resolved in accordance with the procedures of the Department of Labor set forth in 29 CFR parts 5, 6, and 7. Disputes within the meaning of this clause include disputes between the contractor (or any of its subcontractors) and the contracting agency, the U.S. Department of Labor, or the employees or their representatives.

10. Certification of eligibility.

a. By entering into this contract, the contractor certifies that neither it (nor he or she) nor any person or firm who has an interest in the contractor's firm is a person or firm ineligible to be awarded Government contracts by virtue of section 3(a) of the Davis-Bacon Act or 29 CFR 5.12(a)(1).

b. No part of this contract shall be subcontracted to any person or firm ineligible for award of a Government contract by virtue of section 3(a) of the Davis-Bacon Act or 29 CFR 5.12(a)(1).

c. The penalty for making false statements is prescribed in the U.S. Criminal Code, 18 U.S.C. 1001.

V. CONTRACT WORK HOURS AND SAFETY STANDARDS ACT

The following clauses apply to any Federal-aid construction contract in an amount in excess of $100,000 and subject to the overtime provisions of the Contract Work Hours and Safety Standards Act. These clauses shall be inserted in addition to the clauses required by 29 CFR 5.5(a) or 29 CFR 4.6. As used in this paragraph, the terms laborers and mechanics include watchmen and guards.

1. Overtime requirements. No contractor or subcontractor contracting for any part of the contract work which may require or involve the employment of laborers or mechanics shall require or permit any such laborer or mechanic in any workweek in which he or she is employed on such work to work in excess of forty hours in such workweek unless such laborer or mechanic receives compensation at a rate not less than one and one-half times the basic rate of pay for all hours worked in excess of forty hours in such workweek.

2. Violation; liability for unpaid wages; liquidated damages. In the event of any violation of the clause set forth in paragraph (1.) of this section, the contractor and any subcontractor responsible therefor shall be liable for the unpaid wages. In addition, such contractor and subcontractor shall be liable to the United States (in the case of work done under contract for the District of Columbia or a territory, to such District or to such territory), for liquidated damages. Such liquidated damages shall be computed with respect to each individual laborer or mechanic, including watchmen and guards, employed in violation of the clause set forth in paragraph (1.) of this section, in the sum of $10 for each calendar day on which such individual was required or permitted to work in excess of the standard workweek of forty hours without payment of the overtime wages required by the clause set forth in paragraph (1.) of this section.

3. Withholding for unpaid wages and liquidated damages. The FHWA or the contacting agency shall upon its own action or upon written request of an authorized representative of the Department of Labor withhold or cause to be withheld, from any moneys payable on account of work performed by the contractor or subcontractor under any such contract or any other Federal contract with the same prime contractor, or any other federally-assisted contract subject to the Contract Work Hours and Safety Standards Act, which is held by the same prime contractor, such sums as may be determined to be necessary to satisfy any liabilities of such contractor or subcontractor for unpaid wages and liquidated damages as provided in the clause set forth in paragraph (2.) of this section.

4. Subcontracts. The contractor or subcontractor shall insert in any subcontracts the clauses set forth in paragraph (1.) through (4.) of this section and also a clause requiring the subcontractors to include these clauses in any lower tier subcontracts. The prime contractor shall be responsible for compliance by any subcontractor or lower tier subcontractor with the clauses set forth in paragraphs (1.) through (4.) of this section.

VI. SUBLETTING OR ASSIGNING THE CONTRACT

This provision is applicable to all Federal-aid construction contracts on the National Highway System.

1. The contractor shall perform with its own organization contract work amounting to not less than 30 percent (or a greater percentage if specified elsewhere in the contract) of the total original contract price, excluding any specialty items designated by the contracting agency. Specialty items may be performed by subcontract and the amount of any such specialty items performed may be deducted from the total original contract price before computing the amount of work required to be performed by the contractor's own organization (23 CFR 635.116).

a. The term “perform work with its own organization” refers to workers employed or leased by the prime contractor, and equipment owned or rented by the prime contractor, with or without operators. Such term does not include employees or equipment of a subcontractor or lower tier subcontractor, agents of the prime contractor, or any other assignees. The term may include payments for the costs of hiring leased employees from an employee leasing firm meeting all relevant Federal and State regulatory requirements. Leased employees may only be included in this term if the prime contractor meets all of the following conditions:

(1) the prime contractor maintains control over the supervision of the day-to-day activities of the leased employees;
(2) the prime contractor remains responsible for the quality of the work of the leased employees;
(3) the prime contractor retains all power to accept or exclude individual employees from work on the project; and
(4) the prime contractor remains ultimately responsible for the payment of predetermined minimum wages, the submission of payrolls, statements of compliance and all other Federal regulatory requirements.

b. "Specialty Items" shall be construed to be limited to work that requires highly specialized knowledge, abilities, or equipment not ordinarily available in the type of contracting organizations qualified and expected to bid or propose on the contract as a whole and in general are to be limited to minor components of the overall contract.

2. The contract amount upon which the requirements set forth in paragraph (1) of Section VI is computed includes the cost of material and manufactured products which are to be purchased or produced by the contractor under the contract provisions.

3. The contractor shall furnish (a) a competent superintendent or supervisor who is employed by the firm, has full authority to direct performance of the work in accordance with the contract requirements, and is in charge of all construction operations (regardless of who performs the work) and (b) such other of its own organizational resources (supervision, management, and engineering services) as the contracting officer determines is necessary to assure the performance of the contract.

4. No portion of the contract shall be sublet, assigned or otherwise disposed of except with the written consent of the contracting officer, or authorized representative, and such consent when given shall not be construed to relieve the contractor of any responsibility for the fulfillment of the contract. Written consent will be given only after the contracting agency has assured that each subcontract is evidenced in writing and that it contains all pertinent provisions and requirements of the prime contract.

5. The 30% self-performance requirement of paragraph (1) is not applicable to design-build contracts; however, contracting agencies may establish their own self-performance requirements.

VII. SAFETY: ACCIDENT PREVENTION

This provision is applicable to all Federal-aid construction contracts and to all related subcontracts.

1. In the performance of this contract the contractor shall comply with all applicable Federal, State, and local laws governing safety, health, and sanitation (23 CFR 635). The contractor shall provide all safeguards, safety devices and protective equipment and take any other needed actions as it determines, or as the contracting officer may determine, to be reasonably necessary to protect the life and health of employees on the job and the safety of the public and to protect property in connection with the performance of the work covered by the contract.

2. It is a condition of this contract, and shall be made a condition of each subcontract, which the contractor enters into pursuant to this contract, that the contractor and any subcontractor shall not permit any employee, in performance of the contract, to work in surroundings or under conditions which are unsanitary, hazardous or dangerous to his/her health or safety, as determined under construction safety and health standards (29 CFR 1926) promulgated by the Secretary of Labor, in accordance with Section 107 of the Contract Work Hours and Safety Standards Act (40 U.S.C. 3704).

3. Pursuant to 29 CFR 1926.3, it is a condition of this contract that the Secretary of Labor or authorized representative thereof, shall have right of entry to any site of contract performance to inspect or investigate the matter of compliance with the construction safety and health standards and to carry out the duties of the Secretary under Section 107 of the Contract Work Hours and Safety Standards Act (40 U.S.C.3704).

VIII. FALSE STATEMENTS CONCERNING HIGHWAY PROJECTS

This provision is applicable to all Federal-aid construction contracts and to all related subcontracts.

In order to assure high quality and durable construction in conformity with approved plans and specifications and a high degree of reliability on statements and representations made by engineers, contractors, suppliers, and workers on Federal-aid highway projects, it is essential that all persons concerned with the project perform their functions as carefully, thoroughly, and honestly as possible. Willful falsification, distortion, or misrepresentation with respect to any facts related to the project is a violation of Federal law. To prevent any misunderstanding regarding the seriousness of these and similar acts, Form FHWA-1022 shall be posted on each Federal-aid highway project (23 CFR 635) in one or more places where it is readily available to all persons concerned with the project:

18 U.S.C. 1020 reads as follows:

"Whoever, being an officer, agent, or employee of the United States, or of any State or Territory, or whoever, whether a person, association, firm, or corporation, knowingly makes any false statement, false representation, or false report as to the character, quality, quantity, or cost of the material used or to be used, or the quantity or quality of the work performed or to be performed, or the cost thereof in connection with the submission of plans, maps, specifications, contracts, or costs of construction on any highway or related project submitted for approval to the Secretary of Transportation; or

Whoever knowingly makes any false statement, false representation, false report or false claim with respect to the character, quality, quantity, or cost of any work performed or to be performed, or materials furnished or to be furnished, in connection with the construction of any highway or related project approved by the Secretary of Transportation; or

Whoever knowingly makes any false statement or false representation as to material fact in any statement, certificate, or report submitted pursuant to provisions of the Federal-aid Roads Act approved July 1, 1916, (39 Stat. 355), as amended and supplemented;

Shall be fined under this title or imprisoned not more than 5 years or both."

IX. IMPLEMENTATION OF CLEAN AIR ACT AND FEDERAL WATER POLLUTION CONTROL ACT

This provision is applicable to all Federal-aid construction contracts and to all related subcontracts.

By submission of this bid/proposal or the execution of this contract, or subcontract, as appropriate, the bidder, proposer, Federal-aid construction contractor, or subcontractor, as appropriate, will be deemed to have stipulated as follows:

1. That any person who is or will be utilized in the performance of this contract is not prohibited from receiving an award due to a violation of Section 508 of the Clean Water Act or Section 306 of the Clean Air Act.
2. That the contractor agrees to include or cause to be included the requirements of paragraph (1) of this Section X in every subcontract, and further agrees to take such action as the contracting agency may direct as a means of enforcing such requirements.

X. CERTIFICATION REGARDING DEBARMENT, SUSPENSION, INELIGIBILITY AND VOLUNTARY EXCLUSION

This provision is applicable to all Federal-aid construction contracts, design-build contracts, subcontracts, lower-tier subcontracts, purchase orders, lease agreements, consultant contracts or any other covered transaction requiring FHWA approval or that is estimated to cost $25,000 or more – as defined in 2 CFR Parts 180 and 1200.

1**. Instructions for Certification – First Tier Participants:**

a. By signing and submitting this proposal, the prospective first tier participant is providing the certification set out below.

b. The inability of a person to provide the certification set out below will not necessarily result in denial of participation in this covered transaction. The prospective first tier participant shall submit an explanation of why it cannot provide the certification set out below. The certification or explanation will be considered in connection with the department or agency's determination whether to enter into this transaction. However, failure of the prospective first tier participant to furnish a certification or an explanation shall disqualify such a person from participation in this transaction.

c. The certification in this clause is a material representation of fact upon which reliance was placed when the contracting agency determined to enter into this transaction. If it is later determined that the prospective participant knowingly rendered an erroneous certification, in addition to other remedies available to the Federal Government, the contracting agency may terminate this transaction for cause of default.

d. The prospective first tier participant shall provide immediate written notice to the contracting agency to whom this proposal is submitted if any time the prospective first tier participant learns that its certification was erroneous when submitted or has become erroneous by reason of changed circumstances.

e. The terms "covered transaction," "debarred," "suspended," "ineligible," "participant," "person," "principal," and "voluntarily excluded," as used in this clause, are defined in 2 CFR Parts 180 and 1200. “First Tier Covered Transactions” refers to any covered transaction between a grantee or subgrantee of Federal funds and a participant (such as the prime or general contract). “Lower Tier Covered Transactions” refers to any covered transaction under a First Tier Covered Transaction (such as subcontracts). “First Tier Participant” refers to the participant who has entered into a covered transaction with a grantee or subgrantee of Federal funds (such as the prime or general contractor). “Lower Tier Participant” refers any participant who has entered into a covered transaction with a First Tier Participant or other Lower Tier Participants (such as subcontractors and suppliers).

f. The prospective first tier participant agrees by submitting this proposal that, should the proposed covered transaction be entered into, it shall not knowingly enter into any lower tier covered transaction with a person who is debarred, suspended, declared ineligible, or voluntarily excluded from participation in this covered transaction, unless authorized by the department or agency entering into this transaction.

g. The prospective first tier participant further agrees by submitting this proposal that it will include the clause titled "Certification Regarding Debarment, Suspension, Ineligibility and Voluntary Exclusion-Lower Tier Covered Transactions," provided by the department or contracting agency, entering into this covered transaction, without modification, in all lower tier covered transactions and in all solicitations for lower tier covered transactions exceeding the $25,000 threshold.

h. A participant in a covered transaction may rely upon a certification of a prospective participant in a lower tier covered transaction that is not debarred, suspended, ineligible, or voluntarily excluded from the covered transaction, unless it knows that the certification is erroneous. A participant is responsible for ensuring that its principals are not suspended, debarred, or otherwise ineligible to participate in covered transactions. To verify the eligibility of its principals, as well as the eligibility of any lower tier prospective participants, each participant may, but is not required to, check the Excluded Parties List System website (https://www.epls.gov/), which is compiled by the General Services Administration.

i. Nothing contained in the foregoing shall be construed to require the establishment of a system of records in order to render in good faith the certification required by this clause. The knowledge and information of the prospective participant is not required to exceed that which is normally possessed by a prudent person in the ordinary course of business dealings.

j. Except for transactions authorized under paragraph (f) of these instructions, if a participant in a covered transaction knowingly enters into a lower tier covered transaction with a person who is suspended, debarred, ineligible, or voluntarily excluded from participation in this transaction, in addition to other remedies available to the Federal Government, the department or agency may terminate this transaction for cause or default.

* * * * *

2. Certification Regarding Debarment, Suspension, Ineligibility and Voluntary Exclusion – First Tier Participants:

a. The prospective first tier participant certifies to the best of its knowledge and belief, that it and its principals:

(1) Are not presently debarred, suspended, proposed for debarment, declared ineligible, or voluntarily excluded from participating in covered transactions by any Federal department or agency;

(2) Have not within a three-year period preceding this proposal been convicted of or had a civil judgment rendered against them for commission of fraud or a criminal offense in connection with obtaining, attempting to obtain, or performing a public (Federal, State or local) transaction or contract under a public transaction; violation of Federal or State antitrust statutes or commission of embezzlement, theft, forgery, bribery, falsification or destruction of records, making false statements, or receiving stolen property;

(3) Are not presently indicted for or otherwise criminally or civilly charged by a governmental entity (Federal, State or local) with commission of any of the offenses enumerated in paragraph (a)(2) of this certification; and

(4) Have not within a three-year period preceding this application/proposal had one or more public transactions (Federal, State or local) terminated for cause or default.

b. Where the prospective participant is unable to certify to any of the statements in this certification, such prospective participant shall attach an explanation to this proposal.

2. **Instructions for Certification - Lower Tier Participants:**

(Applicable to all subcontracts, purchase orders and other lower tier transactions requiring prior FHWA approval or estimated to cost $25,000 or more - 2 CFR Parts 180 and 1200)

a. By signing and submitting this proposal, the prospective lower tier is providing the certification set out below.

b. The certification in this clause is a material representation of fact upon which reliance was placed when this transaction was entered into. If it is later determined that the prospective lower tier participant knowingly rendered an erroneous certification, in addition to other remedies available to the Federal Government, the department, or agency with which this transaction originated may pursue available remedies, including suspension and/or debarment.

c. The prospective lower tier participant shall provide immediate written notice to the person to which this proposal is submitted if at any time the prospective lower tier participant learns that its certification was erroneous by reason of changed circumstances.

d. The terms "covered transaction," "debarred," "suspended," "ineligible," "participant," "person," "principal," and "voluntarily excluded," as used in this clause, are defined in 2 CFR Parts 180 and 1200. You may contact the person to which this proposal is submitted for assistance in obtaining a copy of those regulations. “First Tier Covered Transactions” refers to any covered transaction between a grantee or subgrantee of Federal funds and a participant (such as the prime or general contract). “Lower Tier Covered Transactions” refers to any covered transaction under a First Tier Covered Transaction (such as subcontracts). “First Tier Participant” refers to the participant who has entered into a covered transaction with a grantee or subgrantee of Federal funds (such as the prime or general contractor). “Lower Tier Participant” refers any participant who has entered into a covered transaction with a First Tier Participant or other Lower Tier Participants (such as subcontractors and suppliers).

e. The prospective lower tier participant agrees by submitting this proposal that, should the proposed covered transaction be entered into, it shall not knowingly enter into any lower tier covered transaction with a person who is debarred, suspended, declared ineligible, or voluntarily excluded from participation in this covered transaction, unless authorized by the department or agency with which this transaction originated.

f. The prospective lower tier participant further agrees by submitting this proposal that it will include this clause titled "Certification Regarding Debarment, Suspension, Ineligibility and Voluntary Exclusion-Lower Tier Covered Transaction," without modification, in all lower tier covered transactions and in all solicitations for lower tier covered transactions exceeding the $25,000 threshold.

g. A participant in a covered transaction may rely upon a certification of a prospective participant in a lower tier covered transaction that is not debarred, suspended, ineligible, or voluntarily excluded from the covered transaction, unless it knows that the certification is erroneous. A participant is responsible for ensuring that its principals are not suspended, debarred, or otherwise ineligible to participate in covered transactions. To verify the eligibility of its principals, as well as the eligibility of any lower tier prospective participants, each participant may, but is not required to, check the Excluded Parties List System website (https://www.epls.gov/), which is compiled by the General Services Administration.

h. Nothing contained in the foregoing shall be construed to require establishment of a system of records in order to render in good faith the certification required by this clause. The knowledge and information of participant is not required to exceed that which is normally possessed by a prudent person in the ordinary course of business dealings.

i. Except for transactions authorized under paragraph e of these instructions, if a participant in a covered transaction knowingly enters into a lower tier covered transaction with a person who is suspended, debarred, ineligible, or voluntarily excluded from participation in this transaction, in addition to other remedies available to the Federal Government, the

department or agency with which this transaction originated may pursue available remedies, including suspension and/or debarment.

* * * * *

Certification Regarding Debarment, Suspension, Ineligibility and Voluntary Exclusion--Lower Tier Participants:

1. The prospective lower tier participant certifies, by submission of this proposal, that neither it nor its principals is presently debarred, suspended, proposed for debarment, declared ineligible, or voluntarily excluded from participating in covered transactions by any Federal department or agency.

2. Where the prospective lower tier participant is unable to certify to any of the statements in this certification, such prospective participant shall attach an explanation to this proposal.

* * * * *

XI. CERTIFICATION REGARDING USE OF CONTRACT FUNDS FOR LOBBYING

This provision is applicable to all Federal-aid construction contracts and to all related subcontracts which exceed $100,000 (49 CFR 20).

1. The prospective participant certifies, by signing and submitting this bid or proposal, to the best of his or her knowledge and belief, that:

a. No Federal appropriated funds have been paid or will be paid, by or on behalf of the undersigned, to any person for influencing or attempting to influence an officer or employee of any Federal agency, a Member of Congress, an officer or employee of Congress, or an employee of a Member of Congress in connection with the awarding of any Federal contract, the making of any Federal grant, the making of any Federal loan, the entering into of any cooperative agreement, and the extension, continuation, renewal, amendment, or modification of any Federal contract, grant, loan, or cooperative agreement.

b. If any funds other than Federal appropriated funds have been paid or will be paid to any person for influencing or attempting to influence an officer or employee of any Federal agency, a Member of Congress, an officer or employee of Congress, or an employee of a Member of Congress in connection with this Federal contract, grant, loan, or cooperative agreement, the undersigned shall complete and submit Standard Form-LLL, "Disclosure Form to Report Lobbying," in accordance with its instructions.

2. This certification is a material representation of fact upon which reliance was placed when this transaction was made or entered into. Submission of this certification is a prerequisite for making or entering into this transaction imposed by 31 U.S.C. 1352. Any person who fails to file the required certification shall be subject to a civil penalty of not less than $10,000 and not more than $100,000 for each such failure.

3. The prospective participant also agrees by submitting its bid or proposal that the participant shall require that the language of this certification be included in all lower tier subcontracts, which exceed $100,000 and that all such recipients shall certify and disclose accordingly.

ATTACHMENT A - EMPLOYMENT AND MATERIALS PREFERENCE FOR APPALACHIAN DEVELOPMENT HIGHWAY SYSTEM OR APPALACHIAN LOCAL ACCESS ROAD CONTRACTS

This provision is applicable to all Federal-aid projects funded under the Appalachian Regional Development Act of 1965.

1. During the performance of this contract, the contractor undertaking to do work which is, or reasonably may be, done as on-site work, shall give preference to qualified persons who regularly reside in the labor area as designated by the DOL wherein the contract work is situated, or the subregion, or the Appalachian counties of the State wherein the contract work is situated, except:

a. To the extent that qualified persons regularly residing in the area are not available.

b. For the reasonable needs of the contractor to employ supervisory or specially experienced personnel necessary to assure an efficient execution of the contract work.

c. For the obligation of the contractor to offer employment to present or former employees as the result of a lawful collective bargaining contract, provided that the number of nonresident persons employed under this subparagraph (1c) shall not exceed 20 percent of the total number of employees employed by the contractor on the contract work, except as provided in subparagraph (4) below.

2. The contractor shall place a job order with the State Employment Service indicating (a) the classifications of the laborers, mechanics and other employees required to perform the contract work, (b) the number of employees required in each classification, (c) the date on which the participant estimates such employees will be required, and (d) any other pertinent information required by the State Employment Service to complete the job order form. The job order may be placed with the State Employment Service in writing or by telephone. If during the course of the contract work, the information submitted by the contractor in the original job order is substantially modified, the participant shall promptly notify the State Employment Service.

3. The contractor shall give full consideration to all qualified job applicants referred to him by the State Employment Service. The contractor is not required to grant employment to any job applicants who, in his opinion, are not qualified to perform the classification of work required.

4. If, within one week following the placing of a job order by the contractor with the State Employment Service, the State Employment Service is unable to refer any qualified job applicants to the contractor, or less than the number requested, the State Employment Service will forward a certificate to the contractor indicating the unavailability of applicants. Such certificate shall be made a part of the contractor's permanent project records. Upon receipt of this certificate, the contractor may employ persons who do not normally reside in the labor area to fill positions covered by the certificate, notwithstanding the provisions of subparagraph (1c) above.

5. The provisions of 23 CFR 633.207(e) allow the contracting agency to provide a contractual preference for the use of mineral resource materials native to the Appalachian region.

6. The contractor shall include the provisions of Sections 1 through 4 of this Attachment A in every subcontract for work which is, or reasonably may be, done as on-site work.

REVISED 10/24/2015

CONTRACT SPECIAL PROVISION

AUTOMATED CERTIFIED PAYROLL

All Contractors on NDDOT federal-aid projects must file weekly Certified Payroll, as required by the Davis-Bacon Act and Related Acts (DBRA). NDDOT is moving to LCP Tracker, which is a paperless, online system for entering certified payrolls. Use of LCP Tracker will eliminate certified payroll in paper form, and contractors will only need access to a computer and an internet connection.
NDDOT encourages all contractors to file their payroll electronically, but at this time both paper and electronic submissions will be accepted.

As the option for electronic filings of Certified Payroll is offered, the responsibilities of the parties will be as follows:

Prime Contractor: After award, the Prime Contractor will receive an email and will be asked to set up a log-in and password with LCP Tracker. Whether or not the prime contractor chooses to file electronically, they must set up a Prime Approver account which will allow subcontractors to file electronically. The Prime Contractor will input information on all subcontractors and will be responsible for the review of any payrolls filed electronically. After Prime contractor approval, all electronic payrolls will automatically be forwarded to the NDDOT. The Prime Contractor will continue to be responsible for review of payrolls filed in paper form by subcontractors, and to forward these paper payrolls to the NDDOT as required under Davis-Bacon and Related Acts (DBRA).

Subcontractor: If a subcontractor chooses to file electronically, they will set up an account and receive a password and log-in. This will allow electronic filing of the certified payrolls with the Prime Approver (Prime Contractor). Alternatively, the subcontractor may file the Certified Payrolls in paper form.

NDDOT: The Project Engineer and staff will review the payrolls and will work through the Prime Contractor to address any issues with subcontractors, whether filed electronically or by paper. Access to LCP Tracker will be provided free of charge to contractors.

Information on LCP Tracker is available at www.lcptracker.com. Once a contractor is set up with an account, they may take advantage of self-guided online tutorials at www.lcptracker.net.

For further information on certified payroll, go to the NDDOT Labor Compliance page at https://www.dot.nd.gov/divisions/civilrights/laborcompliance.htm.

LABOR RATES FROM U.S. DEPARTMENT OF LABOR

NDDOT's *Davis-Bacon Wage and Payroll Requirements Handbook* is available at:
www.dot.nd.gov/manuals/civilrights/davisbacon.pdf

U.S. DEPARTMENT OF LABOR

STATE	COUNTY	DECISION NO.	PAGE
NORTH DAKOTA	STATEWIDE	ND160002	1
		DATE OF DECISION 1-8-16	

	Basic Hourly Rates	Fringe Benefits Payments			
		H & W/Pensions	Vacation	App. Tr	Others
CARPENTERS	$27.10	$ 5.60			
CEMENT MASONS/FINISHERS	27.10	5.60			
LINE CONSTRUCTION:					
Lineman	36.30	5.00 + 29.5%			
Cable Splicer	34.15	5.00 + 29.5%			
Line Equipment Operator	32.67	5.00 + 29.5%			
Groundman	21.78	5.00 + 29.5%			
ELECTRICIANS:					
Electrician	33.29	8.62 + 10.5%			
Cable Splicer	32.89	8.62 + 10.5%			
(Adams, Billings, Bottineau, Bowman, Burke, Burleigh, Divide, Dunn, Emmons, Golden Valley, Grant, Hettinger, McHenry, McKenzie, McLean, Mercer, Morton, Mountrail, Oliver, Pierce, Renville, Rolette, Sheridan, Sioux, Slope, Stark, Ward, and Williams Counties)					
Electrician	27.59	11.37			
Cable Splicer	28.30	11.26			
(Barnes, Benson, Cavalier, Dickey, Eddy, Foster, Grand Forks, Griggs, Kidder, La-Moure, Logan, McIntosh, Nelson, Pembina, Ramsey, Ransom, Richland, Sargent, Steele, Stutsman, Towner, Traill, Walsh, and Wells Counties)					
Electrician (Cass County)	14.72	3.40			
WELDERS: Receive rate prescribed for craft performing operation to which welding is incidental					
LABORERS:					
Group 1 Drill Runner Tender; Flaggers and Pilot Car Drivers; General Construction Laborer; Light Truck and Pickup Driver; Pipe Handler; Sack Shaker (cement and mineral filler); Salamander Heater and Blower Tender	19.50	1.70			

	Basic Hourly Rates	Fringe Benefits Payments			
		H & W/Pensions	Vacation	App. Tr.	Others
LABORERS: (CONT.)					
Group 2 Bituminous Worker (Shoveler, Dumper, Raker, and Floater); Brick and Mason Tender; Bulk Cement Handler; Carpenter Tender; Chain Saw Operator; Chipping Hammer, Grinders, and Paving Brakers (tamper-dirt); Concrete Bucket Signalman; Concrete Curing Man (not water); Concrete Saw Operator; Concrete Vibrator Operator; Conduit Layer, telephone or electrical; Culvert Pipe Layer; Form Setter (pavement); Gas, Electric, or Pneumatic Tool Operator; Kettleman (bitum. or lead); Multiplate Pipe Layer; Power Buggy Operator; Semi Skilled Laborer	$19.75	$ 1.70			
Group 3 Bottom Man (sanitary sewer, storm sewer, water, and gas lines); Caisson Worker; Concrete Mixer Operator (one bag capacity); Mortar Mixer	19.90	1.70			
Group 4 Drill Runner (includes Wagon Churn or Air Track); Pipe Layers (sanitary sewer, storm sewer, water, and gas lines); Powderman, gunite and sandblast; Nozzleman; Reinforcing Steel Setters/Tiers: Concrete Finisher Tender	20.65	1.70			
POWER EQUIPMENT OPERATORS:					
Group 1 All Cranes, 60 tons and over; Cranes doing piling, sheeting, dragline/clam work; Derrick (Guy and Stiff);Gentry Crane Operator; Helicopter Operator; Mole Operator or Tunnel Mucking Machine; Power Shovel, 3-1/2 cy and over; Traveling Tower Crane	27.25	14.85			
Group 2 All Cranes, 21 tons and up to 59 tons; Backhoe Operator, 3 cy and over; Creter Crane; Dredge Operator, 12” and over; Equipment Dispatcher; Finish Motor Grader; Front End Loader Operator, 8 cy and over; Master Mechanic (when super-vising 5 or more Mechanics); Mon-O-Rail Hoist Operator; Power Shovel, up to and including 3-1/2 cy; Tugboat	26.35	14.85			

ND160002 Page 3

	Basic Hourly Rates	Fringe Benefits Payments			
		H & W/Pensions	Vacation	App. Tr.	Others
POWER EQUIP. OPERATORS: (CONT.)					
Group 3 All Cranes, 20 tons and under; Asphalt Paving Machine Operator; Asphalt Plant Operator; Automated Grade Trimmer; Backhoe Operator, 1 cy up to and including 2-1/2 cy; Boom Truck, Hydraulic, 8 tons and over; Cableway Operator; Concrete Batch Plant Operator (electronic or manual); Concrete Mixer Paving Machine Operator; Concrete Paver, Bridge Decks; Concrete Pump; Concrete Spreader Operator and Belt Placer; Crushing Plant Operator; Dozer Operator; Dredge Operator or Engineer, 11” and under; Drill Rigs, Heavy Duty Rotary or Churn or Cable Drill; Front End Loader Operator, 3-1/2 cy up to and including 7-1/2 cy; Gravel Washing and Screening Plant Operator; Locomotive, all types; Mechanic or Welder, Heavy Duty; Motor Grader Operator; Pavement Breaker, Non-Hydro Hammer Type: Pipeline Wrapping, Cleaning, and Bending Machine Operator; Power Actuated Auger and Horizontal Boring Machine Operator, 6” and over; Refrigeration Plant Engineer; Roto Milling Machine (Surface Planer), 43” and over; Scraper Operator; Slip Form Concrete Paving Operator; Tandem Pushed Quad 9 or similar; Tractor with Boom Attachment; Trenching Machine Operator, 100 H.P. and over	$26.10	$14.85			
Group 4 Articulated/Off Road Hauler; Asphalt Dump Person; Asphalt Paving Screed Operator; Backhoe, up to and including 1/2 cy; Boring Machine Locator: Con-sole Board Operator; Distributor Operator (Bituminous); Forklift Operator; Front End Loader, 1-1/2 cy up to and including 3 cy; Grade Person; Gravel Screening Plant Operator (not Crushing or Washing); Greaser; Lazer Screed Operator; longitudinal Float and Spray Operator; Micro Surfacer Machine; Motor Grader Operator (Haul Road); Paving Breaker, Hydro Hammer Type; Pugmill Operator; Push Tractor; Roller, Steel and Rubber on Hot Mix Asphalt Paving; Rotomill Machine (Surface Planer), up to and including 42”; Rumble Strip Machine; Sand and Chip Spreader; Self-Propelled Sheepsfoot Packer with or without Blade Attachment; Self-Propelled Traveling Soil Stabilizer; Sheepsfoot					

	Basic Hourly Rates	Fringe Benefits Payments			
		H & W/Pensions	Vacation	App. Tr.	Others
POWER EQUIP. OPERATORS: (CONT.)					
Group 4 (cont.)					
Packer with Dozer Attachment, 100 H.P. and over; Shouldering Machine; Slip Form, Curb and Gutter Operator; Slurry Seal Machine; Tamping Machine Operator; Tie Tamper and Ballast Machine; Trenching Machine Operator, 46 H.P. up to and including 99 H.P.; Truck Mechanic; Tub Grinder; Well Points; Fuel/Lube Operator	$25.95	$14.85			
Group 5					
Boom Truck, A-Frame or Hydraulic, 2 tons up to and including 7 tons; Broom, Self-Propelled; Concrete Saw (power operated); Cure Bridge Operator; Front End Loader Operator, less than 1-1/2 cy; Mobile Cement Mixer; Oiler; Power Actuated Auger and Horizontal Boring Machine Operator, up to and including 5"; Roller (on other than hot mix asphalt paving); Vibrating Packer Operator (Pad Type) (Self-Propelled); Water Spraying Equipment, Self-Propelled; Skidsteer Operator with attachments	25.10	14.85			
Group 6					
Brakeman or Switchman; Curb Machine Operator (Manual); Dredge or Tugboat Deckhand; Drill Truck Gravel/Testing Operator; Form Trench Digger (Power); Gunite Operator Gunall; Paint Machine Striping Operator; Pick-up Sweeper, 1 cy and over Hopper Capacity; Scissor Jack (Self-Propelled) Platform Lift; Straw Mulcher and Blower; Stump Chipper Operator; Tractor Pulling Compaction or Areating Equipment; Trenching Machine Operator, up to and including 45 H.P.; Assistant/Apprentice Operator	23.80	14.85			
TRUCK DRIVERS:					
Single-Axle Truck	26.67	11.60			
Tandem- and Tri-Axle Truck	26.79	11.60			
Tandem- and Tri-Axle Semi	27.10	11.60			
Lowboy	27.10	11.60			
Off Road Heavy Duty End Dumps, 20 Yards and Under	27.10	11.60			
Euclid, Over 20 Yards	28.62	11.60			

Unlisted classifications needed for work not included within the scope of the classifications listed may be added after award only as provided in the labor standards contract clauses [29 CFR, 5.5 (a) (1) (ii)].

NORTH DAKOTA DEPARTMENT OF TRANSPORTATION (NDDOT)

2016 ON-THE-JOB TRAINING SPECIAL PROVISION

The bidder's signature on the proposal sheet indicates the bidder agrees to take part in the On-the-Job Training (OJT) Program and to follow this OJT Special Provision. Contractors that fail to follow this special provision will be subject to suspension of progress payments or sanctions up to and including revocation of bidding privileges.

I. POLICY STATEMENT

The purpose of the OJT Program is to provide training in the highway construction industry for minority, female, and economically disadvantaged individuals, hereafter known as the targeted group. Pursuant to 23 Code of Federal Regulations Part 230, Subpart A, Appendix B - Training Special Provisions, this program provides for on-the-job training aimed at developing full journeyworkers in the type of trade or job classification involved. Training and upgrading minorities and women in highway construction trades is the primary goal of the program.

The Contractor shall take all necessary and reasonable steps to ensure that minorities and women have the opportunity to compete for and participate as trainees or apprentices and to develop as journey-level workers in the type of trade or job classification employed. Contractors may use the NDDOT OJT preapproved training programs, apprentices in approved Bureau of Apprenticeship and Training (BAT) programs, or submit their own on-the job training curriculum for approval by NDDOT and Federal Highway Administration (FHWA).

II. ASSIGNED OJT POSITIONS

A. Contractors are assigned trainee positions based on federal highway dollars awarded by NDDOT to a contractor from October 1 to September 30. Trainee assignments are not project specific. The number of trainee positions assigned will be determined by formula outlined in the OJT Program Manual. https://www.dot.nd.gov/divisions/civilrights/docs/ojtprogram.pdf.

B. Contractors will receive the number of positions assigned and links to resources necessary for completion of program requirements via email.

C. The number of trainee positions assigned to each contractor will increase proportionately, as shown in the OJT Program Manual, for any applicable federally funded projects awarded to them.

Failure to follow this OJT Special Provision and the accompanying OJT Program Manual may result in suspension of progress payments or sanctions up to and including revocation of bidding privileges.

III. ONLINE RESOURCES

OJT Program Manual: Includes program requirements, wage rates, and curriculum: https://www.dot.nd.gov/divisions/civilrights/docs/ojtprogram.pdf

SFN 9762 Request for On-the-Job Training Program Approval: http://www.dot.nd.gov/forms/sfn09762.pdf

SFN 60226 Request for On-the-Job Trainee Approval: http://www.dot.nd.gov/forms/sfn60226.pdf

SFN 51023 Voucher for On-the-Job Training Program Hourly Reimbursement: http://www.dot.nd.gov/forms/sfn51023.pdf

Davis-Bacon and Related Acts (DBRA) Handbook: https://www.dot.nd.gov/manuals/civilrights/davisbacon.pdf

IV. APPROVALS REQUIRED

A. Requests for Approval of Training Programs and Trainee Candidates must be submitted to Civil Rights Division (CRD). Contractors must request and receive program and trainee candidate approval in order to pay trainees less than the established Davis-Bacon wage for the job classification concerned. No training

program hours will count toward the fulfillment of an assigned trainee position or be eligible for reimbursement without prior approval. No retroactive approval will be granted.

1. Submit *SFN 9762 Request for On-the-Job Training Program Approval* and the pre-approved training curriculum for each trainee position assigned by April 1 or within fifteen (15) calendar days of notification of any additional position assignments. http://www.dot.nd.gov/forms/sfn09762.pdf

2. Submit SFN 60226 *Request for On-the-Job Trainee Approval* and each trainee's employment application. http://www.dot.nd.gov/forms/sfn60226.pdf

3. Submit *SFN 7857 Application for Eligibility,* completed/approved by Job Service North Dakota (JSND) to qualify an economically disadvantaged individual for participation in the OJT Program.

B. Pre-approved curriculum: NDDOT's OJT Program Manual contains pre-approved training curriculum for a number of skilled trade positions. Contractors should select a training program(s) based on their company's employment/staffing needs.

C. Customized curriculum: To request a training curriculum not included in the pre-approved curriculum, submit a written request for approval by NDDOT and FHWA.

The request must include:

- A training curriculum, including the classification requested, minimum number of hours required, and type of training the individual will receive to achieve journeyworker status.
- A minimum wage scale.

If approved, each new classification must comply with the provisions specified in the OJT Program Manual. No hours worked prior to approval will be credited toward completion of the customized training program. Training programs for classifications not covered by the Davis-Bacon and Related Acts (DBRA) will be considered on a limited basis.

The contractor may commence its "customized" training as of the date of the written approval.

D. Union apprenticeship and on-the-job training programs registered with the Bureau of Apprenticeship and Training (BAT), U.S. Department of Labor, may be used for trainee positions assigned under the OJT Program, provided the trainees or apprentices are minority, female, or economically disadvantaged. Nonminority males not certified as economically disadvantaged may only be used when the contractor has requested and received approval, from the Department, for additional trainee positions. The apprenticeship indenture agreements serve as the trainee's job application and must be provided prior to any hours being credited toward OJT Program completion.

E. Power Equipment Operators:

The contractor may train an individual on a combination of equipment if each piece of equipment falls within the same groups of power equipment operators identified in the training curricula (groups 1-3 and groups 4-6). These power equipment operator groups are referenced to the federal DBRA wage rates contained in the contract proposal. As an example, a "utility operator" may receive training on a broom, a front-end loader less than 1½ cubic yards, or other piece of equipment that is used around a paver if each piece falls within either groups 1-3 or groups 4-6. When multiple wage rates apply, the trainee's wage will be based on the equipment being operated at the time or on the highest of the applicable wage rates.

Use of the classification "pickup machine operator (asphalt dump-person)" as a group 4 power equipment operator is considered standard industry practice. The classification is defined as: "Operates the controls on the pickup machine that runs in front of the paver, trips the levers on the dump trucks, and balances the loads for the paver. The pickup machine operates on similar principles as a shouldering machine."

V. NDDOT'S RESPONSIBILITIES

A. The NDDOT OJT supportive services (OJTSS) consultant will monitor excerpts from the weekly certified payrolls submitted with the monthly vouchers for reimbursement. This includes weekly payrolls from contractors working on state funded only projects. The OJTSS consultant will assess when the trainees have completed the specified number of hours and their wages are increased accordingly. The OJTSS consultant will also assure that applicable fringe benefits are paid either directly to the trainees or for the trainee into approved plans, funds, or programs.

B. The OJTSS consultant is charged with visiting trainees and monitoring their progress under the OJT Program. To facilitate the on-site visits, the OJTSS consultant will contact contractors for the location of the trainees weekly.

VI. CONTRACTOR'S RESPONSIBILITIES

A. Appoint a company employee to be available and respond to weekly contacts by the OJTSS consultant. OJTSS monitors the status of assigned trainee positions (e.g., program and trainee approvals, trainees' progress, etc.). The OJTSS consultant will contact the individual listed on the company's approved SFN 60226 Request for OJT Trainee Approval. The appointed must reply to communications from the Department and the OJTSS consultant in a timely manner.

B. Take steps to ensure trainees are aware they are formally enrolled in the OJT program.

C. Make trainees available to the OJTSS consultant for at least two on-site visits during the construction season.

D. Identify trainees on the payroll excerpts, for example: "grp. 4 roller operator trainee." This includes trainees in job classifications not covered by DBRA. Handwritten notes are appropriate for identification.

E. Assign each trainee to a particular person–either a supervisor or an employee proficient in the skills to be trained–who shall see that the trainee is given timely, instructional experience. This person must be familiar with the OJT Program, keep proper records, and ensure completion of the required training hours in accordance with the training curriculum.

F. Make the trainer and project superintendent available to the OJTSS consultant for at least two on-site visits each construction season.

G. May notify the Department to "propose graduation" or discontinue the training period of a trainee who has completed 90% or more of their hours and thereafter advance the trainee to journeyworker status.

H. Notify the Department when a trainee completes the number of hours required to graduate from the OJT Program. The Department will issue a certificate of completion and a wallet-sized card to the trainee.

I. May upgrade proficient trainees from one power equipment operator group or truck driver group to another, with the approval of CRD. Fewer hours are required to complete the upgraded position.

The minimum number of hours required will be:

Power Equipment Operator Groups 4-6 to Groups 1-3 = 400 hrs.
Class C Truck Driver to Class B = 200 hrs.
Class B Truck Driver to Class A = 200 hrs.

Depending on the variety of experience the trainee has gained under the previous curriculum, the difference in the hours may be deducted from the actual operation of the piece of equipment or truck. The contractor will need to review the trainee's past performance in order to make this determination.

J. Commercial driver's license (CDL) holders having over-the-road driving experience, with little or no highway construction experience, may be considered to have completed the Class C truck driver training curriculum and, therefore, are eligible to be upgraded to a Class B truck driver trainee, with the approval CRD.

K. May transfer trainees from one project to another in order to complete the OJT Program. If transfers are made, CRD must be notified and provided with the name of the trainer. The training hours will count toward overall OJT Program completion.

L. May use trainees on municipal, private, or other non-highway work and work performed out of state. The training hours will count toward overall OJT Program completion; however, no program reimbursement will be made for those hours. In addition, the hours will be limited to no more than 25% of the total hours required under the training curriculum.

M. Contractors may delegate or reassign trainee positions to subcontractors, with the acceptance of the subcontractors and the approval of CRD. The prime contractor must verify that the trainee will be able to accumulate enough hours to complete his or her training program. If approved, the subcontractor must obtain training program and trainee approval from CRD before the trainee begins work under the OJT program. Program reimbursement will be made directly to the prime contractor. The trainee position will remain the responsibility of the prime contractor.

N. May use trainees on projects subject to TERO requirements as part of the core crew or as part of the skilled labor supplied by the contractor.

O. Contractors may not use one trainee to fill multiple trainee positions. For instance, a subcontractor may not use the same trainee in the same training program to simultaneously fill two or more trainee positions reassigned to them by prime contractors.

P. May use a trainee on a piece of equipment in groups 1-3 or groups 4-6 for one assigned trainee position, then once that trainee has completed the program, the trainee may be trained on a different piece of equipment in groups 1-3 or groups 4-6 to fulfill a second assigned trainee position. When a trainee is used for a second time within a group, the contractor must pay that trainee at the higher wage rate as described in paragraph B under Wage Rates (page 8).

VII. CLASSROOM TRAINING

A. Classroom training may be used to train employees. Each classroom training curriculum must be pre-approved by CRD if the contractor wishes to count the classroom hours as training hours and be reimbursed.

Submit a proposed classroom training curriculum to CRD for approval. Define the type of training the individual will receive, classroom training curriculum, and the minimum number of hours required. The Department will determine the number of hours of credit each trainee will receive toward their training. No retroactive approval will be granted.

B. Contractors will be reimbursed for classroom training hours after the trainee has completed 80 hours of work on highway construction projects.

C. Reimbursement for classroom training will be limited to 60 hours per trainee per construction season. Qualified testing technicians and concrete testing technicians/inspectors will not be included in the 60-hour limit. Reimbursement for classroom training required under the NDDOT Transportation Technician Qualification Program will be at the NDDOT discretion.

D. The minimum wage scale to be used for classroom training will be that of the first federal-aid highway construction project on which the trainee will be employed. If the trainee is already employed on a federal-aid highway construction project, the trainee will be paid in accordance with the minimum wage scale applicable to that project. However, if the first project on which the trainee will be employed is a state funded only contract, the minimum wage scale to be used for the classroom training will be that of the appropriate DBRA wage in effect at the time of award of the state funded contract.

VIII. WAGE RATES

A. In no case shall the minimum wage be less than that of the Group 1 Laborer classification in the federal

DBRA wage rates contained in the contract proposal. A trainee working on a state funded only project, must be paid the DBRA wage rate in effect at the time of award for the type of work the trainee is performing.

B. The minimum wage rates shall not be less than 80% of the journeyworker rate for the first two quarters of training, 85% of the journeyworker rate for the third quarter, and 90% of the journeyworker rate for the fourth quarter.

- Under the power equipment operator training curricula only, once a trainee has completed a training curriculum in either groups 1-3 or groups 4-6, the contractor may enroll the trainee in another training curriculum on a different piece of equipment in either groups 1-3 or groups 4-6.
- The minimum wage rate under the trainee's second program shall not be less than 85% of the journeyworker rate for the first two quarters of training, 90% of the journeyworker rate for the third quarter, and 95% of the journeyworker rate for the fourth quarter.
- For the purpose of the OJT Program, a quarter is 25% of the hours the trainee works toward completion of their approved program. The first two quarters of a 550-hour training curriculum would end after 275 hours, the third quarter after 138 hours, and the fourth after 137 hours.

C. Trainees shall be paid full fringe benefit amounts, where applicable, in accordance to DBRA requirements.

D. At the completion of the OJT Program, the trainee shall receive the wages of a skilled journeyworker.

IX. RECRUITMENT AND SELECTION

A. Trainee Prerequisites:

Trainees must possess basic physical fitness for the work to be performed, dependability, willingness to learn, ability to follow instructions, and an aptitude to maintain a safe work environment.

B. Licenses:

Truck driver trainees must possess appropriate driver permits or licenses for the operation of Class A, B, and C trucks. When an instructional permit is used in lieu of a license, the trainee must be accompanied by an operator who:

1. Holds a license corresponding to the vehicle being operated;
2. Has had at least one year of driving experience; and
3. Is occupying the seat next to the driver.

C. Recruitment:

1. Place notices and posters setting forth the contractor's Equal Employment Opportunity (EEO) Policy and the availability of the OJT Program in areas readily accessible to employees, applicants for employment, and potential employees.
2. Employ members of the targeted group (minority, female, or economically disadvantaged individuals) for all trainee positions assigned in accordance with the OJT Program. Additional positions requested by the contractor may be filled by individuals outside of the targeted groups.
3. Conduct systematic and direct recruitment through public and private employee referral sources.
4. Screen present employees for upgrading to higher skilled crafts. A present employee may qualify as a trainee; however, no work hours will be reimbursed or counted toward program completion prior to training program and trainee approval by CRD.

D. Selection:

1. Hire and enroll OJT trainee candidates who qualify as an individual in the targeted group.
2. Select a training program(s) based on their company's employment/staffing needs.

3. Individuals in the targeted group having experience in the selected curriculum may be eligible to participate in the OJT Program providing they:
    - are not or have not been journeyworkers in the selected curriculum, and/or
    - have not been previously trained in the selected curriculum
4. Non-minority males who are economically disadvantaged must obtain written certification from Job Service North Dakota (JSND) to qualify for the OJT Program. Contractors wishing to hire and enroll economically disadvantaged candidates must provide JSND's certification along with SFN 60226 and the employment application when requesting trainee approval.
    - JSND is the only agency that may certify an individual as economically disadvantaged. If JSND refers the candidate to the contractor, written certification under this category will be provided to the contractor at the time of the interview.
    - Any person wishing to obtain this certification must apply to JSND and complete the Workforce Investment Act Program's Application for Eligibility (SFN 7857). A contractor recruiting a candidate who may qualify must contact the Workforce Investment Act Program Manager at JSND. JSND contacts are also online: http://www.dot.nd.gov/divisions/civilrights/docs/jobservice-workforce-invest-contacts.pdf

X. BASIS OF PAYMENT

A. Contractors will be paid $4.00 for each hour of training in accordance with the OJT Program Manual.

B. Reimbursement will be made directly to the contractor. Complete SFN 51023 Voucher for On-the-Job Training Program Hourly Reimbursement for each trainee. Attach excerpts from the weekly certified payrolls showing the trainee's hours, rate of pay, and how applicable fringe benefits were paid. Excerpts from weekly payrolls are also required for state funded only projects. Vouchers without excerpts from payrolls will not be paid until the excerpts are provided. If the excerpts from the payrolls are not provided within one week, the voucher will not be paid and the trainee's hours will not be credited toward completion. http://www.dot.nd.gov/forms/sfn51023.pdf

C. Submit completed vouchers to CRD for approval and processing by the fifteenth (15th) calendar day of every following month the trainee is employed under the OJT Program.

Regardless, all vouchers for trainee hours worked on state funded only projects from July 1 to June 30 must be received by CRD no later than July 15 in order to be reimbursed. All vouchers for trainee hours worked on federally funded projects from October 1 to September 30 must be received by CRD no later than October 15 in order to be reimbursed. This is due to state and federal end-of-the-year budget fiduciary requirements.

XI. FAILURE TO PROVIDE THE REQUIRED TRAINING OR HIRE THE TRAINEE AS A JOURNEYWORKER

A. No payment shall be made to a contractor for failure to provide the required training or failure to hire the trainee as a journeyworker when such failure is caused by the contractor and evidences a lack of good faith on the part of the contractor in meeting the requirements of this OJT Program Special Provision.

B. If payments have been made, the Department will deduct the amount paid from the contractor's progress payment.

C. A trainee should be hired to begin training as soon as feasible after start of work utilizing the skill involved and remain employed as long as training opportunities exist in the approved work classification or until the trainee has completed his or her training program.

D. It is not required that all trainees be employed for the entire length of the construction season. A contractor will have fulfilled its responsibilities under this OJT Special Provision if it has provided acceptable training to

the number of trainees assigned. The number trained shall be determined on the basis of the total number enrolled for a significant period.

XII. UNFILLED OR INCOMPLETE TRAINEE POSITIONS

A. Provide written explanation for unfilled or incomplete trainee assignments to CRD by October 1 of the current construction season. CRD will decide, on a case-by-case basis, whether to carry the assigned positions over to the next construction season.

B. Positions carried over from the previous construction season must be among the first positions filled at season startup. To notify CRD of the trainee's rehiring, submit *SFN 60226 Request for On-the-Job Trainee Approval*, marking 'Check if Carryover Trainee' in the Approved Training Program section of the form. There is no need for the training position or a returning trainee to be re-approved.

C. Sanctions, up to and including revocation of bidding privileges, may be imposed on the contractor for failure to provide sufficient explanation and documentation for reasons assigned trainee positions when unfilled or incomplete.

XIII. DEFINITIONS

Carryover Position: Incomplete trainee position carried forward from a prior program year.

Carryover Trainee: Trainee scheduled to continue required training hours under an approved training program from a prior program year.

CRD: NDDOT's Civil Rights Division administers the NDDOT On-the-Job Training Program.

Good Faith Efforts: A contractor's documented efforts to fulfill the OJT Program requirements, e.g., a new hires list, examples and locations of advertisements, list of current employees reviewed for skills upgrades, and any other means of demonstrating the contractor's efforts.

Journeyworker: A worker employed in a trade or craft who has attained a level of skill, abilities, and competencies recognized within the industry.

OJT Supportive Services (OJTSS): A consultant under contract with the Department to provide in-person oversight, support, and guidance to contractors and trainees to increase the effectiveness of approved training programs.

Trainee: A person who receives on-the-job training, whether through an apprenticeship program or other program approved or accepted by FHWA.

Trainer/Supervisor: Contractor's employee assigned to mentor, train, supervise, and support a OJT Program trainee.

NORTH DAKOTA DEPARTMENT OF TRANSPORTATION

SPECIAL PROVISION

TEMPORARY EROSION AND SEDIMENT BEST MANAGEMENT PRACTICES

1. GENERAL

Install, maintain and remove appropriate Temporary Best Management Practices (BMPs).

Definitions:

A. **Temporary Erosion and Sediment BMPs** are to be installed and maintained before and during the term of the land disturbance activity. These items are removed when permanent erosion and sediment BMPs are installed.

B. **Permanent Erosion and Sediment BMPs** are to be installed and maintained once the project is completed so that the applicable permits can be terminated.

   In some instances, individual temporary and permanent erosion and sediment BMPs for a site may consist of identical BMPs. In these cases, the temporary erosion and sediment BMPs may be used as the permanent erosion and sediment BMPs if they meet the following criteria:

   1. The BMP was installed correctly,
   2. Is in a functional condition,
   3. Has had all accumulated sediment removed.

C. **The Stormwater Pollution Prevention Plan (SWPPP)** is the document that identifies potential sources of sediment or other pollution from construction activity and ensures practices are used to reduce the contribution of pollutants from construction site runoff.

D. **Contractor Controlled Areas** are areas not included in the contract, but are obtained and solely controlled by the Contractor (e.g., concrete or asphalt batch plants, concrete washout areas, equipment staging yards, material storage areas, excavated material disposal areas, Contractor furnished borrow areas, etc.).

E. **Maintenance** is any action taken to keep a BMP in working condition. These actions may consist of repairing failures of the BMP itself.

F. **Noncompliance** is any action or inaction that violates the regulations imposed by the applicable permits or the requirements of this special provision and other contract documents. Failure of a BMP does not necessarily constitute noncompliance as long as the BMP is repaired, replaced or supplemented within the timelines established in the applicable permits and no sediment is discharged from the site or into a water of the state.

2. CONSTRUCTION REQUIREMENTS

Develop a SWPPP specific to the project. The creation of the SWPPP is a cooperative effort between the NDDOT who creates the project plan sheets and the Contractor who creates a complete SWPPP which incorporates the plan sheets and the Contractor's means and methods. The project plan sheets by themselves do not meet the requirements of a complete SWPPP and should not be considered as such. The Contractor has the flexibility to modify the design and implementation of the temporary erosion and sediment controls to match the Contractor's means and methods and/or field conditions. These changes must be documented in the SWPPP and meet all regulatory requirements.

Obtain appropriate permit coverage for the activities conducted in Contractor Controlled Areas. A permit will be required for these areas regardless of their size. The NDDOT will have no responsibility for these areas.

Install perimeter erosion and sediment BMPs according to the plans/SWPPP prior to site disturbance.

Change the location of temporary erosion and sediment BMPs to fit the field conditions.

Update the SWPPP as work progresses, or as directed by the Engineer. Update the SWPPP to show changes due to revisions in work schedules or sequence of construction. Update the site map to reflect erosion and sediment BMPs that have been installed, changed, or removed.

Do not rely on perimeter BMPs as the sole method of controlling erosion. As the project progresses, install temporary erosion and sediment BMPs within the perimeter BMPs to control erosion resulting from the construction of the project.

Use temporary erosion and sediment BMPs to prevent contamination of adjacent streams or other watercourses, lakes, ponds or other areas of water impoundment.

Coordinate temporary erosion and sediment BMPs with the construction of permanent erosion and sediment BMPs to provide continuous erosion control. Do not install temporary erosion and sediment BMPs when permanent erosion and sediment BMPs are able to be installed. Once the permit is terminated or transferred to the Department, the maintenance of the permanent erosion and sediment BMPs becomes the responsibility of the NDDOT.

Install stabilization BMPs (mulch, seeding and mulch, etc.) in areas that have been disturbed where work has temporarily or permanently ceased following the timelines established in the applicable permits. If implementation of stabilization is precluded by snow cover, undertake such measures as soon as conditions allow.

Maintain the effectiveness of the temporary erosion and sediment BMPs as long as required to contain sediment runoff. Inspect the temporary erosion and sediment BMPs and complete the inspection and maintenance reports every 14 days and within 24 hours of a rainfall event of 0.25 inch or more. During prolonged rainfall (more than 1 day), conduct an inspection within 24 hours of the first day of the event and within 24 hours after the end of the event. Inspections are required only during normal business hours. Install a rain gauge to monitor rainfall amounts as required by the appropriate permit.

Correct any deficiencies in the BMPs within the timelines established in the applicable permits. If conditions do not permit access to the BMP, corrective actions can be taken by installing additional BMPs. Correct the original deficiencies as soon as conditions allow access to their location without causing additional damage to the slopes. In the inspection logs, document the conditions that prohibit access.

Provide copies of all inspections, documentation, record keeping, maintenance, remedial actions, and repairs required by the applicable permits to the Engineer. Provide inspection and maintenance reports within 3 working days after an inspection has been conducted.

Provide immediate written notification to the Engineer of proposed changes to the erosion control plan or SWPPP. The Engineer will review the proposed changes and determine if they are adequate. Documentation of maintenance and inspections that does not affect the erosion control plan or SWPPP does not require approval by the Engineer.

Remove the temporary devices when directed by the Engineer or when permanent erosion and sediment controls are installed.

3. Erosion and Sediment Control Supervisor.

A. General. Designate an erosion and sediment control supervisor. Provide the name and contact information for the supervisor at the preconstruction meeting. If this erosion and sediment control supervisor becomes unavailable on the project, designate a replacement supervisor. Notify the Engineer if this supervisor changes and provide the contact information for the new supervisor.

B. Qualifications. The supervisor shall be:

1. An employee of the Prime Contractor;

2. Familiar with installation, maintenance and removal of BMPs and the requirements of the erosion and sediment control plans, applicable permit requirements, specifications, plans and this provision; and

3. Competent to supervise personnel in erosion and sediment control operations.

C. Duties. The supervisor shall:

1. Provide erosion and sediment control as required by the SWPPP, Plans, and Specifications.

2. Be on the site to supervise the installation, operation, inspection, maintenance, and removal of the erosion and sediment BMPs.

3. Update the SWPPP as work progresses to show changes due to revisions in work schedules or sequence of construction, or as directed by the Engineer. Update the site map to reflect erosion and sediment BMPs that have been installed, changed, or removed.

4. Propose changes to improve erosion and sediment control.

5. Be accessible to the job site within 24-hours.

6. Provide the Engineer with documentation of all erosion and sediment control activities and inspections as required above.

3. PERFORMANCE

Correct all areas of noncompliance within 24 hours after notification of noncompliance. If corrective actions are not taken within 24 hours, the Engineer may:

1. Assess a contract price reduction of $500 per day per instance;

2. Have deficiencies corrected by another Contractor and deduct the cost of the work from the monies due or to become due to the Contractor;

3. Suspend all work; or

4. Withhold payment on other contract items/pay estimates.

These actions will be applied until deficiencies have been corrected.

4. BASIS OF PAYMENT

BMP installation will be paid for at the contract unit price for erosion and sediment control for the appropriate items and sections. The plans will detail the required BMPs for temporary and permanent installations. The same bid items may be used for temporary and permanent BMPs.

BMP items will be measured as specified in the “Method of Measurement” portion of the appropriate section of the specifications.

BMP item removal will be paid for at the contract unit price for “Remove _____”in the appropriate section of the specifications.

Include the costs for labor, materials, maintenance, equipment, disposal, adherence to the permit, and SWPPP modifications in the respective pay items.

When the Engineer directs the replacement of temporary erosion and sediment BMPs that are no longer functional because of deterioration or functional incapacity and those items were installed as specified in the Contract or as directed by the Engineer, the Department will pay for replacement BMPs

No payment will be made for replacing temporary erosion and sediment BMPs that the Engineer determines are ineffective because of improper installation, lack of maintenance, or the Contractor’s failure to pursue timely installation of permanent erosion and sediment BMPs as required in the Contract.

No payment will be made for replacing temporary erosion and sediment BMPs due to contractor operations. Include the cost to move Flotation Silt Curtain as work progresses in the price bid for “Flotation Silt Curtain”.

Erosion and sediment controls for Contractor Controlled Areas are the responsibility of the Contractor and will not be paid for by the Department.

Removal of sediment from silt fence and fiber rolls will be paid for at the price listed in the “Price Schedule PS-1.”

NORTH DAKOTA DEPARTMENT OF TRANSPORTATION

SPECIAL PROVISION

FEDERAL MIGRATORY BIRD TREATY ACT

GENERAL

Work may impact migratory birds or active migratory bird nests. A nest is considered active when it contains eggs or chicks.

Nests are active primarily during the primary breeding season for migratory birds in North Dakota from February 1 to July 15.

All reasonable, prudent, and effective measures should be identified and implemented to avoid take. The definition of take in 50 CFR 10.12 is: to pursue, hunt, shoot, wound, kill, trap, capture, or collect, or attempt to pursue, hunt, shoot, wound, kill, trap, capture, or collect.

PREVENTATIVE MEASURES

General

If no active nests are present at bridges, reinforced concrete box culverts, or structural plate pipes; prevent migratory birds from building new nests and from using nests built in previous years.

Preventative measures include securing tarps, fabric, netting, or wire mesh to the structure to prevent and discourage nesting. Additional measures may include hosing or knocking down any inactive nests or unfinished nests while avoiding take.

Preventative measures may be utilized before, during, and after breeding season.

Collect nests and nest debris and treat as agriculture waste. Disposal can occur by hauling waste to a permitted landfill or on-site when mixed with topsoil uniformly at the rate of 2 tons per acre away from water bodies and runoff.

If a nest where birds are present is found; the Contractor shall have a qualified biologist conduct a bird/nest survey no more than 5 working days prior to starting work at the structure site. A biologist is considered qualified if they have obtained a 4 year degree from an accredited university in a natural sciences field and is employed as an environmental professional.

If active nests are identified, cease construction or demolition and maintain a minimum buffer of 25 feet around active nests to avoid take. The qualified biologist may adjust the buffered distance in coordination with the USFWS. Maintain the buffer as construction resumes until the nests are no longer active.

SURVEY REQUIREMENTS

The USFWS requires that field surveys conducted for nesting birds with the intent of avoiding take include documentation of the presence of migratory birds, eggs, inactive and active nests, along with information regarding the qualifications of the biologists performing the survey, and any avoidance measures implemented at the project site.

If the survey or other available information indicates a potential for take of migratory birds, their eggs, or active nests, contact the USFWS for further coordination on the extent of the impact and the long-term implications of the intended use of the project on migratory bird populations.

Ecological Services
U.S. Fish & Wildlife Service
3425 Miriam Avenue
Bismarck, ND 58501
701-250-4481

BASIS OF PAYMENT

Include the costs for the removal and disposal of nests, the prevention of nesting, and bird/nest surveys in the price bid for the work at the structure site.

Such payment is full compensation for furnishing all materials, equipment, labor, and incidentals to complete the work as specified.

NORTH DAKOTA DEPARTMENT OF TRANSPORTATION

SPECIAL PROVISION

BUY AMERICA

DESCRIPTION

Replace Section 106.08, “Buy America”, with the following:

Buy America.

A. General.

Provide materials from domestic sources when products are permanently incorporated into the work and the products are composed of steel or iron materials.

Ensure all manufacturing processes, including applications of coatings, occur in the United States. A coating includes all processes required to apply the coating to a product to protect or enhance the value of the product.

The requirements of this SP are not applicable to the temporary iron and steel materials, including materials left in place at the Contractor’s convenience.

B. Steel and Iron Certification.

1. General.

All certifications are submitted by the prime Contractor. When submitting certifications for materials that are subject to the requirements of this section, the prime Contractor shall include a signed letter stating that the submitted documentation is the documentation that was received by the prime contractor for the material incorporated into the work.

2. Bulk Manufactured Materials.

In addition to the requirements of Section 106.01 C, “Certificate of Compliance”, submit a manufacturer’s certificate of compliance stating that the iron and steel products listed in Table 1 that are permanently incorporated into the work are of domestic origin.

Table 1

Mailbox supports	Cable Fence Materials
Chain Link Fence Materials	Barbed Wire Fence Materials
Guardrail Components	Woven Wire Fence Materials
Culvert Markers	Delineators
Perforated Tube Sign Supports and Related Materials	

3. Other Steel and Iron Products.

For steel and iron products permanently incorporated into the work that are not listed in Table 1, submit a certificate of compliance as specified in Section 106.01 C, “Certificate of Compliance” and the following information:

a. A signed mill test report.

b. A signed certification from each fabricator and manufacturer that has handled the steel and iron products affirming that all processes performed on the steel and iron products were conducted in the United States.
c. Material descriptions, quantities, and a means of material identification (lot number, bin number, heat number, or factory identification) for each process performed on the steel and iron products.

Each certification shall contain the material identification from all previous fabricators and manufacturers in the process.

C. Foreign or Uncertified Products.

These requirements allow the use of steel and iron products produced and manufactured outside the United States, or products that cannot be certified as originating in the United States, of a total value less than 0.1 percent of the original contract amount, or $2,500, whichever is greater.

The total value is that shown to be the cost of the steel and iron products as delivered to the project site.

Document the cost of:

- Foreign steel and iron products, plus
- Steel and iron products which cannot be certified as originating in the United States.

Submit the documentation of foreign and uncertified products with the certifications required in Section B, “Steel and Iron Certification” of this SP.

NORTH DAKOTA DEPARTMENT OF TRANSPORTATION

SPECIAL PROVISION

CERTIFICATE OF COMPLIANCE (CoC)

DESCRIPTION

Section 106.01 C, “Certificate of Compliance” is no longer valid. Use this Special Provision in place of that section.

Certificate of Compliance

A Certificate of Compliance (CoC) states that the materials represented by the CoC comply with the contract requirements.

All materials manufactured off-site require either a Manufacturer or Contractor CoC. Materials listed in Table 1 require a Manufacturer CoC. All other materials require a Contractor CoC.

Submit a CoC before incorporating the material into the work. Submit CoC’s electronically. Some materials require the submission of additional information as part of the CoC. When this is required, the contract documents will state the additional requirements.

The Department will not include quantities of material represented by a CoC on a progressive estimate until the Contractor has fully met the CoC requirements.

The Department may sample, test, and inspect material represented by a CoC at any time before project acceptance, and will accept or reject materials based on inspections or test results.

A. Manufacturer Certificate of Compliance.

A Manufacturer CoC requires the signature of a person having the legal authority to act for the material manufacturer. The manufacturer and prime contractor must sign the Manufacturer CoC.

Provide Manufacturer CoC for the products shown in Table 1. The entity batching Portland Cement Concrete is considered the manufacturer.

Table 1
Manufacturer Certificates of Compliance

Section	Item
604	Prestressed Concrete Beams
606	Precast Reinforced Concrete Box Culverts
802	Portland Cement Concrete
804	Cement (excluding Section 802) and Lime
820	Fly Ash (excluding Section 802)
830	Pipe and Drainage Structures
834	Structural Steel
836	Reinforcing Steel, Dowel Bars, and Tie Bars
840	Piling
846	Preservatives and Pressure Treatment

Table 1
Manufacturer Certificates of Compliance

	Process for Timber
858	Geosynthetics

Submit Manufacturer CoC using the form *Manufacturer Certificate of Compliance (SFN 61041)*.

B. Contractor Certificate of Compliance.
A Contractor CoC requires the signature of a person having the legal authority to act for the prime Contractor. The prime Contractor may require the manufacturer, supplier, or subcontractor to sign the Contractor CoC.

Submit Contractor CoC using the form *Contractor Certificate of Compliance (SFN 61040)*.

NORTH DAKOTA DEPARTMENT OF TRANSPORTATION

SPECIAL PROVISION

RAILROAD REQUIRMENTS

Projects: NHU-3-019(044)155 – PCN 17505
NHU-3-020(074)103 – PCN 17504

DESCRIPTION

This Special Provision incorporates the Construction and Maintenance Agreement entered into by and between the North Dakota Department of Transportation and the Burlington Northern and Santa Fe Railway Company (BNSF).

Bidders shall become familiar with all the provisions of the agreement and submit their bid for the construction of this Project based on a plan for construction which will meet all conditions of the agreement.

Fulfill all the applicable requirements and comply with all the terms and conditions as contained in the Construction and Maintenance Agreement attached hereto.

Coordinate all flagging activities with BNSF's Roadmaster. Submit a weekly schedule of work activities and documentation of all discussions with BNSF's Roadmaster coordinating flagging activities to the Project Engineer. If the Contractor fails to coordinate flagging activities and provide the required documentation, the Contractor will pay for flagging deemed unnecessary by the Department.

The Department will make the payments to the Railroad for all flagging. Monies due from the Contractor for unnecessary flagging will be withheld from money owed the Contractor on this project or future projects.

(Construction and Maintenance Agreement with BNSF attached.)

This document was originally issued and sealed by Chad A. Petersen, Registration Number PE-4884, on 08/15/16 and the original document is stored at the North Dakota Department of Transportation

NDDOT Contract No. 3816 0712

NDDOT ORIGINAL

North Dakota Department of Transportation
CONSTRUCTION AND MAINTENANCE AGREEMENT

Project: NHU-3-020(074)103, PCN 17504

NDDOT Bridge No. 020-103.403
BNSF Railway over ND Highway 20 (College Drive) in Devils Lake, ND

This agreement is between the state of North Dakota, acting by and through its Director of Transportation, hereinafter referred to as NDDOT, whose address is 608 East Boulevard Avenue, Bismarck, North Dakota 58505-0700, and BNSF Railway Company, hereinafter referred to as the Railroad, whose address is 80 - 44th Avenue NE, Minneapolis, Minnesota 55421

WITNESSETH:

WHEREAS, NDDOT and City are planning to replace the existing highway underpass, NDDOT Bridge 020-103.403 (Project), which carries two BNSF railroad tracks over ND Highway 20 (College Drive) in Devils Lake, North Dakota, and

WHEREAS, the parties desire the Project to be constructed in accordance with plans and specifications to be prepared by NDDOT, and

WHEREAS, in connection with the bridge construction, NDDOT will require permanent and temporary easements of the Railroad's right of way for highway purposes, and

WHEREAS, the permanent easements are necessary to construct the bridge and retaining walls necessary to accommodate the highway construction, maintenance, and use, and

WHEREAS, the temporary easements are necessary to accommodate contractor staging and structure construction, and

WHEREAS, NDDOT will undertake the construction of said Project, using federal funds, the Railroad will accept the execution of NDDOT's Project upon the terms and conditions herein stated, and

NOW, THEREFORE, in consideration of the premises and the mutual dependent promises hereafter contained, the parties agree as follows:

I.

The Railroad, by signature of this agreement, approves of the proposed bridge plan as shown on Exhibit A1, attached hereto and made a part hereof. The Railroad shall grant to NDDOT by separate instrument, and at a price to be agreed upon between the parties, a permanent and temporary easement for the necessary right-of-way for the construction and maintenance of roadway and structure as shown on said Exhibit A2. After the project is complete, the permanent easement shall be transferred to the NDDOT.

NDDOT will design the bridge such that a future third track bridge could be constructed adjacent to the south side of the bridge.

II.

NDDOT shall submit to Railroad prior to the commencement of any work, plans and specifications of the work to be done on Railroad's right-of-way. No work shall be commenced on Railroad's right-of-way before the easement is acquired by the NDDOT and City and a notice to proceed is given by Railroad's Manager, Public Projects, to NDDOT.

Nothing provided in this agreement with respect to plans and specifications shall be construed or deemed to be a ratification or an adoption by Railroad of plans and specifications as its own.

III.

NDDOT (by its contractors) and Railroad shall perform the various items of work to the satisfaction of the Railroad and in accordance with the plans and specifications as agreed to by Railroad and NDDOT:

A. WORK TO BE PERFORMED BY NDDOT OR ITS CONTRACTOR AT EXPENSE OF NDDOT.

1. Except as provided by this agreement, furnish all plans, engineering supervision (including construction surveying), labor, materials, supplies, and equipment necessary to complete the Project.

2. Remove the existing bridge, roadway and utilities and construct the new bridge, roadway and utilities as shown on the plans in Appendix A.

3. Construct the temporary shoofly bridge and grading for the shoofly alignment. After returning rail traffic to the existing alignment on the bridge, remove the temporary shoofly bridge and restore the shoofly alignment to pre-project conditions.

4. Perform all other work not specifically mentioned as work to be performed by the Railroad or City, necessary to complete the Project in accordance with the plans and specifications.

5. Coordinate all work with the Railroad's Roadmaster. Phone number is provided in the plans.

6. Comply with Exhibit E (Non-discrimination clauses) and Railroad safety requirements as specified in Exhibits B and C.

B. WORK TO BE PERFORMED BY RAILROAD

1. Provide flagging for the work of NDDOT or its contractor at the expense of NDDOT as specified in Exhibit D and G.

2. Place and remove all ballast, track, signing and signals needed to temporarily

relocate the train track alignment to the shoofly alignment and bridge between the dates of September 11, 2017 and November 4, 2017 at the expense of NDDOT as specified in Exhibit G.

3. Furnish engineering and inspection as required in connection with the construction of the Project as specified in Exhibit G.

4. If a suitable and safe location exists and the contractor needs a temporary construction crossing across the existing tracks, the location and the cost of the crossing shall be agreed upon by the contractor and the Railroad and an appropriate construction crossing agreement shall be entered into. The Railroad shall install and remove the temporary construction crossing and furnish all materials necessary to provide for such crossing, all at the expense of the NDDOT contractor.

5. The estimated cost of various items of work to be performed by Railroad under this agreement is shown on the estimate attached hereto and marked Exhibit G. All costs incurred by Railroad are subject to Federal aid and shall meet the requirements of the NDDOT.

C. Future Widening of the Railroad Overpass

Upon request by the Railroad, and accompanied by a need due to the demand and plans to the installation of a third track within a reasonable time, the NDDOT will widen the new overpass to accommodate a third mainline track.

The NDDOT agrees to pay 100% of the costs associated with widening the overpass to accommodate a third track.

The design of the overpass has considered the potential for future expansion. The footprint of each pier and abutment has been determined so that the space required for future expansion will be "reserved" in the median and gore areas between the ramps and mainline. Abutments, pier footings, and pier caps are detailed for ease of future expansion of the overpass.

The actual construction to expand the overpass to three tracks would proceed with typical construction methods. The construction operations would take place within 25 foot foul zone of the north track, so the contractors operations would be limited to those periods between train operations on the existing north track. Most construction activities would be more than 25 feet away from railroad operations on the south track.

Construction activities would proceed on the following schedule:

1. After the pavement of the median barriers are removed, the contractor will drive the piling for the piers and the abutments. The new footings will be tied to the existing footing through splicing with the existing reinforcement or with anchor dowels.

2. Upon completion of the footings, the third pier column will be constructed to match the existing column.

3. In order to construct the pier caps and place the superstructure, the concrete fascia beams must be removed. A temporary ballast restrainer would be placed on the north side of the north track and the fascia beams removed.

4. The pier caps and abutment would then be constructed with full connection to the existing caps and abutment similar to the footing connections.

5. The new deck girders and steel deck pan would then be installed.

6. The fascia beams would then be reinstalled with the railing replaced.

7. Ballast and track would then be installed by Railroad forces.

If the Railroad increases its operations to a point where a third track is needed and expansion is required, construction of the widening will begin within 12 months after BNSF has made the request, and the Department agrees that there is a demand and a new track installation plan. The 12 months start time is contingent upon the Department obtaining all necessary right of way permits and agreements.

IV.

All work to be done by NDDOT or its contractor on Railroad's right-of-way or in the vicinity of Railroad's tracks shall be done in a manner satisfactory to Railroad and shall be performed at such a time and in such manner as not to interfere unnecessarily with the movement of trains or traffic upon the tracks of Railroad. NDDOT will require its contractor to use all care and precaution necessary to avoid accident or damage to, or interference with, Railroad's tracks or trains, and to notify Railroad's engineer 30 days in advance whenever the contractor is about to perform work on or adjacent to Railroad's right of way and tracks to enable Railroad to furnish flagging and such other protective services and devices as in Railroad's judgment may be necessary to ensure safety of railroad operation. Wherever safeguarding of trains or traffic of railroad is mentioned in this agreement, it is intended to cover and include all users of Railroad's tracks having permission for such use.

NDDOT will reimburse Railroad directly for all costs incurred for flagging and other protective services/devices furnished. Bills for flagging and other protective services and devices ascertained in accordance with the provisions of 23 CFR 646-B and 23 CFR 140-I and other pertinent instructions issued by the Federal Highway Administration, Department of Transportation, will be submitted by Railroad to NDDOT.

If Railroad enters into a contract or agreement with a contractor to perform any of the work which railroad is required to perform under the terms of this agreement by reason of the construction of NDDOT's project, Railroad, for itself, its assigns, and successors in interest, agrees that it will not discriminate in the choice of contractors and will include all non-discrimination provisions set forth in Exhibit E, attached hereto and made a part hereof.

Railroad will submit complete billing for flagging and other protective services and devices within one hundred twenty (120) days after completion of the Project. NDDOT will review all billings and pay all accepted billings within 90 days from the date the billing is received by the NDDOT.

Attached Exhibit D is a statement of conditions when flagmen and other services and devices will be furnished by Railroad, attached hereto and made a part hereof.

V.

Pre-award audits will be required by NDDOT on all contracts in excess of $50,000, and may be required in other instances.

A commercial contractor will be audited by NDDOT to ensure compliance with applicable laws and regulations. The financial value of the contract is not a deciding factor on this type of audit.

VI.

NDDOT shall require that should the contractor in any way interfere with Railroad operations or damage property during construction operations over Railroad's tracks and right-of-way, the contractor shall stop his work to allow the Railroad to investigate and make necessary repairs at contractors' sole cost and expense. No work will proceed until authorized by the Railroad.

VII.

The Contractor, for work on or adjacent to the Railroad right-of-way, will indemnify and hold harmless the Railroad and any other railroad company occupying or using the Railroad's right-of-way or line of railroad against all loss, liability, and damage arising from activities of the Contractor, its forces or any of its subcontractors or agents, and will further provide the following insurance coverages:

A. Before commencing any work under this agreement, Contractor must provide and maintain in effect insurance, at Contractor's expense, covering all of the work and services to be performed hereunder by the Contractor and each of its subcontractors, as described below.

   1. Worker's Compensations coverage is as required by state law. If the Contractor is not covered by the North Dakota Workers Comp Act, the Contractor shall provide employers liability policy. The certificate for this policy must contain a specific waiver of the insurance company's subrogation rights against the BNSF Railway Company.

   2. Commercial general liability insurance covering liability, including but not limited to public liability, personal injury and property damage, with coverage of at least $2,000,000 per occurrence and $6,000,000 in the aggregate. Where explosion, collapse, or underground hazards are involved, the X, C and U exclusions in Marsh policy must be removed. If a different carrier is used, the policy must also address these requirements. See Exhibit F concerning limited seepage, pollution, and contamination coverage.

   3. Automobile liability insurance, including bodily injury and property damage, with coverage of at least $1,000,000 combined single limit or the equivalent.

   4. Contractual liability insurance covering all of the liability assumed by the Contractor under the provisions of this agreement, with coverage of at least $2,000,000 combined single limit or the equivalent.

5. Railroad protective liability insurance stating the BNSF Railway Company is the named insured covering all of the liability assumed by the Contractor under the provisions of this agreement with coverage of at least $5,000,000 per occurrence and $10,000,000 in the aggregate.

All insurance shall be placed with insurance companies licensed to do business in the states in which the work is to be performed, and with current Best's Insurance Guide Ratings of A and Class X, or better.

If any work is to be performed within 50 feet of a railroad track, then insurance must provide coverage of incidents occurring within fifty (50) feet of a railroad track, and any provision to the contrary in the insurance policy must be specifically deleted.

In all cases, the certificate must specifically state that BNSF Railway Company is an additional insured.

Any coverage afforded Railroad, the Certificate Holder, as an additional insured shall apply as primary and not excess to any insurance issued in the name of the Railroad.

B. Before commencing any work hereunder, the Contractor shall furnish to Railroad, and the Railroad will approve, Certificate of Insurance on the form prescribed by Railroad, evidencing the issuance to the Contractor of the policies of insurance providing the types of insurance and limits of liability prescribed above, and certifying that the Railroad shall be given not less than 30 days written notice prior to any material change, substitution or cancellation prior to normal expiration dates. Cancellation or expiration of any of said policies of insurance shall not preclude Railroad from recovery there under for any liability arising under this agreement.

C. It is mutually understood and agreed that the purchase of insurance as herein provided shall not in any way limit the liability of the Contractor to Railroad, as herein set forth.

The following information must appear on the Certificate of Insurance to identify the project policy is issued to cover:

Project: BNSF Railway Bridge over ND Highway 20 (College Drive) in Devils Lake, ND

Contractor:

Name:
Address:
Telephone Number:

BNSF Railway:

Railroad protective insurance may be obtained from:

MARSH
(214) 303-8519

Certificate of Insurance should be sent to:

BNSF Manager of Public Projects
80-44th Avenue NE
Minneapolis MN 55421
(763) 782-3492

VIII.

The Railroad agrees to observe and comply with all Federal and State laws.

IX.

Upon completion of the items of work, NDDOT shall require its Contractor to leave the Railroad right-of-way in a condition satisfactory to the Railroad.

X.

Upon completion of the Project, neither party shall do or permit anything to be done to reduce the horizontal or vertical clearances provided by plans; provided, however, that the Railroad reserves the right to make such ballast raises to its existing and future tracks as may be justified, and further reserves the right to make changes or additions to its facilities within the limit of the overpass. In the event any changes in, or additions to the tracks or other facilities of the Railroad, NDDOT, or City are made in the future, the usefulness of the overpass for the purpose of grade separation shall not be impaired.

XI.

NDDOT shall own, maintain, repair, and reconstruct, as necessary and at its own expense, the railroad overpass bridge structure; excluding rail, ballast, ties and the railroad approaches to the bridge structure which will be owned by the Railroad. NDDOT agrees that, prior to commencement of any such work of maintenance, repair, or reconstruction; it will furnish the Railroad details of the proposed work and description of the manner in which the work is to be performed. NDDOT further agrees, with respect to such maintenance, repair, or reconstruction, that it will:

A. Comply and cause its contractor to comply with all obligations assumed or to be assumed by NDDOT and/or its contractor in connection with the original construction of the railroad overpass; and

B. Furnish or cause its contractor to furnish to the Railroad a Right of Entry Agreement and a Railroad Protective Policy in the form and the amount then required by the Railroad, said policy to be executed by a corporation qualified in North Dakota, and

C. Require its contractor to carry regular contractor's public liability and property damage insurance as then specified by NDDOT Spec. 107.14 or any subsequent NDDOT

specification for limits equal to those then required of public contractors performing work under contract with NDDOT; and

D. Reimburse the Railroad for all costs and expenses related to the maintenance or reconstruction of the structure incurred by the Railroad in connection with such maintenance, repair, or reconstruction.

XII.

In the event the underpass shall cease to be used for highway purposes, the NDDOT shall notify the Railroad of such abandonment, and at NDDOT's expense, remove the overpass and approaches located upon the property of the Railroad except and unless it is mutually agreed, within 120 days following NDDOT's notification of abandonment, that portions of all the overpass and approaches are to be left in place. Removal and cleaning up of the Railroad's property shall be done to the satisfaction of the Railroad.

XIII.

Other Agreements. This agreement shall supersede any and all other agreements, arrangements, or understandings between the signatory jurisdictions covering, in whole or in part, any of the matters covered in this agreement.

XIV.

This agreement shall be for the benefit of and be binding upon the parties hereto, their successors, and assigns.

Executed by BNSF Railway Company, the date last signed below.

WITNESS:

GREGORY DUNAWAY
NAME (TYPE OR PRINT)

G. E. Dunaway
SIGNATURE

THE BNSF
RAILWAY COMPANY

STEVE ANDERSON
OFFICERS NAME (TYPE OR PRINT)

Steve Anderson
SIGNATURE

V.P. ENGINEERING
TITLE

5/20/16
DATE

Executed by the North Dakota Department of Transportation, the date last signed below.

WITNESS:

Sondra Goebel
(TYPE OR PRINT)

Sandra Goebel
SIGNATURE

NORTH DAKOTA DEPARTMENT OF
TRANSPORTATION

Grant Levi
DIRECTOR (TYPE OR PRINT)

Grant Levi
SIGNATURE

6/2/16
DATE

APPROVED AS TO SUBSTANCE BY:

Terrence R. Udland
BRIDGE ENGINEER (TYPE OR PRINT)

Terrence R. Udland
SIGNATURE

5/27/16
DATE

APPROVED as to execution this
31 day of May 2016
ATTORNEY GENERAL
By
SPECIAL ASST. ATTORNEY GENERAL

Exhibit A1

STATE	PROJECT NO.	SECTION NO.	SHEET NO.
ND	NHU-3-020(074)103	4	3

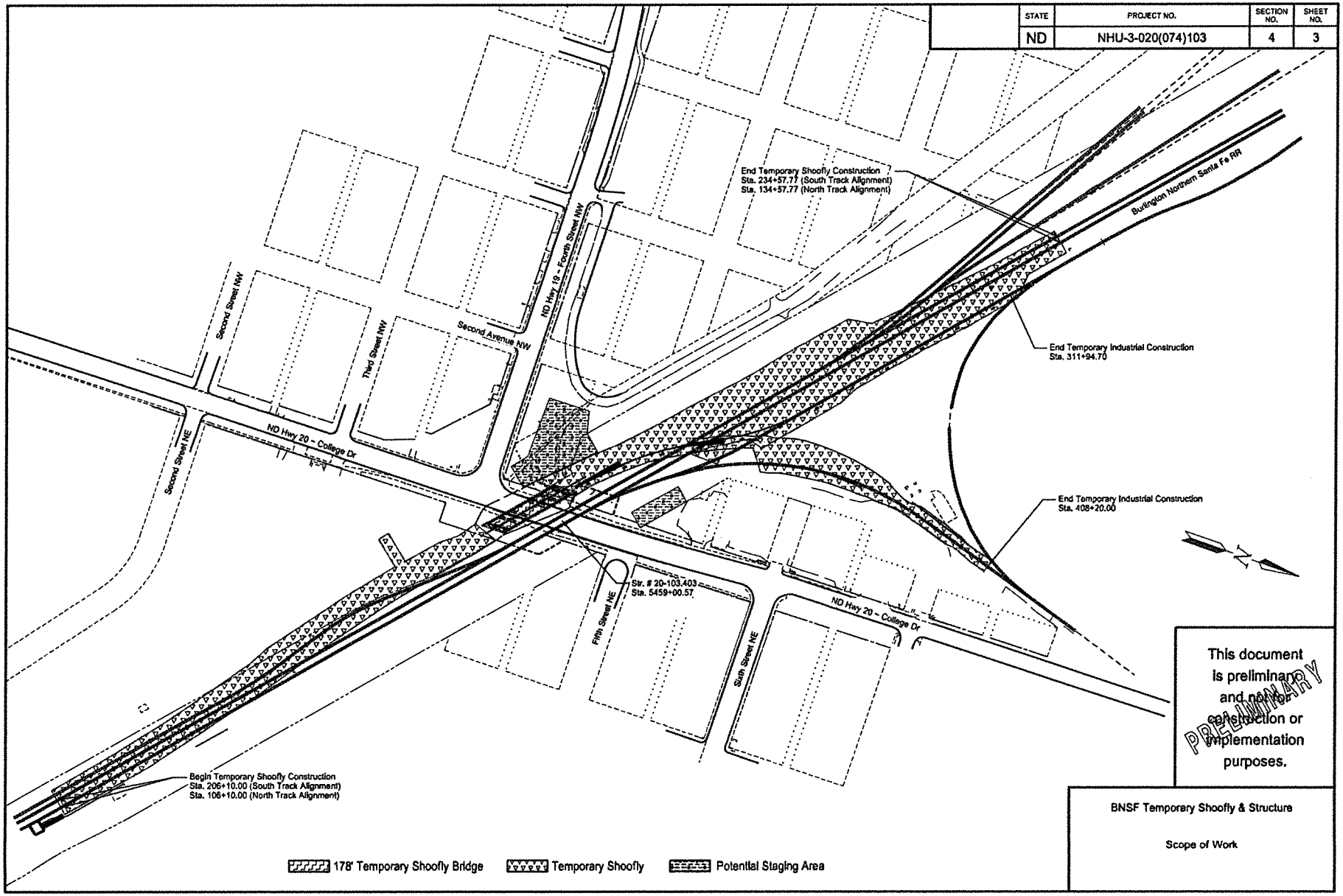

This document is preliminary and not for construction or implementation purposes.

PRELIMINARY

BNSF Temporary Shoofly & Structure

Scope of Work

4/14/2016 9:09:09 AM mark.bldolt J:\trans\5211102\CADD\30020103.074\Design\Plans - ML\001\004SW_003.dgn

Exhibit A2

STATE	PROJECT NO.	SECTION NO.	SHEET NO.
ND	NHU-3-020(074)103	4	4

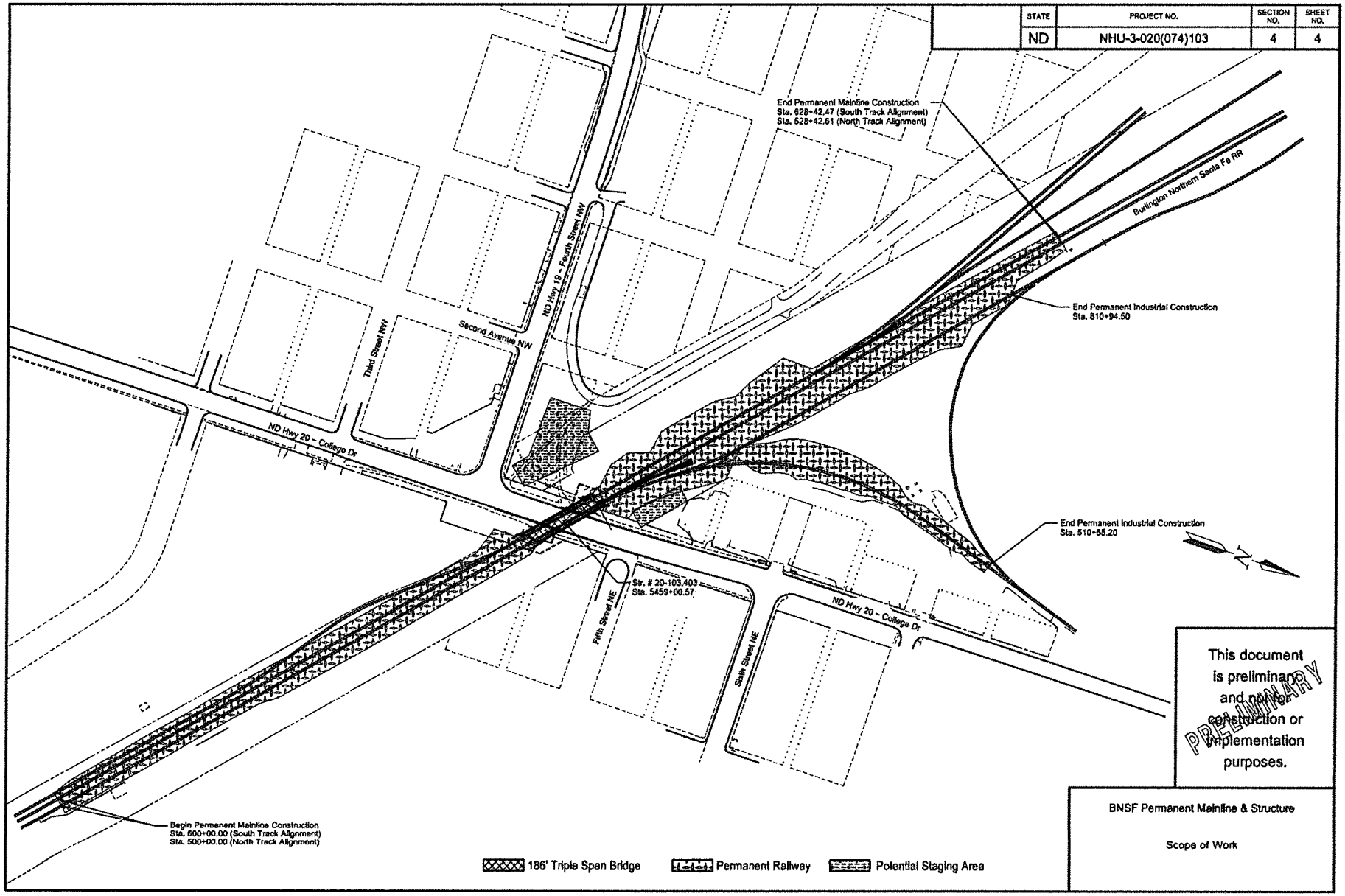

This document is preliminary and not for construction or implementation purposes.

PRELIMINARY

BNSF Permanent Mainline & Structure

Scope of Work

4/14/2016 8:09:11 AM markloddolt J:\trans\5211102\CADD\30020103.074\Design\Plans - ML\001\004SW_004.dgn

Exhibit A3

BRIDGE CODE		STATE	PROJECT NUMBER	SECTION NO.	SHEET NO.
X631		ND	NHU-3-020(074)103	170	1

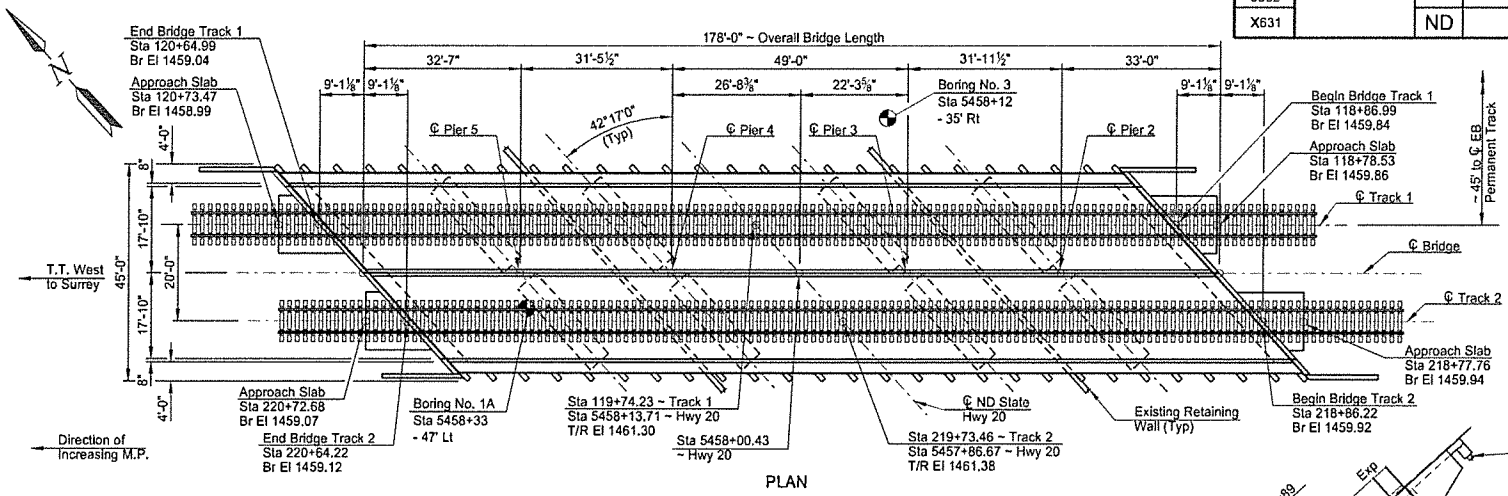

PLAN

DESIGN STRENGTHS:

f'b = 1,215 psi ~ Southern Pine No. 1
f'c = 4,000 psi ~ Precast Concrete
fy = 50,000 psi ~ Structural Steel
fy = 60,000 psi ~ Reinforcing Steel

Allowable Stress Design

BRIDGE BID ITEMS

SPEC	CODE	ITEM DESCRIPTION	UNIT	QUANTITY
210	0101	CLASS 1 EXCAVATION	L SUM	1
210	0200	SELECT BACKFILL	CY	84.3
210	0201	FOUNDATION PREPARATION	EA	1
602	1134	PILE SUPPORTED APPROACH SLAB	SY	51.2
602	6001	PRECAST PIER CAP	EA	8
602	6002	PRECAST ABUTMENT	EA	4
602	6005	PRECAST CONCRETE WING WALL	EA	4
616	5890	STRUCTURAL STEEL	L SUM	1
618	0115	UNTREATED TIMBER	MBM	51.7
622	0068	STEEL PILING HP 14 X 89	LF	8,120
624	0124	PEDESTRIAN FENCE	LF	351
930	7012	ROADWAY CANOPY	L SUM	1

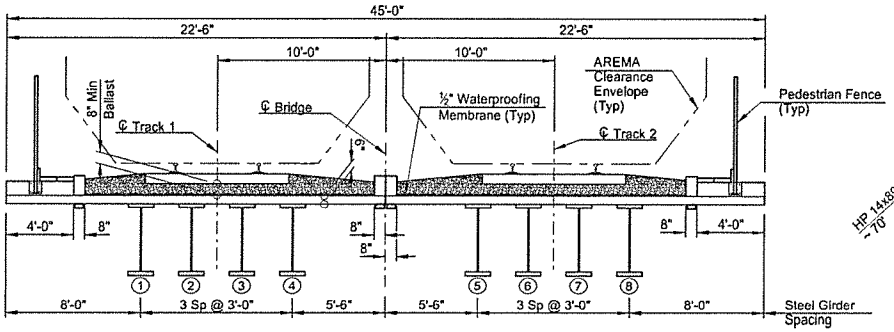

TYPICAL SECTION

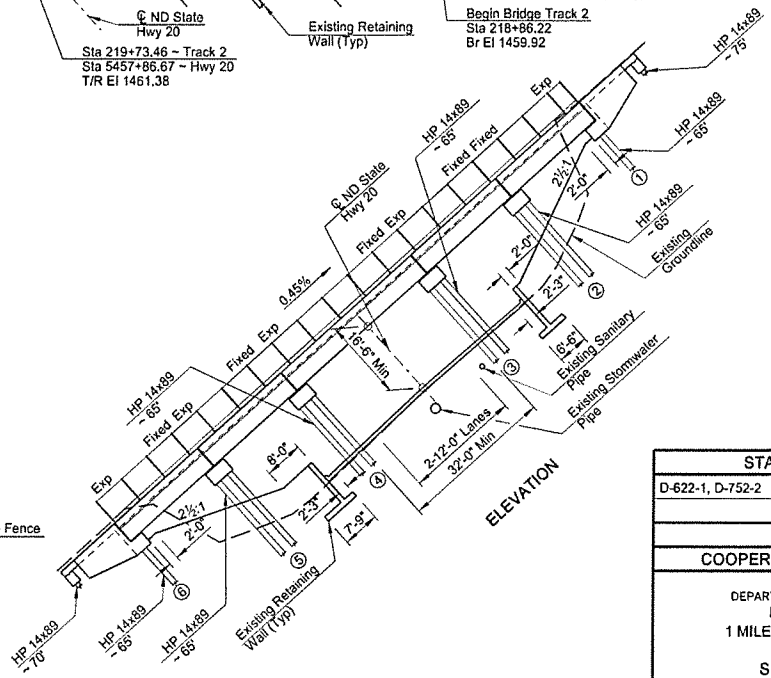

This drawing is preliminary and not for construction or implementation purposes.

PRELIMINARY

STANDARD DRAWINGS
D-622-1, D-752-2

COOPER E80 OR 100 KIP (4 AXLE)

NORTH DAKOTA
DEPARTMENT OF TRANSPORTATION
BN & CP RAILWAY
1 MILE NORTH JUNCTION US 2

SHOOFLY LAYOUT
BNSF Ry. Br.0033-0085.600
PROJECT: NHU-3-020(074)103
STATION: 5458+00.43
RAMSEY COUNTY

DATE BRIDGE ENGINEER

SURVEY CONTROL POINTS			
POINT	NORTHING	EASTING	ELEVATION
4	410064.3380	2367815.0500	1445.3140
20	409786.0080	2368197.0630	1442.4510

Exhibit A4

BRIDGE CODE		STATE	PROJECT NUMBER	SECTION NO.	SHEET NO.
X631		ND	NHU-3-020(074)103	170	27

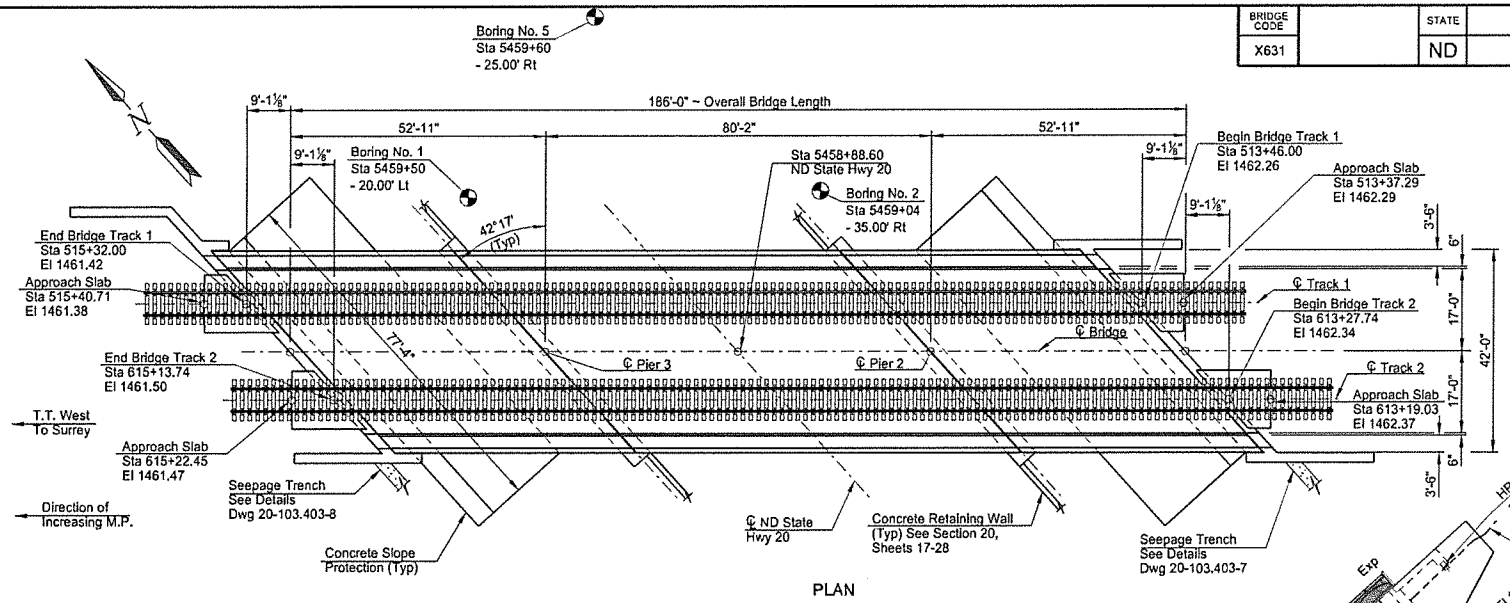

PLAN

DESIGN STRENGTHS:

f'c = 4,000 psi ~ Class AAE-3 Concrete
f'c = 5,000 psi ~ Prestressed Concrete Fascia Girder
fy = 60,000 psi ~ Reinforcing Steel
fy = 50,000 psi ~ Structural Steel

Allowable Stress Design

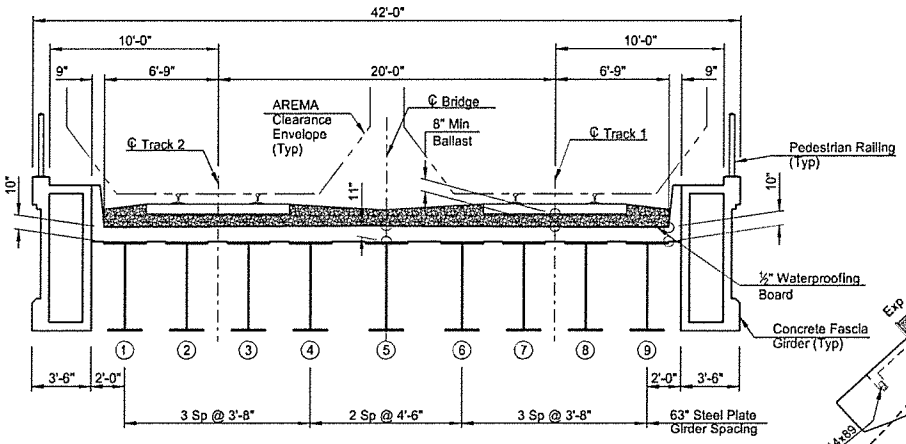

TYPICAL SECTION

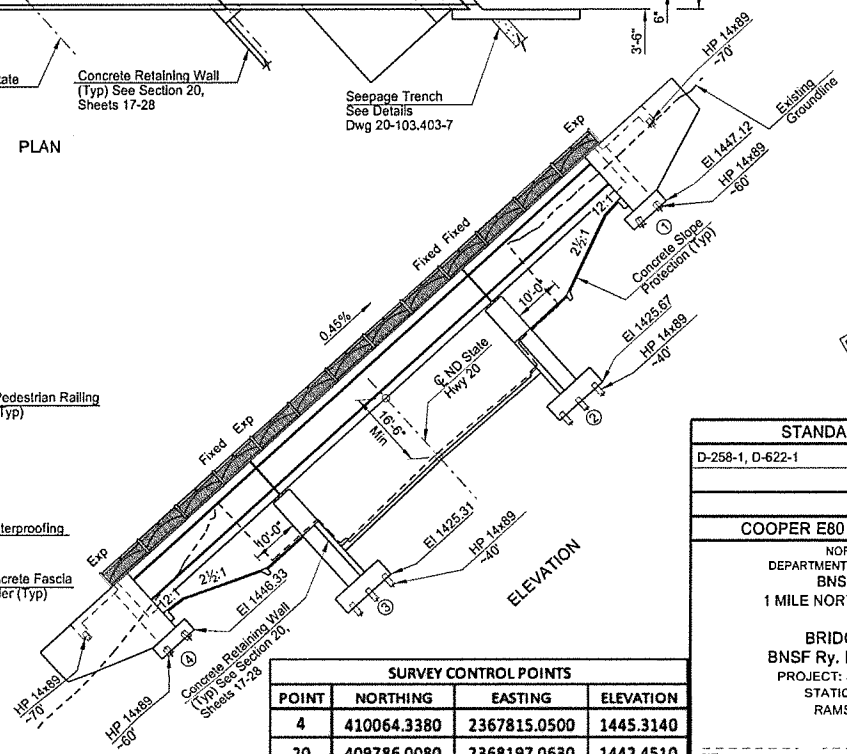

ELEVATION

This drawing is preliminary and not for construction or implementation purposes.

PRELIMINARY

SURVEY CONTROL POINTS			
POINT	NORTHING	EASTING	ELEVATION
4	410064.3380	2367815.0500	1445.3140
20	409786.0080	2368197.0630	1442.4510

STANDARD DRAWINGS
D-258-1, D-622-1
COOPER E80 OR 100KIP (4 AXLE)

NORTH DAKOTA
DEPARTMENT OF TRANSPORTATION
BNSF RAILWAY
1 MILE NORTH JUNCTION US 2

BRIDGE LAYOUT
BNSF Ry. Br.0033-0085.600
PROJECT: NHU-3-020(074)103
STATION: 5458+88.60
RAMSEY COUNTY

DATE BRIDGE ENGINEER

Exhibit A5

PROJECT NO.	PCN	PARCEL	PLAT NO.	SUPPLEMENTS
NHU-3-020(074)	17504	4-1	4 of 6	Two
MILE 103		4-4		

Parcel 4-1, 4-2, & 4-3 MODIFIED on 03-15-2016 [JN]
Parcel 4-5 DELETED on 03-15-2016 [JN]

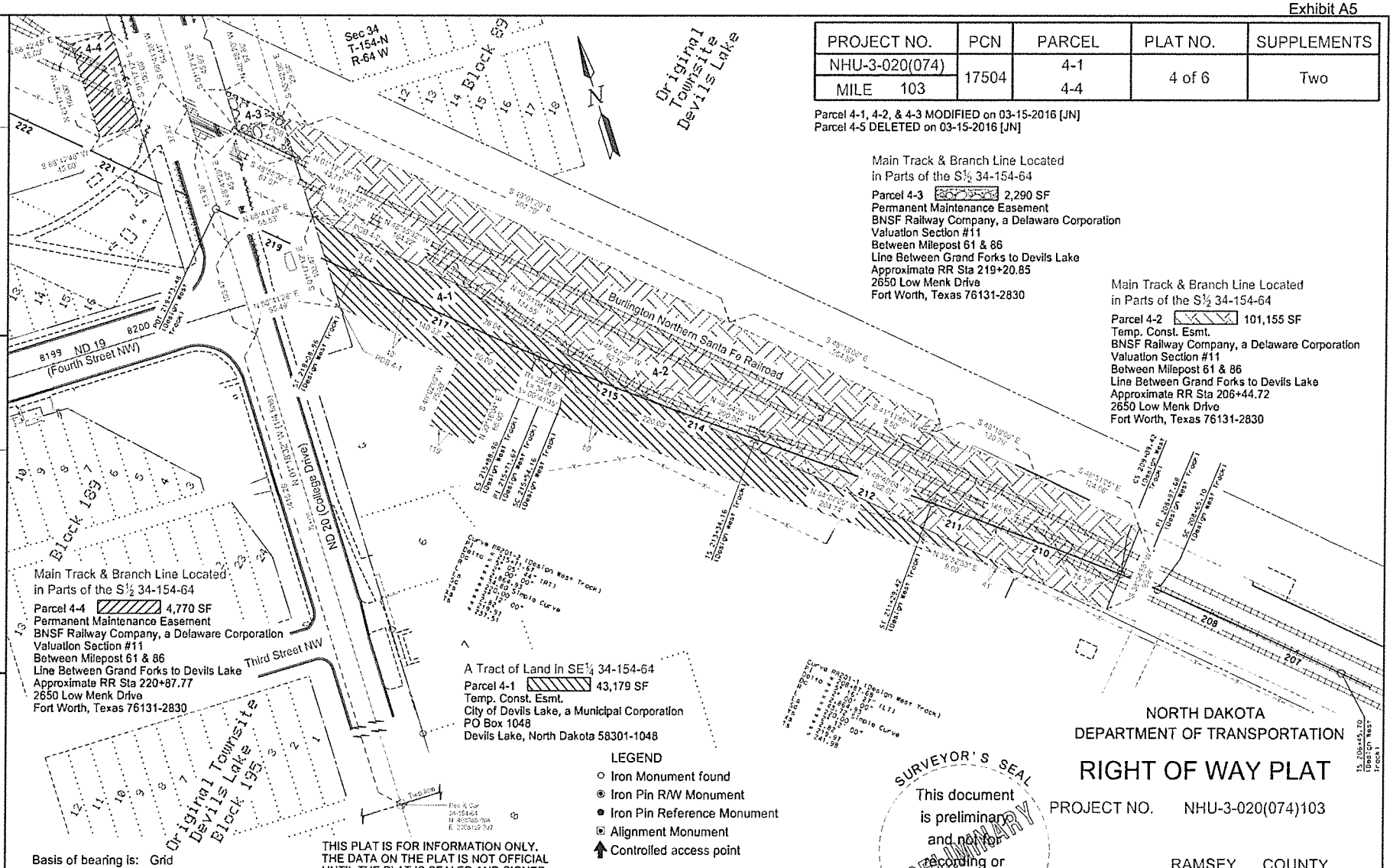

Main Track & Branch Line Located
in Parts of the S½ 34-154-64
Parcel 4-3 2,290 SF
Permanent Maintenance Easement
BNSF Railway Company, a Delaware Corporation
Valuation Section #11
Between Milepost 61 & 86
Line Between Grand Forks to Devils Lake
Approximate RR Sta 219+20.85
2650 Low Menk Drive
Fort Worth, Texas 76131-2830

Main Track & Branch Line Located
in Parts of the S½ 34-154-64
Parcel 4-2 101,155 SF
Temp. Const. Esmt.
BNSF Railway Company, a Delaware Corporation
Valuation Section #11
Between Milepost 61 & 86
Line Between Grand Forks to Devils Lake
Approximate RR Sta 206+44.72
2650 Low Menk Drive
Fort Worth, Texas 76131-2830

Main Track & Branch Line Located
in Parts of the S½ 34-154-64
Parcel 4-4 4,770 SF
Permanent Maintenance Easement
BNSF Railway Company, a Delaware Corporation
Valuation Section #11
Between Milepost 61 & 86
Line Between Grand Forks to Devils Lake
Approximate RR Sta 220+87.77
2650 Low Menk Drive
Fort Worth, Texas 76131-2830

A Tract of Land in SE¼ 34-154-64
Parcel 4-1 43,179 SF
Temp. Const. Esmt.
City of Devils Lake, a Municipal Corporation
PO Box 1048
Devils Lake, North Dakota 58301-1048

LEGEND
- Iron Monument found
- Iron Pin R/W Monument
- Iron Pin Reference Monument
- Alignment Monument
- Controlled access point

GRAPHIC SCALE (in feet)
0 100 200 300
1" = 100'

SURVEYOR'S SEAL
This document is preliminary and not for recording or implementation purposes.
PRELIMINARY

NORTH DAKOTA
DEPARTMENT OF TRANSPORTATION

RIGHT OF WAY PLAT

PROJECT NO. NHU-3-020(074)103

RAMSEY COUNTY

APPROVED _____

DATE _____

Basis of bearing is: Grid

THIS PLAT IS FOR INFORMATION ONLY. THE DATA ON THE PLAT IS NOT OFFICIAL UNTIL THE PLAT IS SEALED AND SIGNED BY A REGISTERED LAND SURVEYOR.

[x] All coordinates on this sheet are Ramsey County ground coordinates. They are derived from the "North Dakota Coordinate System of 1983", NAD83 (CORS). North Zone Combination Factor (cf) = 0.9998685 (International Foot)

[ ] Assumed Coordinates

DATE SURVEY WAS COMPLETED: 09/14/2014 | PLAT MADE BY: James Nelson | DATE: 08/10/2015 | CHECKED BY L.S.: Brian R. Heath | DATE: 03/01/2016

4/4/2016 9:36:33 AM jamesnelson J:\Trans\5211102\CADD\30020103.074\ROW\195RW_005_RP.dgn

Exhibit A6

PROJECT NO.	PCN	PARCEL	PLAT NO.	SUPPLEMENTS
NHU-3-020(074)	17504	4A-1	4A of 6	One
MILE 103		4A-2		

Parcel 4A-1 & 4A-2 ADDED on 03-15-2016 [JN]

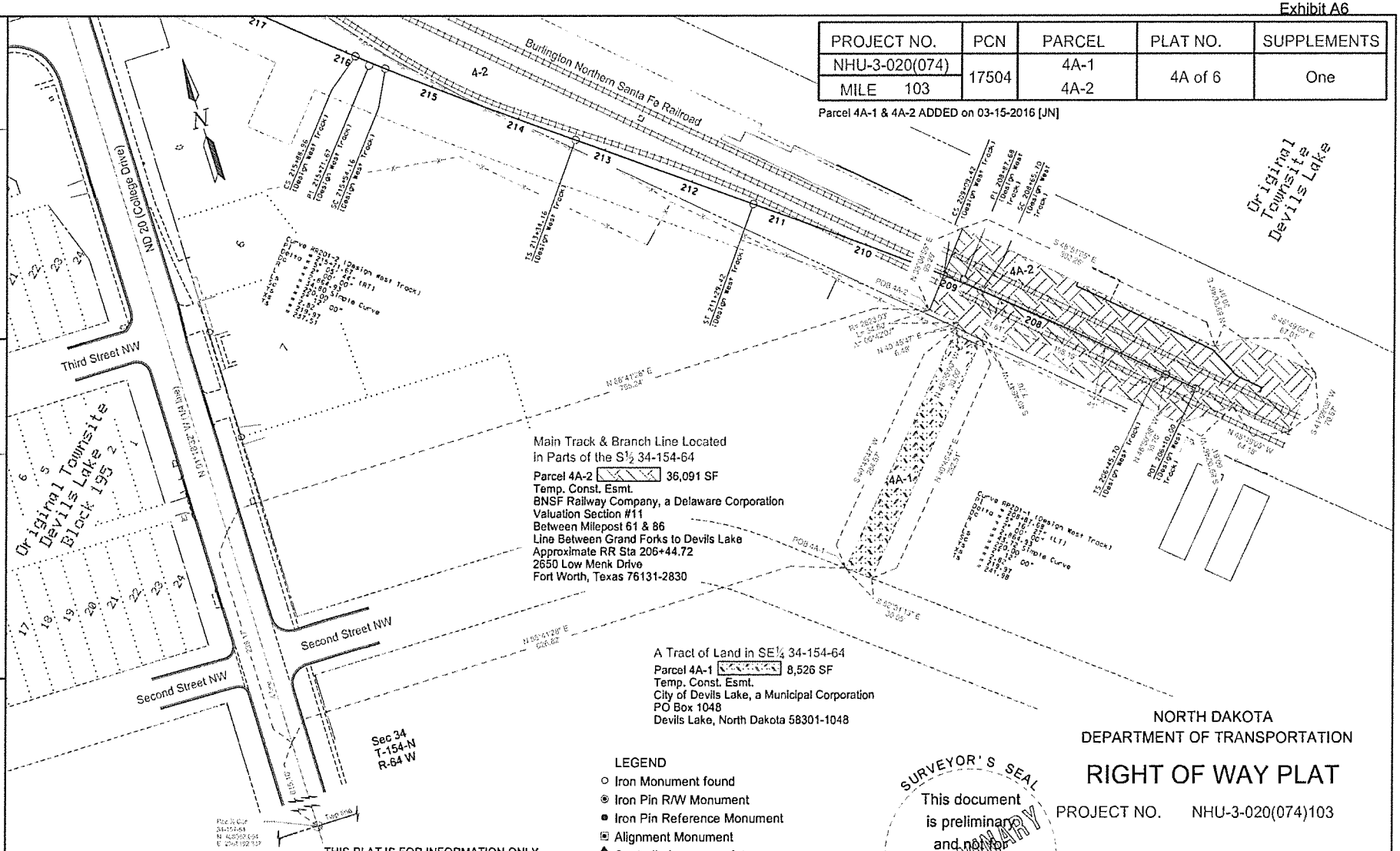

LEGEND
- Iron Monument found
- Iron Pin R/W Monument
- Iron Pin Reference Monument
- Alignment Monument
- Controlled access point

GRAPHIC SCALE (in feet)
0 100 200 300
1" = 100'

Basis of bearing is: Grid

All coordinates on this sheet are Ramsey County ground coordinates. They are derived from the "North Dakota Coordinate System of 1983", NAD83 (CORS), North Zone Combination Factor (cf) = 0.9998685 (International Foot)

Assumed Coordinates

THIS PLAT IS FOR INFORMATION ONLY. THE DATA ON THE PLAT IS NOT OFFICIAL UNTIL THE PLAT IS SEALED AND SIGNED BY A REGISTERED LAND SURVEYOR.

SURVEYOR'S SEAL
This document is preliminary and not for recording or implementation purposes.
PRELIMINARY

NORTH DAKOTA
DEPARTMENT OF TRANSPORTATION

RIGHT OF WAY PLAT

PROJECT NO. NHU-3-020(074)103

RAMSEY COUNTY

APPROVED _____

DATE _____

DATE SURVEY WAS COMPLETED: 09/14/2014 | PLAT MADE BY: James Nelson | DATE: 08/10/2015 | CHECKED BY L.S.: Brian R. Heath | DATE: 03/01/2016

4/4/2016 9:36:38 AM jamesnelson J:\trans\5211102\CADD\30020103.074\ROW\195RW_005a_RP.dgn

Exhibit A7

PROJECT NO.	PCN	PARCEL	PLAT NO.	SUPPLEMENTS
NHU-3-020(074)	17504	5-1	5 of 6	One
MILE 103		5-2		

Parcel 5-1 & 5-2 MODIFIED on 03-15-2016 [JN]
Parcel 5-3 DELETED on 03-15-2016 [JN]

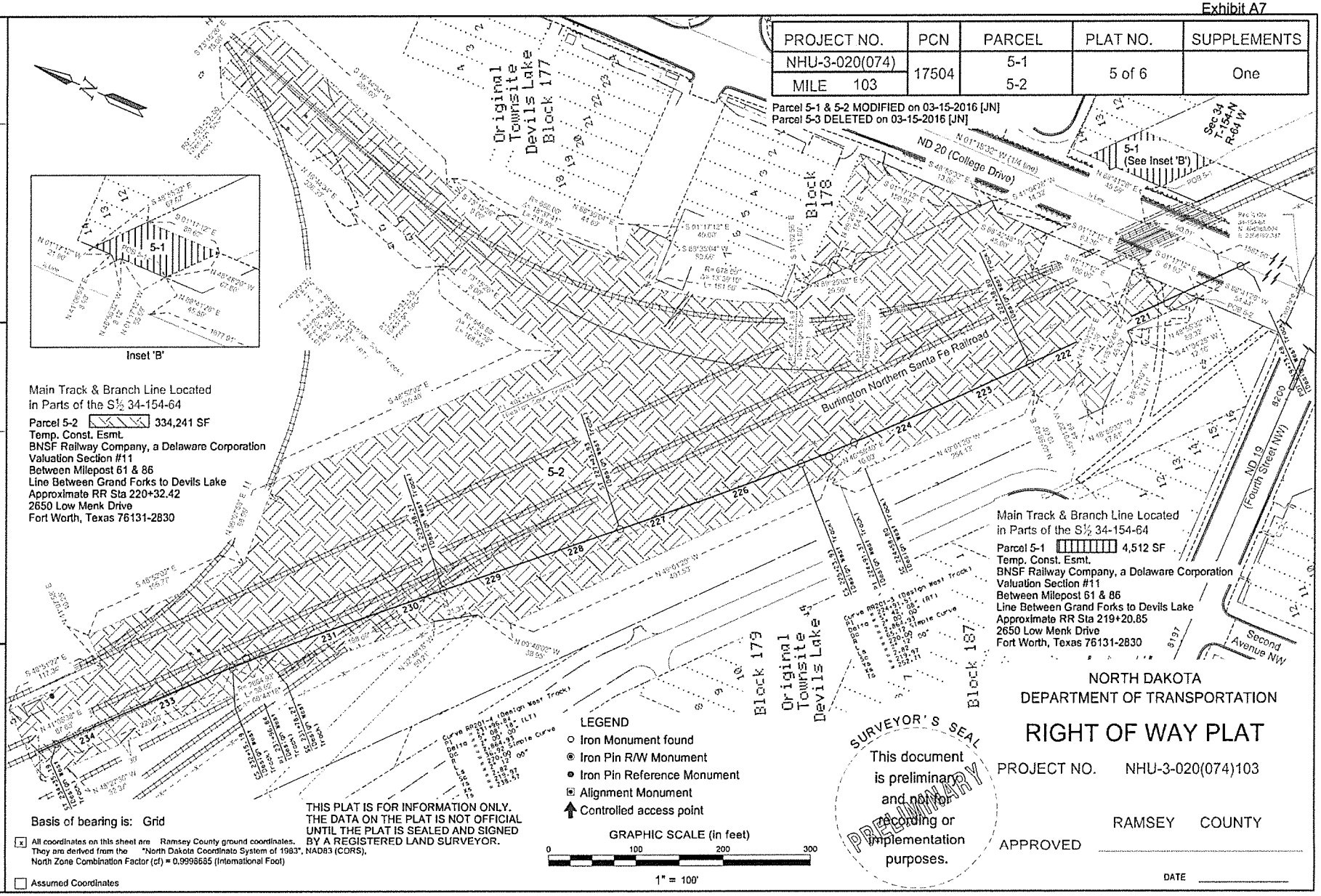

Exhibit B

REQUIREMENTS FOR CONTRACTORS WORKING ON RAILROAD RIGHT-OF-WAY

The North Dakota Department of Transportation agrees to not allow their contractors to occupy or work on the railroad's right-of-way prior to signing the Road Authority's contract, which shall include the following list of conditions:

1. All permits and agreements must be in effect, required payments made and insurance certificates received and approved prior to entering railroad right-of-way.

2. Contractor's approved insurance must be in effect prior to entry onto railroad right-of-way and during entire Project.

3. No change will be made to "Construction Plans" without approval by all parties involved. Approved revised plans will be furnished to all parties prior to implementation of changes.

4. Road authority or contractor will incur all costs for track work, including flagging, etc., made necessary due to their construction operation.

5. Flagging protection is always required when equipment crosses or is working within 25 feet of center of any live track. When deemed necessary by railroad officers, a flagman may be required at all times while working on railroad right-of-way in high density rail traffic areas.

6. Crossing of any railroad tracks must be done at approved locations and must be over full depth timbers, rubber, etc. Any equipment with steel wheels, lugs or tracks, must not cross steel rails without aid or rubber tires or other approved protection.

7. All track crossing locations must be covered by a private roadway and crossing agreement.

8. Contractor must furnish details on how he will perform work that will affect existing drainage and/or possible fouling of track ballast, as well as removal of permanent or temporary overhead bridges/structures. (Structures and bridge spans over tracks must be removed intact whenever possible).

9. Absolutely no construction will be allowed within 25 feet of center or any track unless authorized by the Railroad and shown on plan approved by the Railroad. This includes any excavation, slope encroachment and driving of sheet piles.

10. No vehicles or machines shall remain unattended while on railroad right of way.

11. IMPORTANT: Disregarding any of these items will result in contractor's right of entry on railroad right-of-way being suspended for a minimum of 48 hours while infraction is investigated. Based on findings of the investigation, it will be determined if the contractor will be allowed to work on railroad right-of-way in the future.

12. Contractors' safety rules, including rules regarding personal safety equipment, must not conflict with the railroads safety policies or rules.

13. No employee of the Contractor, its subcontractors, agents or invitees may enter Railroad property without first having completed Railroad's Engineering Contractor Safety Orientation found on the web site www.contractororientation.com. The Contractor must ensure that each of its employees, subcontractors, agents or invitees completes Railroad's Engineering Contractor Safety Orientation through internet sessions before any work is performed on the Project. Additionally, the Contractor must ensure that each and every one of its employees, subcontractors, agents or invitees possesses a card certifying completion of the Railroad Contractor Safety Orientation before entering Railroad Property. The Contractor is responsible for the cost of the Railroad Contractor Safety Orientation. The Contractor must renew the Railroad Contractor Safety Orientation annually. Further clarification can be found on the web site or from the Railroad's Representative.

CONTRACTOR'S ACKNOWLEDGMENT:

By their signature on the North Dakota Department of Transportation's contract, the contractor has agreed to abide by all the conditions listed above.

Exhibit C

GENERAL SAFETY REQUIREMENTS FOR CONSULTANTS/CONTRACTORS

Work in the proximity of a railroad track is potentially dangerous. Employees and contract employees of consultants/contractors are governed by the following safety rules and general safety requirements while on railroad property. Consultant/contractor is responsible for enforcement of these rules and requirements. Railroad has the right to bar consultant/contractor employees and its contracted employees from working on railroad property if railroad deems such employees are unsafe workers. Consultant/contractor is also responsible for compliance with federal and state laws and any government regulations.

Safety rules cannot be all-inclusive. Workers must refrain from unsafe and improper practices, including both the violation of written rules and regulations and rules of common sense.

1. The use of alcoholic beverages, intoxicants, narcotics, or other controlled substances by employees subject to duty or their possession or use while on duty or on railroad property is prohibited. Workers must not report for duty under the influence of any alcoholic beverage, intoxicant, narcotic, marijuana or other controlled substance, or medication, including those prescribed by a doctor, that may in any way adversely affect their alertness, coordination, reaction, response or safety.

2. Scuffling, horseplay, practical jokes and all conduct of a similar nature is prohibited.

3. All vehicle accidents resulting in damage to railroad property will be reported immediately to the railroad engineer.

4. Employees are prohibited from having firearms or other deadly weapons, including knives with a blade in excess of three inches, in their possession while on duty or on company property, except those authorized to have them in the performance of their duties or those given special permission.

5. Good housekeeping is of the utmost importance in the prevention of accidents, injuries, and fires. Clean-up will be conducted on a daily basis.

6. Tools or work materials must not be left in close proximity to tracks.

7. Throwing waste, garbage, bottles, refuse, or other such materials on railroad property or disposing of such at other than designated locations is prohibited. Each contractor will provide refuse containers at the work site and empty them on a daily basis.

8. Objects which constitute a slipping or tripping hazard must not be left in walking areas.

9. Open fires or fires in barrels are not allowed on railroad property unless appropriate permits are acquired.

10. In all cases, established route of travel in and about property must be used.

11. Railroad vehicles have an unquestioned right-of-way in all circumstances relating to work on or about the track area.

12. Workers must not wear or use anything which impairs vision or hearing. Listening to personal radios or tape players is prohibited while on duty.

13. Upon entering work site, shoes or sturdy construction and proper height to provide adequate protection and hard hats are required. Other appropriate safety equipment (glasses, goggles, gloves, side shields) must be worn when OSHA or other railroad regulations require.

14. All employees will become familiar with and be capable of recognizing railroad equipment adjacent to the tracks.

15. Walking, stepping or standing on rail or ties, or sitting on any part of track structure except in performance of duty is prohibited. NOTE: The term "track structure" means the space between the rails and within three feet outside the rails, unless otherwise specified.

16. Workers are prohibited from tampering with switches or any other railroad equipment unless it is necessary for work operation and only in the presence of an authorized railroad worker.

17. Workers must not go underneath rail cars. They must not occupy rail cars except in performance of their duty.

18. Workers must not cross tracks by crossing over between cars that are coupled together.

19. Workers must not attempt to catch onto or ride any moving railroad equipment, even though it may be moving slowly.

20. Workers must not take refuge from rain, heat, etc., under or in cars or other rail equipment.

21. Workers are warned that trains, locomotives or cars, may be expected at any time, on any track, in either direction, and that they must watch for and keep clear of such movements. Workers must take extra precaution to be on the lookout for approaching trains, especially when working in multiple track territory, when field of vision is limited, or when noisy equipment is in use. A portable air horn shall be used by a designated person to warn workers of approach trains or equipment.

22. Workers shall not work on the track, between tracks in multiple track territory, or nearer than 25 feet to the track without proper flag protection provided by railroad.

23. Any work within 25 feet of rail without consideration to height must be stopped in the clear when trains are approaching and passing. The machine operator and workers must stand back at least 25 feet from the track. If the 25-foot distance cannot be attained, workers must clear the tracks as far as possible.

24. Work in tunnels, on bridges and overpasses must be done in accordance with a safety plan agreed upon by the railroad engineer or his representative prior to beginning work in these areas. When work is being done in tunnels, specific requirements must be met and work done under the railroad's supervision.

25. Do not wave arms or objects violently except in an emergency, this is a STOP signal.

26. Workers must not make any movement toward an approaching train or operate machinery in a manner that would cause the engineer to believe that the track is going to be fouled.

27. Crossing tracks immediately in front of moving equipment is prohibited.

28. When necessary to cross any track, look both ways and keep at least 25 feet from the nearest end of stationary rail cars.

29. Machines may be operated across tracks only at established grade crossings. If it is necessary to do so at any other location, it may be done only with permission of and under the supervision of the railroad engineer or his representative on site.

30. Some rails are conductors of electrical current and are integral parts of the railroad's operating system. Devices that could shunt this electrical current must not be laid across rails. No hand or portable tools will be left on the rails at any time. Use a wooden lath to provide separation when making measurements adjacent to the tracks.

31. Machines or vehicles must not be left unattended with the engine running. If a machine is left unattended, it must be in gear with brakes set. If it is equipped with blade, pan or bucket, that must be lowered to the ground.

32. All machinery and equipment left unattended on the right-of-way must be left inoperable and secured against movement.

33. When leaving work site areas at night and over weekends, the areas must be left in a condition that will ensure that railroad employees who might be working in the area are protected from all hazards. Any pen pits or holes shall be covered securely and a physical barrier such as a fence placed around the opening.

34. Machinery or equipment shall not be stored or left temporarily near a highway grade crossing in such a manner as to interfere with the sight distances of persons approaching that crossing. Prior to beginning work, contractor, with concurrence of the railroad engineer or his representative on site, will establish a storage area.

35. Cutting or knocking down trees or moving rocks and other materials that might fall on the track structure or on communications or power lines is prohibited, unless done with the approval and supervision of the railroad engineer or his representative.

36. Workers must not create and leave any condition at the work site that would interfere with water drainage.

37. Safeguards and safety signs must be kept in place and in good condition. It is the responsibility of the contractor to provide same.

38. Each person in charge of a work party must be familiar with the mile post location of the area in which work is being performed so that in cases of emergencies the exact location may be given to railroad personnel.

39. In cases of emergency, it may be necessary for contractor's employees or agents to flag and stop approaching trains. Flagging equipment should consist of red fuses and/or red flags.

40. When emergency flagging is necessary, workers should protect against trains moving in both directions.

41. When required to perform emergency flagging, workers must understand that a great distance is required in which to stop a moving train. The flag person must be at least 1.5 miles from the point being protected in order to provide minimum distance for the engineer to stop the train.

    A stop signal is given by swinging the lighted fuse or red flag at right angle to the track, but the engineer will recognize the stop signal if given violently in any manner from a point near the track. Workers, when giving a stop signal, must not stand on or within fouling distance of the track, as normally the engineer will not have the required stopping distance to stop short of the point where the signal is being given.

42. When an emergency exists or if any hazard is noticed on passing trains, the railroad engineer or his representative on site must be notified immediately.

43. High frequency radios (not CB's) shall be used by all crews for emergency communications between crews.

44. Radio transmitters must not be operated when located less than 250 feet from blasting operations.

45. When it is necessary to create a hazardous condition in performing work on or in the vicinity of a track, proper protection must be afforded in accordance with a safety plan submitted to and approved by the Railroad Engineer or his representative prior to creating the hazardous condition, as well as taking any other precautions that may be necessary to protect the condition.

46. Before excavating, it must be ascertained by the contractor if there are underground electric wires, cables, or pipe lines in the vicinity.

47. If obstructions are encountered that do not appear on drawings, the railroad crew chief must be notified before continuing excavation operations.

48. All excavations, regardless of depth, will be shored where there is any danger to track structure.

49. No excavation will be left uncovered or unprotected overnight.

50. Holes or trenches in the vicinity of the track must be covered, upgraded, and protected, when not being worked on.

51. Excavations, trenches or pits on or adjacent to public roads will be physically protected and denoted by highway barriers with flashing lights when not in use.

52. All excavations will be backfilled as soon as possible

53. All power line wires must be considered dangerous and of high voltage unless informed to the contrary by proper authority. For lines rated 50KV or below, minimum clearance between the lines and any part of the equipment or load shall be 10 feet. For lines rated over 50KV, minimum clearance between the line and any part of equipment or load shall be 10 feet plus 0.4 inches for each 1KV over 50KV. If the capacity of the line is not known, minimum clearance of 20 feet must be maintained. A person shall be designated to observe clearance of the equipment and give a timely warning for all operations where it is difficult for operator to maintain the desired clearance by visual means.

54. IN ALL CASES OF DOUBT OR UNCERTAINTY, THE SAFEST COURSE MUST BE TAKEN.

Exhibit D

FLAGGING REQUIREMENTS
FOR CONSTRUCTION PROJECTS ON OR ADJACENT TO PROPERTY OF THE BURLINGTON NORTHERN AND SANTA FE RAILWAY COMPANY

SECTION 1. PROTECTION OF RAILWAY FACILITIES AND RAILWAY FLAGGER SERVICES

(a). The Contractor shall give a minimum of at least thirty (30) working days' notice to the Railways Roadmaster at telephone (701)213-0326, in advance of when flagging services will be required to bulletin the flaggers position and shall provide five (5) working days' notice to the Roadmaster to abolish the position per union requirements.

(b). Railway flagger and protective services and devices will be required and furnished when Contractor's work activities are located over or under of and within twenty-five (25) feet measured horizontally from center line of the nearest track and when cranes or similar equipment positioned outside of 25-foot horizontally from track center line that could foul the track in the event of tip over or other catastrophic occurrence, but not limited thereto for the following conditions:

(1). When in the opinion of the Railway's representative, it is necessary to safeguard Railway's Property employees, trains, engines and facilities.

(2). When any excavation is performed below the bottom of tie elevation, if, in the opinion of Railway's representative, track or other Railway facilities may be subject to movement or settlement.

(3). When work in any way interferes with the safe operation of trains at timetable speeds.

(4). When any hazard is presented to Railway track, communications, signal, electrical, or other facilities either due to persons, materials, equipment or blasting in the vicinity.

(5). Special permission must be obtained from the Railway before moving heavy or cumbersome objects or equipment which might result in making the track impassable.

(c). Flagging services will be performed by qualified Railway flaggers. The base cost for (1) flagger is $1,000 for an 8-hour day which includes vacation allowance, paid holidays, Railway and Unemployment Insurance, Public Liability and Property Damage Insurance, health and welfare benefits, transportation , meals, lodging and supervision, for an eight (8) hour basic day with time and one-half or double time for overtime, rest days and holidays. These rates are subject to any increases which may result from Railway Employees- Railway Management negotiations or which may be authorized by Federal authorities. State/Contractor will be billed on actual costs in effect at time work is performed.

(1). A flagging crew generally consists of one employee. However, additional personnel may be required to protect Railway Property and operations, if deemed necessary by the Railway's representative.

(2). Each time a flagger is called, the minimum period of billing shall be the eight (8) hour basic day.

(3). The cost of flagger services provided by the Railway, when deemed necessary by the Railway's representative, will be borne by the State/Contractor.

(4). The average train traffic per 24-hour period on this route is 14 trains.

NONDISCRIMINATION CLAUSES

During the performance of this contract, the Contractor, for itself, its assignees, and successors in interest (hereinafter referred to as the Contractor) agrees as follows:

1. Compliance with Regulations: The Contractor (hereinafter includes consultants) will comply with the Acts and the Regulations relative to Non-discrimination in Federally-assisted programs of the U.S. Department of Transportation, the Federal Highway Administration, as they may be amended from time to time, which are herein incorporated by reference and made a part of this contract.

2. Non-discrimination: The Contractor, with regard to the work performed by it during the contract, will not discriminate on the grounds of race, color, or national origin in the selection and retention of subcontractors, including procurements of materials and leases of equipment. The Contractor will not participate directly or indirectly in the discrimination prohibited by the Acts and the Regulations, including employment practices when the contract covers any activity, project, or program set forth in Appendix B of 49 CFR Part 21.

3. Solicitations for Subcontracts, Including Procurements of Materials and Equipment: In all solicitations, either by competitive bidding, or negotiation made by the Contractor for work to be performed under a subcontract, including procurements of materials, or leases of equipment, each potential subcontractor or supplier will be notified by the Contractor of the Contractor's obligations under this contract and the Acts and the Regulations relative to Non-discrimination on the grounds of race, color, or national origin.

4. Information and Reports: The Contractor will provide all information and reports required by the Acts, the Regulations, and directives issued pursuant thereto and will permit access to its books, records, accounts, other sources of information, and its facilities as may be determined by the Recipient or the Federal Highway Administration to be pertinent to ascertain compliance with such Acts, Regulations, and instructions. Where any information required of a Contractor is in the exclusive possession of another who fails or refuses to furnish the information, the Contractor will so certify to the Recipient or the Federal Highway Administration as appropriate, and will set forth what efforts it has made to obtain the information.

5. Sanctions for Noncompliance: In the event of a contractor's noncompliance with the Non-discrimination provisions of this contract, the Recipient will impose such contract sanctions as it or the Federal Highway Administration may determine to be appropriate, including, but not limited to:

   a. withholding payments to the Contractor under the contract until the Contractor complies; and/or
   b. cancelling, terminating, or suspending a contract, in whole or in part.

6. Incorporation of Provisions: The Contractor will include the provisions of paragraphs one through six in every subcontract, including procurements of materials and leases of equipment, unless exempt by the Acts, the Regulations and directives issued pursuant thereto. The Contractor will take action with respect to any subcontract or procurement as the Recipient or the Federal Highway Administration may direct as a means of enforcing such provisions including sanctions for noncompliance. Provided, that if the Contractor becomes involved in, or is threatened with litigation by a subcontractor, or supplier because of such direction, the Contractor may request the Recipient to enter into any litigation to protect the interests of the Recipient. In addition, the Contractor may request the United States to enter into the litigation to protect the interests of the United States.

Pertinent Non-Discrimination Authorities:

- Title VI of the Civil Rights Act of 1964 (42 U.S.C. § 2000d *et seq.*, 78 stat. 252), (prohibits discrimination on the basis of race, color, national origin); and 49 CFR Part 21.
- The Uniform Relocation Assistance and Real Property Acquisition Policies Act of 1970, (42 U.S.C. § 4601), (prohibits unfair treatment of persons displaced or whose property has been acquired because of Federal or Federal-aid programs and projects);
- Federal-Aid Highway Act of 1973, (23 U.S.C. § 324 *et seq.),* (prohibits discrimination on the basis of sex);
- Section 504 of the Rehabilitation Act of 1973, (29 U.S.C. § 794 *et seq.),* as amended, (prohibits discrimination on the basis of disability); and 49 CFR Part 27;
- The Age Discrimination Act of 1975, as amended, (42 U.S.C. § 6101 *et seq.),* (prohibits discrimination on the basis of age);
- Airport and Airway Improvement Act of 1982, (49 USC § 471, Section 47123), as amended, (prohibits discrimination based on race, creed, color, national origin, or sex);
- The Civil Rights Restoration Act of 1987, (PL 100-209), (Broadened the scope, coverage and applicability of Title VI of the Civil Rights Act of 1964, The Age Discrimination Act of 1975 and Section 504 of the Rehabilitation Act of 1973, by expanding the definition of the terms "programs or activities" to include all of the programs or activities of the Federal-aid recipients, sub-recipients and contractors, whether such programs or activities are Federally funded or not);
- Titles II and III of the Americans with Disabilities Act, which prohibit discrimination on the basis of disability in the operation of public entities, public and private transportation systems, places of public accommodation, and certain testing entities (42 U.S.C. §§ 12131-12189) as implemented by Department of Transportation regulations at 49 C.F.R. parts 37 and 38;
- The Federal Aviation Administration's Non-discrimination statute (49 U.S.C. § 47123) (prohibits discrimination on the basis of race, color, national origin, and sex);
- Executive Order 12898, Federal Actions to Address Environmental Justice in Minority Populations and Low-Income Populations, which ensures discrimination against minority populations by discouraging programs, policies, and activities with disproportionately high and adverse human health or environmental effects on minority and low-income populations;

- Executive Order 13166, Improving Access to Services for Persons with Limited English Proficiency, and resulting agency guidance, national origin discrimination includes discrimination because of limited English proficiency (LEP). To ensure compliance with Title VI, you must take reasonable steps to ensure that LEP persons have meaningful access to your programs (70 Fed. Reg. at 74087 to 74100);
- Title IX of the Education Amendments of 1972, as amended, which prohibits you from discriminating because of sex in education programs or activities (20 U.S.C. 1681 et seq).

LIMITED SEEPAGE, POLLUTION AND CONTAMINATION COVERAGE ENDORSEMENT WORDING

In consideration of the premium charged for the policy provided by Marsh, it is understood and agreed that Exclusion f of Coverage A of this policy shall not apply to the liability of the insured resulting from seepage and/or pollution and/or contamination caused solely by:

a. unintended fire, lightning or explosion: or

b. a collision or overturning of a road vehicle: or

c. a collision or overturning or derailment of a train.

Notwithstanding the foregoing it is agreed that the coverage provided by this endorsement shall not apply to:

1. loss of, damage to or loss of use of property directly or indirectly resulting from sub-surface operations of the insured, and/or removal of, loss of or damage to sub-surface oil, gas or any other substance;

2. any site or location used in whole or in part for the handling, processing, treatment, storage, disposal or dumping of any waste materials or substances;

3. the cost of evaluating and/or monitoring and/or controlling seeping and/or polluting and/or contaminating substances;

4. the cost of removing and/or nullifying and/or cleaning up seeping and/or polluting and/or contaminating substances on property at any time owned and/or leased and/or rented by the insured and/or under the control of the insured.

Notwithstanding the foregoing, Item 1 does not apply to tunnels.

If railroad protective insurance is obtained from a different insurance carrier, the preceding provisions must be incorporated into the policy.

Exhibit G

Railroad Cost Estimate

The cost to complete the work performed by the railroad as identified in Section IIIB is as follows:

1. Flagging as per Exhibit D = $250,000
2. Placement and removal of all track, signing, and signals as needed for the shoofly and shoofly bridge = $3,962,900
3. Providing engineering and inspection as required in connection with the construction of the Project = $100,000

Payment to the Railroad will be made by the NDDOT upon receipt of a request for payment from the Railroad. The request for payment shall be made to:

North Dakota Department of Transportation
Terry Udland, Bridge Engineer
608 East Boulevard Avenue
Bismarck ND 58501-0700

NORTH DAKOTA DEPARTMENT OF TRANSPORTATION

SPECIAL PROVISION

INTERCONNECT CABLE (COMPOSITE)

NHU-3-020(074)103 PCN 17504

1. DESCRIPTION

This provision sets forth the minimum requirements for a fiber optic interconnection system to establish communication between ITS equipment as specified.

The purpose of this specification is to describe a fiber optic cable for a duct installation application, for the purpose of communication between various ITS devices.

2. GENERAL

The fiber optic cable shall be composite optical cable consisting of single and multimode fiber optics suitable for outside plant operations. The number of each fiber for single and multimode shall be noted on the plans.

The fiber optic cable shall be a single cable consisting of 24 multimode fibers and 24 singlemode fibers.

A. Fiber Optic Cable Specification

1. Cable Specification

   The optical cable shall be:

   a. Dielectric
   b. Loose-tube
   c. Dry Block or totally dry cable (no grease or gel)
   d. Single polyethylene jacket (high or medium density)
   e. Reinforced with aramid yarn (Kevlar)
   f. Zero water peak
   g. Suitable for duct installation

2. Optical Specifications shall meet RUS 7 CFR 1755.900 (PE-90) and Telcordia GR-20 standards for composite cable. The cable shall also meet the following criteria:

   Single Mode Fiber
   a. 8.3/125 micrometer
   b. The attenuation shall be less than or equal to 0.4 dB/km at 1310 nm; less than or equal to 0.32 dB/km at 1383 nm and less than or equal to 0.3 dB/km at 1550 nm.

Multimode Fiber

a. 62.5/125 micrometer
b. The attenuation shall be less than or equal to 3 dB/km at 850 nm and less than or equal to 1 dB/km at 1550 nm.

3. Mechanical Specifications

   a. The maximum tensile load rating shall not be greater than 2700 Newtons (600 lbf).
   b. The minimum bend radius shall be 40 times the cable diameter, but not less than 18 inches in diameter, under load and 20 times the cable diameter under no load.
   c. The temperature range shall be -40°C to +70°C.

4. The cable manufacturer will provide documentation indicating the attenuation and bandwidth for each individual fibers on each reel within five (5) business days after delivery of the cable. Test the fibers prior to placement with an Optical Time Domain Reflectometer (OTDR).

B. Splicing requirements

1. All splicing will occur in a PLP Coyote Pup, Tyco FOSC splice enclosure or an equivalent splice enclosure. Any alternative splice enclosure must be approved by the DOT prior to installation.

2. Each fusion splice shall be 0.10 dB loss and an average splice loss for the entire run of .05dB, with a maximum acceptable splice loss of 0.20 dB.

3. For the fiber optic connectors, a 0.50 dB loss for each connectorized junction is allowable. This includes the connector loss and the fusion splice on the connector.

4. All splice losses are assumed to be a bidirectional average.

5. A CAD schematic drawing shall be supplied to the District Office showing all splice locations and terminations including bundle and individual fiber strand numbers. The CAD schematic drawing shall be in a .dxf, .dwg, or .dgn format.

C. Fiber Optic Connectors

1. The purpose of this specification is to describe fiber optic connectors for mating the ends of the fiber with other fiber optic devices.

2. The fiber optic connectors shall be connectors of “ST” Type.

3. The ITS device locations shall be provided with a wall or rack mounted patch panel frame, as noted on the plans, with capacity to terminate all fibers entering or exiting the location.

All fibers connected to equipment and the remaining fibers in the bundle shall be terminated at a Fiber Patch Panel, which shall have a label for each individual fiber.

D. Breakout Cable

1. The purpose of this specification is to describe a composite fiber optic cable which shall be sufficiently flexible to connect an ITS device location with the backbone cable, while being sufficiently robust to withstand the most common environmental hazards due to personnel handling and other dangers associated with its environs.

2. The composite fiber optic breakout cable shall be a ruggedized cable with six (6) or twelve (12) fibers individually subjacketted. The subjackets shall be color coded or numbered for easy identification.

3. WORK DRAWINGS

Work drawings shall be submitted in accordance with specification 105.08 “Plans and Work Drawings.” Additionally, the work drawings shall be complete, indexed, and shall include but not be limited to the following:

A. Complete details of all components and sections showing all materials.

B. A listing of all applicable North Dakota DOT, UL and AASHTO specification.

C. Name of the manufacturer and supplier.

4. TESTING

End-To-End Conformance Testing using an OTDR. The contractor shall test each fiber of each cable run, including the breakout cables, and provide results of the test and the reel packing label test results from the manufacturer to NDDOT. If the individual cable runs do not match the test results of the packing label test results less the connection and splice losses, the cable shall be replaced at the Contractor’s expense.

5. INSTALLATION REQUIREMENTS

A. Interconnect shall be installed per the manufacturers recommendation with warning tape placed 12 inches above the cable.

B. The contractor shall include a single No.14 AWG unspliced, insulated copper conductor running the full length and parallel to any fiber that is not installed in an existing conduit system with the tracer wire already installed. The purpose of this conductor is for locating the fiber. This is not a separate bid item and the cost shall be included in the price bid for Interconnect Cable.

C. The Contractor shall identify the foot mark of the cable of the incoming and outgoing cable of each hand-hole. The identifying mark shall be recorded and a label shall be placed in the hand-hole. A summary of all identifying marks shall be provided to NDDOT.

D. The Contractor shall leave a minimum of 50 feet of cable slack in each hand-hole. At Splice Enclosure locations, a minimum of 50 feet of cable slack shall be left at each cable end.

6. METHOD OF MEASUREMENT AND BASIS OF PAYMENT

The Interconnect Cable shall be included in the item IT System and will not be measured for payment.

Pay Item	Pay Unit
IT System	Each

Such payment is full compensation for furnishing all materials, equipment, labor, and incidentals to complete the work as specified.

NORTH DAKOTA DEPARTMENT OF TRANSPORTATION

SPECIAL PROVISION

2017 CONSTRUCTION REQUIREMENTS

Projects: NHU-3-019(044)155 - PCN 17505
NHU-3-020(074)103 - PCN 17504
SU-3-982(031)035 - PCN 21609

DESCRIPTION
This project is scheduled to have a 2 year construction schedule.

Complete the following work by August 6, 2017:

1. Detour Route Paving
2. Railroad items:
    - Grading for Shoofly
    - Railroad Sub-Ballast for Shoofly
    - Shoofly Bridge

Please note that failure to meet the August 6, 2017 completion dates, as defined above, could cause significant delays to BNSF and their ability to install the railroad tracks at their scheduled date. Coordinate with BNSF railroad to ensure timely completion of work. BNSF contact information:

KRISTOPHER SWANSON, PE
Manager Public Projects
BNSF Railway Company
763-782-3492 office
Kristopher.Swanson@BNSF.com

Once the work outlined above is complete, the Contractor may request permission, in writing, to perform work in the other areas of the project site. Do not perform work outside the area without the Engineer's written permission. Failure to meet the completion date outlined above will result in liquidated damages of $4,000 per calendar day, respectively, until completed. Liquidated damages will not be charged concurrently.

WINTER SUSPENSION REQUIREMENTS
If the winter suspension requirements are not met, Liquidated damages of $4,000 per calendar day will be charged from November 18, 2017 until April 14, 2018 or until the winter suspension requirements are met. Liquidated damages will not be charged concurrently.

Meet the following conditions before beginning winter suspension:

A. The existing roadway will remain in place with two 12' lanes.
B. The use of the temporary local detour during winter suspension will not be allowed. The truck detour will remain in place.

C. Replace pavement marking that is removed or faded during construction. This work will be paid under the bid items for short term pavement marking.
D. Stabilize any disturbed areas including all staging areas according to the SWPPP. Modification may need to be made to usual anchoring methods to assure that proper retainage of the mulch is achieved. Freeze the mulch to the ground by sprinkling water at a rate of 2,000 gallons per acre. Mulching will be paid at the contract bid price. No additional payment will be made for the work required to secure the mulch.
E. Maintain drainage to inlets and do not allow water to pond between inlets.
F. Remove all equipment and construction materials from the Right of Way and Temporary Construction Easements unless written permission is granted from the Engineer. Store materials and equipment in the area reserved for project staging in the southwest and northwest quadrant of the Shoofly Bridge.
G. Maintain traffic control devices over winter suspension. Post mount or anchor traffic control signs. These signs and devices will be paid for at the contract prices bid for the respective items. Coordinate with the City during snow removal operations.

Once the winter suspension requirements have been met, notify the Engineer in writing to request winter suspension. The Engineer will respond to the request within 5 business days to coordinate inspection of the site to determine if the conditions for suspension have been met. The Engineer may require the completion of additional items of work relating to the suspension before issuing suspension.

NORTH DAKOTA DEPARTMENT OF TRANSPORTATION

SPECIAL PROVISION

PAINTING OVER GALVANIZED STEEL

Project 3-020(074)103 – PCN 17504
3-019(044)155 – PCN 17505

GENERAL
This work consists of the surface preparation and painting of galvanized steel.

MATERIALS
Use a shop applied two coat paint system consisting of a polyamide epoxy primer and an aliphatic polyurethane finish coat. Provide the system from a single manufacturer. Provide components that are recommended for use as part of a two-coat system.

Use a paint system formulated by the manufacturer for use over galvanized steel.

A. Epoxy Primer.
Use a chemically-curing polyamide epoxy primer that is a two component and chemically-curing.

Use primer capable of being spray applied to the manufacturer's recommended Dry Film Thickness (DFT) in one coat without sagging or mud cracking. After mixing the primer shall be smooth, uniform, and free of lumps or coarse particles.

Formulate the color of the primer to produce a distinct contrast with the galvanized surface and the finish coat.

Provide an epoxy primer that meets the material properties shown in Table 1.

Table 1
Paint Properties

Total Solids, percent by volume	54% min
Pot life at 77°F	4 hours min
VOC content	3.5 lbs/gal max
Curing Time for Recoating[1]	24 hours max
[1]When applied at the manufactures' recommended thickness at 77°F and 50% relative humidity.	

B. Finish Coat.
Use a compatible two-component, aliphatic polyurethane finish coat with a weather resistant finish and the gloss and color as specified in the plans.

Use paint with a finish coat that meets the material properties shown in Table 1.

C. Certification and Acceptance.
Before the use of the paint system, provide a Certificate of Compliance as specified in Section 106.01 C, "Certificate of Compliance" and the following:

1. Manufacturer Contact Information;
2. Product Data Sheets;
3. Manufacturer's Application Instructions;
4. Material Safety Data Sheets;
5. A 3” x 5” Color Chip card for the colors specified; and
6. Compatibility statement.

D. Packaging and Labeling.

Provide a label on each container that contains:

- The name of manufacturer;
- The brand name;
- The lot number of the paint;
- Complete instructions for the use of the paint;
- The shelf life of the components; and
- The post life of the mixture.

CONSTRUCTION REQUIREMENTS

A. Surface Preparation.

Prepare the surface according to ASTM D 6386. Do not quench the surface if the galvanized coating will be applied within 48 hours.

Do not use chromate conversion coatings.

B. Coating Application.

Apply paint when environmental conditions, such as temperature, humidity, and dew point, are within the manufacturer's recommended range.

Apply coating in a uniform, even coat and worked into all corners and crevices. Use a brush on surfaces inaccessible to spray applications. On surfaces inaccessible to spray, the coating may be applied with a brush.

The DFT of the coating system will be in accordance with the manufacturer’s recommendations. Remove surface coating from areas outside the manufacturer’s specified range in a manner that protects the underlying galvanized coating and also prepares the surface for recoating.

C. Field Repair of Damaged Painted Coating.

1. Surface Preparation.

Remove areas of damaged coating down to the galvanized surface. Take care not to damage the underlying galvanized coating. Feather edges of cleaned repair areas to ensure a smooth finish.

2. Paint System Application.

Do not allow paint materials to come in contact with surfaces not intended to be painted. Provide a means to protect traffic from spattering paint materials if necessary. Prevent deleterious material form adhering to freshly painted surfaces.

Paint may be applied using spray, brush, or roller. Apply paint only when environmental conditions, such as temperature, humidity, and dew point, are within the manufacturer's recommended range.

D. Field Repair of Damaged Galvanized Coating.

Repair damaged galvanized coatings according to Section 854.02, "Damaged Galvanized Coatings".

METHOD OF MEASUREMENT AND BASIS OF PAYMENT

Include the cost of work described in this Special Provision in the contract unit price for "Pedestrian Railing" and "Railings".

NORTH DAKOTA DEPARTMENT OF TRANSPORTATION

SPECIAL PROVISION

UNTREATED TIMBER

PROJECT NHU-3-020(074)103 – PCN 17504

DESCRIPTION

This work consists of constructing timber structures.

MATERIALS

A. Glued Laminated Timber.

Provide Structural Glued Laminated Timber meeting U.S. Product Standard PS 56-73 for Structural Glued Laminated Timber. The term “structural glued laminated timber” as employed in PS 56-73 is an engineered, stress-rated product of a timber laminating plant, comprising assemblies of suitably selected and prepared wood laminations securely bonded together with adhesives. The grain of all laminations is approximately parallel longitudinally. The separate laminations may not exceed 2 inches in net thickness. They may be comprised of pieces which are end-joined to form any length, pieces placed or glued edge to edge to make wider ones, or pieces bent to curved form during gluing.

B. Timber Connectors.

The dimensions and types of all connectors are listed in the contract drawings. The materials for connectors are as follows:

- ASTM A 711 for Split Ring, Tooth Ring, and Shear Plate Connectors.
- ASTM A 47, Grade 35018 for Spike Grid Connectors.
- Galvanize all connectors, except those of malleable iron, according to AASHTO M 111.

C. Hardware.

Bolts, rods, drift-bolts, and dowels may be either wrought iron or medium steel. Make washers integral with the heads and nuts and their diameters being at least four times the diameter of the respective bolts. Galvanize hardware, nails, and spikes according to AASHTO M 232.

CONSTRUCTION REQUIREMENTS

A. General.

Store all timber to shed water and to prevent distortion and warping. Open stack untreated timber.

Handle all timber without splitting or damaging the surface and edges.

Do not reuse timber on the finished structure which has been used as temporary falsework or staging material.

B. Fabrication.

Accurately cut and frame all lumber and timber to a close fit so the joints have an even bearing over the entire contact surfaces. Do not shim joints or use open joints.

Bore the following size of holes in untreated timber:

- Bolts - same diameter as the bolt.
- Rods, drift bolts or dowels - 1/16 inch greater than the diameter of the rod, bolt or dowel.
- Lag screw shank - same as the nominal size of the lag screw.

Provide bolts of the sizes specified and long enough to extend completely through the nuts. Do not use extra washers on bolts that are too long, and do not rethread galvanized bolts.

Install nails, spikes and other timber connectors so the heads are flush with the surface of the wood.

BASIS OF PAYMENT

Quantities of various items in completed and accepted structures will be measured for payment according to the Contract for the pay items, and in the terms of the prescribed units for those items. Only accepted work will be included and the dimensions will be those shown or authorized in writing by the Engineer.

A. Sawn Timber.

The unit of measure will be the Thousand Feet Board Measure (MBM), and the amount to be paid for will be the actual number of (MBM) in the completed and accepted structure computed from actual sizes of full sawn timber and nominal sizes of dressed timber.

B. Glued Laminated Timber.

The unit of measure will be the Thousand Feet Board Measure (MBM), and the amount to be paid for will be the actual number of (MBM) in the completed and accepted structure computed from actual sizes of panels used.

Pay Item	Pay Unit
Untreated Timber	MBM

Such Payment is full compensation for furnishing all materials, equipment, labor, and incidentals to complete the work as specified.

NORTH DAKOTA DEPARTMENT OF TRANSPORTATION

SPECIAL PROVISION

WATERPROOFING

PROJECT NHU-3-020(074)103 – PCN 17504

DESCRIPTION

This work consists of supplying and installing a waterproofing system on concrete deck and approach slab surfaces. In addition to the requirements contained herein, perform the work in accordance with the manufacturer's instructions and recommendations.

MATERIALS

Use waterproofing materials, hardware and protective panels complying with the specifications described below.

CONSTRUCTION REQUIREMENTS

A. General.

Do not install deck waterproofing components when ambient, substrate or material temperatures are below 40 degree F or above 100 degree F or when wet or damp surfaces will restrict the full bonding of materials.

B. Materials.

1. Provide a Butyl Rubber or Ethylene Propylene Diene Monomer (EPDM) membrane that is 0.06 inches thick, minimum meeting the requirements of ASTM D6134 shown in the table below. Provide tongue and groove field splices.

Type	EPDM	Butyl
Thickness, minimum inch (mm)	.054 (1.37)	.054 (1.37)
Hardness, durometer A	60 +/- 10	60 +/- 10
Tensile strength, minimum psi (MPa)	1,300 (9)	1,200 (8.3)
Elongation, ultimate minimum %	300	300
Tensile set, maximum %	10	10
Tear resistance, minimum lbf./in. (kN/m)	150 (26.2)	150 (26.2)
Brittleness temperature, maximum degress F (degrees C)	-49 (-45)	-49 (-45)
Heat aging at 240 degrees F (116 degrees C):		
Tensile strength, minimum psi (MPa)	1200 (8.3)	900 (6.2)
Elongation, ultimate minimum %	210	210
Linear dimensional change, maximum %	+/- 1	+/- 2
Water absorption maximum, mass %	4	2
Factory seam strength, minimum psi (MPa)	50 (8.8)	50 (8.8)
Water vapor permeance, maximum perms (mg/pasm^2)	.06 (3.5)	.0025 (.14)
Resistance to soil burial (% change, maximum in original value):		
Breaking factory	10	10
Elongation at break	10	10
Puncture resistance lbs. (Kg)	70 (32)	95 (43)

2. Provide asphaltic panels 1/2 inch thick and not less than 3 feet wide by 6 feet long meeting the following requirements.

   a. Manufacture:

      Each panel is formed as a 5-layer member, including a core of a selected blend of asphalt and inorganic mineral filler particles, a bottom reinforcing cover of asphalt-saturated felt and on the top, a cover of asphalt-saturated felt or fiber glass mat that is weather coated and has bond breaking film or coating.

      Blend asphalt and inorganic mineral filler particles to form the core, with the asphalt forming the matrix of the blend to carry the particles. The mineral filler particles function to impart increased density and enhance stiffness and body in the core.

      The inorganic mineral filler particles constitute an aggregate bound in the asphalt matrix which will permit points of ballast rock to penetrate a short distance into the core to secure a good seating position. The aggregate will then resist further penetration and will support the ballast rock.

   b. Workmanship:

      Ensure the top panels are free from defects which may affect serviceability and appearance. Confirm the panels have straight edges and square corners prior to placement.

   c. Properties:

      Asphaltic panels dimensions. Tolerance of ±1/16 inch in thickness, ±1/8 inch in width and ±1/4 inch in length are permitted.

      Weight minimum for 3/8 inch thickness, 2.60 pounds per square foot.

      Weight minimum for 1/2 inch thickness, 3.50 pounds per square foot.

      Water absorption, max, ASTM D545, 1.0%.

      Thickness of asphalt weather-coating, rivuleted average, 0.020 inch minimum.

      Asphalt saturated felt liners maximum 15lb per I00 square foot after saturation.

      Asphalt content 50-60% by weight.

      Inorganic mineral filler particle contents minimum 25% by weight.

      Resistance to deterioration from organisms and substances in contacting soil, ASTM E 154. No effect.

      Flexibility, No cracking or breaking.

      Brittleness at 39-43 degrees F, ASTM D994. No cracking or shattering.

      Heat distortion ASTM D994, 0.3125 inch maximum.

Mineral Filler, Blend carefully selected and graded inorganic mineral filler particles with the asphalt to form the matrix of each panel.

Flow asphaltic weather coating on the exterior top surface of the protection course. Provide coating of sufficient thickness to complete dimensional stability to the material, when stored outdoors in direct sunlight. Apply a suitable bond breaking film or coating, to function as a release sheet. Place the asphalt-saturated felt side against the membrane waterproofing during installation; expose the side with the bond breaking film or coating to the ballast rock.

d. Resistance to Penetration, Dynamic Loading:

Provide material meeting the requirements shown in the table below for the degree of resistance to penetration, when tested in accordance with ASTM D 1883 and modified as described below.

Temperature		Dynamic Load		Penetration	
Deg. F	Deg. C	lbs.	kN	ins., max.	mm, max.
100	38	225	1.00	0.10	2.54
77	25	350	1.56	0.10	2.54
40	4	600	2.67	0.10	2.54

e. Pertinent modifications to ASTM D1883:

Loading Machine -as described, except that the movable head is capable of traveling at a uniform rate of 0.025 inch per minute.

Penetration Piston – as described, except provide a diameter of the piston of 1.0 +/- 0.005 inch.

Gages - as described.

Sample - Test three specimens 6 x 6 inches, cut from each board sample.

Preparation of Test Specimens – Condition the test specimens in a chamber maintained at the selected test temperature (±3 F degrees) for a minimum of 2 hours prior to testing.

Immediately after conditioning, place the test specimen on the platform of the loading machine and the piston placed in the center of the specimen.

Apply the load on the penetration piston so that the rate of penetration is approximately 0.025 inch per minute. Record the penetration at an applied load reading of 40 lb intervals, except where the load increases too fast to record (40 degrees F test).

Inspection. Examine a sample from each lot for appearance, straightness of edges and squareness of comers, and measured for width and length. Calibrate four standard points each, with a micrometer having flat bearing surfaces at both contact points of not less than 3/4 inch diameter. Use the average of the readings in

considering the thickness of the protection course.

f. Flexibility Test:

Condition three specimens 3 x 12 inches at 770 ± 50 degrees F for not less than 2 hours immediately prior to being subjected to test.

Place specimen with the 12 inch dimension perpendicular to and centered over the axis of a horizontal cylinder having a diameter of 19 ± 1 inch.

Clamp one end and grasp the other end of the samples and bend around the cylinder at the uniform rate to complete bend in 60 ± 10 seconds until the specimen is in full contact with the surface of the cylinder.

Examine for any cracking or breaking of the sample.

3. Provide primer, mastic and semi-mastic materials as recommended by the membrane manufacturer.

C. Surface Preparation.

Provide a deck surface free of form release agents and wax base curing compounds; if these contaminants are present, remove by abrasive blast cleaning. Provide a clean, dry, smooth surface free of fins, sharp edges, loose material, oil and grease. Grinders may be utilized, if necessary, to remove protrusions that would puncture the waterproofing membrane.

Thoroughly sweep, vacuum or air blow the area to be waterproofed to remove all dust, dirt and loose foreign material. After the deck is clean, maintain the clean condition until completion of waterproofing.

D Membrane Application.

Apply primer to the concrete deck with a brush or roller at a rate of 250 to 350 square feet per gallon until the surface is completely coated. Allow primer to dry 1 hour or more, until tack-free, prior to application of membrane. Re-prime the surface if not covered with membrane within 36 hours.

Cover construction and control joints with 16 gage galvanized sheet metal centered on the joint. Lap joints in sheet metal 2 inches and round corners of sheet metal to a 1/2-inch radius.

Center an inverted strip of membrane (plastic side down) 6 inches wider than the sheet metal over the sheet metal and the joint. Cover this with a full width of membrane placed rubberized asphalt side down centered on the joint prior to placing membrane over the entire deck surface.

Fill inside corners with a 1/2-inch fillet of mastic.

Place an initial 12-inch wide strip of membrane on all inside and outside corners rubberized asphalt side down and centered along the axis of the corner.

Lay membrane with laps parallel to the long direction of the deck. If there is a deck slope normal to the laps, lay the membrane from the low point to the high point across the fall line so that the laps shed water as do shingles on a roof. Roll the membrane onto the surface

using care to eliminate any wrinkles or air spaces so that a smooth surface results. Lay succeeding strips of membrane with a minimum 2-1/2 inch side or end overlap.

Roll the 2-1/2 inch overlap down firmly and completely using a rubberized wheel-type roller weighing approximately 100 lbs.

Roll membrane applied to sloping or vertical surfaces down firmly over the entire area covered.

Roll outside edges of membrane and finish with a troweled bead of mastic.

Place a double layer of membrane in areas within 6 inches of drains and protrusions and liberally apply mastic to the seams and the contact area between the membrane and drain or protrusion.

Make a careful inspection of the membrane and patch any holes, tears, misaligned or wrinkled seams or other discontinuities with a piece of membrane extending at least 2-1/2 inches beyond the imperfection.

E. Panel Application.

Place a protective cover over the membrane as soon as practicable within 24 hours after the membrane has been laid. Remove dirt and other foreign material from the surface of the membrane before the protective cover is placed.

Lay asphaltic panels on horizontal surfaces without bond coat. Use semi-mastic to bond asphaltic panels to sloping and vertical surfaces. Apply the bond coat with a brush at a rate of 50 square feet per gallon to completely coat the surface. Place asphaltic panels while the bond coat is still tacky.

Lay the first layer of asphaltic panels on the horizontal surface with joints staggered not less than 18 inches, and lay a second layer of asphaltic panels with joints staggered not less than 18 inches from the joints in the first layer. Following application of the bond coat, place one layer of asphaltic panels and rolled firmly on any sloping or vertical surfaces. Lay all joints in asphaltic panels tight and be completely sealed with semi-mastic.

Within 24 hours of placing asphaltic panels on sloping or vertical surfaces, secure the top of the asphaltic panels as shown in the plans.

Within 48 hours of placing membrane protection and prior to placing any wheels from vehicular or equipment traffic onto the bridge deck, apply a minimum 4 inch thick layer of ballast uniformly covering the asphaltic panels. Take care to ensure that asphaltic panels are not shifted from their placed position. BNSF forces will place the ballast and it is the Contractor's responsibility to coordinate with BNSF to ensure the requirement in this section is met.

Where edges or protrusions of asphaltic panels are exposed to prolonged sunlight exposure, coat exposed areas with Fiber Aluminum Roof Coating meeting ASTM Designation: D 2824, Type 2 at a rate of 12 square feet per gallon, (1/8 inch thickness).

F. Acceptance.

Provide work drawings and material specifications to the Engineer for approval prior to installation of waterproofing components. A manufacturer's representative must be onsite to

observe and approve all installations.

BASIS OF PAYMENT

Include costs for supplying and installing all waterproofing materials in the unit price bid for “Class AAE-3 Concrete”.

ATTACHMENTS

Plan 711200, Sheets 11 & 12 of the BNSF Railway – Union Pacific Railroad “Guidelines for Railroad Grade Separation Projects”.

NORTH DAKOTA DEPARTMENT OF TRANSPORTATION

SPECIAL PROVISION

WORK ZONE CAMERA SYSTEM

PROJECT 3-020(074)103 – PCN 17504
3-019(044)155 – PCN 17505

DESCRIPTION
Provide a self-powered mobile trailer webcam to allow users to remotely view the project by a secure network connection.

EQUIPMENT

A. Trailer Camera System (Camera).
Provide a trailer mounted cellular communicating camera system with the following:

- 30’ adjustable telescoping mast;
- 2” ball hitch;
- Manual outriggers or guide wires for stability;
- Solar power capable of operating without sun for a minimum of 10 days; and
- Pan Tilt Zoom (PTZ) Camera:
  - 768 x 494 resolution;
  - 30x optical and 12x digital zoom;
  - 360° continuous pan, +2° to 92° tilt;
  - Low light capable;
  - 30 fps in all resolutions;
  - On-board data back-up to provide minimum twenty days image retention;
  - 8 customizable presets; and
  - Preset tour capable.

B. Online Interface.
Provide a secure online interface to allow users to access the feed using account security features including the following:

- IP address block/ permission;
- 20 separate user accounts with passwords; and
- SSL protection of user login.

Capture and upload images every 15 minutes, 24 hours a day to the online interface. Keep the images available for a minimum of 60 days after the project completion.

Provide an archived schedule of still photos and a calendar based system to allow for images to be selected by date and time.

Provide the users a real-time video viewing that allows the user to do the following:

- Control the pan, tilt, zoom functions of the camera;
- Capable of capturing a live shot; and
- Full screen mode.

Include a time-lapse feature that allows for viewing by the day, week, month, and year.

CONSTRUCTION REQUIREMENTS

A. Installation.
Before beginning construction, install the camera at a location that will provide an unobstructed view of the bridge construction, as approved by the Engineer.

If the Engineer deems that the location does not provide an unobstructed view, move the camera to a new location

B. Moving the Camera during Construction.
If the camera needs to be moved because of construction phasing, notify the Engineer 24 hours before the camera is moved.

Move the camera to a new location with an unobstructed view and have all functions of the camera restored within 24 hours of the move.

C. Maintenance and Support.
Maintain 98% reliability on the camera for the duration of the project.

Notify the Engineer if the camera goes out of service. Provide service on the camera within 24 hours. If the camera is out of service for more than 48, provide a new camera system.

D. Removal.
Do not remove the camera until it is released by the Engineer.

METHOD OF MEASUREMENT AND BASIS OF PAYMENT

Pay Item	Pay Unit
Video Monitoring System	Each

Such payment is full compensation for furnishing all materials, equipment, labor, and incidentals to complete the work as specified.

NORTH DAKOTA DEPARTMENT OF TRANSPORTATION
SPECIAL PROVISION

FUEL COST ADJUSTMENT CLAUSE

Revision Date: 9/8/2006

Introduction

This Special Provision provides for price adjustments to the Contract when significant changes in the cost of motor fuels and burner fuels occur while completing the Contract work. Participation in fuel cost adjustment program is not mandatory. A Contractor is not required to notify the Department at the time of submitting bids whether the Contractor will or will not participate in the fuel cost adjustment provision.

The North Dakota Department of Transportation (NDDOT) will send the low responsible bidder a "Fuel Cost Adjustment Affidavit" (SFN 58393) with the proposed Contract. The Contractor shall return a completed Fuel Adjustment Affidavit with the signed Contract as specified in Standard Specification Section 103.06, Execution and Approval of the Contract. The affidavit shall be returned on all Contracts with this provision even if the Contractor elects not to participate in the provision.

Compensation adjustments for motor fuels and burner fuels consumed in prosecuting the Contract shall be determined by the Engineer in accordance with the provisions set forth herein. Compensation adjustments will be assessed monthly for the cost of the motor fuels and burner fuels whenever the Current Fuel Index (CFI) is outside the given threshold of the Base Fuel Index (BFI) for the Contract.

If the Contractor has a fixed price for fuel for motor or burner fuels to complete the work, no fuel cost adjustments will be made for that fuel type. If there is no fixed fuel price for motor or burner fuels, participation in the Fuel Adjustment provision is the decision of the prime Contractor.

If the prime Contractor decides not to participate, no fuel cost adjustments will be made to the Contract for the Contractor or any subcontractors. If the prime Contractor elects to participate in the fuel cost adjustment provision, the prime Contractor shall include the anticipated fuel cost of subcontractors who wish to participate. If fuel cost adjustments are made to the Contract, the prime Contractor shall ensure that participating subcontractors including second and lower tier, are included in the adjustments in proportion to the percentage of work and anticipated fuel cost by that subcontractor.

Fuel Indexes

Each month, NDDOT will record the average wholesale price for No. 2 diesel fuel and the average wholesale price for unleaded gasoline (87 octane). The monthly average will be the average of the daily rack prices for the month as reported by DTN Energy for Fargo ND.

The burner fuel index will be the No. 2 diesel fuel index regardless of the type of burner fuel actually used.

The Base Fuel Index (BFI) price for motor fuels and burner fuel to be used in the Contract will be the average wholesale price for the month prior to the bid opening.

The Current Fuel Index (CFI) price for motor fuels and burner fuel to be used for each monthly adjustment will be the average wholesale price for the month prior to the adjustment month.

Fuel Ratio

For motor fuels diesel and unleaded gas, the fuel ratio of the Contract will be determined by dividing the Contractor's affidavit costs for each motor fuel by the original Contract amount.

For burner fuels, the fuel ratio of the contract will be determined by dividing the Contractor's affidavit cost for burner fuels by the original Contract amount of plant-mixed hot bituminous pavement paid by the ton. Asphalt cement, binders and other miscellaneous bituminous items shall not be included.

The fuel ratio of the contract for motor and burner fuels will remain the same throughout the length of the contract. The sum of the affidavit fuel costs shall not exceed 15% of the original Contract amount.

The fuel ratio for the three fuel types will be determined by the following equation:

$$\textbf{Fuel Ratio}_{(x, y, z)} = \textbf{Affidavit Cost}_{(x, y, z)} / \textbf{Original Contract Amount}_{(x, y, z)}$$

(x)	=	Motor Fuel (Diesel)
(y)	=	Motor Fuel (Unleaded)
(z)	=	Burner Fuel
Fuel Ratio$_{(x, y, z)}$	=	Fuel ratio of the contract for each respective fuel type
Affidavit Cost$_{(x, y, z)}$	=	Fuel costs from Fuel Adjustment Affidavit (SFN 58393)
Original Contract Amount$_{(x, y)}$	=	Total of the original contract amount excluding lane rental, and Part B of the bid (when A+B bidding is used), if applicable.
Original Contract Amount$_{(z)}$	=	Total original contract amount for all hot bituminous pavement bid items combined, excluding bid items for asphalt cement, sawing and sealing joints, coring, etc. Only hot bituminous pavement bid items measured by the Ton will be included in the calculation.

Cost Change

The monthly change in fuel costs will be determined by the following equation:

$$\textbf{Cost Change}_{(x, y, z)} = (\textbf{CFI}_{(x, y, z)} - \textbf{BFI}_{(x, y, z)}) / \textbf{BFI}_{(x, y, z)}$$

(x)	=	Motor Fuel (Diesel)
(y)	=	Motor Fuel (Unleaded)
(z)	=	Burner Fuel (use diesel prices)
Cost Change$_{(x, y, z)}$	=	The relative change in the current CFI and the BFI for each fuel type
CFI$_{(x, y, z)}$	=	Current Fuel Index for each fuel type
BFI$_{(x, y, z)}$	=	Base Fuel Index for each fuel type

Contract Adjustments

Contract adjustments will be made for the cost of motor and burner fuels whenever the cost change exceeds a ±0.10 threshold. No fuel cost adjustment will be made for work done under liquidated damages. Adjustments will be determined for Motor Fuel (diesel), Motor Fuel (unleaded), and Burner Fuel (burner) separately and shall be computed on a monthly basis.

When the cost change is greater than 0.10, the rebate to the Contractor for each fuel type shall be computed according to the following formulas:

$$\mathbf{FCA_{(x,\,y,\,z)} = Fuel\ Ratio_{(x,\,y,\,z)} \times Estimate_{(x,\,y,\,z)} \times (\ Cost\ Change_{(x,\,y,\,z)} - 0.10\ )}$$

(x)	=	Motor Fuel (Diesel)
(y)	=	Motor Fuel (Unleaded)
(z)	=	Burner Fuel
$FCA_{(x,\,y,\,z)}$	=	Fuel Cost Adjustment for each of the fuel types
$\text{Fuel Ratio}_{(x,\,y,\,z)}$	=	Fuel Ratio for each of the fuel types
$\text{Estimate}_{(x,\,y)}$	=	The monthly total of work done on estimates issued in the current month excluding incentive or disincentive payments, pay factor adjustments and any work completed under liquidated damages.
$\text{Estimate}_{(z)}$	=	The monthly total of hot bituminous pavement work done on estimates issued in the current month, excluding bid items for asphalt cement, sawing and sealing joints, coring, etc. Only hot bituminous pavement bid items measured by the Ton will be included in the calculation. Hot bituminous pavement work completed under liquidated damages will not be included.
$\text{Cost Change}_{(x,\,y,\,z)}$	=	The monthly change in fuel costs for each of the fuel types

When the cost change is less than -0.10, the credit to the Department for each fuel type shall be computed according to the following formulas:

$$\mathbf{FCA_{(x,\,y,\,z)} = Fuel\ Ratio_{(x,\,y,\,z)} \times Estimate_{(x,\,y,\,z)} \times (\ Cost\ Change_{(x,\,y,\,z)} + 0.10\ )}$$

(x)	=	Motor Fuel (Diesel)
(y)	=	Motor Fuel (Unleaded)
(z)	=	Burner Fuel
$FCA_{(x,\,y,\,z)}$	=	Fuel Cost Adjustment for each of the fuel types
$Fuel\ Ratio_{(x,\,y,\,z)}$	=	Fuel Ratio for each of the fuel types
$Estimate_{(x,\,y)}$	=	The monthly total of work done on estimates issued in the current month excluding any incentive or disincentive payments, pay factor adjustments and any work completed under liquidated damages.
$Estimate_{(z)}$	=	The monthly total of hot bituminous pavement work done on estimates issued in the current month, excluding bid items for asphalt cement, sawing and sealing joints, coring, etc. Only hot bituminous pavement bid items measured by the Ton will be included in the calculation. Hot bituminous pavement work completed under liquidated damages will not be included.
$Cost\ Change_{(x,\,y,\,z)}$	=	The monthly change in fuel costs for each of the fuel types

Payments

Adjustments will be determined by the Engineer monthly. Adjustments will be made under the following spec and code for each fuel type:

109 0100	Motor Fuels (Diesel)
109 0200	Motor Fuels (Unleaded)
109 0300	Burner Fuel

When significant payment adjustments are made on final estimates to account for final in-place measured quantities, the Engineer may prorate the adjustments back to the months when the work was done.

Attachments

For informational purposes, a ‘Fuel Cost Adjustment Affidavit’ (SFN 58393) is included as Attachment A.

FUEL COST ADJUSTMENT AFFIDAVIT

North Dakota Department of Transportation, Construction Services
SFN 58393 (08-2006)

Attachment A

Project Number

The Contractor is not required to notify the Department at the time of submitting bids whether he will or will not participate in the fuel cost adjustment program. The Contractor shall return the affidavit on all Contracts with this Provision even if the Contractor elects not to participate.

Check the box for each fuel type that has a fixed price.
No adjustments in fuel price will be made for the boxes that are checked.

☐ Diesel ☐ Unleaded ☐ Burner Fuel

Does your company elect to participate in a fuel adjustment for this contract for the fuels that do not have a fixed price?
No adjustments in fuel prices will be made if **No** is checked.

☐ Yes ☐ No

If yes, provide the total dollars for each of the applicable fuels.

Diesel (x)	$		
Unleaded (y)	$		
Burner Fuel (z)	$		
Sum (x+y+z)	$	% of Original Contract Amount	%*

*The sum of the x, y, and z may not exceed 15% of the original contract amount.

Under the penalty of law for perjury of falsification, the undersigned,

_____, _____
Name Title

of _____, here by certifies that the documentation is submitted in good
Contractor

faith, that the information provided is accurate and complete to the best of their knowledge and belief, and that the monetary amount identified accurately reflects the cost for fuel, and that they are duly authorized to certify the above documentation on behalf of the company.

I hereby agree that the Department or its authorized representative shall have the right to examine and copy all Contractor records, documents, work sheets, bid sheets and other data pertinent to the justification of the fuel costs shown above.

_____ **X** _____
Date Signed

State of _____

County of _____

Subscribed and sworn to before me this _____ day of _____, _____.

(Seal) **X** _____
Signature of Notary Public

My Commission Expires _____