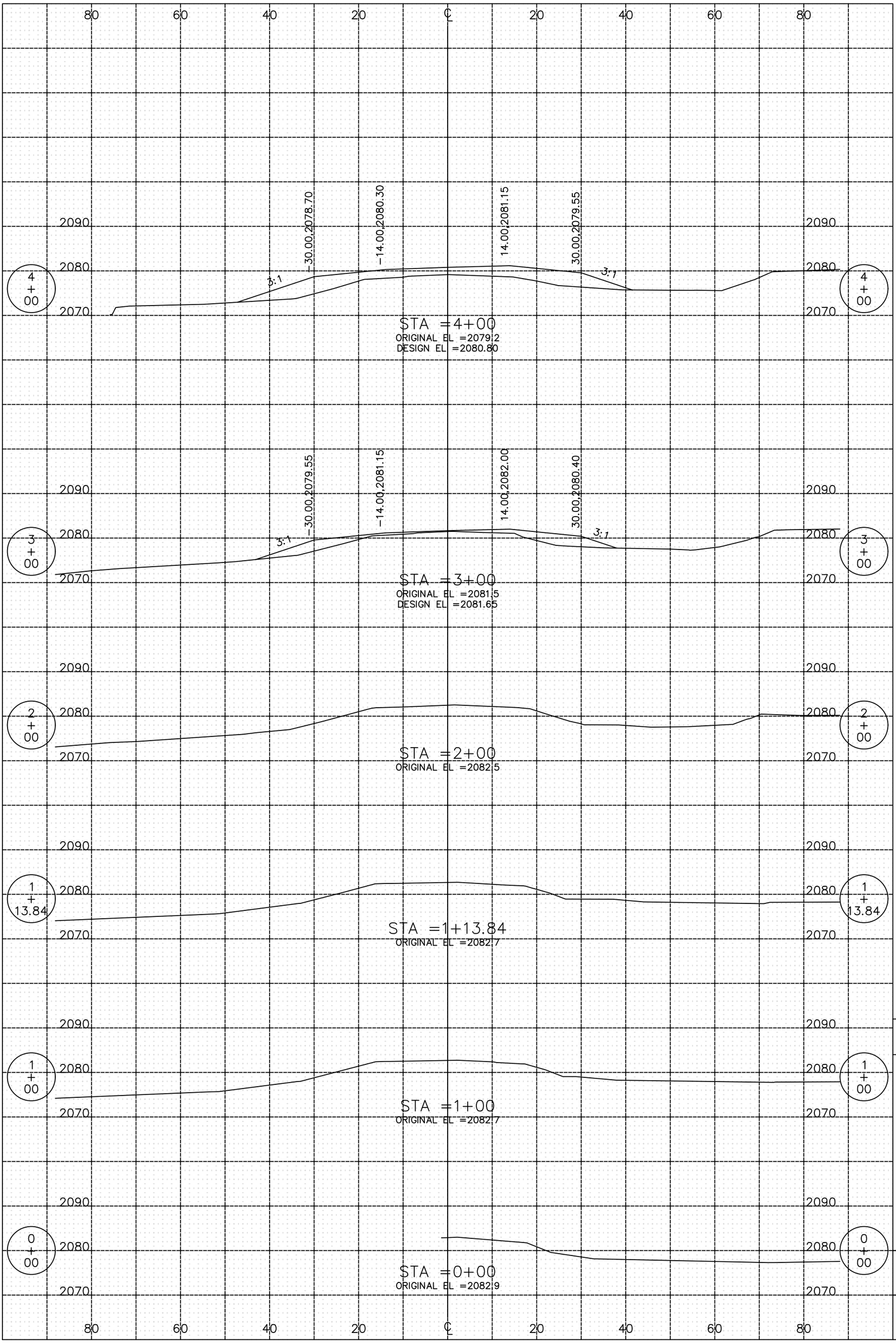

STATE	PROJECT NO.	SECTION NO.	SHEET NO.
ND	CER-1227(004)	200	1

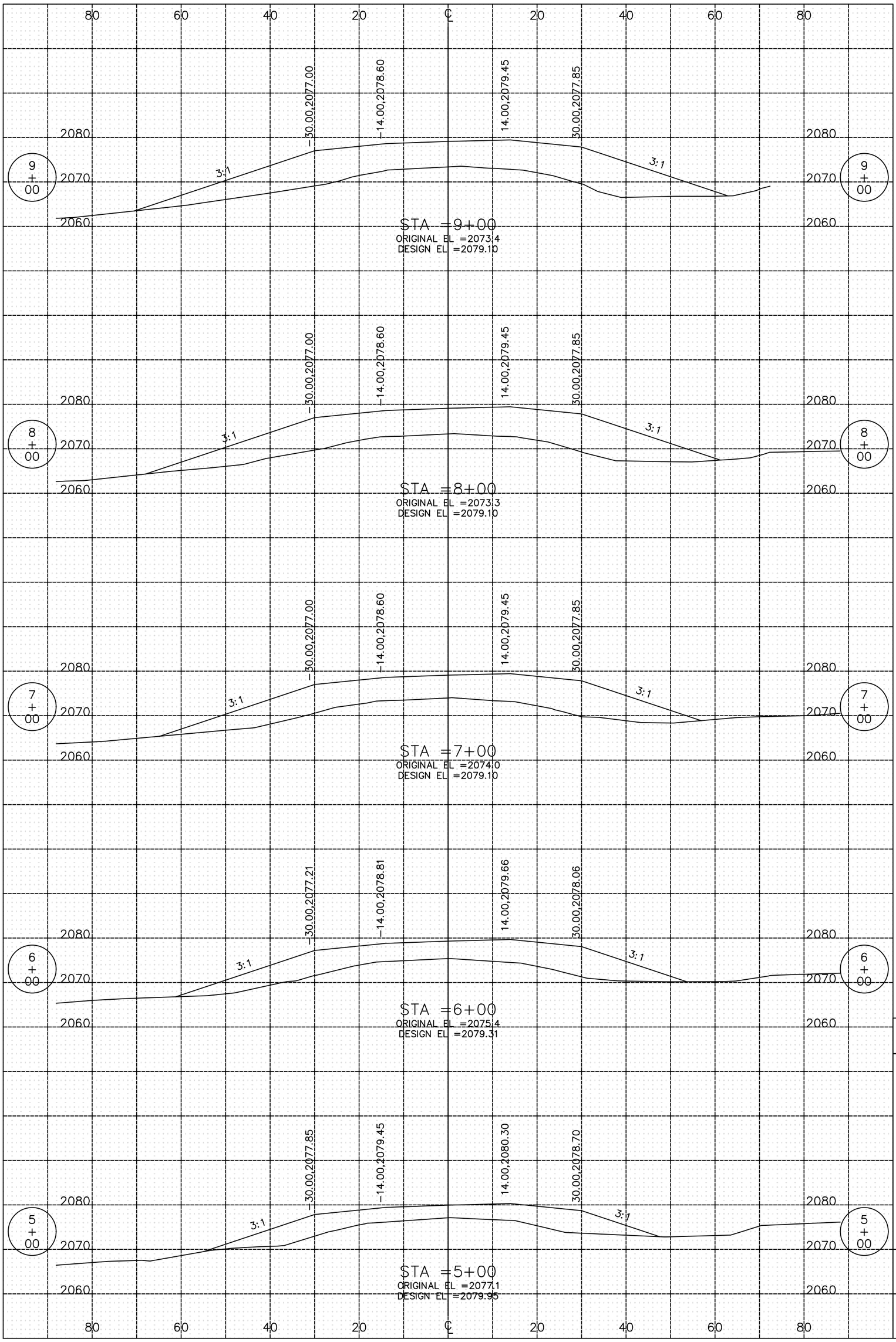

STATE	PROJECT NO.	SECTION NO.	SHEET NO.
ND	CER-1227(004)	200	2

STATE	PROJECT NO.	SECTION NO.	SHEET NO.
ND	CER-1227(004)	200	3

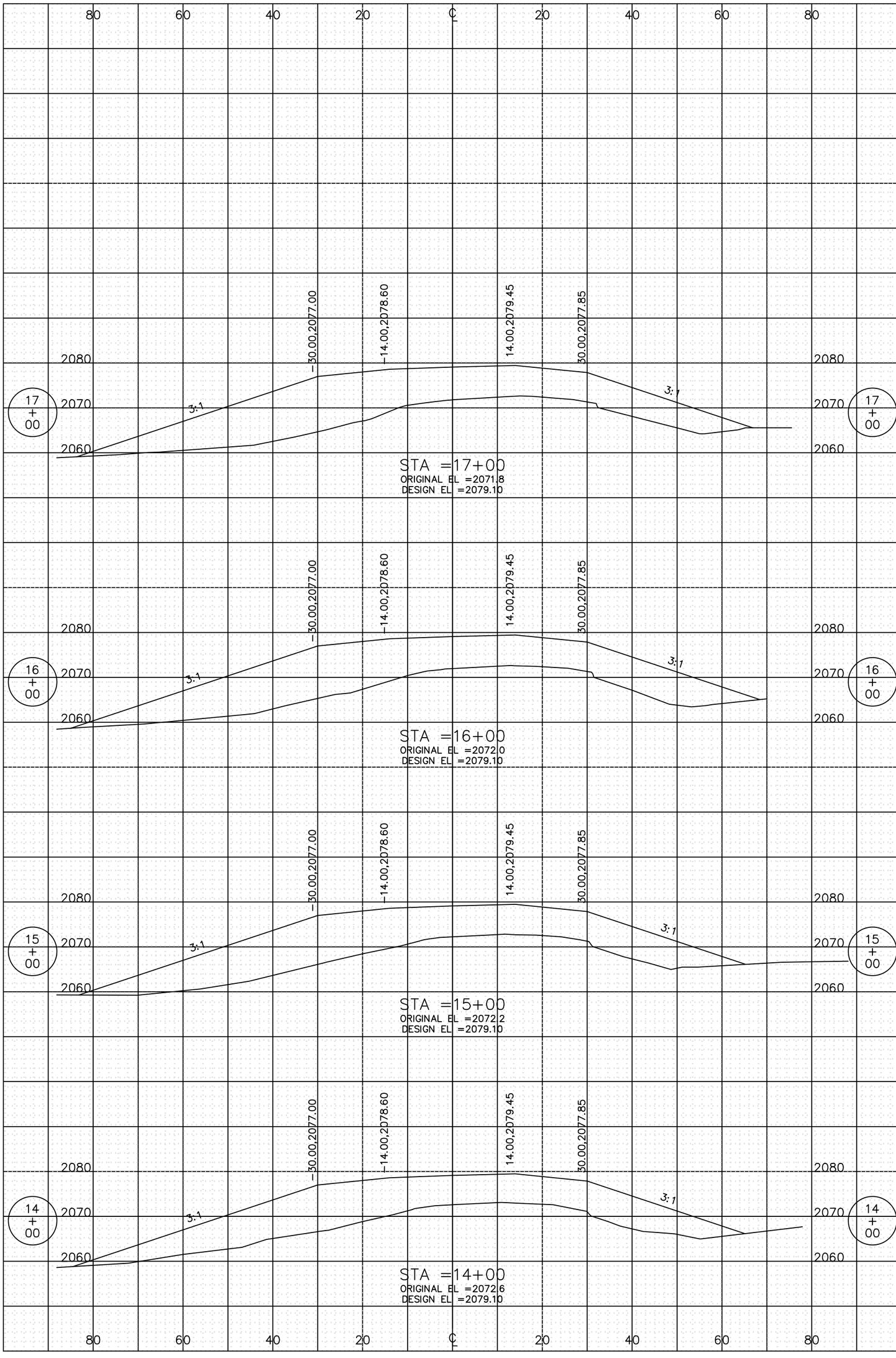

STATE	PROJECT NO.	SECTION NO.	SHEET NO.
ND	CER-1227(004)	200	4

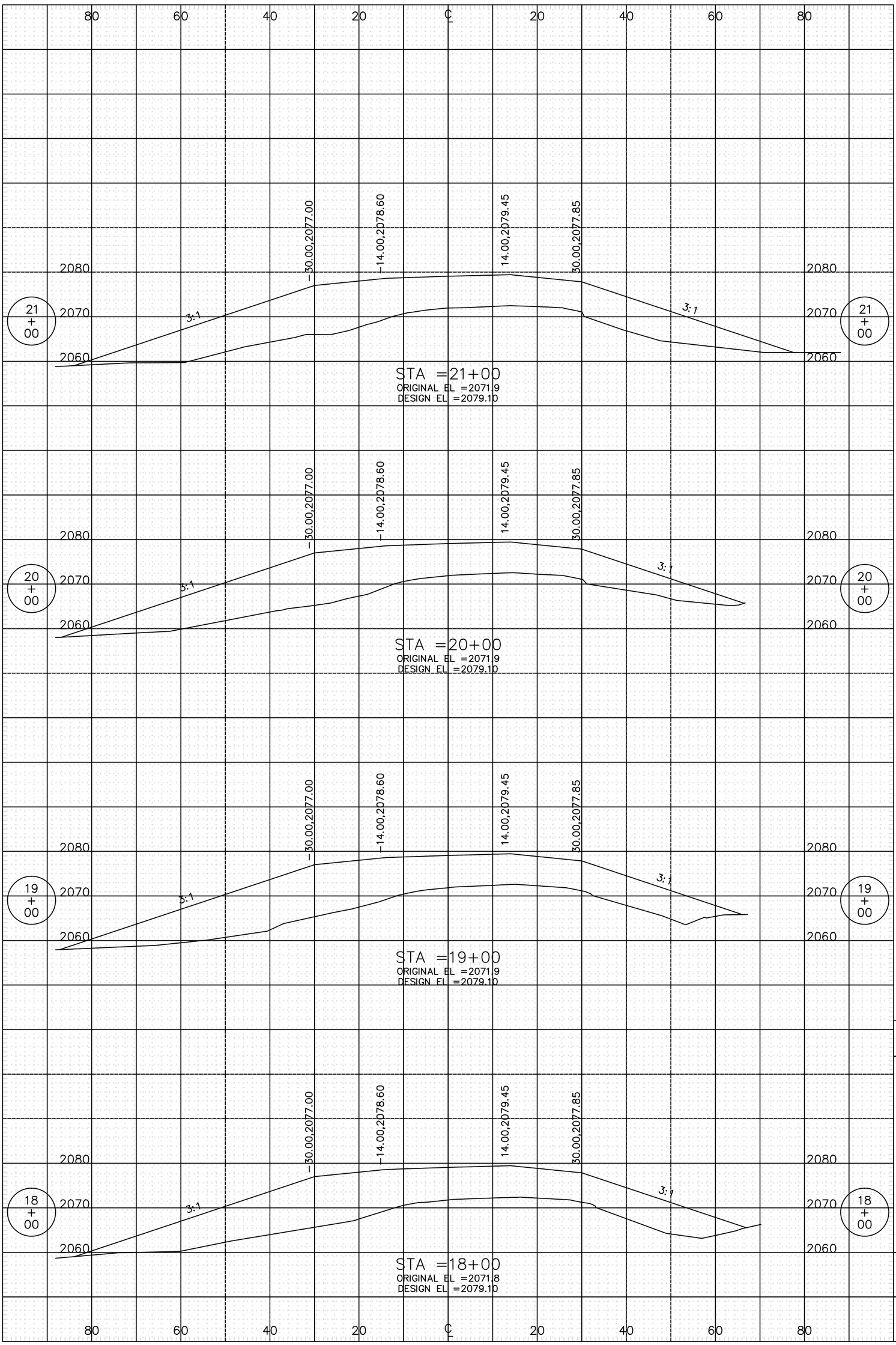

STATE	PROJECT NO.	SECTION NO.	SHEET NO.
ND	CER-1227(004)	200	5

STATE	PROJECT NO.	SECTION NO.	SHEET NO.
ND	CER-1227(004)	200	6

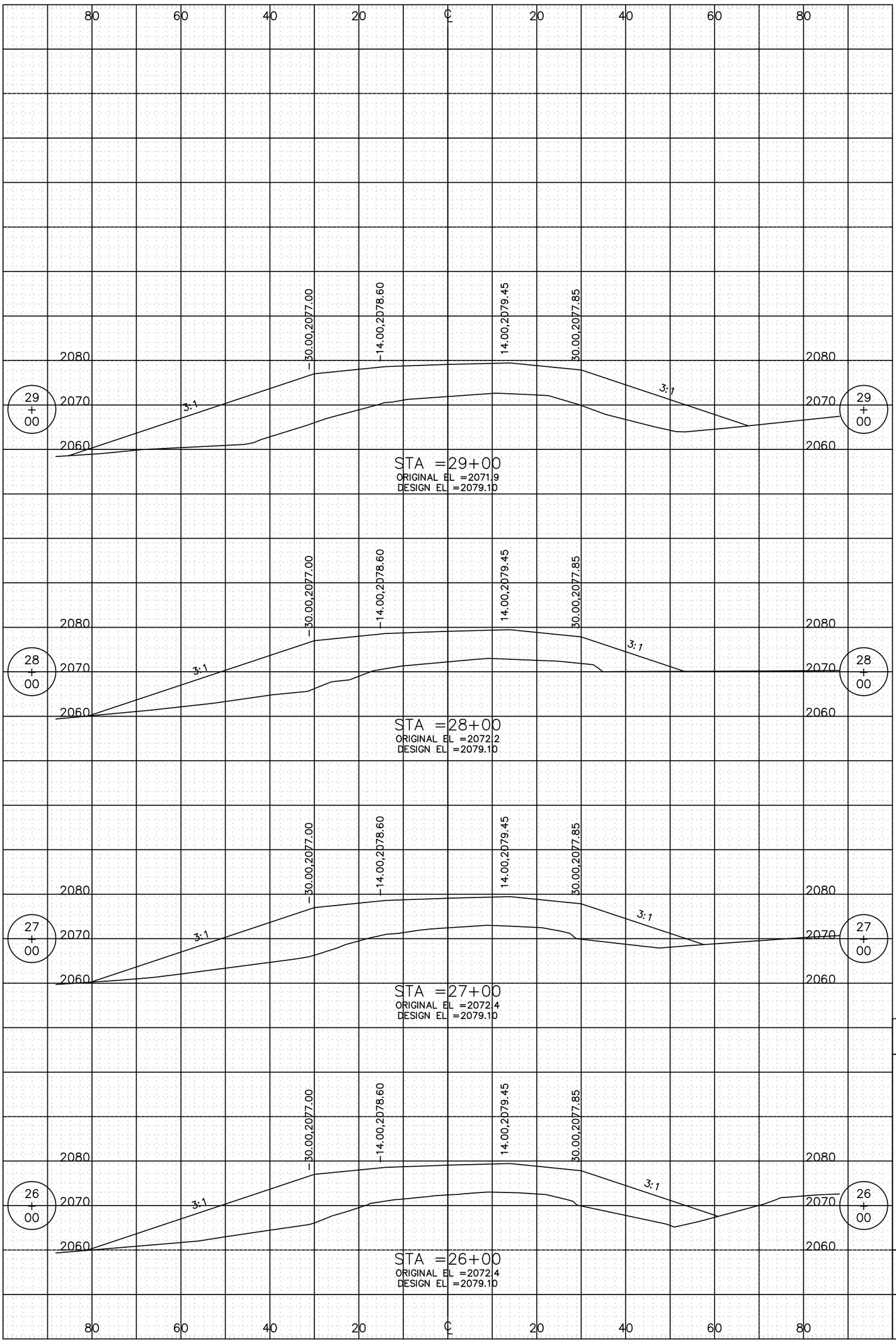

STATE	PROJECT NO.	SECTION NO.	SHEET NO.
ND	CER-1227(004)	200	7

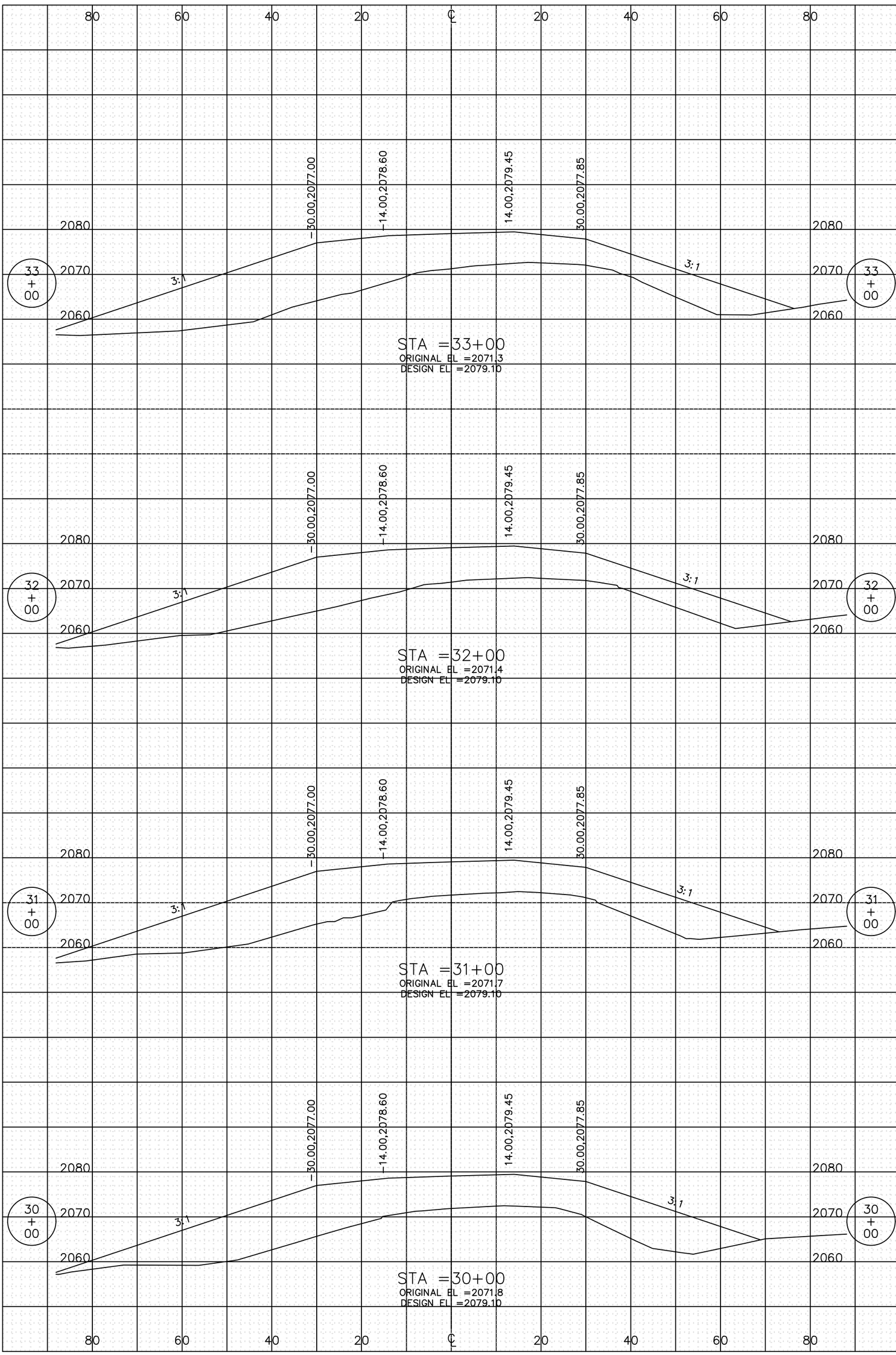

STATE	PROJECT NO.	SECTION NO.	SHEET NO.
ND	CER-1227(004)	200	8

STATE	PROJECT NO.	SECTION NO.	SHEET NO.
ND	CER-1227(004)	200	9

STATE	PROJECT NO.	SECTION NO.	SHEET NO.
ND	CER-1227(004)	200	10

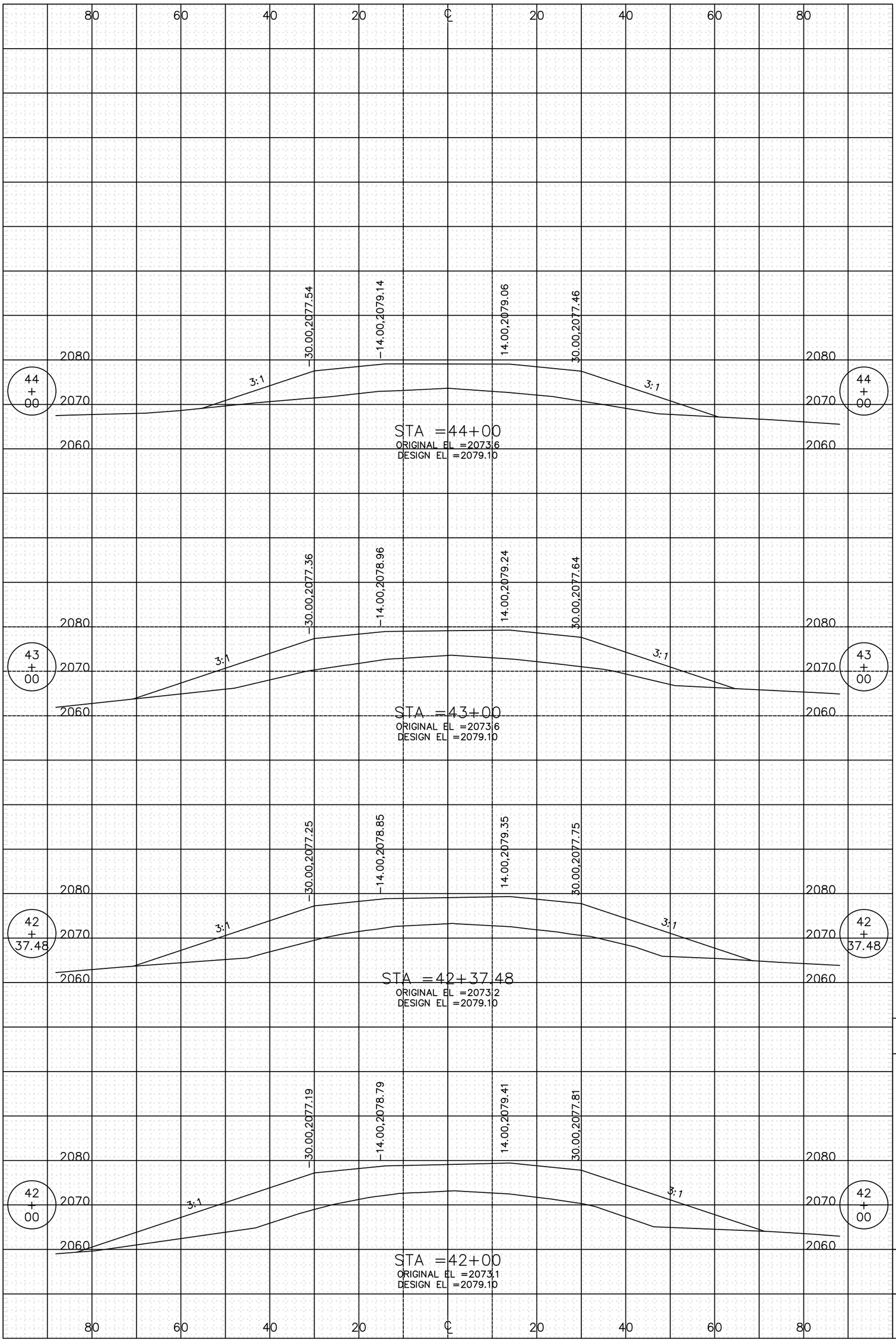

STATE	PROJECT NO.	SECTION NO.	SHEET NO.
ND	CER-1227(004)	200	11

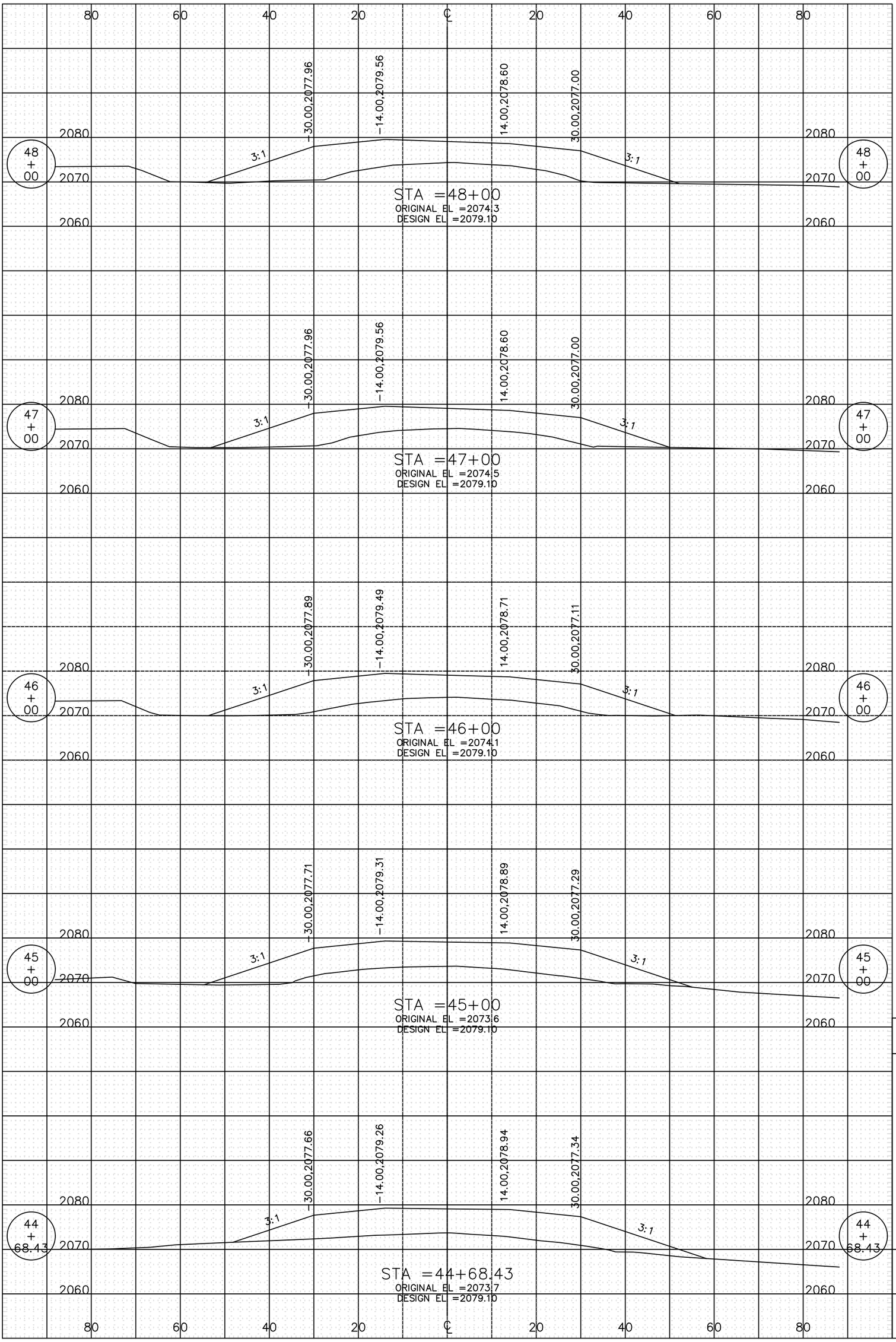

STATE	PROJECT NO.	SECTION NO.	SHEET NO.
ND	CER-1227(004)	200	12

STATE	PROJECT NO.	SECTION NO.	SHEET NO.
ND	CER-1227(004)	200	13

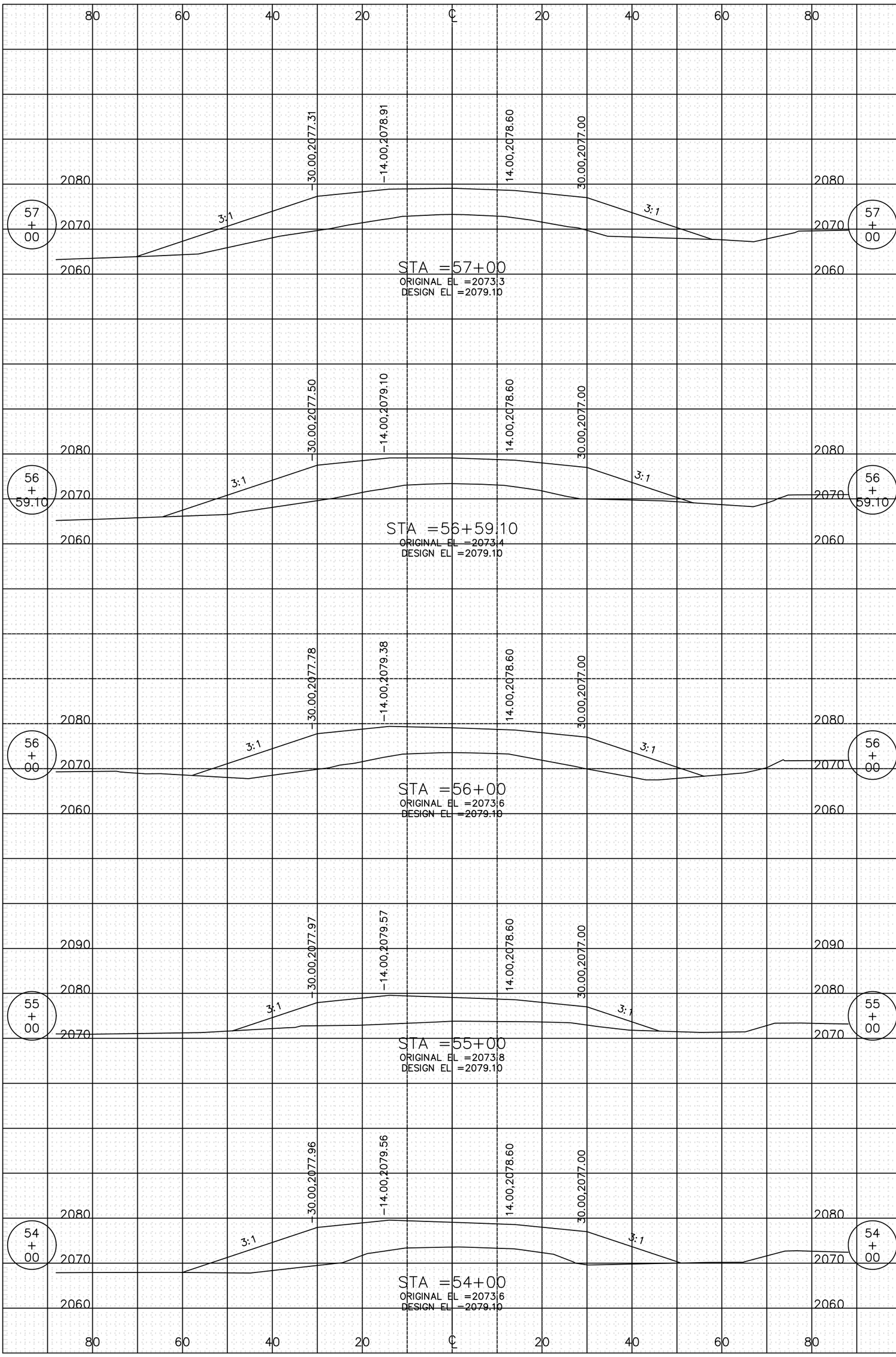

STATE	PROJECT NO.	SECTION NO.	SHEET NO.
ND	CER-1227(004)	200	14

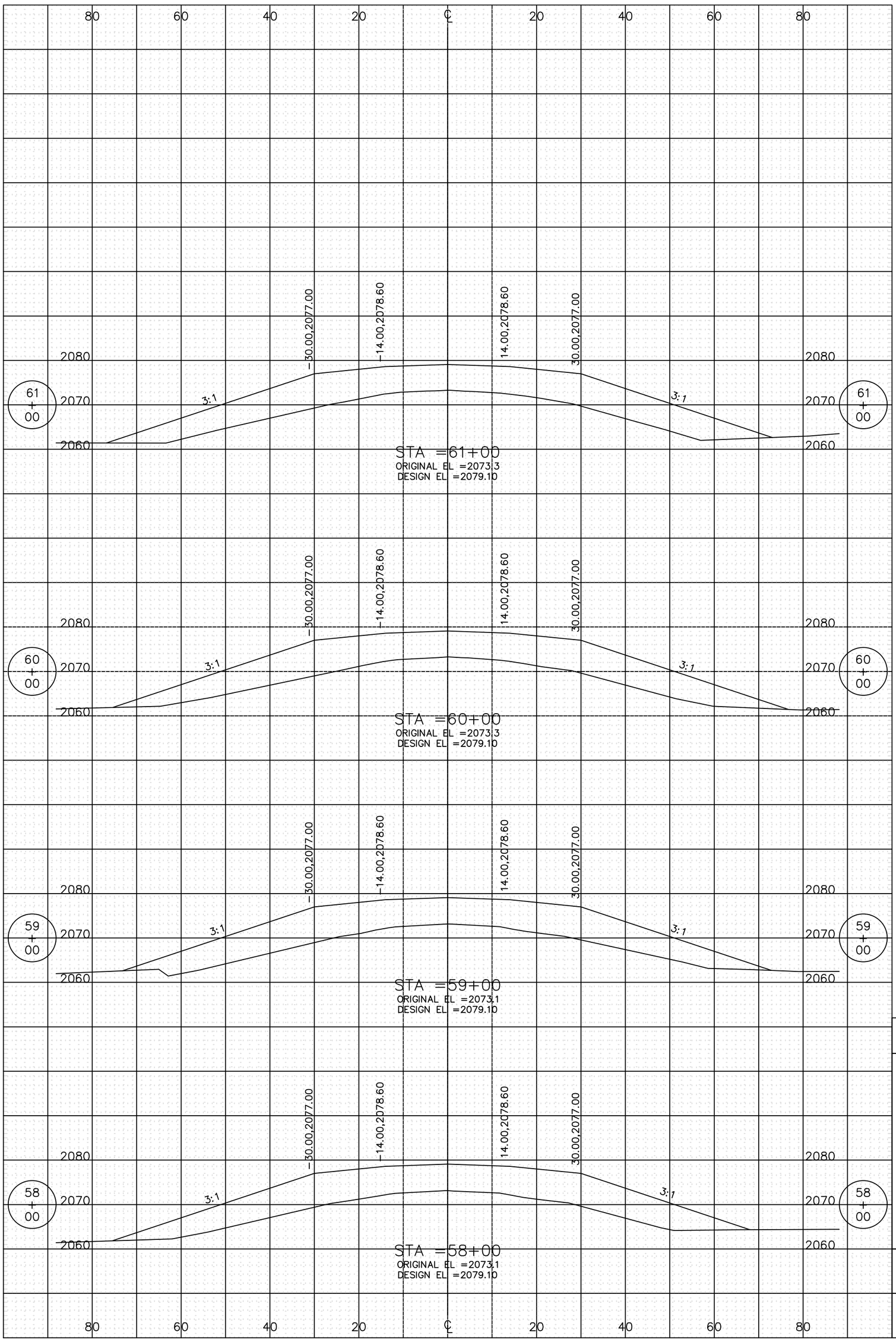

STATE	PROJECT NO.	SECTION NO.	SHEET NO.
ND	CER-1227(004)	200	15

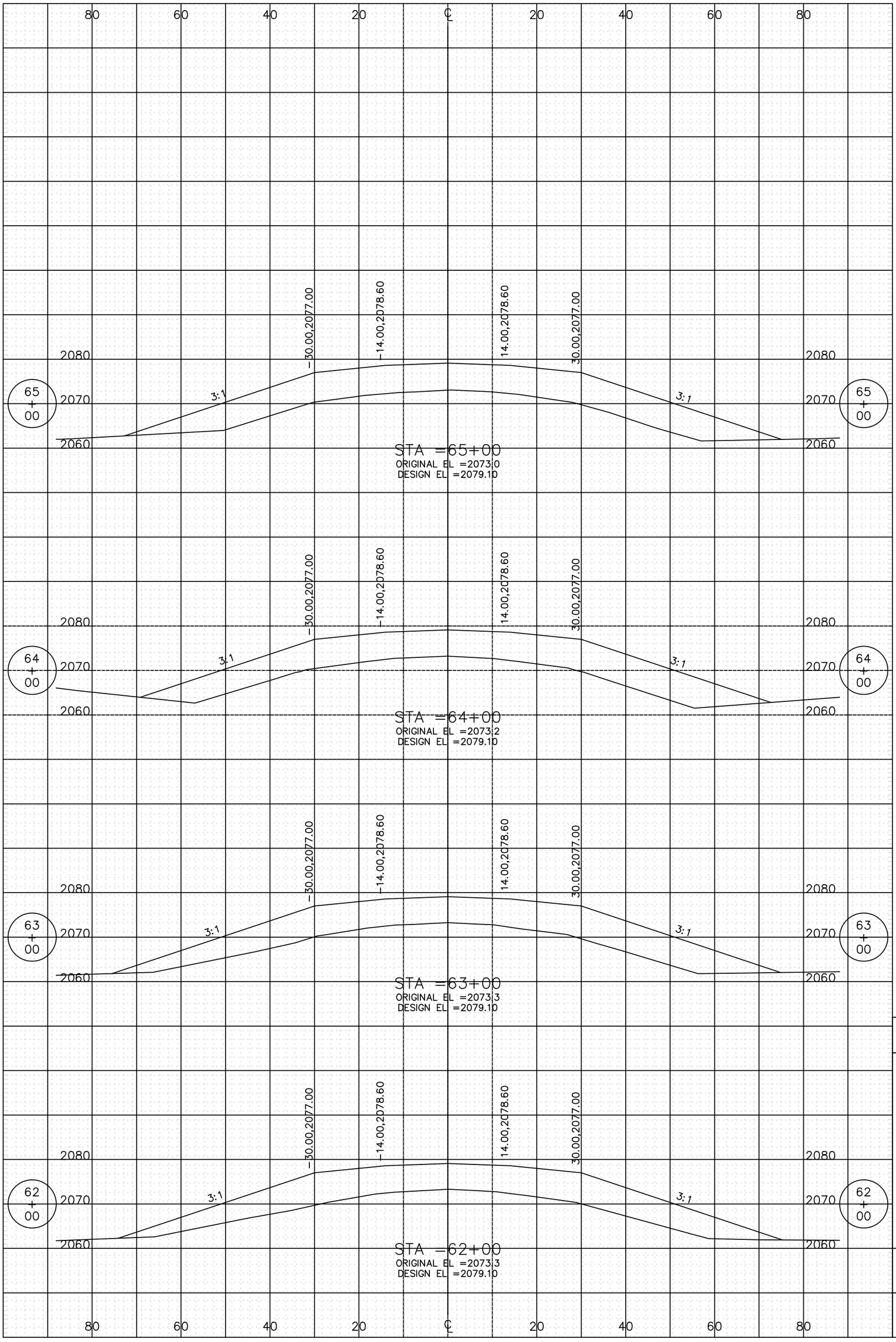

STATE	PROJECT NO.	SECTION NO.	SHEET NO.
ND	CER-1227(004)	200	16

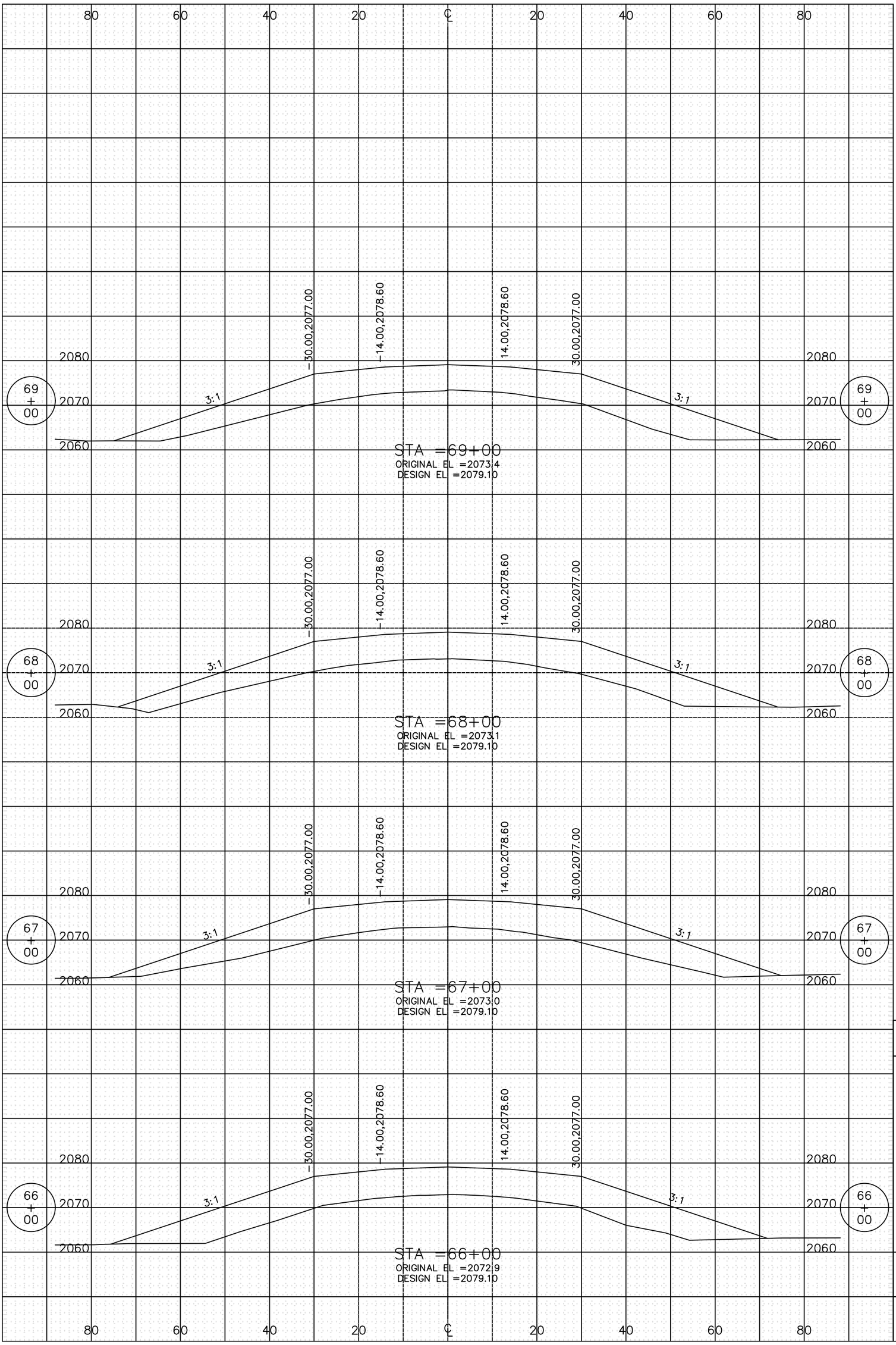

STATE	PROJECT NO.	SECTION NO.	SHEET NO.
ND	CER-1227(004)	200	17

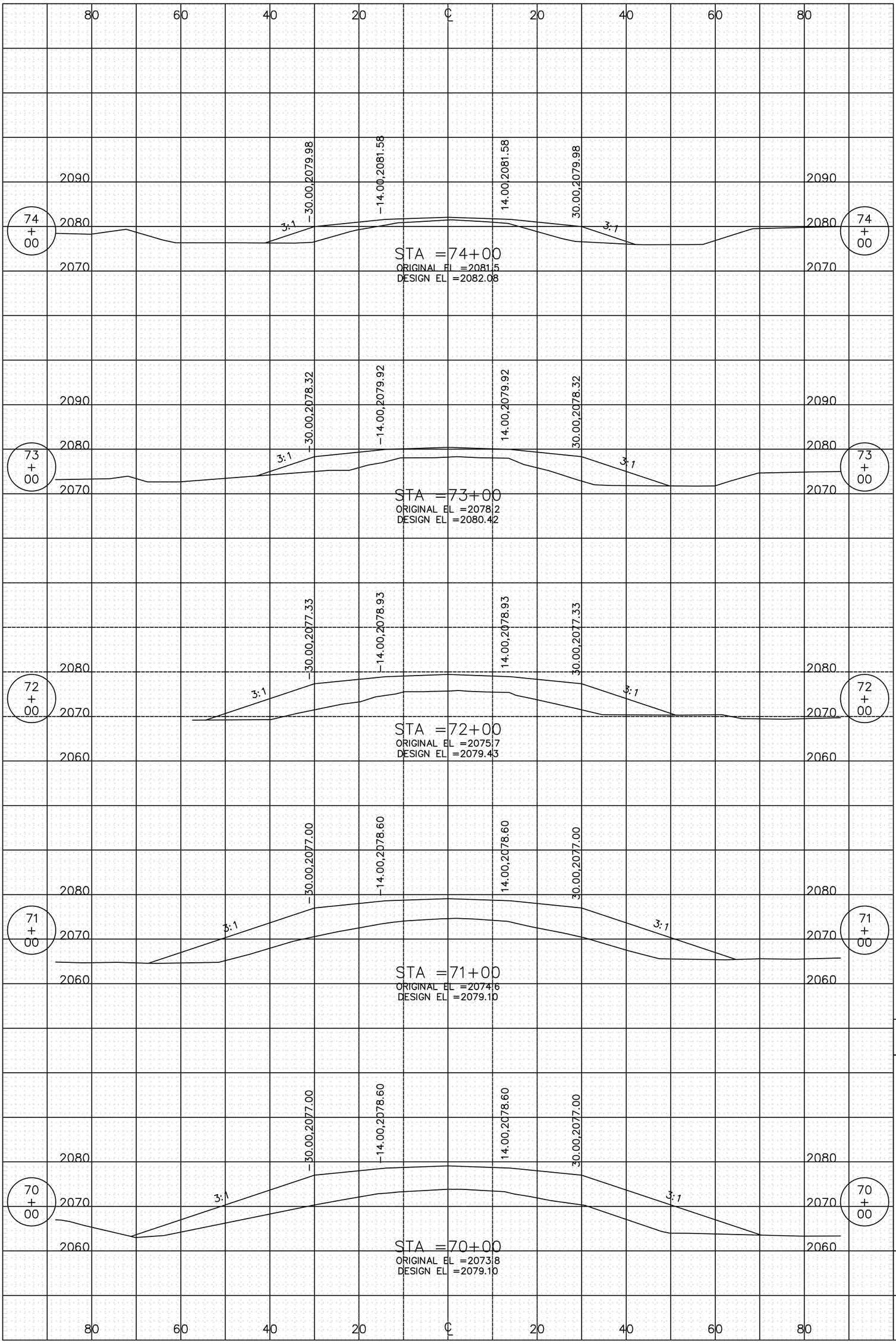

STATE	PROJECT NO.	SECTION NO.	SHEET NO.
ND	CER-1227(004)	200	18

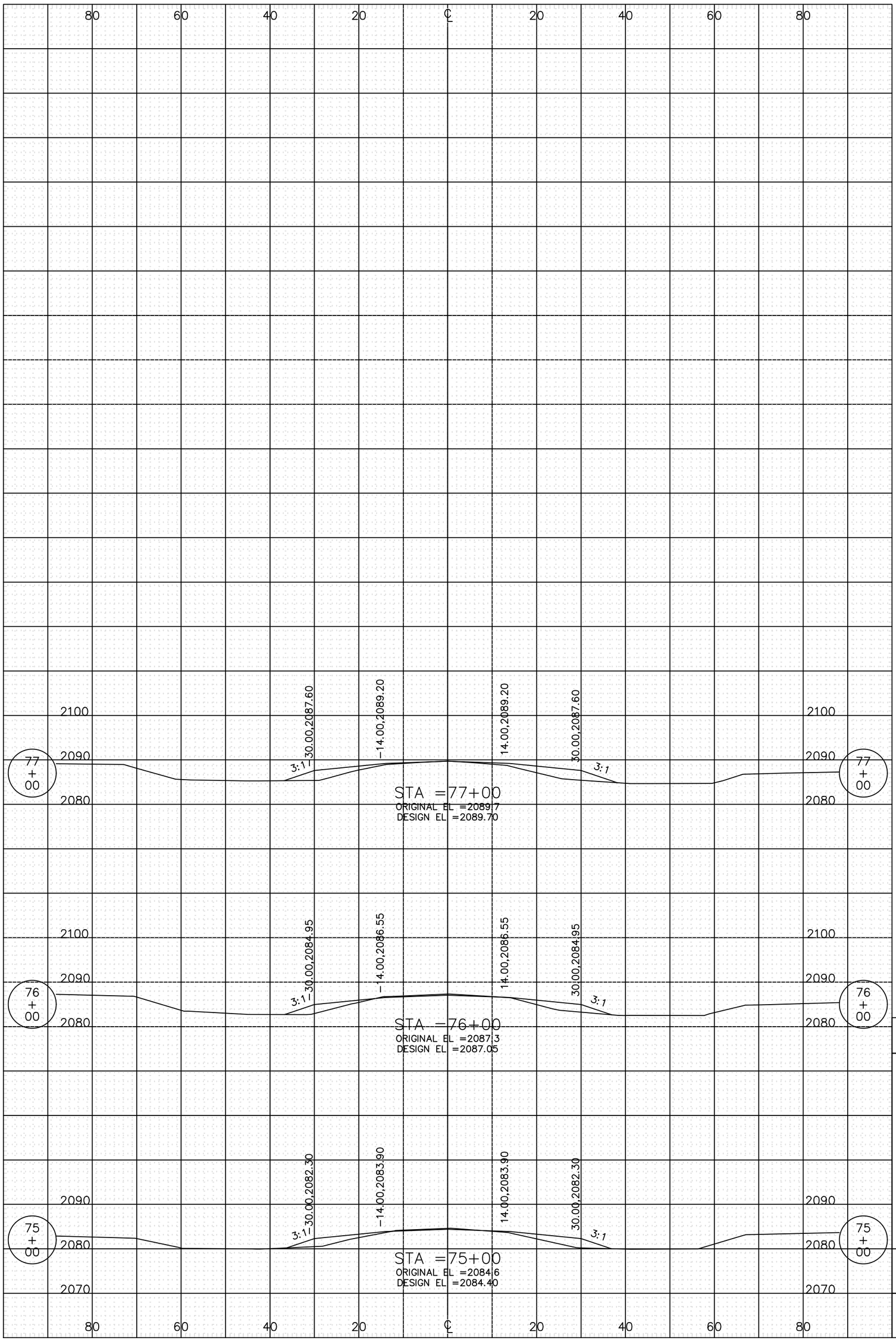

STATE	PROJECT NO.	SECTION NO.	SHEET NO.
ND	CER-1227(004)	200	19

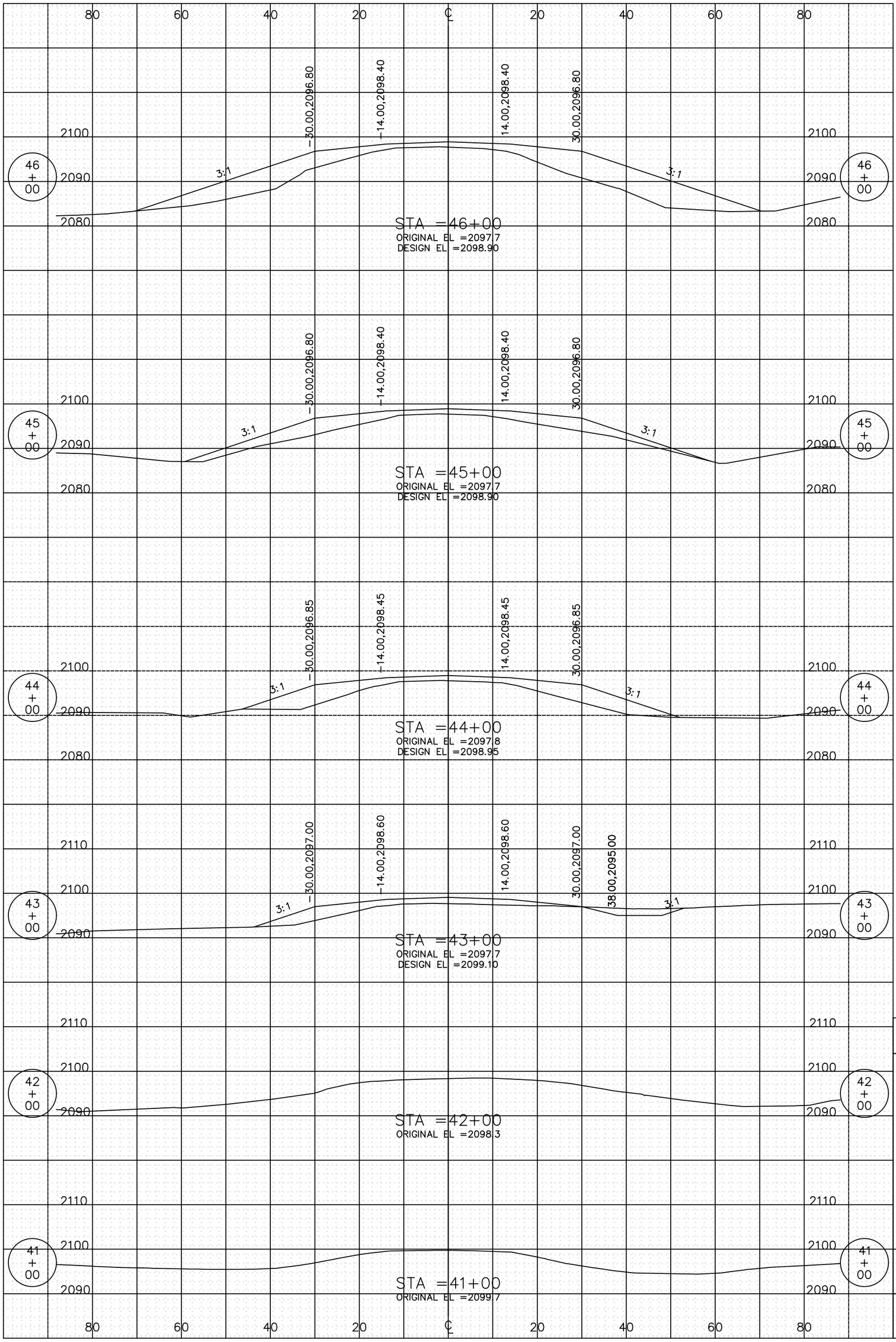

STATE	PROJECT NO.	SECTION NO.	SHEET NO.
ND	CER-1227(004)	200	20

STATE	PROJECT NO.	SECTION NO.	SHEET NO.
ND	CER-1227(004)	200	21

STATE	PROJECT NO.	SECTION NO.	SHEET NO.
ND	CER-1227(004)	200	22

STATE	PROJECT NO.	SECTION NO.	SHEET NO.
ND	CER-1227(004)	200	23

STATE	PROJECT NO.	SECTION NO.	SHEET NO.
ND	CER-1227(004)	200	24

STATE	PROJECT NO.	SECTION NO.	SHEET NO.
ND	CER-1227(004)	200	25

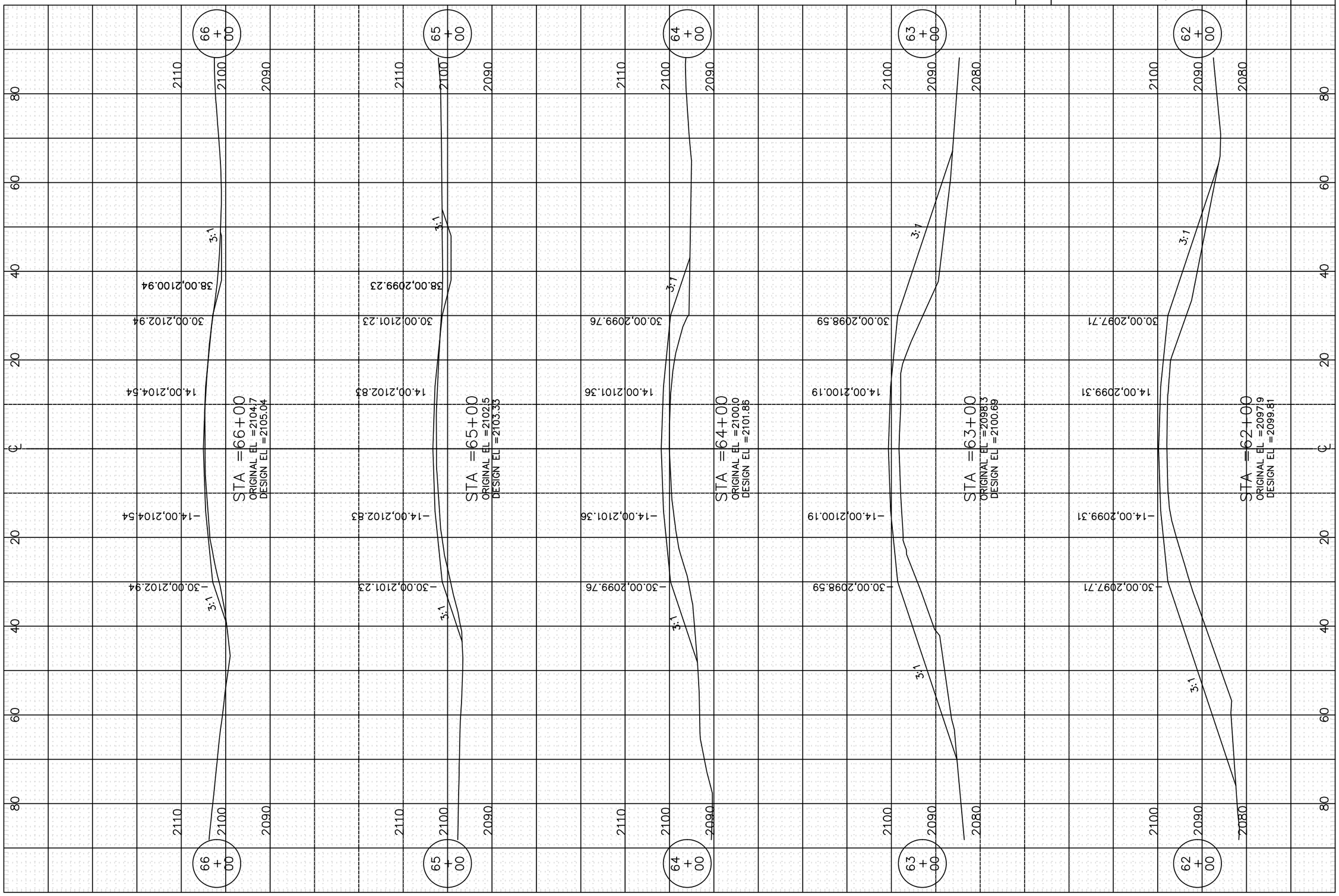

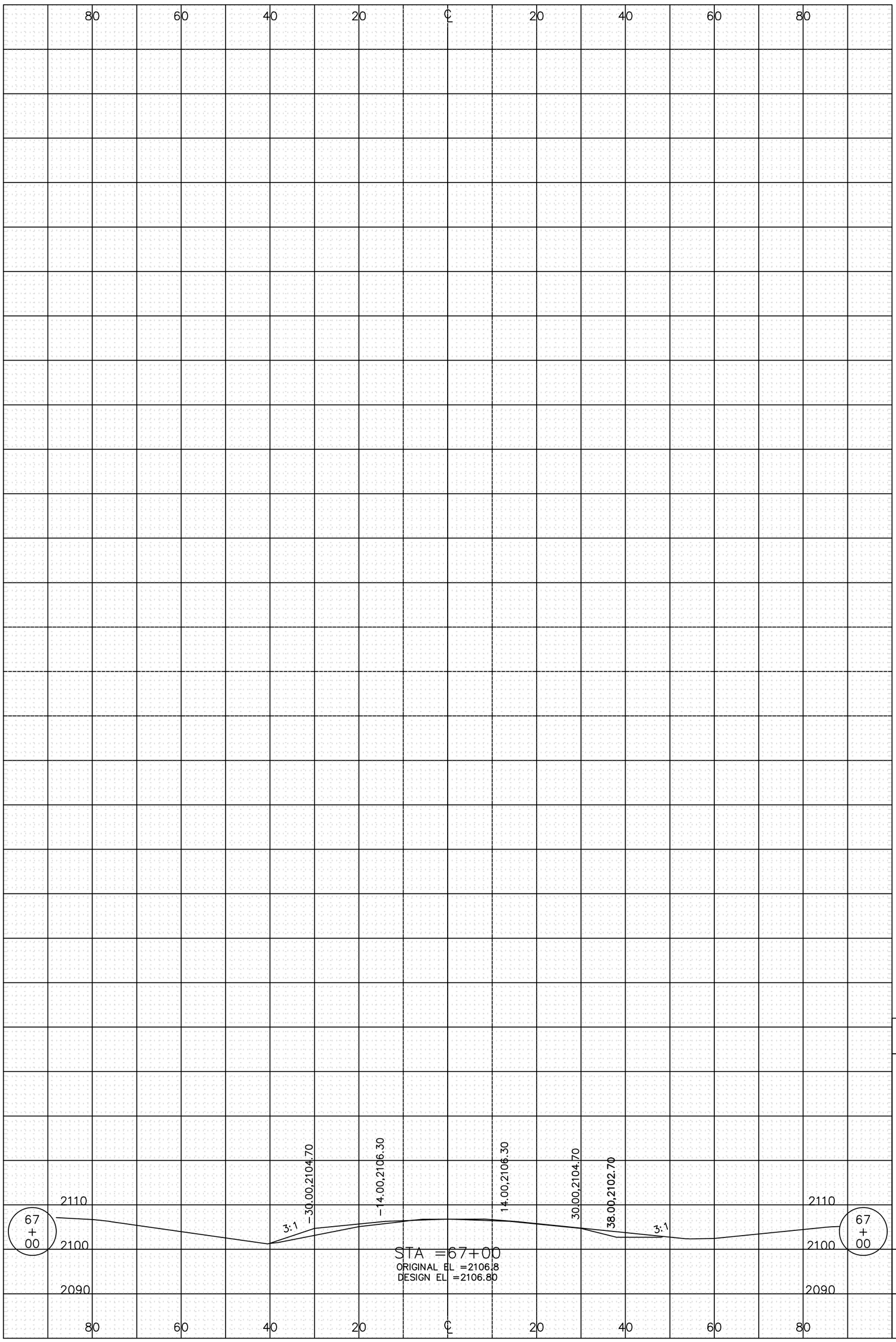

STATE	PROJECT NO.	SECTION NO.	SHEET NO.
ND	CER-1227(004)	200	26