STATE	PROJECT NO.	SECTION NO.	SHEET NO.
ND	SOIB-7-058(013)000	82	1

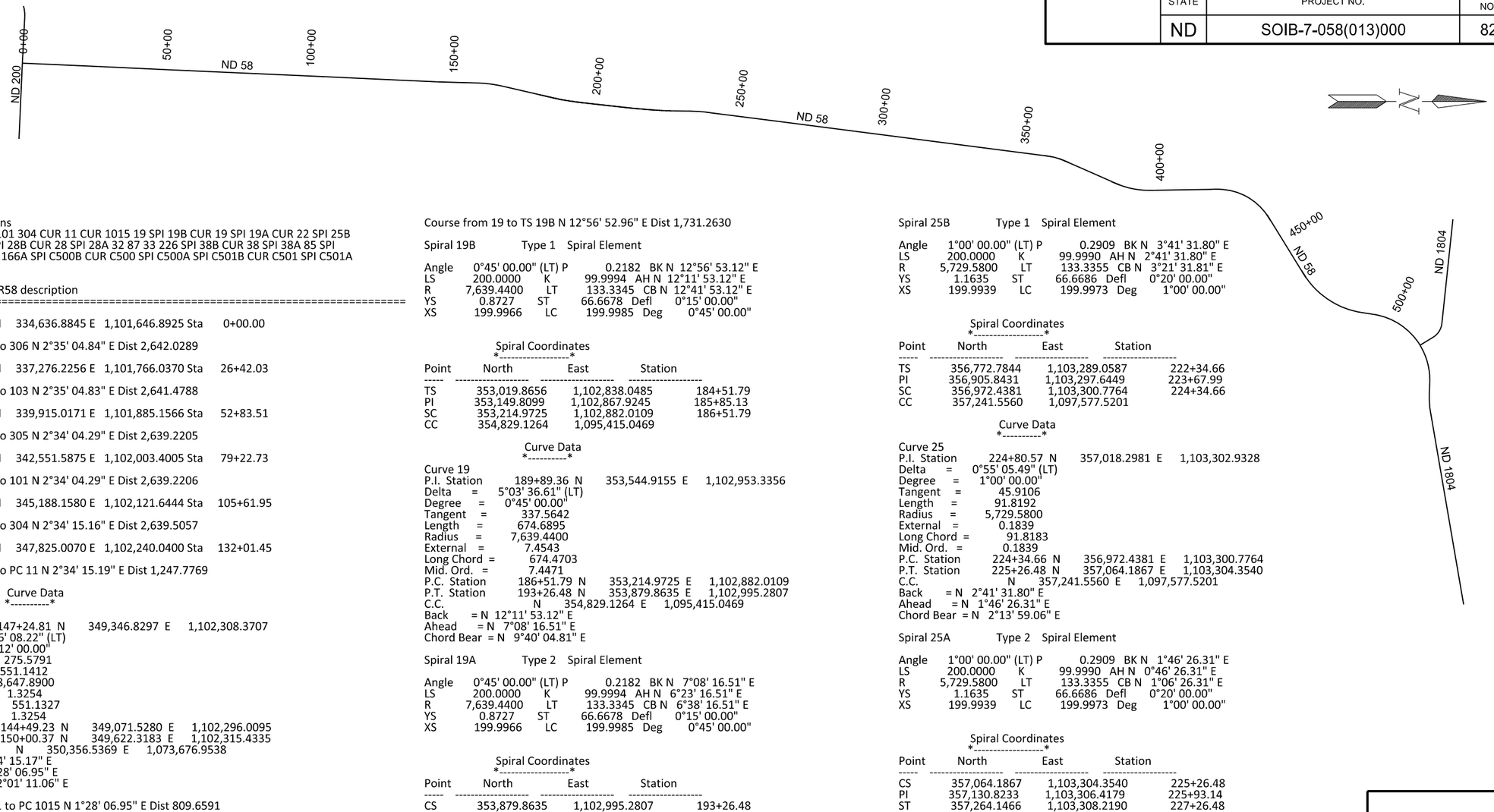

Chain PR58 contains
102 306 103 305 101 304 CUR 11 CUR 1015 19 SPI 19B CUR 19 SPI 19A CUR 22 SPI 25B CUR 25 SPI 25A SPI 28B CUR 28 SPI 28A 32 87 33 226 SPI 38B CUR 38 SPI 38A 85 SPI 166B CUR 166 SPI 166A SPI C500B CUR C500 SPI C500A SPI C501B CUR C501 SPI C501A CUR C502

Beginning chain PR58 description
==========

Point 102 N 334,636.8845 E 1,101,646.8925 Sta 0+00.00

Course from 102 to 306 N 2°35' 04.84" E Dist 2,642.0289

Point 306 N 337,276.2256 E 1,101,766.0370 Sta 26+42.03

Course from 306 to 103 N 2°35' 04.83" E Dist 2,641.4788

Point 103 N 339,915.0171 E 1,101,885.1566 Sta 52+83.51

Course from 103 to 305 N 2°34' 04.29" E Dist 2,639.2205

Point 305 N 342,551.5875 E 1,102,003.4005 Sta 79+22.73

Course from 305 to 101 N 2°34' 04.29" E Dist 2,639.2206

Point 101 N 345,188.1580 E 1,102,121.6444 Sta 105+61.95

Course from 101 to 304 N 2°34' 15.16" E Dist 2,639.5057

Point 304 N 347,825.0070 E 1,102,240.0400 Sta 132+01.45

Course from 304 to PC 11 N 2°34' 15.19" E Dist 1,247.7769

Curve Data

Curve 11
P.I. Station 147+24.81 N 349,346.8297 E 1,102,308.3707
Delta = 1°06' 08.22" (LT)
Degree = 0°12' 00.00"
Tangent = 275.5791
Length = 551.1412
Radius = 28,647.8900
External = 1.3254
Long Chord = 551.1327
Mid. Ord. = 1.3254
P.C. Station 144+49.23 N 349,071.5280 E 1,102,296.0095
P.T. Station 150+00.37 N 349,622.3183 E 1,102,315.4335
C.C. N 350,356.5369 E 1,073,676.9538
Back = N 2°34' 15.17" E
Ahead = N 1°28' 06.95" E
Chord Bear = N 2°01' 11.06" E

Course from PT 11 to PC 1015 N 1°28' 06.95" E Dist 809.6591

Curve Data

Curve 1015
P.I. Station 162+66.36 N 350,887.8933 E 1,102,347.8797
Delta = 11°28' 46.04" (RT)
Degree = 1°15' 43.28"
Tangent = 456.3318
Length = 909.6086
Radius = 4,540.0000
External = 22.8761
Long Chord = 908.0880
Mid. Ord. = 22.7615
P.C. Station 158+10.03 N 350,431.7114 E 1,102,336.1843
P.T. Station 167+19.64 N 351,332.6222 E 1,102,450.1289
C.C. N 350,315.3554 E 1,106,874.6930
Back = N 1°28' 06.95" E
Ahead = N 12°56' 53.00" E
Chord Bear = N 7°12' 29.98" E

End Region 1
Equation: Sta 167+19.64 (BK) = Sta 167+20.53 (AH) ----------
Begin Region 2

Point 19 N 351,332.6222 E 1,102,450.1289 Sta 167+20.53

Course from 19 to TS 19B N 12°56' 52.96" E Dist 1,731.2630

Spiral 19B Type 1 Spiral Element

Angle 0°45' 00.00" (LT) P 0.2182 BK N 12°56' 53.12" E
LS 200.0000 K 99.9994 AH N 12°11' 53.12" E
R 7,639.4400 LT 133.3345 CB N 12°41' 53.12" E
YS 0.8727 ST 66.6678 Defl 0°15' 00.00"
XS 199.9966 LC 199.9985 Deg 0°45' 00.00"

Spiral Coordinates

Point	North	East	Station
TS	353,019.8656	1,102,838.0485	184+51.79
PI	353,149.8099	1,102,867.9245	185+85.13
SC	353,214.9725	1,102,882.0109	186+51.79
CC	354,829.1264	1,095,415.0469	

Curve Data

Curve 19
P.I. Station 189+89.36 N 353,544.9155 E 1,102,953.3356
Delta = 5°03' 36.61" (LT)
Degree = 0°45' 00.00"
Tangent = 337.5642
Length = 674.6895
Radius = 7,639.4400
External = 7.4543
Long Chord = 674.4703
Mid. Ord. = 7.4471
P.C. Station 186+51.79 N 353,214.9725 E 1,102,882.0109
P.T. Station 193+26.48 N 353,879.8635 E 1,102,995.2807
C.C. N 354,829.1264 E 1,095,415.0469
Back = N 12°11' 53.12" E
Ahead = N 7°08' 16.51" E
Chord Bear = N 9°40' 04.81" E

Spiral 19A Type 2 Spiral Element

Angle 0°45' 00.00" (LT) P 0.2182 BK N 7°08' 16.51" E
LS 200.0000 K 99.9994 AH N 6°23' 16.51" E
R 7,639.4400 LT 133.3345 CB N 6°38' 16.51" E
YS 0.8727 ST 66.6678 Defl 0°15' 00.00"
XS 199.9966 LC 199.9985 Deg 0°45' 00.00"

Spiral Coordinates

Point	North	East	Station
CS	353,879.8635	1,102,995.2807	193+26.48
PI	353,946.0146	1,103,003.5647	193+93.15
ST	354,078.5213	1,103,018.3994	195+26.48
CC	354,829.1264	1,095,415.0469	

Course from ST 19A to PC 22 N 6°23' 16.51" E Dist 1,514.6130

Curve Data

Curve 22
P.I. Station 215+80.35 N 356,119.6324 E 1,103,246.9109
Delta = 2°41' 44.70" (LT)
Degree = 0°15' 00.00"
Tangent = 539.2497
Length = 1,078.3004
Radius = 22,918.3120
External = 6.3432
Long Chord = 1,078.2009
Mid. Ord. = 6.3414
P.C. Station 210+41.10 N 355,583.7307 E 1,103,186.9143
P.T. Station 221+19.40 N 356,657.7628 E 1,103,281.6364
C.C. N 358,133.6080 E 1,080,410.8929
Back = N 6°23' 16.51" E
Ahead = N 3°41' 31.80" E
Chord Bear = N 5°02' 24.16" E

Course from PT 22 to TS 25B N 3°41' 31.80" E Dist 115.2608

Spiral 25B Type 1 Spiral Element

Angle 1°00' 00.00" (LT) P 0.2909 BK N 3°41' 31.80" E
LS 200.0000 K 99.9990 AH N 2°41' 31.80" E
R 5,729.5800 LT 133.3355 CB N 3°21' 31.81" E
YS 1.1635 ST 66.6686 Defl 0°20' 00.00"
XS 199.9939 LC 199.9973 Deg 1°00' 00.00"

Spiral Coordinates

Point	North	East	Station
TS	356,772.7844	1,103,289.0587	222+34.66
PI	356,905.8431	1,103,297.6449	223+67.99
SC	356,972.4381	1,103,300.7764	224+34.66
CC	357,241.5560	1,097,577.5201	

Curve Data

Curve 25
P.I. Station 224+80.57 N 357,018.2981 E 1,103,302.9328
Delta = 0°55' 05.49" (LT)
Degree = 1°00' 00.00"
Tangent = 45.9106
Length = 91.8192
Radius = 5,729.5800
External = 0.1839
Long Chord = 91.8183
Mid. Ord. = 0.1839
P.C. Station 224+34.66 N 356,972.4381 E 1,103,300.7764
P.T. Station 225+26.48 N 357,064.1867 E 1,103,304.3540
C.C. N 357,241.5560 E 1,097,577.5201
Back = N 2°41' 31.80" E
Ahead = N 1°46' 26.31" E
Chord Bear = N 2°13' 59.06" E

Spiral 25A Type 2 Spiral Element

Angle 1°00' 00.00" (LT) P 0.2909 BK N 1°46' 26.31" E
LS 200.0000 K 99.9990 AH N 0°46' 26.31" E
R 5,729.5800 LT 133.3355 CB N 1°06' 26.31" E
YS 1.1635 ST 66.6686 Defl 0°20' 00.00"
XS 199.9939 LC 199.9973 Deg 1°00' 00.00"

Spiral Coordinates

Point	North	East	Station
CS	357,064.1867	1,103,304.3540	225+26.48
PI	357,130.8233	1,103,306.4179	225+93.14
ST	357,264.1466	1,103,308.2190	227+26.48
CC	357,241.5560	1,097,577.5201	

Course from ST 25A to TS 28B N 0°46' 26.31" E Dist 466.4446

Spiral 28B Type 1 Spiral Element

Angle 1°00' 00.00" (RT) P 0.2909 BK N 0°46' 26.31" E
LS 200.0000 K 99.9990 AH N 1°46' 26.31" E
R 5,729.5800 LT 133.3355 CB N 1°06' 26.31" E
YS 1.1635 ST 66.6686 Defl 0°20' 00.00"
XS 199.9939 LC 199.9973 Deg 1°00' 00.00"

Spiral Coordinates

Point	North	East	Station
TS	357,730.5487	1,103,314.5197	231+92.92
PI	357,863.8720	1,103,316.3208	233+26.26
SC	357,930.5087	1,103,318.3847	233+92.92
CC	357,753.1393	1,109,045.2186	

This document was originally issued and sealed by William Doerr, Registration Number PE- 7113, on 12/04/15 and the original document is stored at the North Dakota Department of Transportation

Proposed Horizontal Alignment Description

ND 58

Jct 200 to Jct 1804

STATE	PROJECT NO.	SECTION NO.	SHEET NO.
ND	SOIB-7-058(013)000	82	2

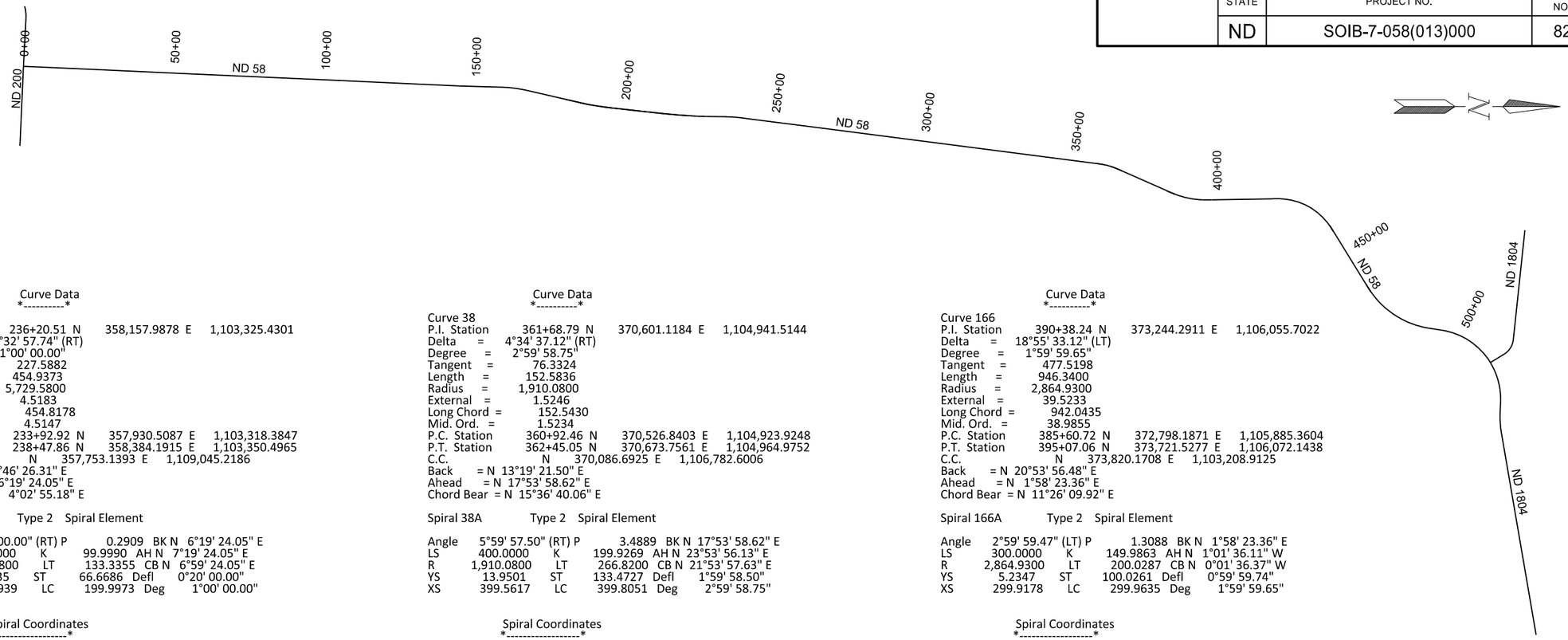

Curve Data

Curve 28
P.I. Station 236+20.51 N 358,157.9878 E 1,103,325.4301
Delta = 4°32' 57.74" (RT)
Degree = 1°00' 00.00"
Tangent = 227.5882
Length = 454.9373
Radius = 5,729.5800
External = 4.5183
Long Chord = 454.8178
Mid. Ord. = 4.5147
P.C. Station 233+92.92 N 357,930.5087 E 1,103,318.3847
P.T. Station 238+47.86 N 358,384.1915 E 1,103,350.4965
C.C. N 357,753.1393 E 1,109,045.2186
Back = N 1°46' 26.31" E
Ahead = N 6°19' 24.05" E
Chord Bear = N 4°02' 55.18" E

Spiral 28A Type 2 Spiral Element

Angle 1°00' 00.00" (RT) P 0.2909 BK N 6°19' 24.05" E
LS 200.0000 K 99.9990 AH N 7°19' 24.05" E
R 5,729.5800 LT 133.3355 CB N 6°59' 24.05" E
YS 1.1635 ST 66.6686 Defl 0°20' 00.00"
XS 199.9939 LC 199.9973 Deg 1°00' 00.00"

Spiral Coordinates

Point	North	East	Station
CS	358,384.1915	1,103,350.4965	238+47.86
PI	358,450.4545	1,103,357.8393	239+14.53
ST	358,582.7022	1,103,374.8354	240+47.86
CC	357,753.1393	1,109,045.2186	

Course from ST 28A to 32 N 7°19' 24.05" E Dist 2,382.9513

Point 32 N 360,946.2148 E 1,103,678.5873 Sta 264+30.81

Course from 32 to 87 N 7°19' 23.98" E Dist 2,652.2188

Point 87 N 363,576.7985 E 1,104,016.6615 Sta 290+83.03

Course from 87 to 33 N 7°19' 24.07" E Dist 2,657.5925

Point 33 N 366,212.7119 E 1,104,355.4218 Sta 317+40.62

Course from 33 to 226 N 7°19' 24.02" E Dist 2,646.8012

Point 226 N 368,837.9221 E 1,104,692.8060 Sta 343+87.42

Course from 226 to TS 38B N 7°19' 23.92" E Dist 1,305.0397

Spiral 38B Type 1 Spiral Element

Angle 5°59' 57.50" (RT) P 3.4889 BK N 7°19' 23.99" E
LS 400.0000 K 199.9269 AH N 13°19' 21.50" E
R 1,910.0800 LT 266.8200 CB N 9°19' 22.49" E
YS 13.9501 ST 133.4727 Defl 1°59' 58.50"
XS 399.5617 LC 399.8051 Deg 2°59' 58.75"

Spiral Coordinates

Point	North	East	Station
TS	370,132.3162	1,104,859.1570	356+92.46
PI	370,396.9596	1,104,893.1682	359+59.28
SC	370,526.8403	1,104,923.9248	360+92.46
CC	370,086.6925	1,106,782.6006	

Curve Data

Curve 38
P.I. Station 361+68.79 N 370,601.1184 E 1,104,941.5144
Delta = 4°34' 37.12" (RT)
Degree = 2°59' 58.75"
Tangent = 76.3324
Length = 152.5836
Radius = 1,910.0800
External = 1.5246
Long Chord = 152.5430
Mid. Ord. = 1.5234
P.C. Station 360+92.46 N 370,526.8403 E 1,104,923.9248
P.T. Station 362+45.05 N 370,673.7561 E 1,104,964.9752
C.C. N 370,086.6925 E 1,106,782.6006
Back = N 13°19' 21.50" E
Ahead = N 17°53' 58.62" E
Chord Bear = N 15°36' 40.06" E

Spiral 38A Type 2 Spiral Element

Angle 5°59' 57.50" (RT) P 3.4889 BK N 17°53' 58.62" E
LS 400.0000 K 199.9269 AH N 23°53' 56.13" E
R 1,910.0800 LT 266.8200 CB N 21°53' 57.63" E
YS 13.9501 ST 133.4727 Defl 1°59' 58.50"
XS 399.5617 LC 399.8051 Deg 2°59' 58.75"

Spiral Coordinates

Point	North	East	Station
CS	370,673.7561	1,104,964.9752	362+45.05
PI	370,800.7682	1,105,005.9981	363+78.52
ST	371,044.7115	1,105,114.0934	366+45.05
CC	370,086.6925	1,106,782.6006	

Course from ST 38A to 85 N 23°53' 56.13" E Dist 432.5558

Point 85 N 371,440.1806 E 1,105,289.3323 Sta 370+77.60

Course from 85 to TS 166B N 23°53' 55.95" E Dist 1,183.1209

Spiral 166B Type 1 Spiral Element

Angle 2°59' 59.47" (LT) P 1.3088 BK N 23°53' 55.95" E
LS 300.0000 K 149.9863 AH N 20°53' 56.48" E
R 2,864.9300 LT 200.0287 CB N 22°53' 56.21" E
YS 5.2347 ST 100.0261 Defl 0°59' 59.74"
XS 299.9178 LC 299.9635 Deg 1°59' 59.65"

Spiral Coordinates

Point	North	East	Station
TS	372,521.8630	1,105,768.6425	382+60.72
PI	372,704.7416	1,105,849.6789	384+60.75
SC	372,798.1871	1,105,885.3604	385+60.72
CC	373,820.1708	1,103,208.9125	

Curve Data

Curve 166
P.I. Station 390+38.24 N 373,244.2911 E 1,106,055.7022
Delta = 18°55' 33.12" (LT)
Degree = 1°59' 59.65"
Tangent = 477.5198
Length = 946.3400
Radius = 2,864.9300
External = 39.5233
Long Chord = 942.0435
Mid. Ord. = 38.9855
P.C. Station 385+60.72 N 372,798.1871 E 1,105,885.3604
P.T. Station 395+07.06 N 373,721.5277 E 1,106,072.1438
C.C. N 373,820.1708 E 1,103,208.9125
Back = N 20°53' 56.48" E
Ahead = N 1°58' 23.36" E
Chord Bear = N 11°26' 09.92" E

Spiral 166A Type 2 Spiral Element

Angle 2°59' 59.47" (LT) P 1.3088 BK N 1°58' 23.36" E
LS 300.0000 K 149.9863 AH N 1°01' 36.11" W
R 2,864.9300 LT 200.0287 CB N 0°01' 36.37" W
YS 5.2347 ST 100.0261 Defl 0°59' 59.74"
XS 299.9178 LC 299.9635 Deg 1°59' 59.65"

Spiral Coordinates

Point	North	East	Station
CS	373,721.5277	1,106,072.1438	395+07.06
PI	373,821.4945	1,106,075.5878	396+07.09
ST	374,021.4911	1,106,072.0037	398+07.06
CC	373,820.1708	1,103,208.9125	

Course from ST 166A to TS C500B N 1°01' 36.11" W Dist 2,037.6663

Spiral C500B Type 1 Spiral Element

Angle 3°17' 58.88" (RT) P 1.1517 BK N 1°01' 36.11" W
LS 240.0000 K 119.9867 AH N 2°16' 22.76" E
R 2,083.6800 LT 160.0278 CB N 0°04' 23.40" E
YS 4.6061 ST 80.0253 Defl 1°05' 59.51"
XS 239.9204 LC 239.9646 Deg 2°44' 59.06"

Spiral Coordinates

Point	North	East	Station
TS	376,058.8303	1,106,035.4921	418+44.73
PI	376,218.8324	1,106,032.6247	420+04.76
SC	376,298.7947	1,106,035.7986	420+84.73
CC	376,216.1544	1,108,117.8391	

This document was originally issued and sealed by William Doerr, Registration Number PE- 7113, on 12/04/15 and the original document is stored at the North Dakota Department of Transportation

Proposed Horizontal Alignment Description

ND 58

Jct 200 to Jct 1804

STATE	PROJECT NO.	SECTION NO.	SHEET NO.
ND	SOIB-7-058(013)000	82	3

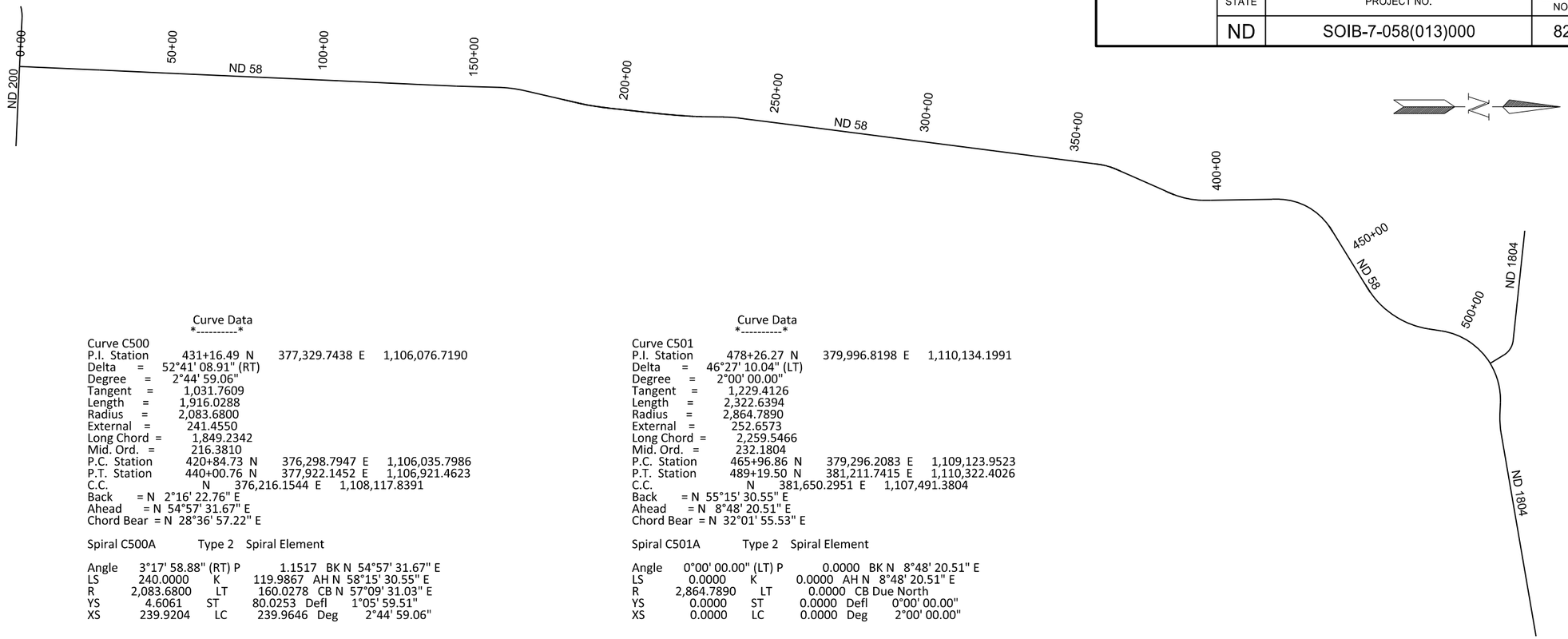

Curve Data

Curve C500
P.I. Station 431+16.49 N 377,329.7438 E 1,106,076.7190
Delta = 52°41' 08.91" (RT)
Degree = 2°44' 59.06"
Tangent = 1,031.7609
Length = 1,916.0288
Radius = 2,083.6800
External = 241.4550
Long Chord = 1,849.2342
Mid. Ord. = 216.3810
P.C. Station 420+84.73 N 376,298.7947 E 1,106,035.7986
P.T. Station 440+00.76 N 377,922.1452 E 1,106,921.4623
C.C. N 376,216.1544 E 1,108,117.8391
Back = N 2°16' 22.76" E
Ahead = N 54°57' 31.67" E
Chord Bear = N 28°36' 57.22" E

Spiral C500A Type 2 Spiral Element

Angle 3°17' 58.88" (RT) P 1.1517 BK N 54°57' 31.67" E
LS 240.0000 K 119.9867 AH N 58°15' 30.55" E
R 2,083.6800 LT 160.0278 CB N 57°09' 31.03" E
YS 4.6061 ST 80.0253 Defl 1°05' 59.51"
XS 239.9204 LC 239.9646 Deg 2°44' 59.06"

Spiral Coordinates

Point	North	East	Station
CS	377,922.1452	1,106,921.4623	440+00.76
PI	377,968.0930	1,106,986.9821	440+80.78
ST	378,052.2817	1,107,123.0746	442+40.76
CC	376,216.1544	1,108,117.8391	

Course from ST C500A to TS C501B N 58°15' 30.55" E Dist 2,056.1038

Spiral C501B Type 1 Spiral Element

Angle 3°00' 00.00" (LT) P 1.3089 BK N 58°15' 30.55" E
LS 300.0000 K 149.9863 AH N 55°15' 30.55" E
R 2,864.7890 LT 200.0287 CB N 57°15' 30.63" E
YS 5.2350 ST 100.0261 Defl 0°59' 59.92"
XS 299.9178 LC 299.9634 Deg 2°00' 00.00"

Spiral Coordinates

Point	North	East	Station
TS	379,133.9732	1,108,871.6472	462+96.86
PI	379,239.2059	1,109,041.7577	464+96.89
SC	379,296.2083	1,109,123.9523	465+96.86
CC	381,650.2951	1,107,491.3804	

Curve Data

Curve C501
P.I. Station 478+26.27 N 379,996.8198 E 1,110,134.1991
Delta = 46°27' 10.04" (LT)
Degree = 2°00' 00.00"
Tangent = 1,229.4126
Length = 2,322.6394
Radius = 2,864.7890
External = 252.6573
Long Chord = 2,259.5466
Mid. Ord. = 232.1804
P.C. Station 465+96.86 N 379,296.2083 E 1,109,123.9523
P.T. Station 489+19.50 N 381,211.7415 E 1,110,322.4026
C.C. N 381,650.2951 E 1,107,491.3804
Back = N 55°15' 30.55" E
Ahead = N 8°48' 20.51" E
Chord Bear = N 32°01' 55.53" E

Spiral C501A Type 2 Spiral Element

Angle 0°00' 00.00" (LT) P 0.0000 BK N 8°48' 20.51" E
LS 0.0000 K 0.0000 AH N 8°48' 20.51" E
R 2,864.7890 LT 0.0000 CB Due North
YS 0.0000 ST 0.0000 Defl 0°00' 00.00"
XS 0.0000 LC 0.0000 Deg 2°00' 00.00"

Spiral Coordinates

Point	North	East	Station
CS	381,211.7415	1,110,322.4026	489+19.50
PI	381,211.7415	1,110,322.4026	489+19.50
ST	381,211.7415	1,110,322.4026	489+19.50
CC	381,650.2951	1,107,491.3804	

Course from ST C501A to PC C502 N 8°48' 20.51" E Dist 435.3193

Curve Data

Curve C502
P.I. Station 504+18.93 N 382,693.4937 E 1,110,551.9408
Delta = 49°39' 20.54" (RT)
Degree = 2°29' 28.04"
Tangent = 1,064.1063
Length = 1,993.3078
Radius = 2,300.0000
External = 234.2301
Long Chord = 1,931.5093
Mid. Ord. = 212.5810
P.C. Station 493+54.82 N 381,641.9298 E 1,110,389.0430
P.T. Station 513+48.13 N 383,250.0988 E 1,111,458.8658
C.C. N 381,289.8364 E 1,112,661.9333
Back = N 8°48' 20.51" E
Ahead = N 58°27' 41.05" E
Chord Bear = N 33°38' 00.78" E

==========
Ending chain PR58 description

This document was originally issued and sealed by William Doerr, Registration Number PE- 7113, on 12/04/15 and the original document is stored at the North Dakota Department of Transportation

Proposed Horizontal Alignment Description

ND 58

Jct 200 to Jct 1804

STATE	PROJECT NO.	SECTION NO.	SHEET NO.
ND	SOIB-7-058(013)000	82	4

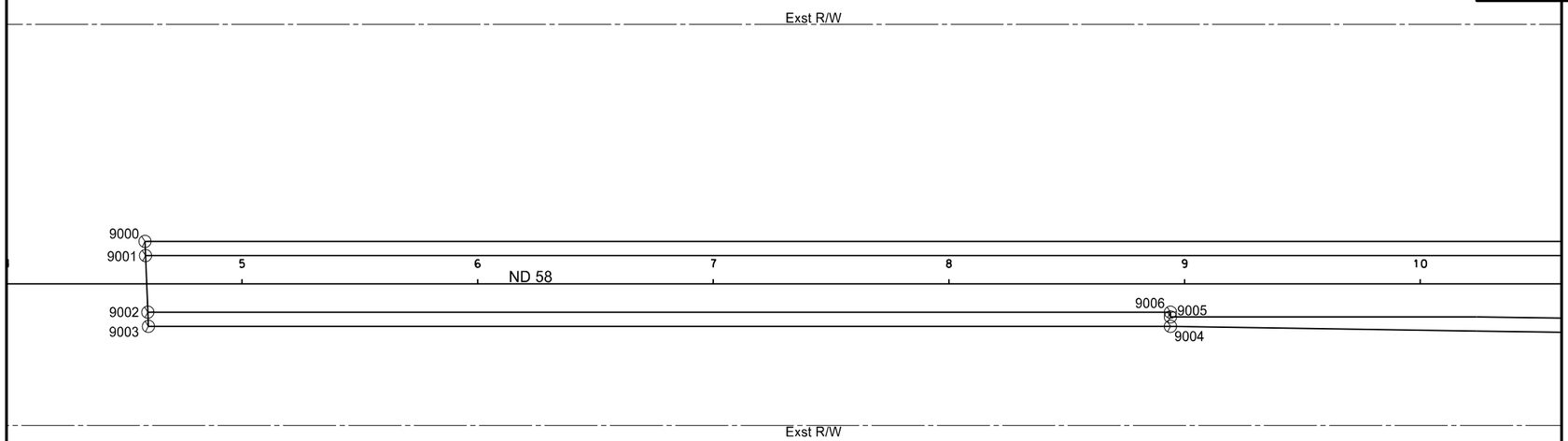

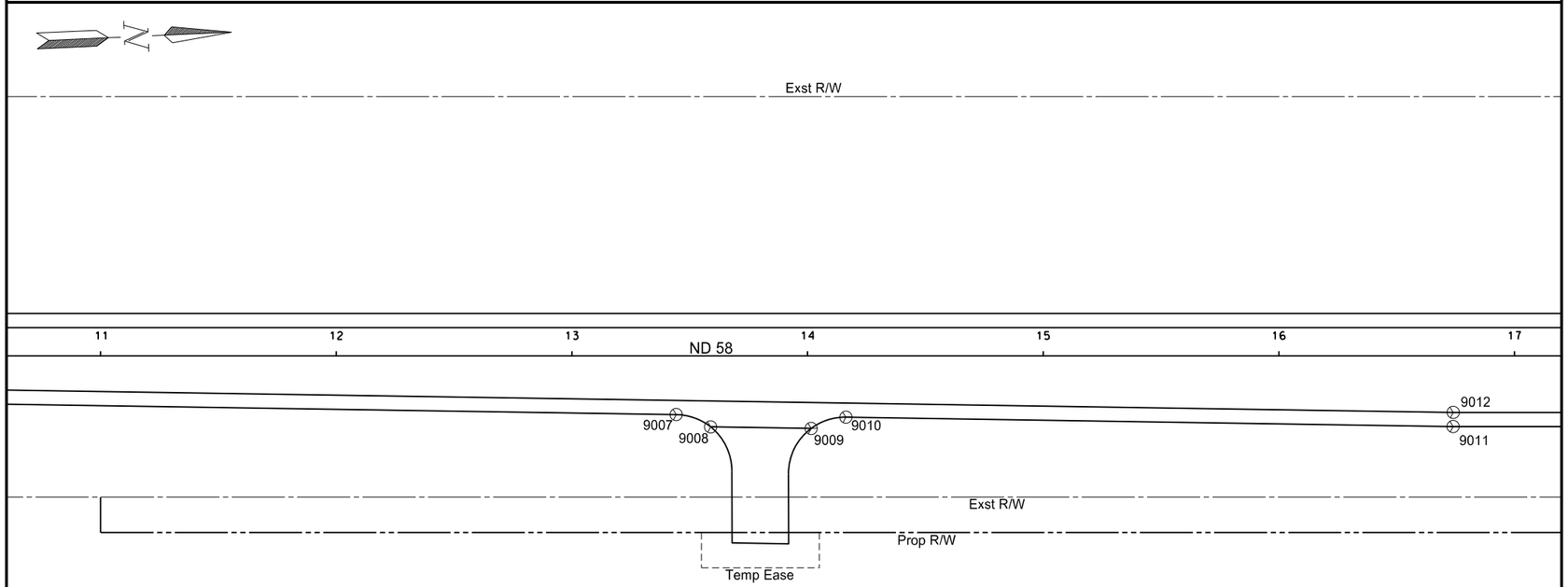

Point	North	East	Station	Offset
9000	335096.0450	1101649.6015	4+58.82	-18.00
9001	335096.0142	1101655.6062	4+59.06	-12.00
9002	335095.8910	1101679.6251	4+60.02	12.00
9003	335095.8602	1101685.6298	4+60.26	18.00
9004	335529.1633	1101705.1899	8+94.00	18.00
9005	335529.3436	1101701.1943	8+94.00	14.00
9006	335529.4339	1101699.1960	8+94.00	12.00
9007	335978.6582	1101732.4158	13+44.27	24.93
9008	335992.9920	1101738.2931	13+58.85	30.15
9009	336035.5967	1101740.8736	14+01.53	30.81
9010	336050.5350	1101736.7692	14+16.27	26.04
9011	336307.7825	1101752.3503	16+73.95	30.00
9012	336308.0992	1101746.3585	16+74.00	24.00

This document was originally issued and sealed by William Doerr, Registration Number PE- 7113, on 12/04/15 and the original document is stored at the North Dakota Department of Transportation

Survey Data Points

ND 58

Jct 200 to Jct 1804

STATE	PROJECT NO.	SECTION NO.	SHEET NO.
ND	SOIB-7-058(013)000	82	5

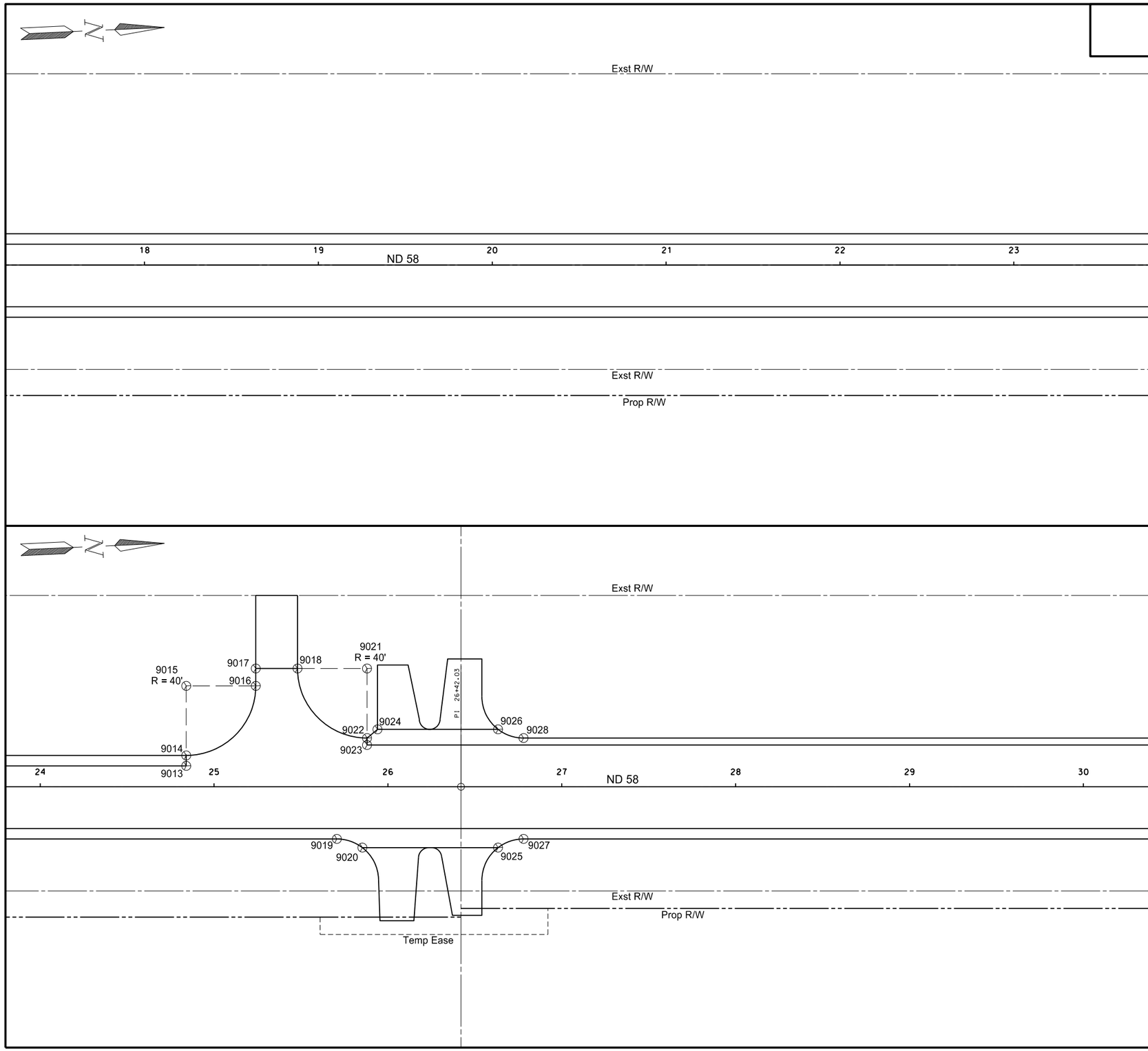

Point	North	East	Station	Offset
9013	337119.1692	1101740.9289	24+84.00	-18.00
9014	337118.8986	1101746.9228	24+84.00	-12.00
9015	337120.9730	1101700.9696	24+84.00	-58.00
9016	337160.9323	1101702.7734	25+24.00	-58.00
9017	337161.3833	1101692.7836	25+24.00	-68.00
9018	337185.3588	1101693.8659	25+48.00	-68.00
9019	337203.5440	1101792.7866	25+70.63	30.00
9020	337217.9665	1101798.4427	25+85.29	35.00
9021	337225.3182	1101695.6697	25+88.00	-68.00
9022	337223.5143	1101735.6290	25+88.00	-28.00
9023	337223.3339	1101739.6249	25+88.00	-24.00
9024	337229.7337	1101730.9047	25+94.00	-33.00
9025	337295.9338	1101801.9623	26+63.34	35.00
9026	337299.0138	1101734.0321	26+63.35	-33.00
9027	337310.8072	1101797.6286	26+78.00	30.00
9028	337313.4363	1101739.6882	26+78.01	-28.00

This document was originally issued and sealed by William Doerr, Registration Number PE- 7113, on 12/04/15 and the original document is stored at the North Dakota Department of Transportation

Survey Data Points

ND 58

Jct 200 to Jct 1804

STATE	PROJECT NO.	SECTION NO.	SHEET NO.
ND	SOIB-7-058(013)000	82	6

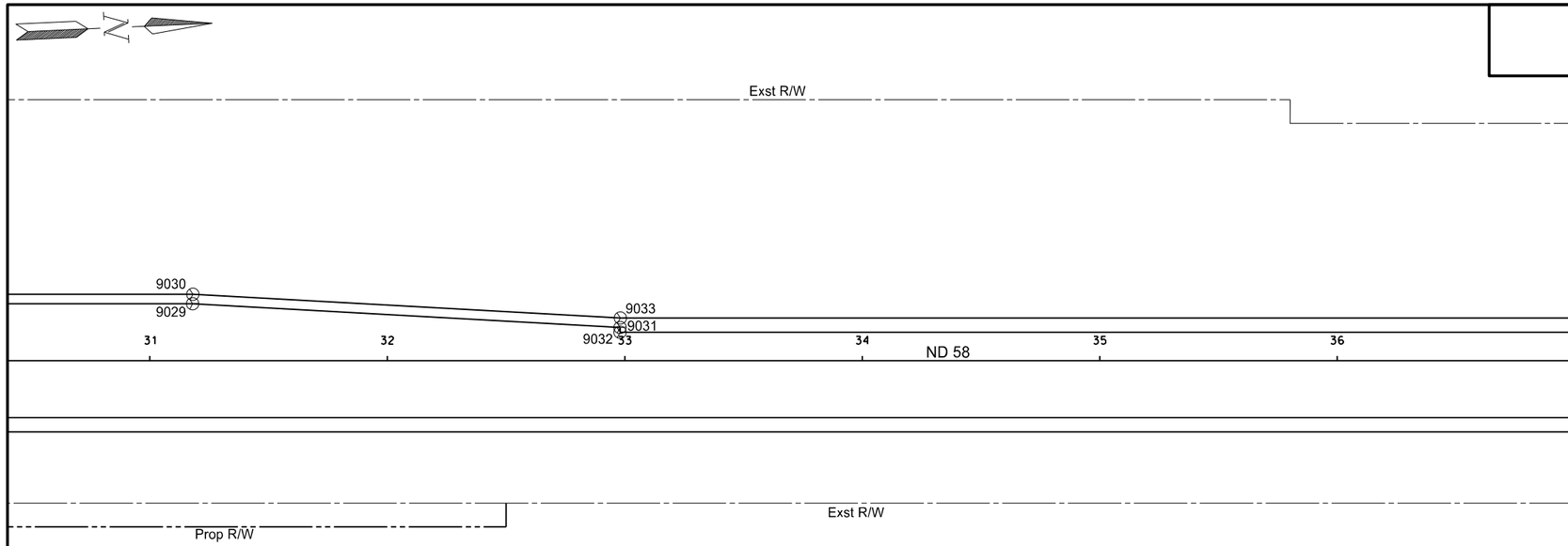

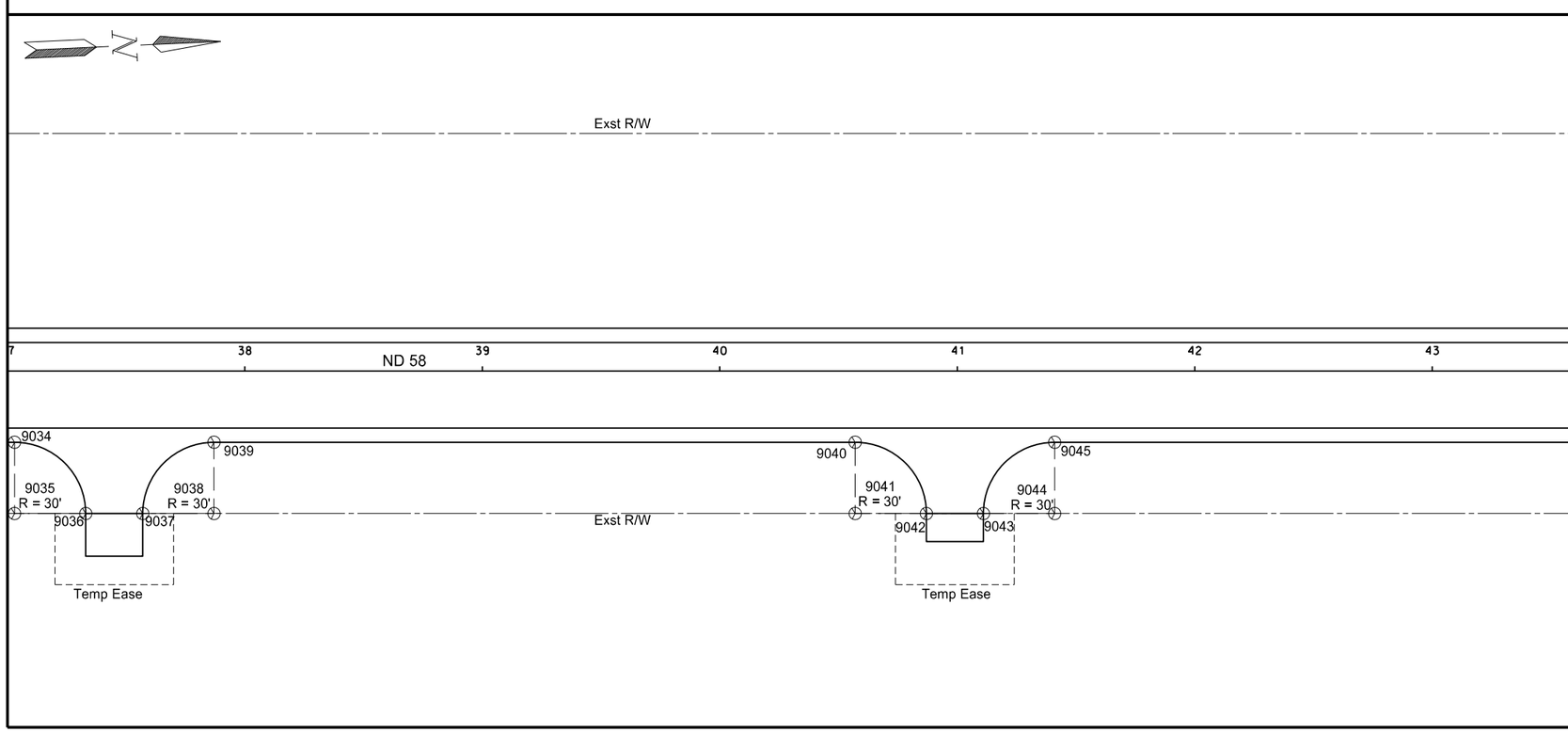

Point	North	East	Station	Offset
9029	337752.7948	1101763.5257	31+18.00	-24.00
9030	337753.0860	1101759.5348	31+18.11	-28.00
9031	337932.1607	1101781.6328	32+98.00	-14.00
9032	337932.0705	1101783.6307	32+98.00	-12.00
9033	337932.4520	1101777.6419	32+98.11	-18.00
9034	338334.7644	1101843.8518	37+03.00	30.00
9035	338333.4116	1101873.8213	37+03.00	60.00
9036	338363.3810	1101875.1742	37+33.00	60.00
9037	338387.3566	1101876.2565	37+57.00	60.00
9038	338417.3261	1101877.6093	37+87.00	60.00
9039	338418.6790	1101847.6399	37+87.00	30.00
9040	338688.4043	1101859.8157	40+57.00	30.00
9041	338687.0514	1101889.7852	40+57.00	60.00
9042	338717.0209	1101891.1381	40+87.00	60.00
9043	338740.9965	1101892.2204	41+11.00	60.00
9044	338770.9660	1101893.5733	41+41.00	60.00
9045	338772.3188	1101863.6038	41+41.00	30.00

This document was originally issued and sealed by William Doerr, Registration Number PE- 7113, on 12/04/15 and the original document is stored at the North Dakota Department of Transportation

Survey Data Points

ND 58

Jct 200 to Jct 1804

STATE	PROJECT NO.	SECTION NO.	SHEET NO.
ND	SOIB-7-058(013)000	82	7

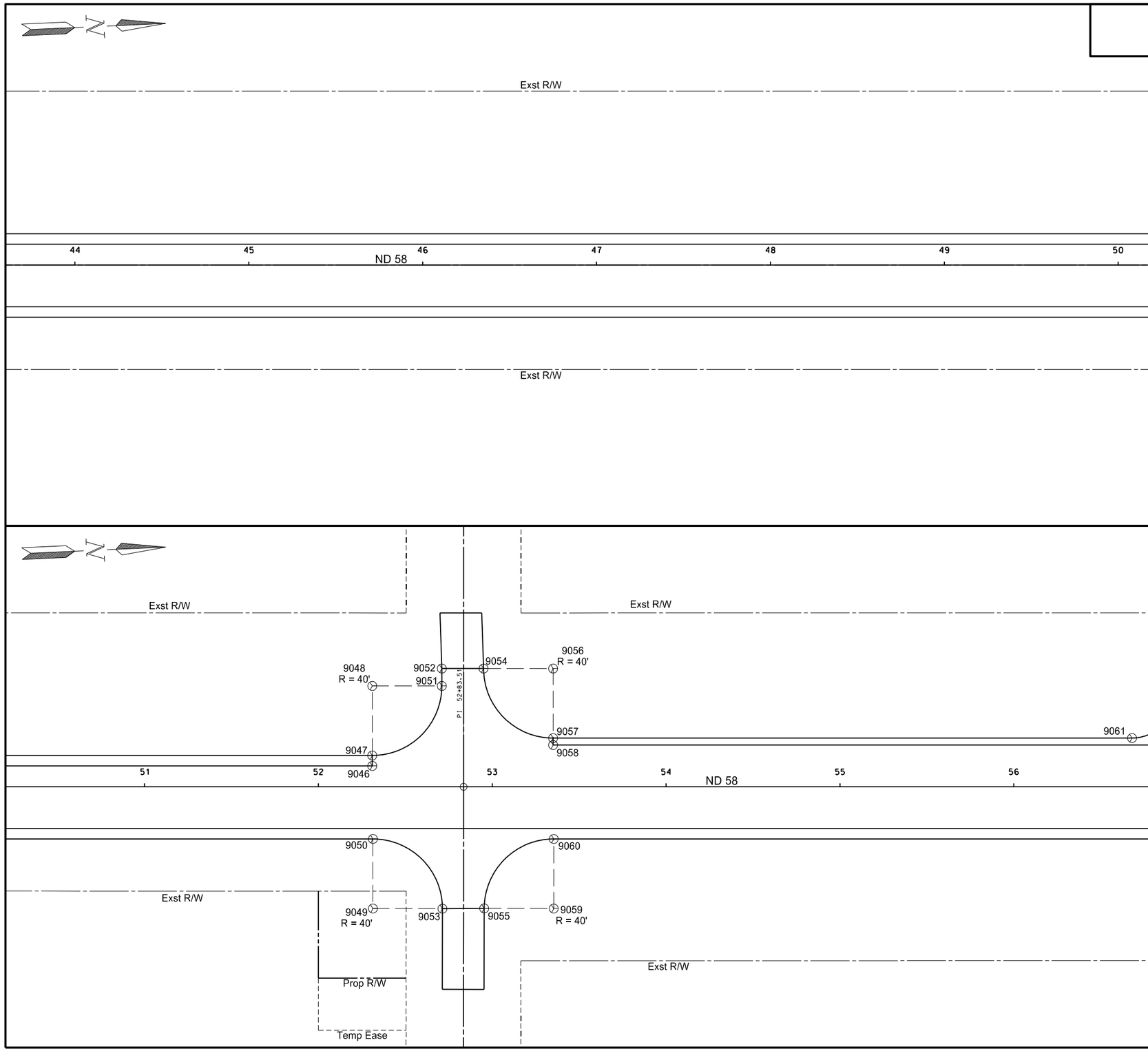

Point	North	East	Station	Offset
9046	339863.1040	1101870.8009	52+31.00	-12.00
9047	339863.3746	1101864.8070	52+31.00	-18.00
9048	339865.1784	1101824.8477	52+31.00	-58.00
9049	339859.7906	1101952.7349	52+31.38	70.00
9050	339861.6028	1101912.7759	52+31.39	30.00
9051	339905.1377	1101826.6516	52+71.00	-58.00
9052	339905.5893	1101816.6466	52+71.00	-68.02
9053	339899.7462	1101954.6171	52+71.38	70.08
9054	339929.5649	1101817.7289	52+95.02	-68.01
9055	339923.7300	1101955.5273	52+95.36	69.91
9056	339969.5242	1101819.5328	53+35.02	-68.00
9057	339967.7321	1101859.4926	53+35.02	-28.00
9058	339967.5529	1101863.4886	53+35.02	-24.00
9059	339963.6857	1101957.4096	53+35.36	70.00
9060	339965.4778	1101917.4498	53+35.36	30.00
9061	340300.3778	1101874.4110	56+68.00	-28.00

This document was originally issued and sealed by William Doerr, Registration Number PE- 7113, on 12/04/15 and the original document is stored at the North Dakota Department of Transportation

Survey Data Points

ND 58

Jct 200 to Jct 1804

STATE	PROJECT NO.	SECTION NO.	SHEET NO.
ND	SOIB-7-058(013)000	82	8

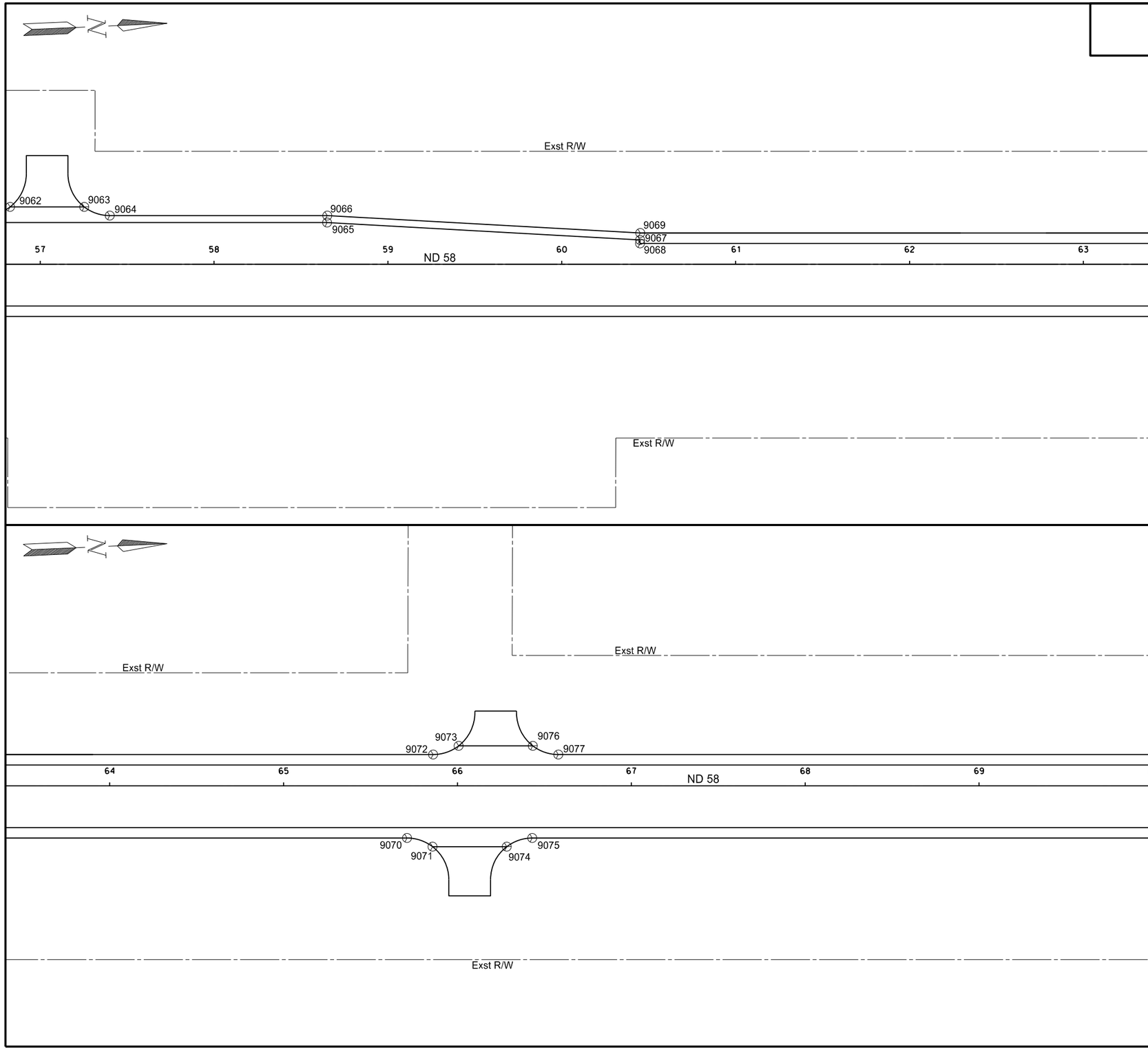

Point	North	East	Station	Offset
9062	340315.2500	1101870.0729	56+82.66	-33.00
9063	340357.8813	1101871.9848	57+25.34	-33.00
9064	340372.3055	1101877.6368	57+40.00	-28.00
9065	340497.0207	1101887.2340	58+65.02	-24.00
9066	340497.3108	1101883.2429	58+65.13	-28.00
9067	340676.3919	1101905.2884	60+45.02	-14.00
9068	340676.3023	1101907.2864	60+45.02	-12.00
9069	340676.6821	1101901.2974	60+45.13	-18.00
9070	341199.8725	1101972.8095	65+71.00	30.00
9071	341214.2966	1101978.4614	65+85.66	35.00
9072	341217.0080	1101925.5297	65+86.00	-18.00
9073	341231.8801	1101921.1917	66+00.66	-23.00
9074	341256.9280	1101980.3733	66+28.34	35.00
9075	341271.8002	1101976.0352	66+43.00	30.00
9076	341274.5115	1101923.1036	66+43.34	-23.00
9077	341288.9357	1101928.7555	66+58.00	-18.00

This document was originally issued and sealed by William Doerr, Registration Number PE- 7113, on 12/04/15 and the original document is stored at the North Dakota Department of Transportation

Survey Data Points

ND 58

Jct 200 to Jct 1804

STATE	PROJECT NO.	SECTION NO.	SHEET NO.
ND	SOIB-7-058(013)000	82	9

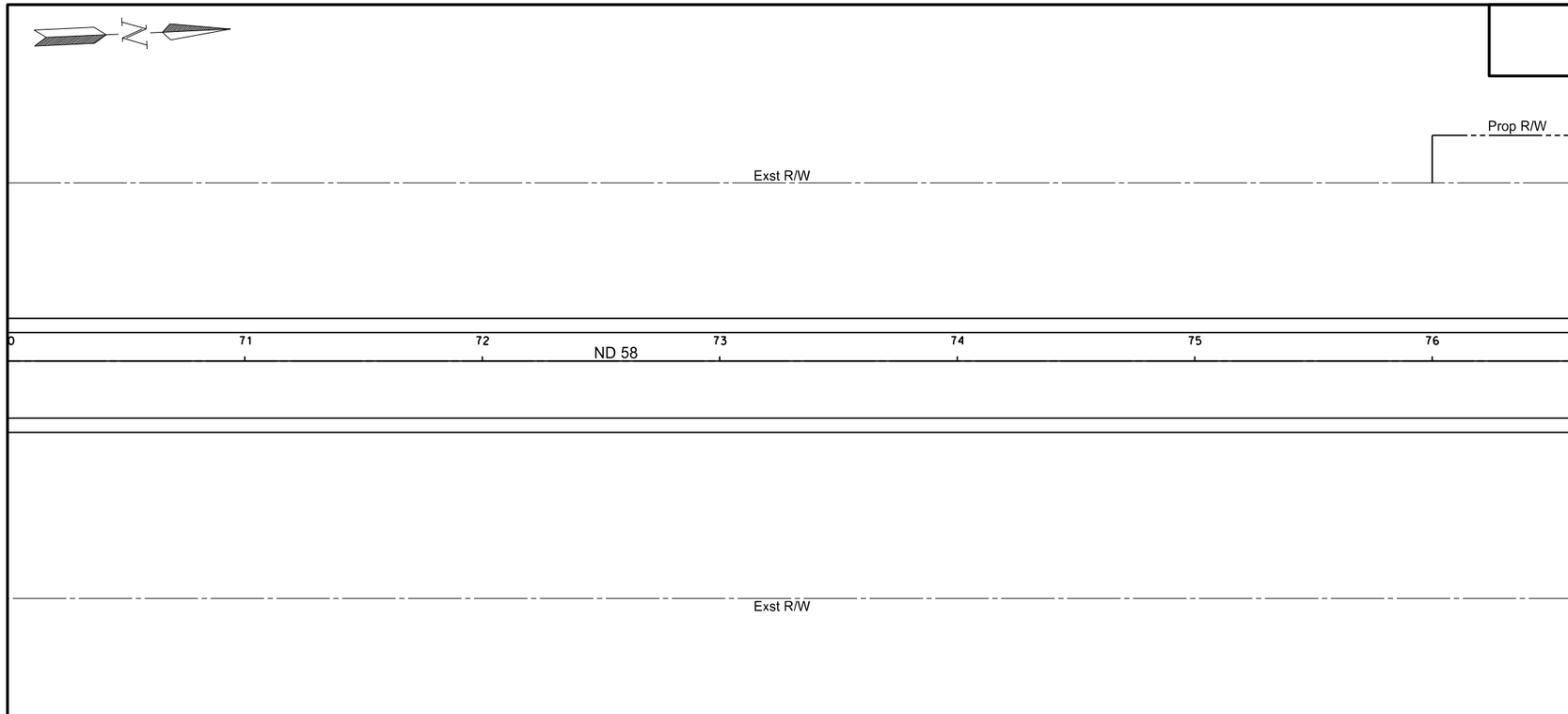

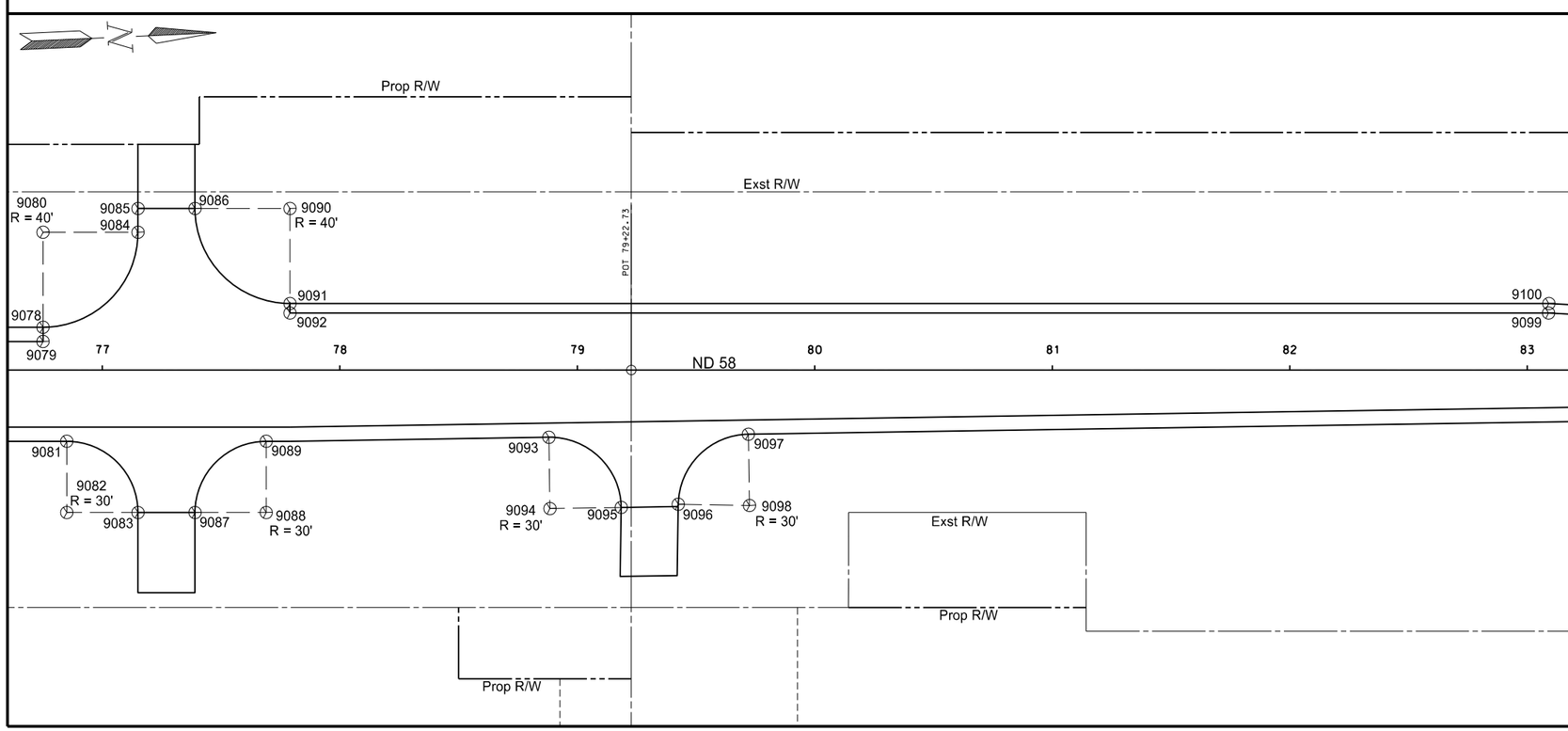

Point	North	East	Station	Offset
9078	342304.9145	1101974.3197	76+75.00	-18.00
9079	342304.6456	1101980.3137	76+75.00	-12.00
9080	342306.7066	1101934.3599	76+75.00	-58.00
9081	342312.7539	1102022.7195	76+85.00	30.00
9082	342311.4098	1102052.6894	76+85.00	60.00
9083	342341.3797	1102054.0335	77+15.00	60.00
9084	342346.6664	1101936.1520	77+15.00	-58.00
9085	342347.1144	1101926.1620	77+15.00	-68.00
9086	342371.0903	1101927.2373	77+39.00	-68.00
9087	342365.3556	1102055.1088	77+39.00	60.00
9088	342395.3255	1102056.4528	77+69.00	60.00
9089	342396.6695	1102026.4830	77+69.00	30.00
9090	342411.0502	1101929.0294	77+79.00	-68.00
9091	342409.2580	1101968.9892	77+79.00	-28.00
9092	342409.0788	1101972.9852	77+79.00	-24.00
9093	342515.6424	1102030.1398	78+88.02	28.32
9094	342514.7595	1102060.1268	78+88.48	58.32
9095	342544.7465	1102061.0098	79+18.48	57.86
9096	342568.8113	1102060.7509	79+42.50	56.52
9097	342599.6372	1102032.6130	79+72.04	27.03
9098	342598.7542	1102062.6000	79+72.50	57.03
9099	342938.5466	1101996.7306	83+09.00	-24.00
9100	342938.8368	1101992.7396	83+09.11	-28.00

This document was originally issued and sealed by William Doerr, Registration Number PE- 7113, on 12/04/15 and the original document is stored at the North Dakota Department of Transportation

Survey Data Points

ND 58

Jct 200 to Jct 1804

STATE	PROJECT NO.	SECTION NO.	SHEET NO.
ND	SOIB-7-058(013)000	82	10

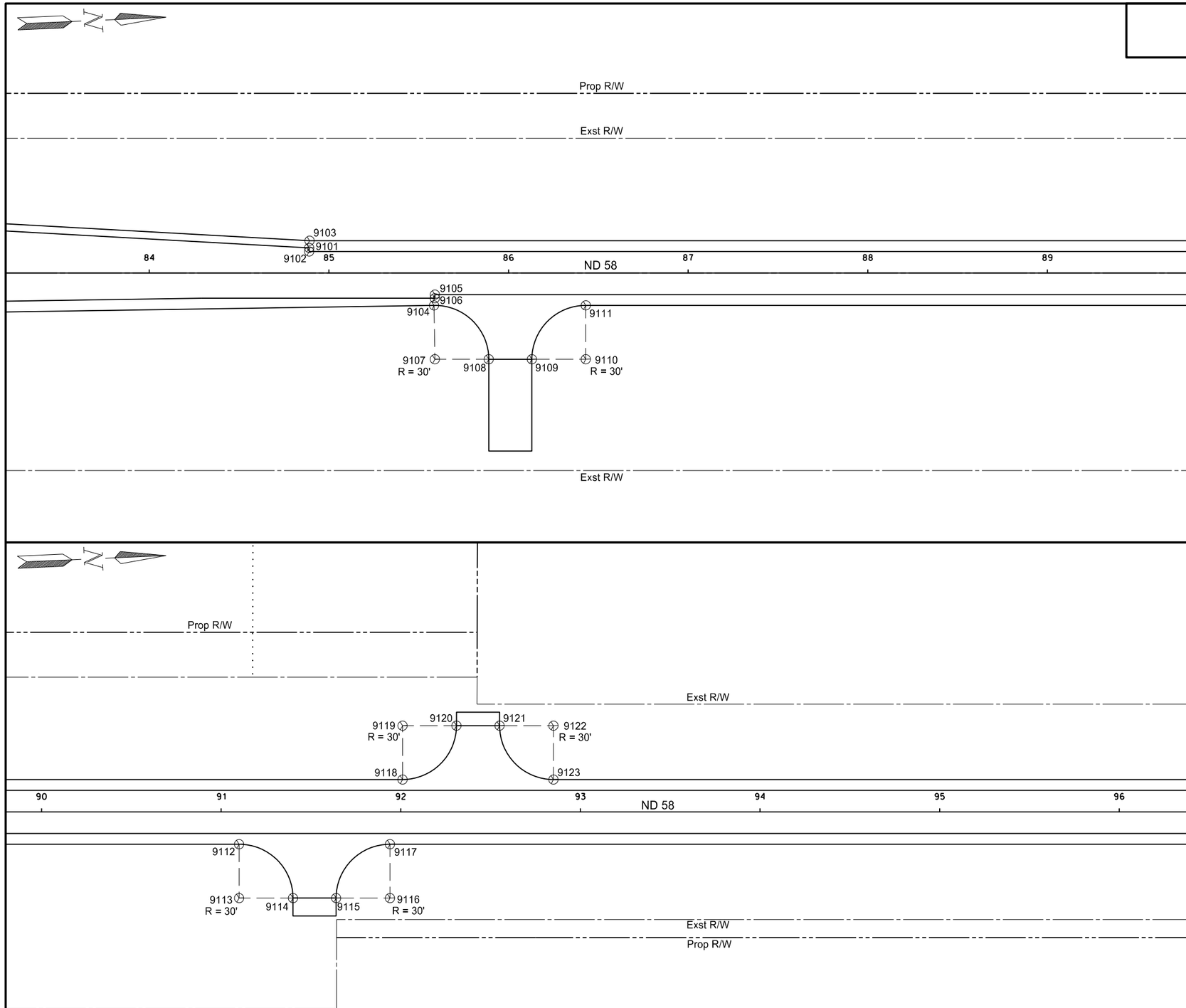

Point	North	East	Station	Offset
9101	343117.9179	1102014.7850	84+89.00	-14.00
9102	343117.8283	1102016.7830	84+89.00	-12.00
9103	343118.3185	1102010.8051	84+89.22	-17.99
9104	343185.9526	1102049.8762	85+58.54	18.01
9105	343186.6827	1102043.8951	85+59.00	12.00
9106	343186.5931	1102045.8937	85+59.00	14.00
9107	343185.0696	1102079.8632	85+59.00	48.00
9108	343215.0395	1102081.2073	85+89.00	48.00
9109	343239.0156	1102082.2783	86+13.00	48.00
9110	343268.9855	1102083.6223	86+43.00	48.00
9111	343270.3296	1102053.6525	86+43.00	18.00
9112	343736.8606	1102074.5753	91+10.00	18.00
9113	343735.5165	1102104.5451	91+10.00	48.00
9114	343765.4864	1102105.8892	91+40.00	48.00
9115	343789.4623	1102106.9645	91+64.00	48.00
9116	343819.4322	1102108.3086	91+94.00	48.00
9117	343820.7763	1102078.3387	91+94.00	18.00
9118	343829.3821	1102042.6884	92+01.00	-18.00
9119	343830.7262	1102012.7186	92+01.00	-48.00
9120	343860.6961	1102014.0627	92+31.00	-48.00
9121	343884.6720	1102015.1379	92+55.00	-48.00
9122	343914.6419	1102016.4820	92+85.00	-48.00
9123	343913.2978	1102046.4519	92+85.00	-18.00

This document was originally issued and sealed by William Doerr, Registration Number PE- 7113, on 12/04/15 and the original document is stored at the North Dakota Department of Transportation

Survey Data Points

ND 58

Jct 200 to Jct 1804

STATE	PROJECT NO.	SECTION NO.	SHEET NO.
ND	SOIB-7-058(013)000	82	11

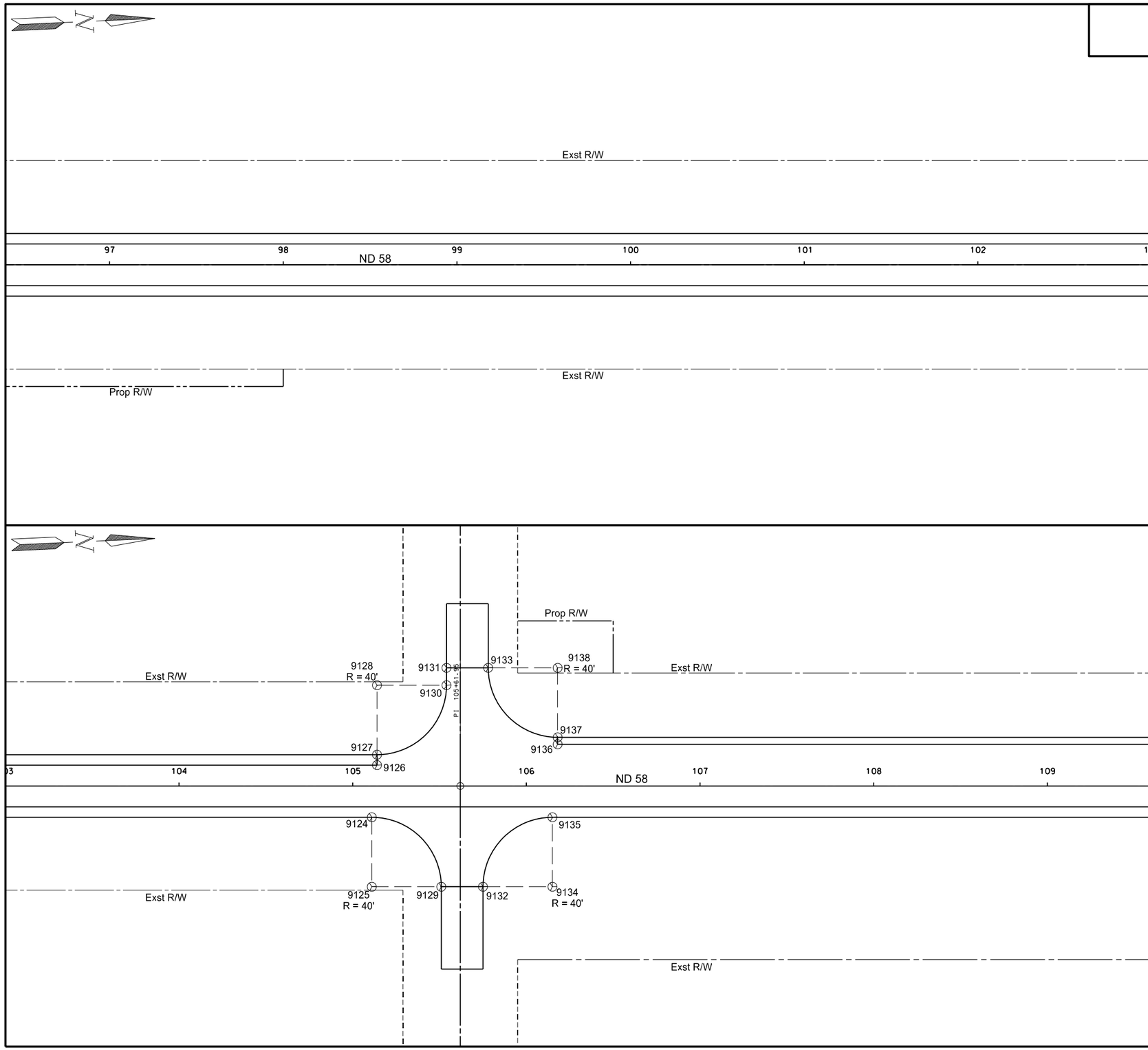

Point	North	East	Station	Offset
9124	345136.4538	1102137.3437	105+11.00	18.00
9125	345134.6617	1102177.3035	105+11.00	58.00
9126	345140.7949	1102107.5082	105+14.00	-12.00
9127	345141.0637	1102101.5142	105+14.00	-18.00
9128	345142.8558	1102061.5544	105+14.00	-58.00
9129	345174.6216	1102179.0956	105+51.00	58.00
9130	345182.8156	1102063.3465	105+54.00	-58.00
9131	345183.2635	1102053.3595	105+54.00	-68.00
9132	345198.5973	1102180.1737	105+75.00	58.00
9133	345207.2394	1102054.4348	105+78.00	-68.00
9134	345238.5572	1102181.9658	106+15.00	58.00
9135	345240.3514	1102142.0060	106+15.00	18.00
9136	345245.2255	1102100.1826	106+18.00	-24.00
9137	345245.4050	1102096.1866	106+18.00	-28.00
9138	345247.1993	1102056.2269	106+18.00	-68.00

This document was originally issued and sealed by William Doerr, Registration Number PE- 7113, on 12/04/15 and the original document is stored at the North Dakota Department of Transportation

Survey Data Points

ND 58

Jct 200 to Jct 1804

STATE	PROJECT NO.	SECTION NO.	SHEET NO.
ND	SOIB-7-058(013)000	82	12

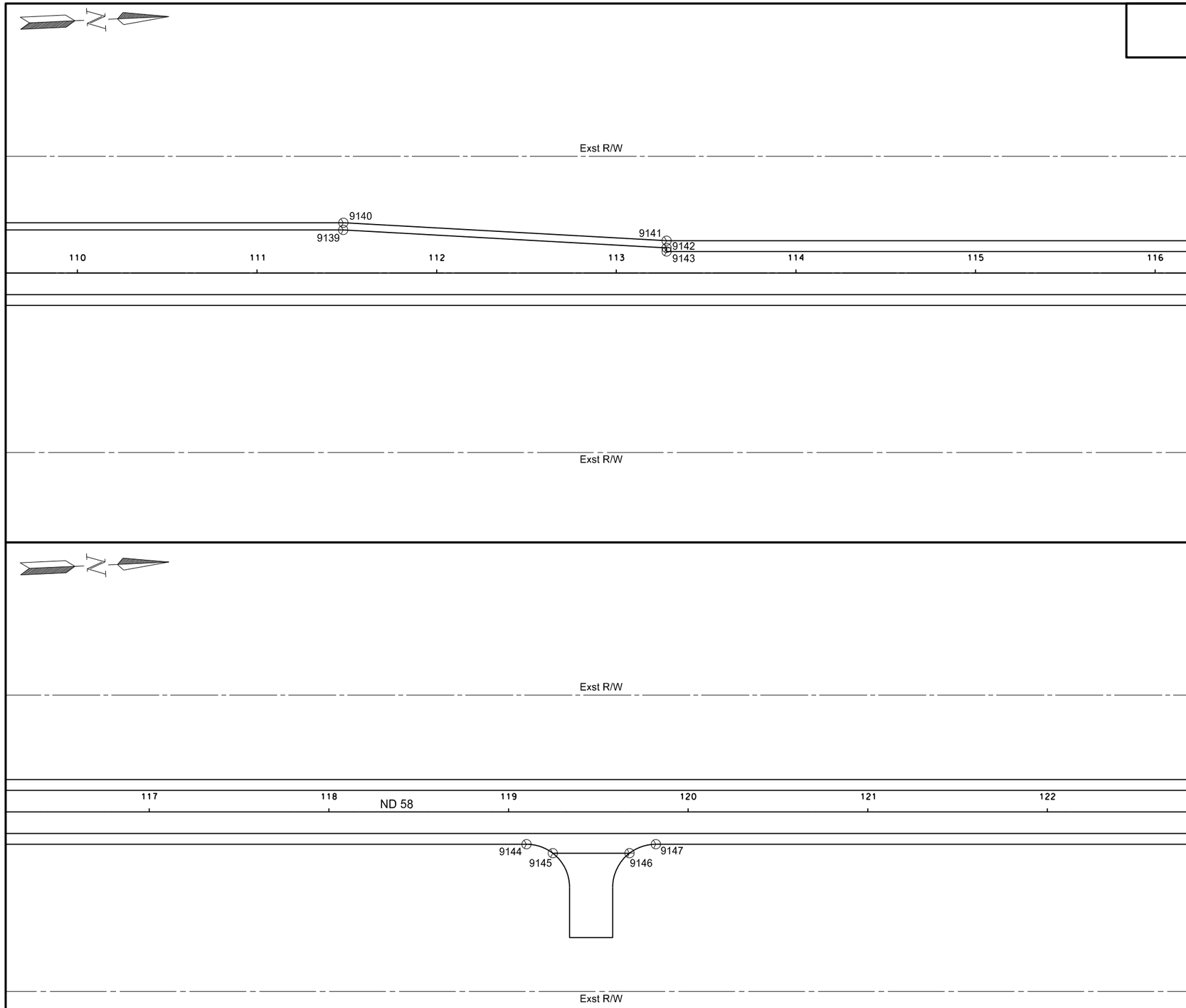

Point	North	East	Station	Offset
9139	345774.6921	1102123.9558	111+48.00	-24.00
9140	345774.9121	1102119.9617	111+48.04	-28.00
9141	345954.2418	1102138.0237	113+28.00	-18.00
9142	345954.0624	1102142.0197	113+28.00	-14.00
9143	345953.9727	1102144.0177	113+28.00	-12.00
9144	346534.0449	1102200.0934	119+10.00	18.00
9145	346548.4687	1102205.7461	119+24.66	23.00
9146	346591.1000	1102207.6602	119+67.34	23.00
9147	346605.9724	1102203.3230	119+82.00	18.00

This document was originally issued and sealed by William Doerr, Registration Number PE- 7113, on 12/04/15 and the original document is stored at the North Dakota Department of Transportation

Survey Data Points

ND 58

Jct 200 to Jct 1804

STATE	PROJECT NO.	SECTION NO.	SHEET NO.
ND	SOIB-7-058(013)000	82	13

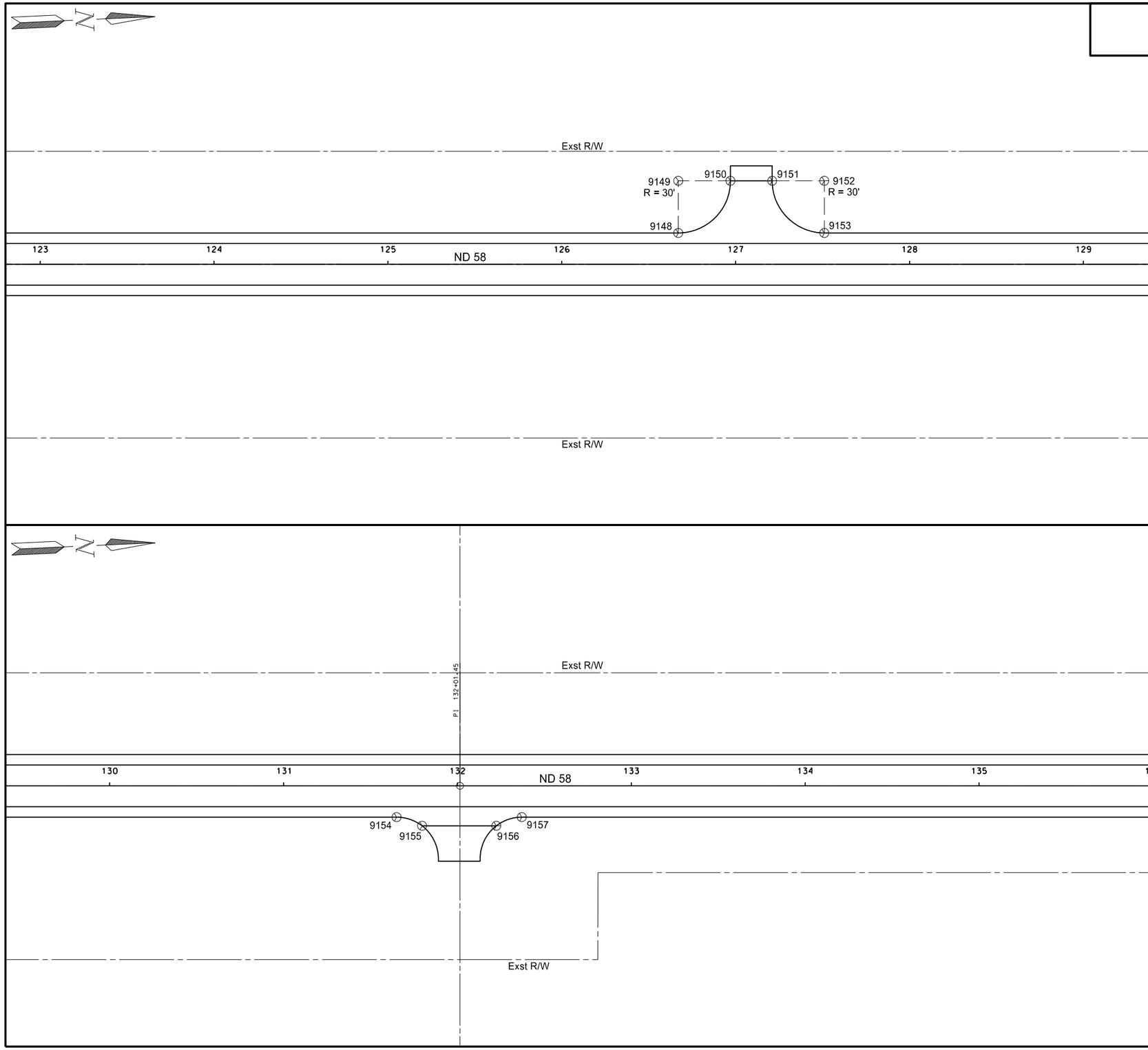

Point	North	East	Station	Offset
9148	347291.8978	1102198.0850	126+67.00	-18.00
9149	347293.2434	1102168.1152	126+67.00	-48.00
9150	347323.2132	1102169.4609	126+97.00	-48.00
9151	347347.1891	1102170.5374	127+21.00	-48.00
9152	347377.1589	1102171.8831	127+51.00	-48.00
9153	347375.8132	1102201.8529	127+51.00	-18.00
9154	347787.7817	1102256.3867	131+65.00	18.00
9155	347802.2056	1102262.0394	131+79.66	23.00
9156	347844.8369	1102263.9535	132+22.34	23.00
9157	347859.7093	1102259.6163	132+37.00	18.00

This document was originally issued and sealed by William Doerr, Registration Number PE- 7113, on 12/04/15 and the original document is stored at the North Dakota Department of Transportation

Survey Data Points

ND 58

Jct 200 to Jct 1804

STATE	PROJECT NO.	SECTION NO.	SHEET NO.
ND	SOIB-7-058(013)000	82	14

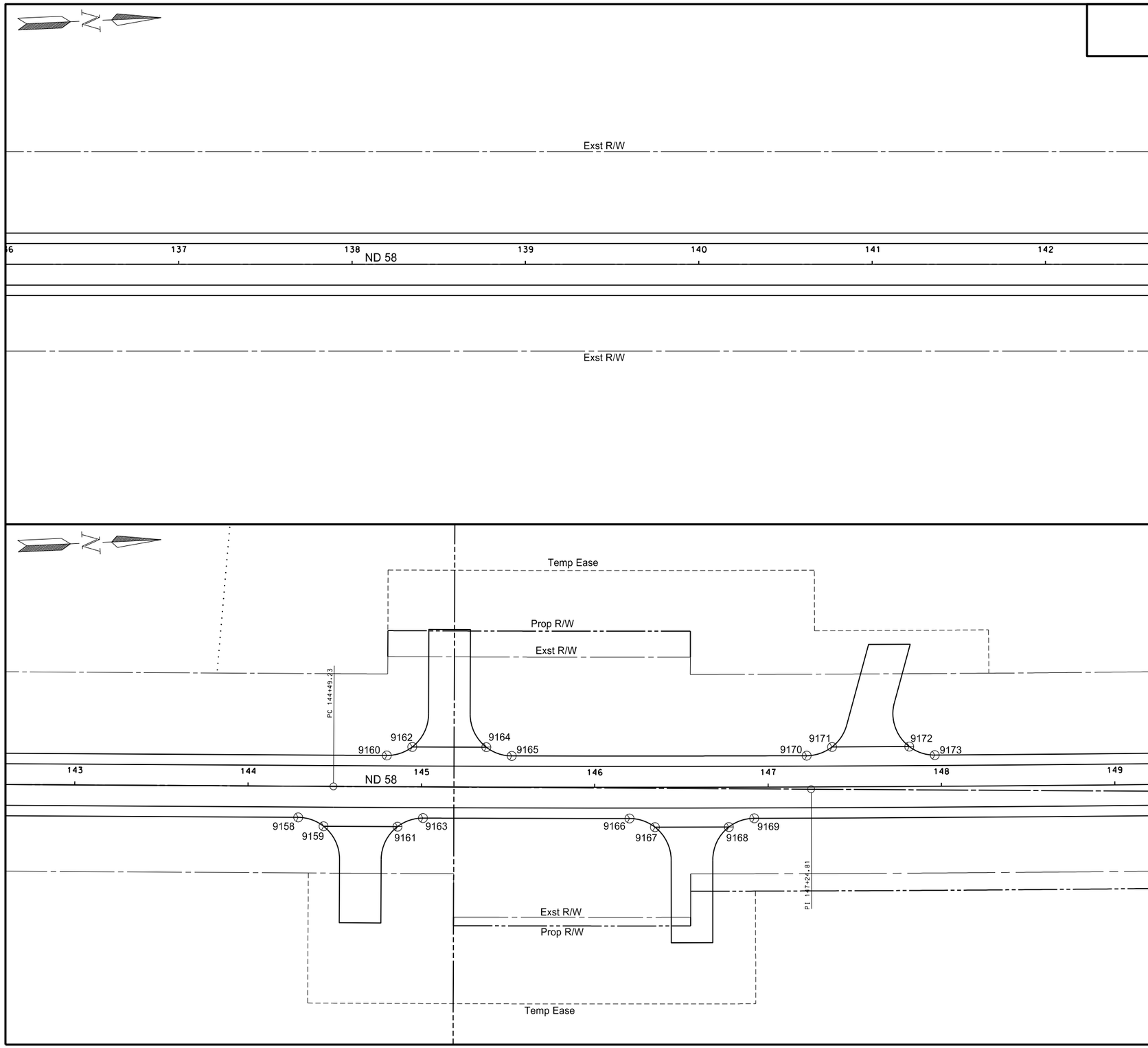

Point	North	East	Station	Offset
9158	349050.5336	1102313.0850	144+29.02	18.00
9159	349064.9751	1102318.7526	144+43.71	23.01
9160	349103.0005	1102279.3880	144+79.95	-18.00
9161	349107.5589	1102320.6277	144+86.30	23.00
9162	349117.8540	1102275.0449	144+94.61	-22.99
9163	349122.4200	1102316.2660	145+00.95	18.00
9164	349160.5489	1102276.8493	145+37.37	-23.00
9165	349174.9957	1102282.4526	145+52.05	-18.00
9166	349241.5000	1102321.1494	146+20.05	18.00
9167	349255.9706	1102326.7270	146+34.72	23.01
9168	349298.5567	1102328.3184	146+77.30	23.00
9169	349313.3888	1102323.8574	146+91.95	18.00
9170	349345.0346	1102288.9698	147+22.32	-18.00
9171	349359.8565	1102284.4971	147+36.99	-22.99
9172	349404.3790	1102286.0085	147+81.57	-22.99
9173	349418.8686	1102291.4847	147+96.25	-18.00

This document was originally issued and sealed by William Doerr, Registration Number PE- 7113, on 12/04/15 and the original document is stored at the North Dakota Department of Transportation

Survey Data Points

ND 58

Jct 200 to Jct 1804

STATE	PROJECT NO.	SECTION NO.	SHEET NO.
ND	SOIB-7-058(013)000	82	15

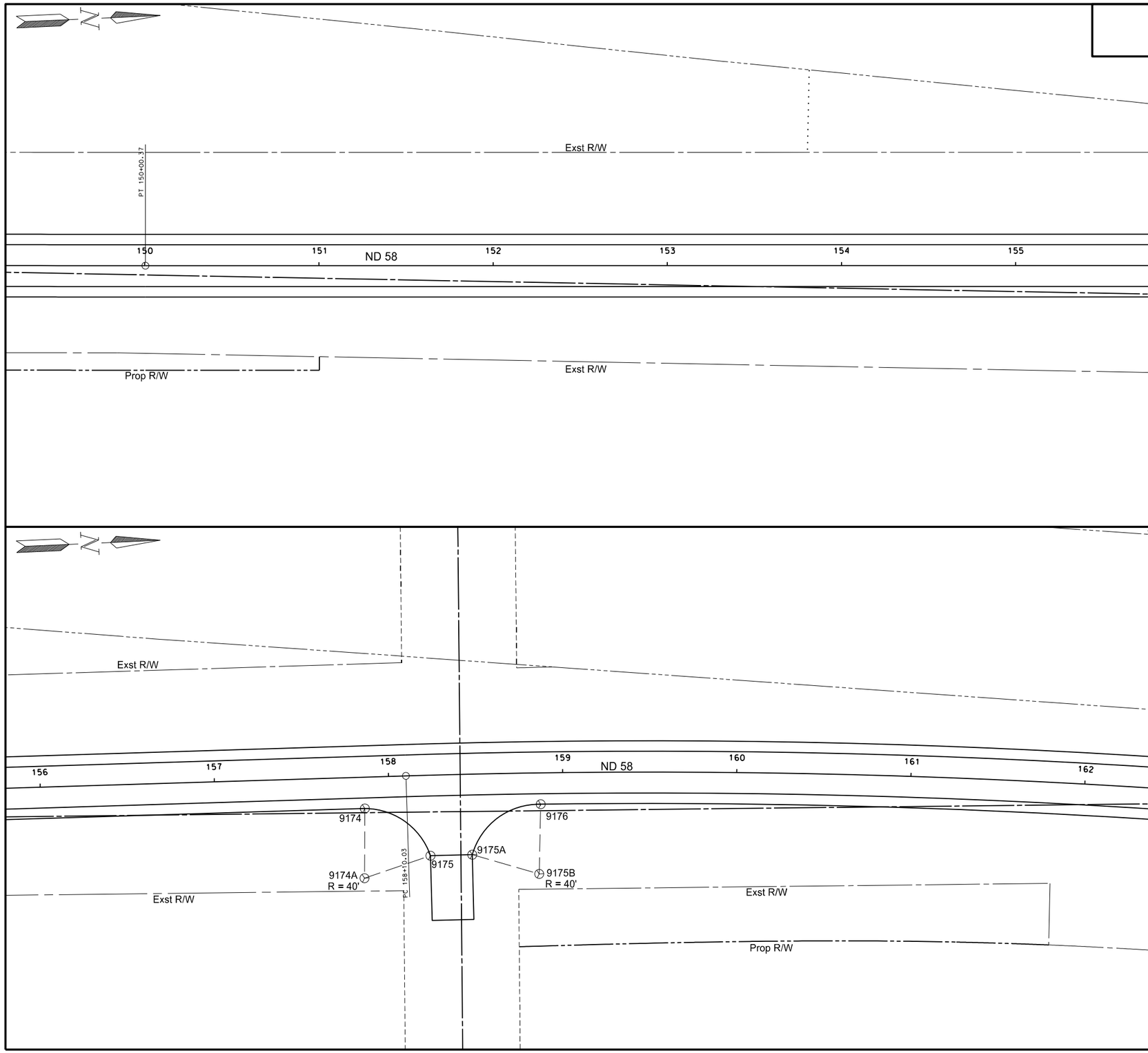

Point	North	East	Station	Offset
9174	350407.1249	1102353.5599	157+85.90	18.00
9174A	349340.3343	1102519.4266	157+84.47	57.97
9175	350443.2096	1102382.7494	158+22.85	46.24
9175A	350467.1974	1102383.5142	158+47.10	46.26
9175B	349342.8028	1102619.7377	158+85.79	57.98
9176	350508.0694	1102356.8032	158+87.20	18.00

This document was originally issued and sealed by William Doerr, Registration Number PE- 7113, on 12/04/15 and the original document is stored at the North Dakota Department of Transportation

Survey Data Points

ND 58

Jct 200 to Jct 1804

STATE	PROJECT NO.	SECTION NO.	SHEET NO.
ND	SOIB-7-058(013)000	82	16

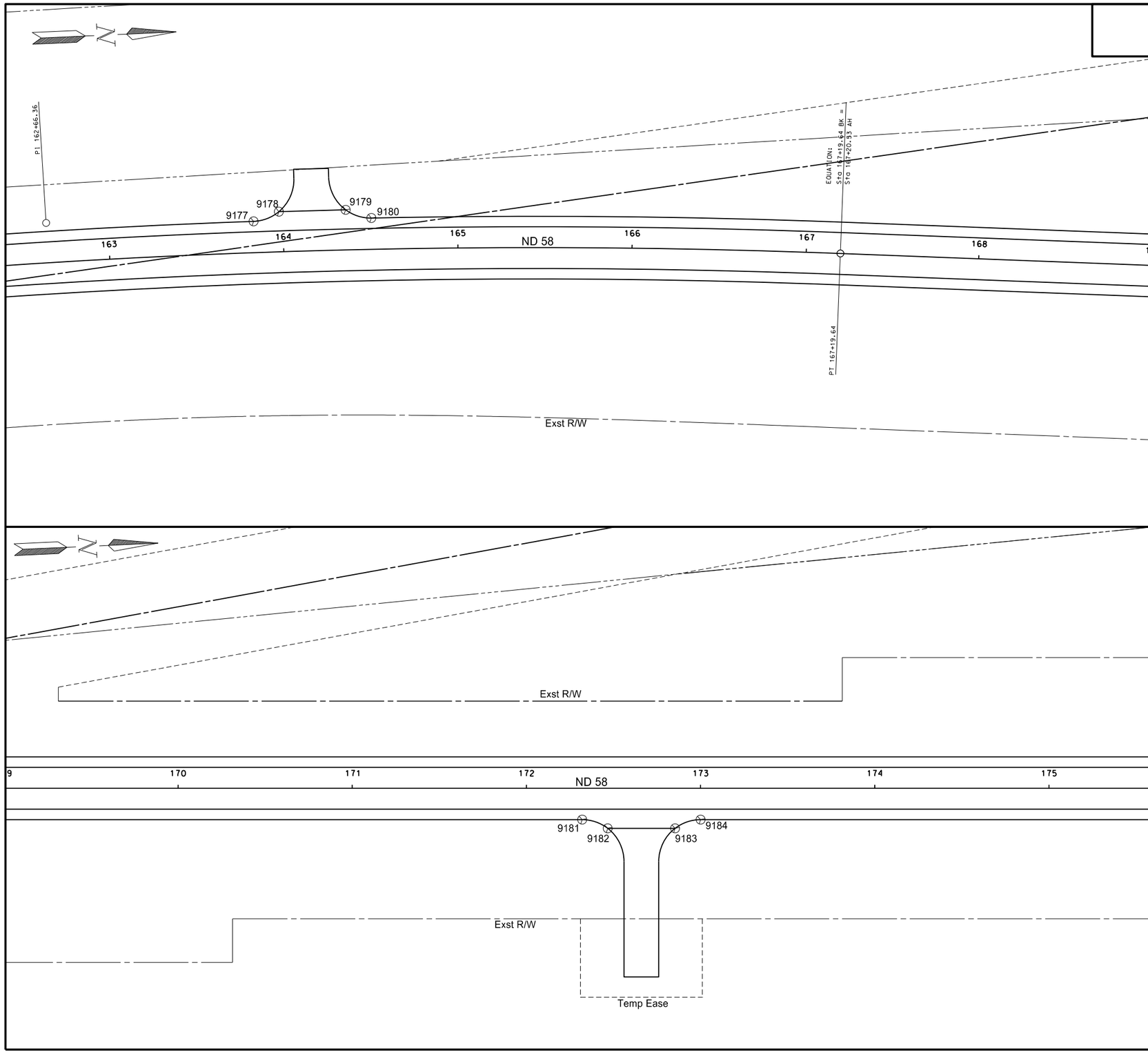

Point	North	East	Station	Offset
9177	351005.0799	1102369.1804	163+83.31	-18.00
9178	351020.3932	1102366.4220	163+97.96	-23.07
9179	351058.2491	1102372.5607	164+36.11	-23.01
9180	351071.8669	1102379.9123	164+50.69	-18.00
9181	351827.0542	1102582.2749	172+32.00	18.00
9182	351840.2239	1102590.4332	172+46.66	23.00
9183	351877.9148	1102599.0989	172+85.34	23.00
9184	351893.3252	1102597.5115	173+00.00	18.00

This document was originally issued and sealed by William Doerr, Registration Number PE- 7113, on 12/04/15 and the original document is stored at the North Dakota Department of Transportation

Survey Data Points

ND 58

Jct 200 to Jct 1804

STATE	PROJECT NO.	SECTION NO.	SHEET NO.
ND	SOIB-7-058(013)000	82	17

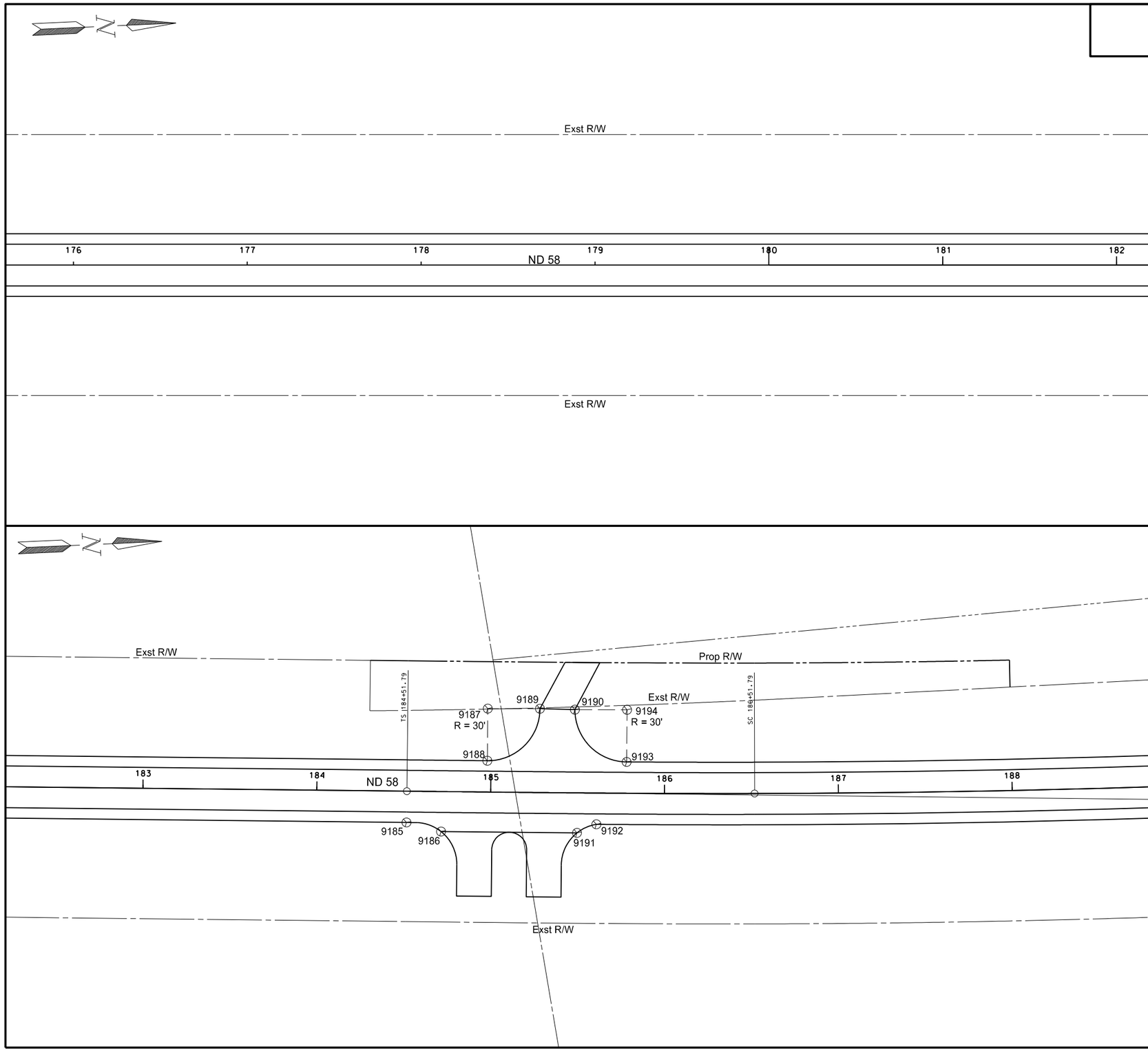

Point	North	East	Station	Offset
9185	353015.8324	1102855.5908	184+51.79	18.00
9186	353034.1395	1102864.9435	184+71.73	23.01
9187	353075.4683	1102801.5773	184+97.84	-47.99
9188	353068.8243	1102830.8242	184+97.90	-18.00
9189	353104.7640	1102808.0394	185+27.90	-48.22
9190	353124.2889	1102812.8608	185+48.06	-47.85
9191	353110.3632	1102882.3622	185+49.85	23.01
9192	353122.2868	1102879.9206	185+60.92	18.00
9193	353146.9406	1102848.5700	185+78.09	-18.00
9194	353153.5847	1102819.3230	185+78.17	-47.99

This document was originally issued and sealed by William Doerr, Registration Number PE- 7113, on 12/04/15 and the original document is stored at the North Dakota Department of Transportation

Survey Data Points

ND 58

Jct 200 to Jct 1804

STATE	PROJECT NO.	SECTION NO.	SHEET NO.
ND	SOIB-7-058(013)000	82	18

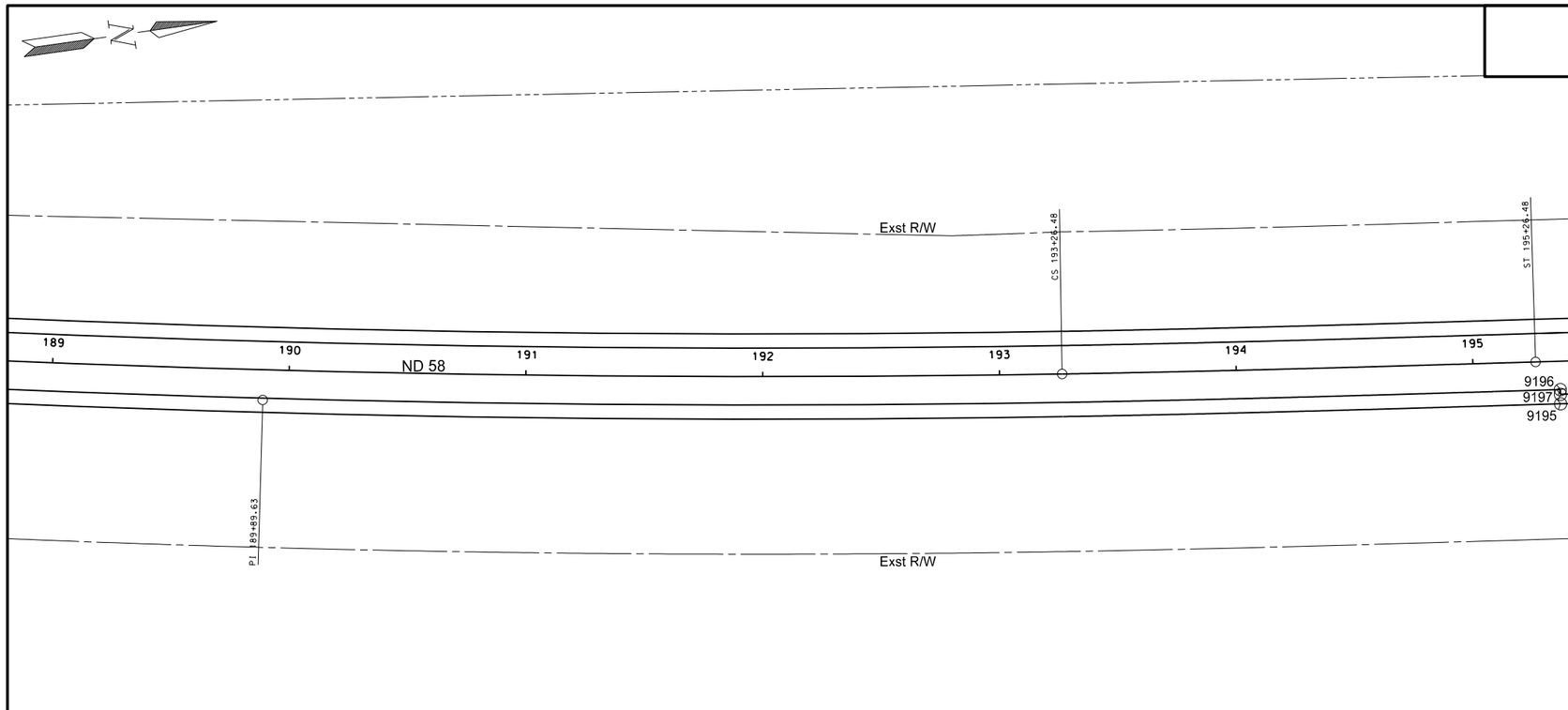

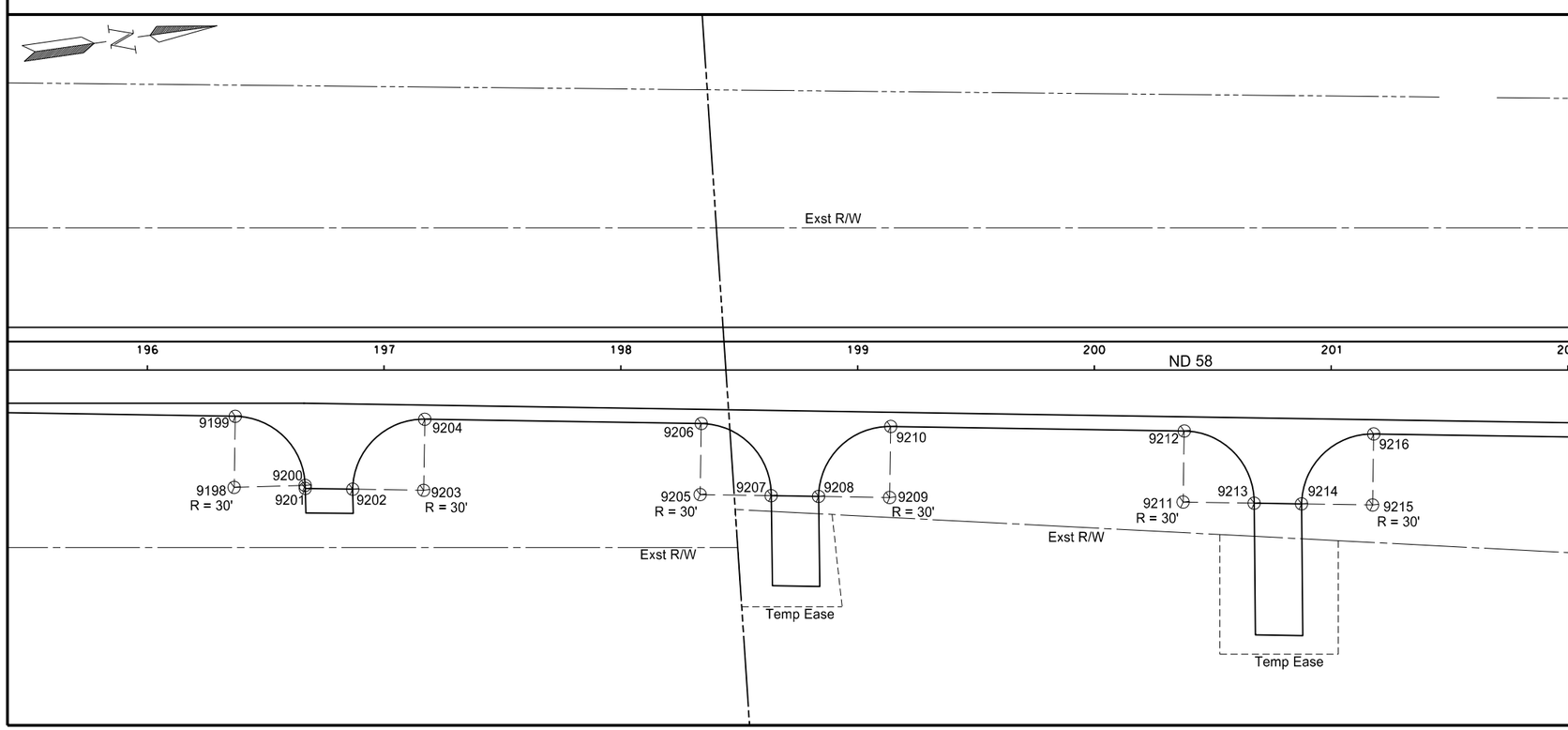

Point	North	East	Station	Offset
9195	354086.5246	1103037.4064	195+36.55	18.00
9196	354087.2382	1103031.4488	195+36.60	12.00
9197	354087.0157	1103033.4364	195+36.60	14.00
9198	354182.5219	1103079.9043	196+36.68	49.55
9199	354186.3207	1103050.1457	196+37.14	19.56
9200	354212.4165	1103082.4170	196+66.67	48.72
9201	354212.3080	1103083.7083	196+66.70	50.02
9202	354232.1770	1103086.2446	196+86.73	50.33
9203	354261.9357	1103090.0417	197+16.73	50.79
9204	354265.7345	1103060.2832	197+17.19	20.79
9205	354377.7740	1103104.8288	198+33.49	52.60
9206	354381.5728	1103075.0703	198+33.96	22.60
9207	354407.5325	1103108.6276	198+63.49	53.06
9208	354427.3944	1103111.1631	198+83.51	53.37
9209	354457.1529	1103114.9618	199+13.51	53.84
9210	354460.9517	1103085.2033	199+13.97	23.84
9211	354580.1512	1103130.6630	200+37.49	55.76
9212	354583.9499	1103100.9045	200+37.95	25.76
9213	354609.9097	1103134.4618	200+67.48	56.22
9214	354629.7655	1103136.9964	200+87.50	56.53
9215	354659.5241	1103140.7952	201+17.50	56.99
9216	354663.3228	1103111.0367	201+17.96	27.00

This document was originally issued and sealed by William Doerr, Registration Number PE- 7113, on 12/04/15 and the original document is stored at the North Dakota Department of Transportation

Survey Data Points

ND 58

Jct 200 to Jct 1804

STATE	PROJECT NO.	SECTION NO.	SHEET NO.
ND	SOIB-7-058(013)000	82	19

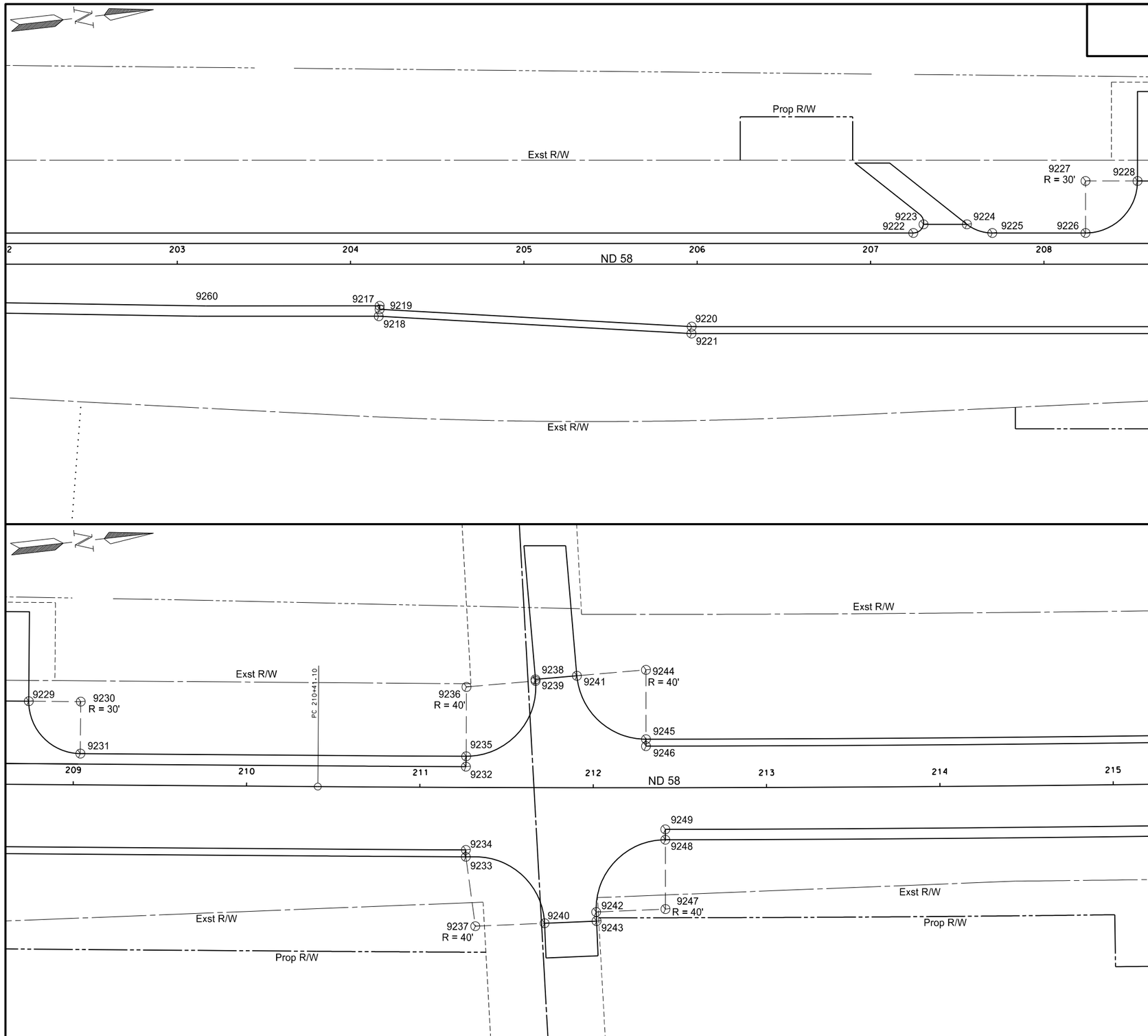

Point	North	East	Station	Offset
9217	354959.4210	1103147.2075	204+16.24	30.00
9218	354960.6317	1103141.3300	204+16.79	24.02
9219	354960.4101	1103143.3177	204+16.79	26.02
9220	355137.6266	1103177.2209	205+96.68	40.00
9221	355138.1817	1103173.2580	205+96.79	36.00
9222	355271.2244	1103133.8154	207+24.62	-18.00
9223	355277.6600	1103129.5046	207+30.54	-23.00
9224	355302.5184	1103132.2876	207+55.55	-23.00
9225	355316.5339	1103138.8880	207+70.21	-18.00
9226	355369.9852	1103144.8721	208+24.00	-18.00
9227	355373.3230	1103115.0584	208+24.00	-48.00
9228	355403.1367	1103118.3966	208+54.00	-48.00
9229	355423.0133	1103120.6219	208+74.00	-48.00
9230	355452.8271	1103123.9592	209+04.00	-48.00
9231	355449.4894	1103153.7729	209+04.00	-18.00
9232	355669.9185	1103184.3284	211+26.51	-12.00
9233	355664.4818	1103236.0436	211+26.66	40.00
9234	355664.9120	1103232.0668	211+26.66	36.00
9235	355670.7196	1103178.3801	211+26.66	-18.00
9236	355675.0216	1103138.6121	211+26.66	-58.00
9237	355665.7791	1103276.4166	211+32.27	80.00
9238	355715.0314	1103138.4210	211+66.53	-62.46
9239	355715.0151	1103139.3290	211+66.61	-61.55
9240	355705.7030	1103278.8820	211+72.10	78.20
9241	355739.0276	1103138.8512	211+90.50	-64.56
9242	355735.9681	1103275.5145	212+01.74	71.68
9243	355735.6460	1103280.7310	212+01.97	76.90
9244	355779.0211	1103139.5682	212+30.47	-68.00
9245	355774.8994	1103179.3553	212+30.47	-28.00
9246	355774.4872	1103183.3340	212+30.47	-24.00
9247	355775.8921	1103277.9798	212+41.59	70.00
9248	355779.9945	1103238.1908	212+41.59	30.00
9249	355780.6099	1103232.2224	212+41.59	24.00

This document was originally issued and sealed by William Doerr, Registration Number PE- 7113, on 12/04/15 and the original document is stored at the North Dakota Department of Transportation

Survey Data Points

ND 58

Jct 200 to Jct 1804

STATE	PROJECT NO.	SECTION NO.	SHEET NO.
ND	SOIB-7-058(013)000	82	20

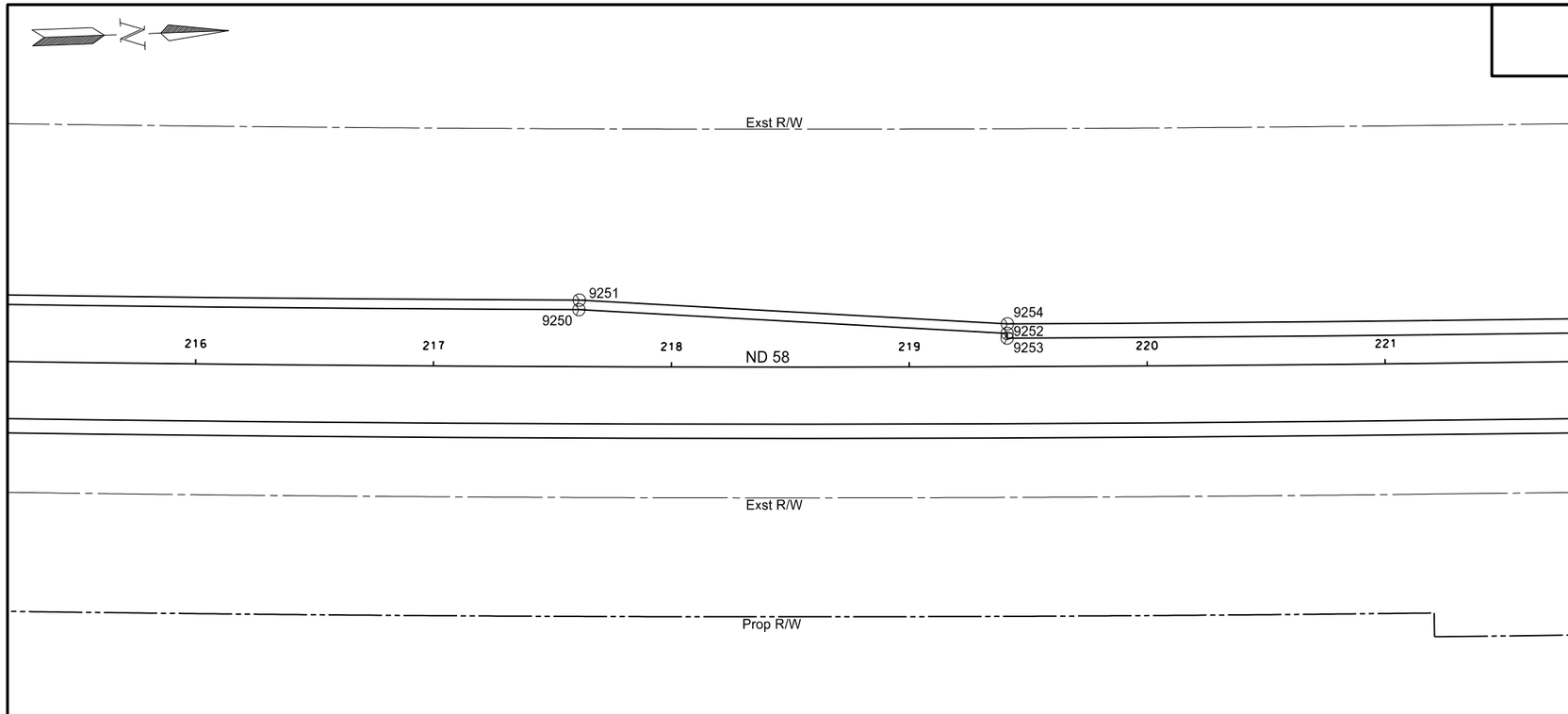

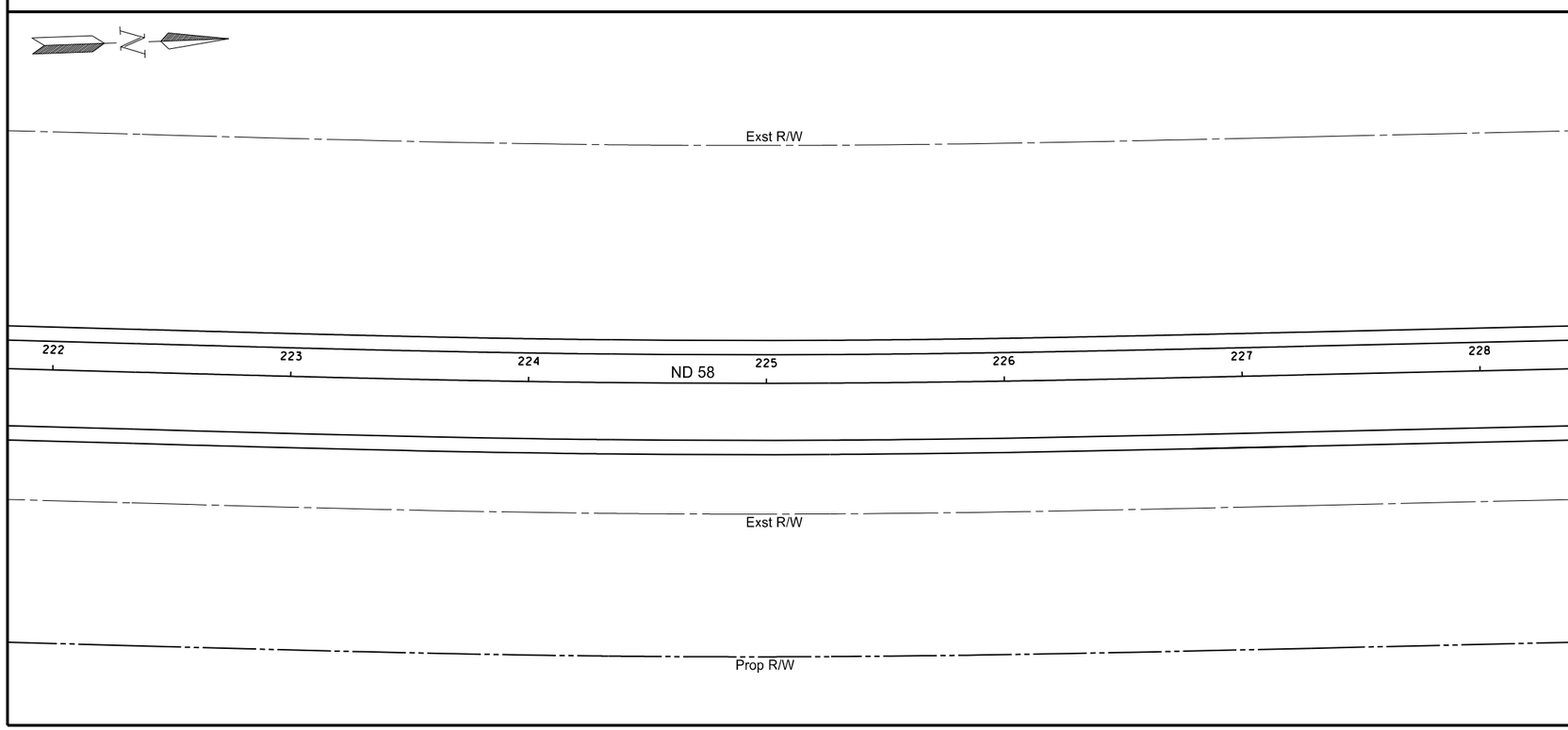

Point	North	East	Station	Offset
9250	356302.2682	1103231.8420	217+61.04	-24.00
9251	356302.7045	1103227.8641	217+61.16	-28.00
9252	356480.9823	1103255.5058	219+41.19	-14.00
9253	356480.8380	1103257.5006	219+41.19	-12.00
9254	356481.3895	1103251.5248	219+41.31	-18.00

This document was originally issued and sealed by William Doerr, Registration Number PE- 7113, on 12/04/15 and the original document is stored at the North Dakota Department of Transportation

Survey Data Points

ND 58

Jct 200 to Jct 1804

STATE	PROJECT NO.	SECTION NO.	SHEET NO.
ND	SOIB-7-058(013)000	82	21

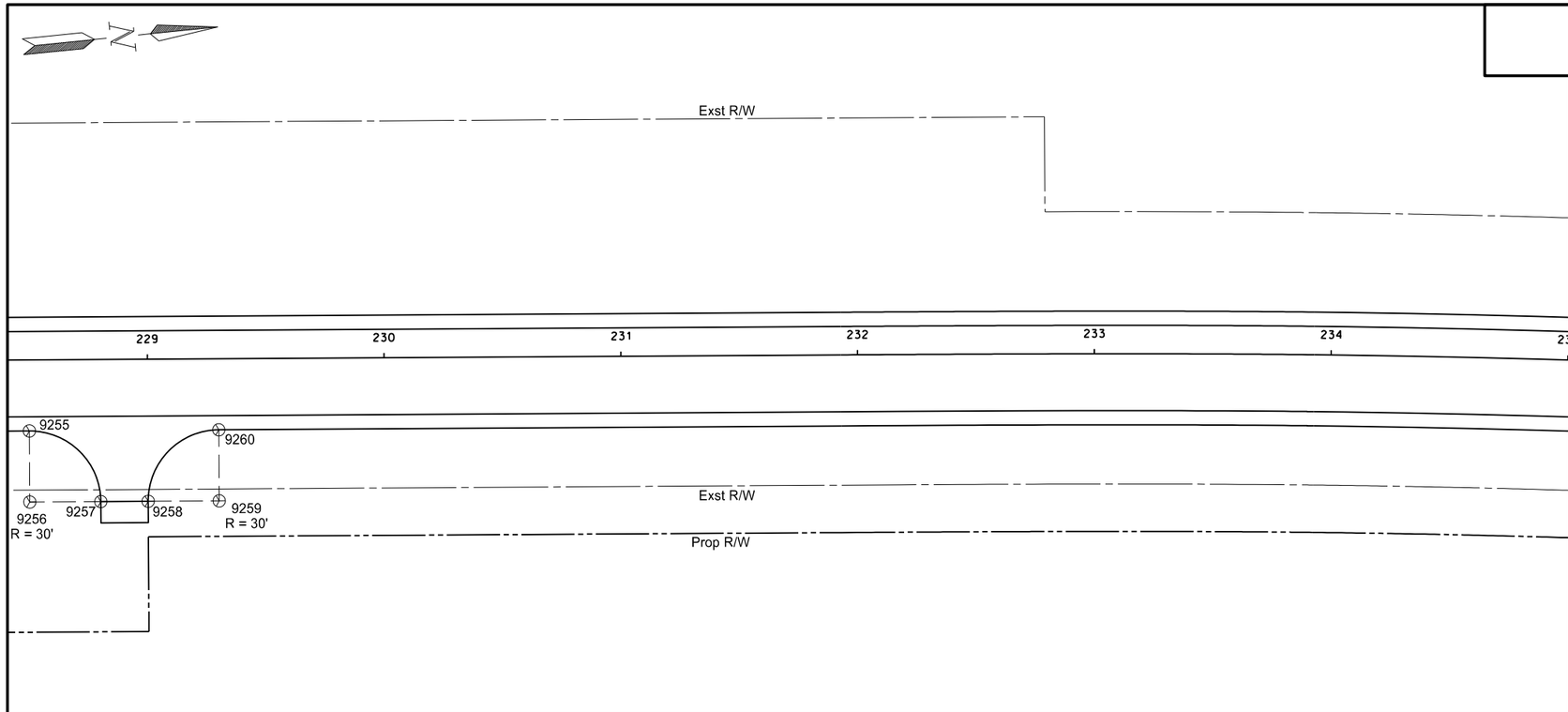

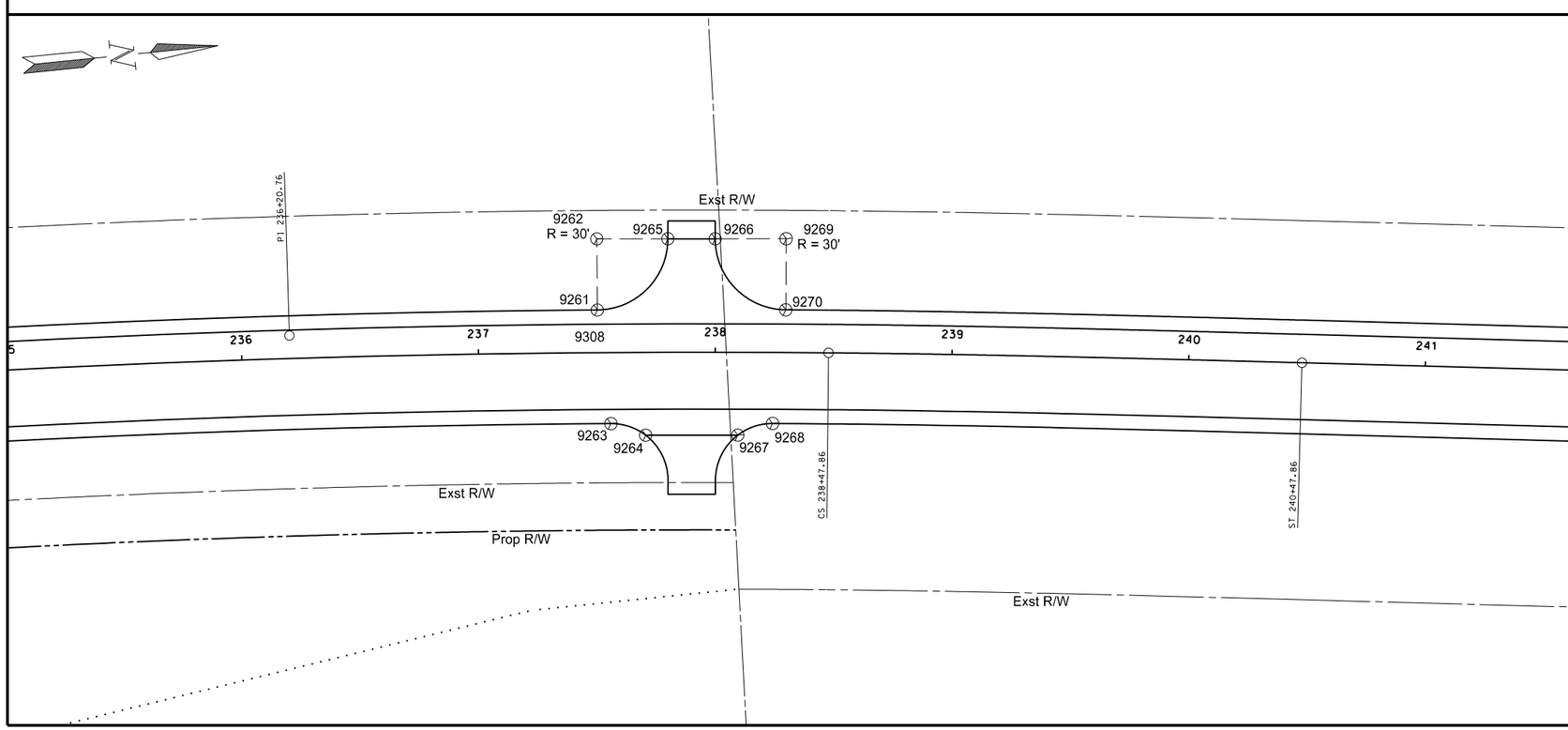

Point	North	East	Station	Offset
9255	357387.2538	1103339.8848	228+50.00	30.00
9256	357386.8485	1103369.8821	228+50.00	60.00
9257	357416.8458	1103370.2848	228+80.00	60.00
9258	357436.8446	1103370.5550	229+00.00	60.00
9259	357466.8418	1103370.9627	229+30.00	60.00
9260	357467.2470	1103340.9654	229+30.00	30.00
9261	358288.8522	1103322.6591	237+50.33	-18.00
9262	358291.6484	1103292.7897	237+50.33	-48.00
9263	358289.6990	1103370.9507	237+55.71	30.00
9264	358303.8330	1103377.3154	237+70.47	34.99
9265	358321.4986	1103295.7845	237+80.09	-47.88
9266	358341.3964	1103297.8082	237+99.92	-47.86
9267	358342.5259	1103381.2076	238+09.59	34.99
9268	358357.6436	1103377.7865	238+24.35	30.00
9269	358371.2471	1103300.7975	238+29.67	-48.00
9270	358368.0376	1103330.6254	238+29.67	-18.00

This document was originally issued and sealed by William Doerr, Registration Number PE- 7113, on 12/04/15 and the original document is stored at the North Dakota Department of Transportation

Survey Data Points

ND 58

Jct 200 to Jct 1804

STATE	PROJECT NO.	SECTION NO.	SHEET NO.
ND	SOIB-7-058(013)000	82	22

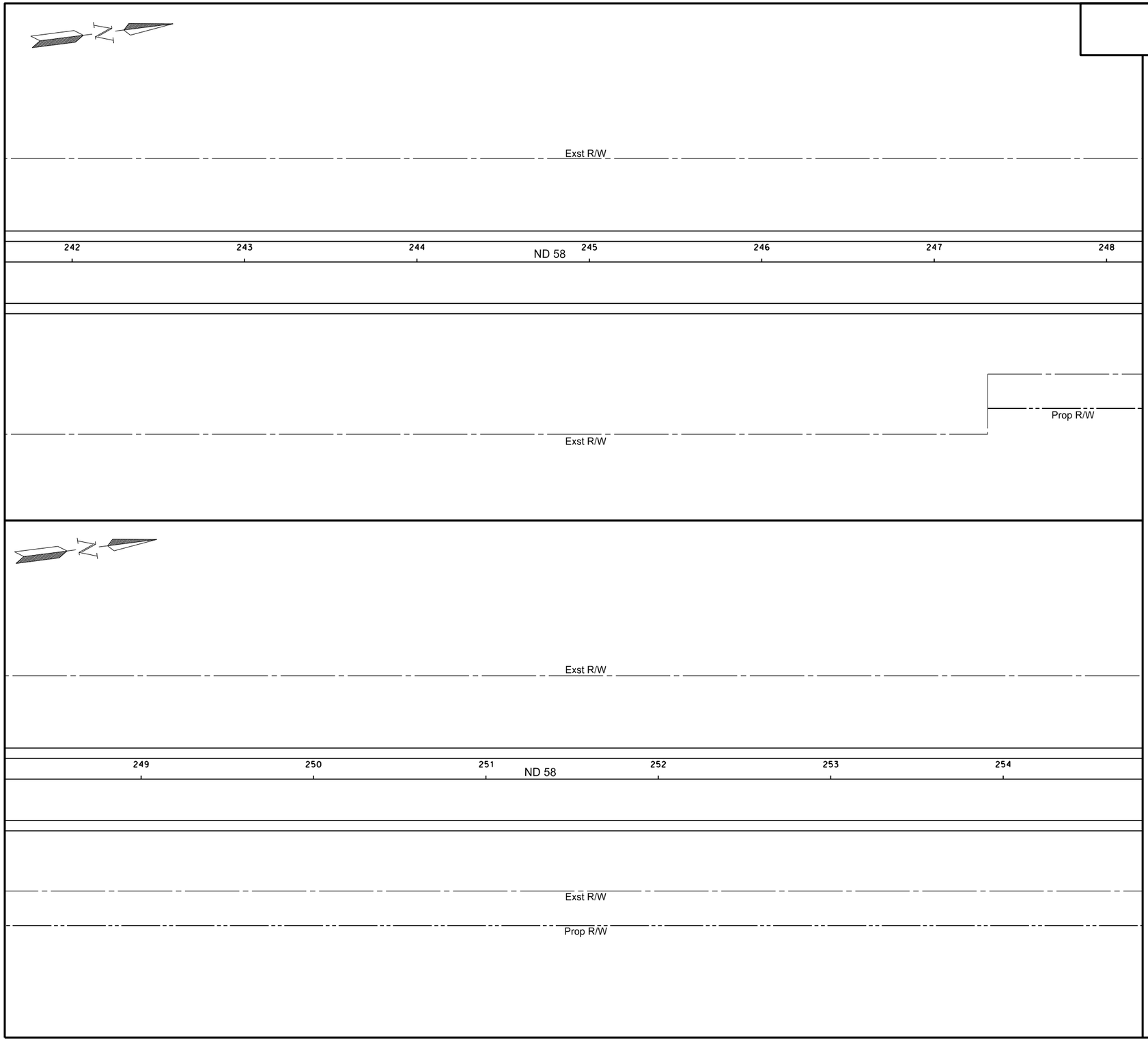

This document was originally issued and sealed by William Doerr, Registration Number PE- 7113, on 12/04/15 and the original document is stored at the North Dakota Department of Transportation

Survey Data Points

ND 58

Jct 200 to Jct 1804

STATE	PROJECT NO.	SECTION NO.	SHEET NO.
ND	SOIB-7-058(013)000	82	23

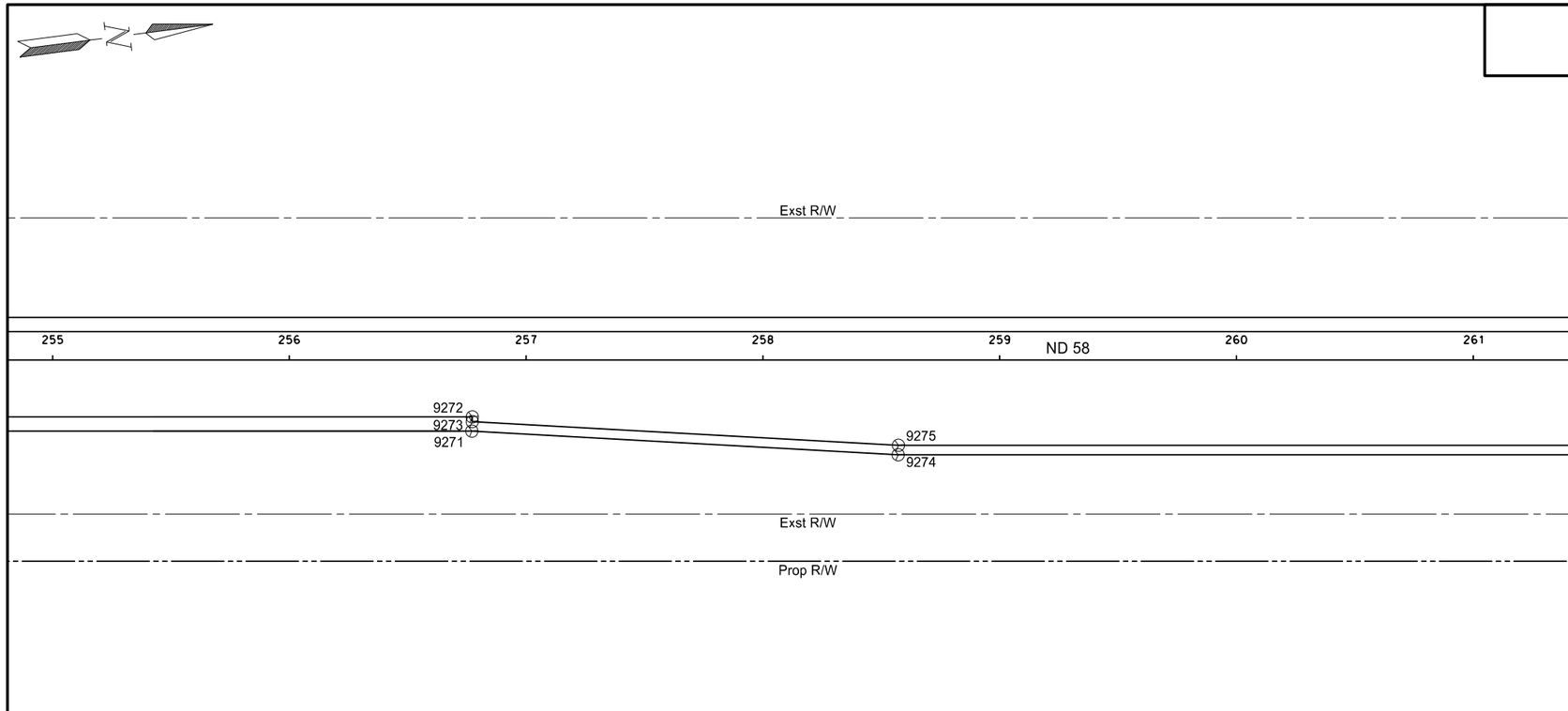

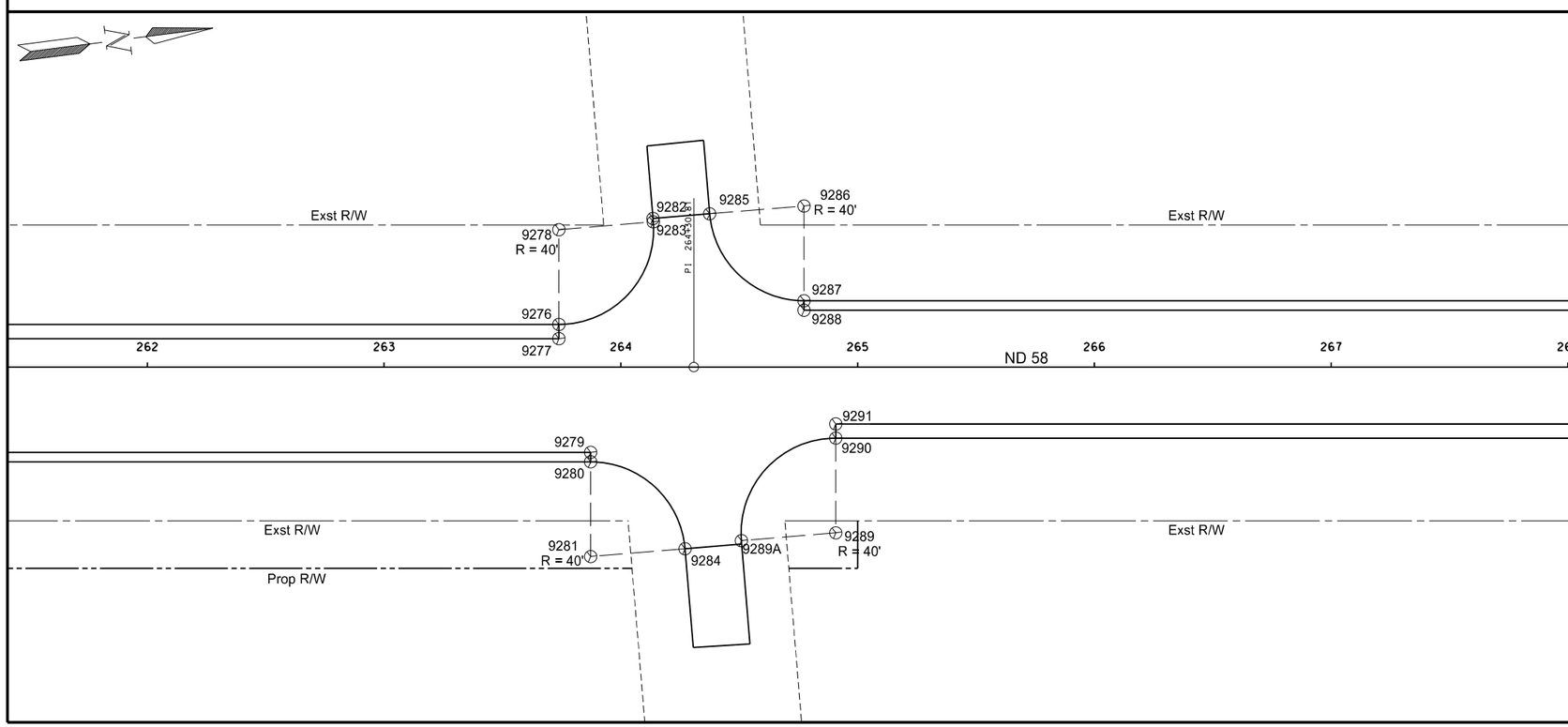

Point	North	East	Station	Offset
9271	360194.7853	1103612.2625	256+77.06	30.00
9272	360195.7483	1103606.3369	256+77.25	24.00
9273	360195.4933	1103608.3206	256+77.25	26.00
9274	360372.1303	1103645.1366	258+57.14	40.00
9275	360372.7503	1103641.1834	258+57.25	36.00
9276	360891.9994	1103653.4717	263+73.83	-18.00
9277	360891.2346	1103659.4227	263+73.83	-12.00
9278	360897.0982	1103613.7979	263+73.83	-58.00
9279	360898.4269	1103708.7418	263+87.25	36.00
9280	360897.9170	1103712.7092	263+87.25	40.00
9281	360892.8183	1103752.3829	263+87.25	80.00
9282	360937.1220	1103614.1780	264+13.58	-62.72
9283	360937.0571	1103615.6093	264+13.70	-61.30
9284	360932.7772	1103754.1942	264+27.12	76.70
9285	360961.0974	1103615.2648	264+37.50	-64.70
9286	361001.0564	1103617.0761	264+77.36	-68.00
9287	360995.9576	1103656.7498	264+77.36	-28.00
9288	360995.4478	1103660.7172	264+77.36	-24.00
9289	360996.7765	1103755.6610	264+90.78	70.00
9289A	360956.8175	1103753.8497	264+59.91	73.29
9290	361001.8752	1103715.9873	264+90.78	30.00
9291	361002.6400	1103710.0363	264+90.78	24.00

This document was originally issued and sealed by William Doerr, Registration Number PE- 7113, on 12/04/15 and the original document is stored at the North Dakota Department of Transportation

Survey Data Points

ND 58

Jct 200 to Jct 1804

STATE	PROJECT NO.	SECTION NO.	SHEET NO.
ND	SOIB-7-058(013)000	82	24

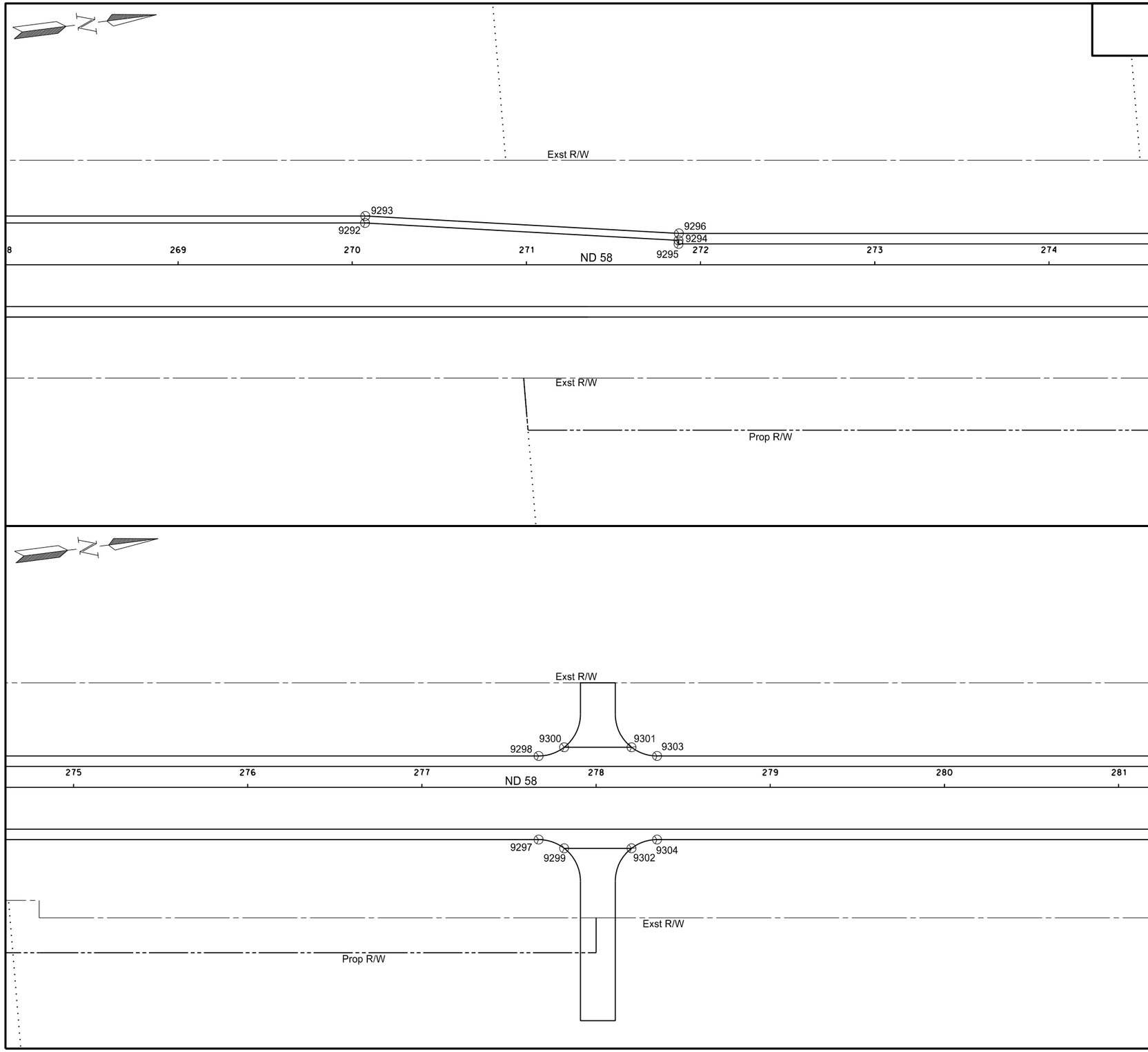

Point	North	East	Station	Offset
9292	361521.1243	1103728.2754	270+07.36	-24.00
9293	361521.7443	1103724.3222	270+07.47	-28.00
9294	361698.3813	1103761.1382	271+87.36	-14.00
9295	361698.1264	1103763.1219	271+87.36	-12.00
9296	361699.0894	1103757.1963	271+87.56	-18.00
9297	362267.6816	1103878.6647	277+67.00	30.00
9298	362273.8001	1103831.0563	277+67.00	-18.00
9299	362281.5876	1103885.4930	277+81.66	35.00
9300	362288.9807	1103827.9661	277+81.66	-23.00
9301	362327.3395	1103832.8959	278+20.34	-23.00
9302	362319.9463	1103890.4227	278+20.34	35.00
9303	362341.2454	1103839.7241	278+35.00	-18.00
9304	362335.1269	1103887.3326	278+35.00	30.00

This document was originally issued and sealed by William Doerr, Registration Number PE- 7113, on 12/04/15 and the original document is stored at the North Dakota Department of Transportation

Survey Data Points

ND 58

Jct 200 to Jct 1804

STATE	PROJECT NO.	SECTION NO.	SHEET NO.
ND	SOIB-7-058(013)000	82	25

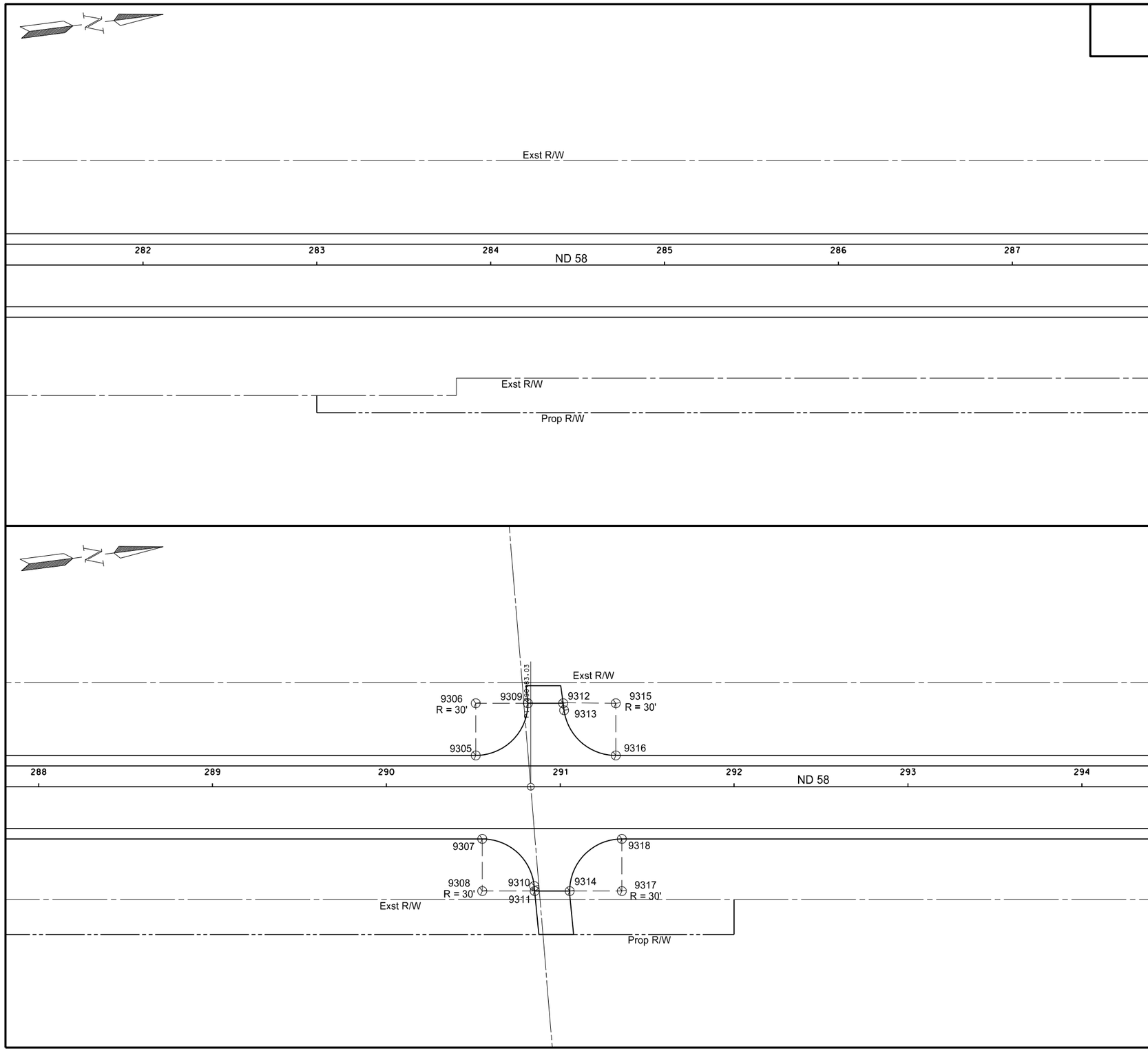

Point	North	East	Station	Offset
9305	363547.7241	1103994.7769	290+51.40	-18.00
9306	363551.5482	1103965.0216	290+51.40	-48.00
9307	363545.3308	1104042.8641	290+55.16	30.00
9308	363541.5067	1104072.6194	290+55.16	60.00
9309	363581.3035	1103968.8457	290+81.40	-48.00
9310	363571.4916	1104073.5728	290+85.02	57.12
9311	363571.3997	1104076.4611	290+85.30	60.00
9312	363601.4092	1103971.4296	291+01.67	-48.00
9313	363601.4400	1103975.5149	291+02.22	-43.95
9314	363591.3682	1104079.0274	291+05.43	60.00
9315	363631.4391	1103975.2890	291+31.95	-48.00
9316	363627.6151	1104005.0443	291+31.95	-18.00
9317	363621.1235	1104082.8515	291+35.43	60.00
9318	363624.9476	1104053.0962	291+35.43	30.00

This document was originally issued and sealed by William Doerr, Registration Number PE- 7113, on 12/04/15 and the original document is stored at the North Dakota Department of Transportation

Survey Data Points

ND 58

Jct 200 to Jct 1804

STATE	PROJECT NO.	SECTION NO.	SHEET NO.
ND	SOIB-7-058(013)000	82	26

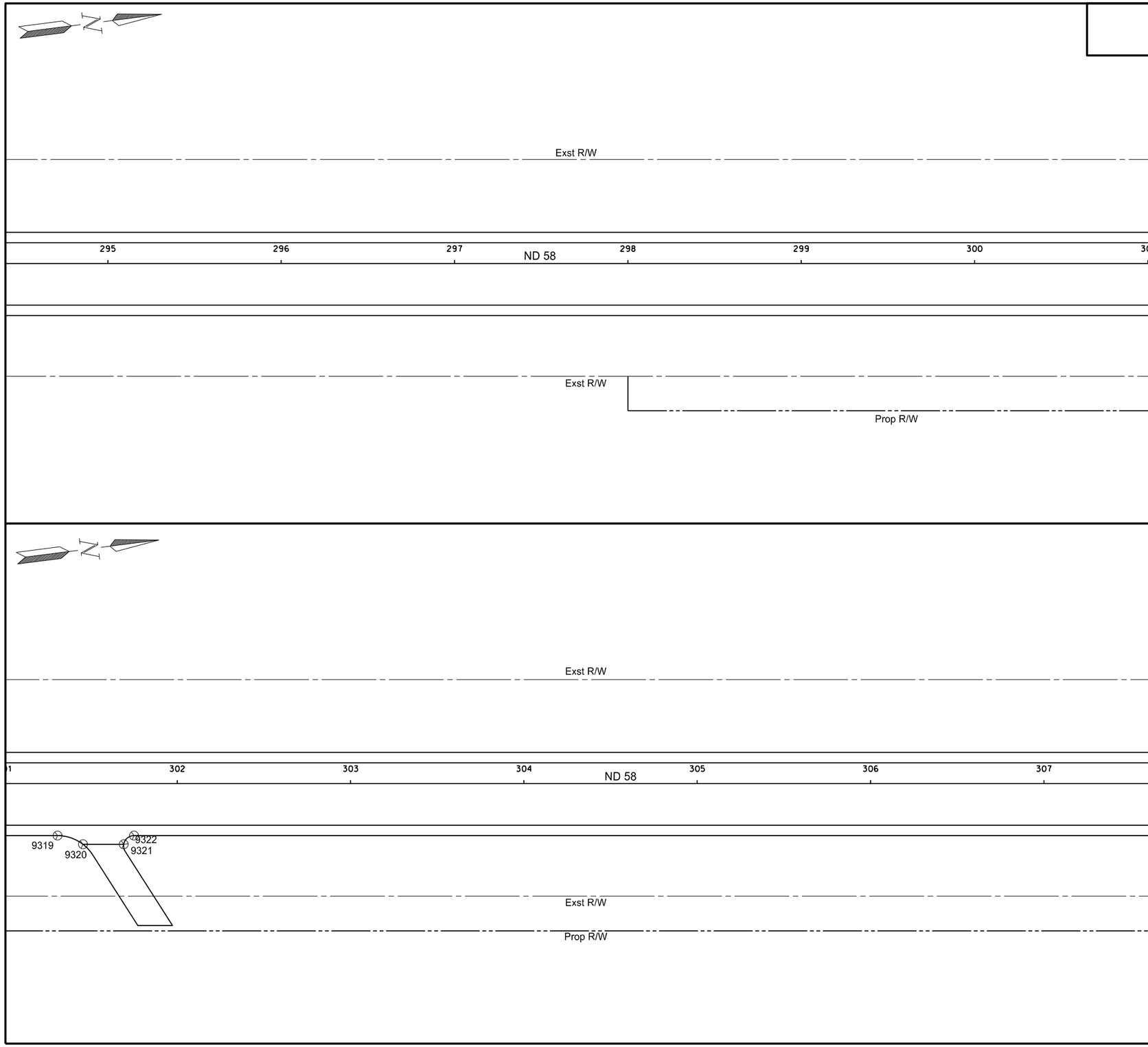

Point	North	East	Station	Offset
9319	364612.3772	1104179.9979	301+30.98	30.00
9320	364626.2831	1104186.8262	301+45.64	35.00
9321	364649.6122	1104189.8244	301+69.16	35.00
9322	364656.1174	1104185.6193	301+75.08	30.00

This document was originally issued and sealed by William Doerr, Registration Number PE- 7113, on 12/04/15 and the original document is stored at the North Dakota Department of Transportation

Survey Data Points

ND 58

Jct 200 to Jct 1804

STATE	PROJECT NO.	SECTION NO.	SHEET NO.
ND	SOIB-7-058(013)000	82	27

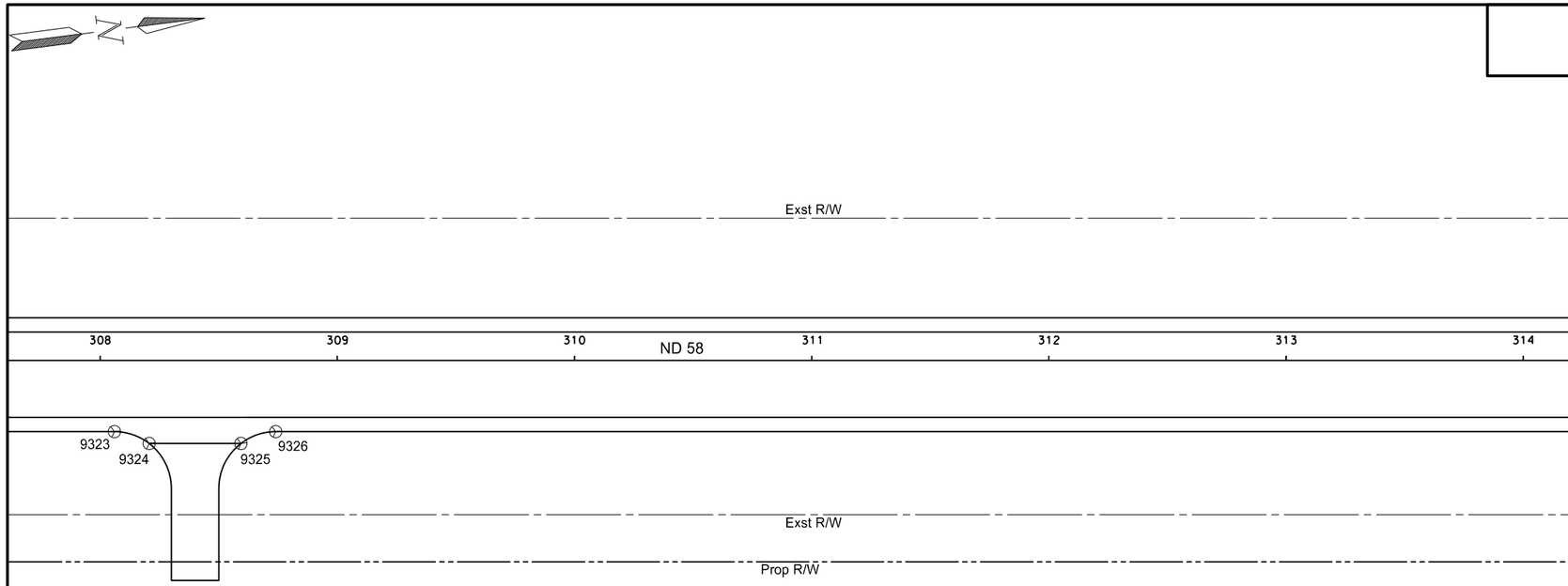

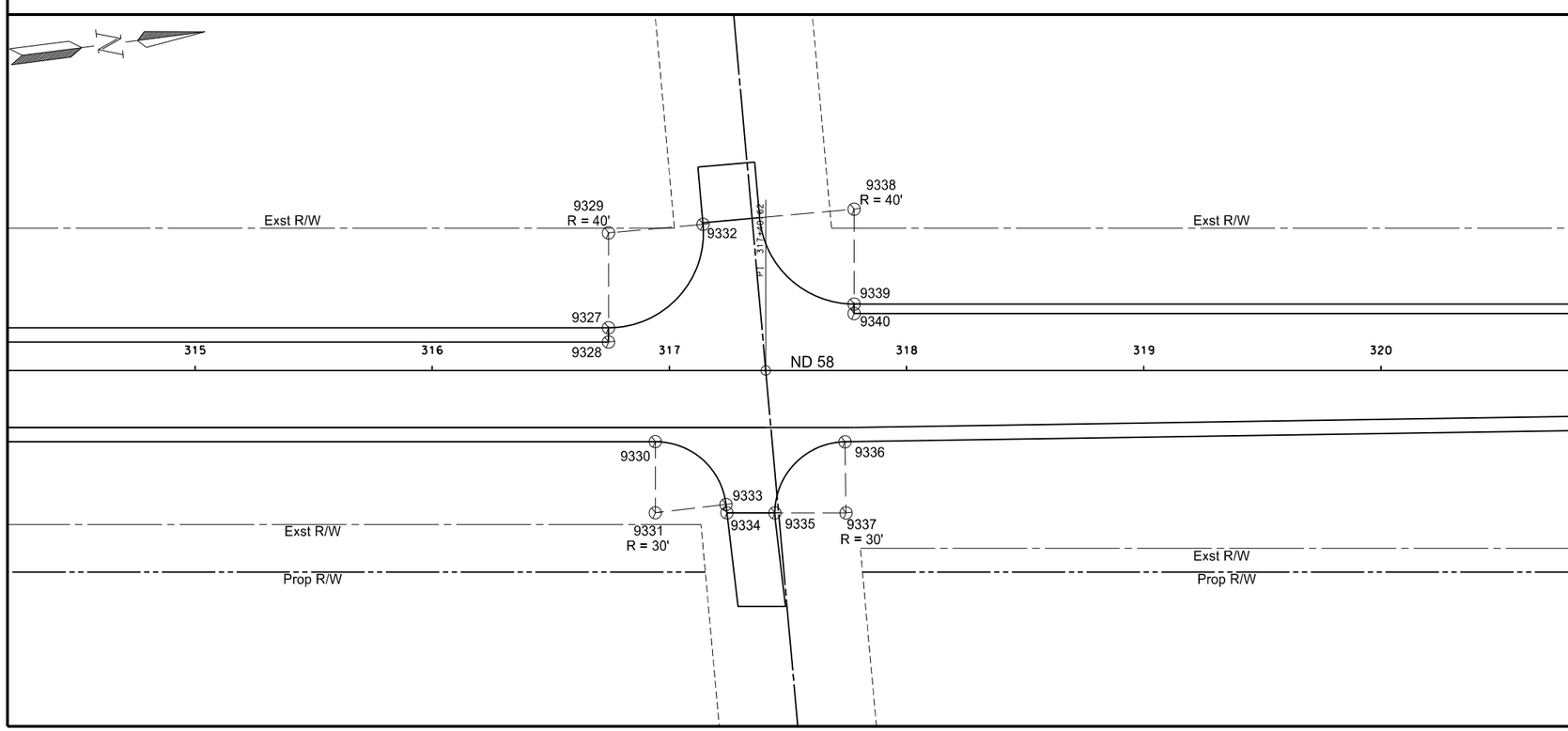

Point	North	East	Station	Offset
9323	365281.8913	1104266.0420	308+06.00	30.00
9324	365295.7972	1104272.8703	308+20.66	35.00
9325	365334.1560	1104277.8001	308+59.34	35.00
9326	365349.3366	1104274.7099	308+74.00	30.00
9327	366149.2692	1104329.1203	316+74.34	-18.00
9328	366148.5044	1104335.0713	316+74.34	-12.00
9329	366154.3679	1104289.4466	316+74.34	-58.00
9330	366162.7051	1104379.2418	316+94.06	30.00
9331	366158.8810	1104408.9971	316+94.06	60.00
9332	366194.3397	1104290.9491	317+14.18	-61.60
9333	366188.8794	1104409.3096	317+23.85	56.49
9334	366188.8423	1104412.8705	317+24.27	60.02
9335	366208.8794	1104415.4609	317+44.47	60.04
9336	366241.9982	1104389.4928	317+74.01	30.06
9337	366238.6323	1104419.3034	317+74.47	60.06
9338	366258.3182	1104292.7237	317+77.86	-68.00
9339	366253.2194	1104332.3974	317+77.86	-28.00
9340	366252.7096	1104336.3648	317+77.86	-24.00

This document was originally issued and sealed by William Doerr, Registration Number PE- 7113, on 12/04/15 and the original document is stored at the North Dakota Department of Transportation

Survey Data Points

ND 58

Jct 200 to Jct 1804

STATE	PROJECT NO.	SECTION NO.	SHEET NO.
ND	SOIB-7-058(013)000	82	28

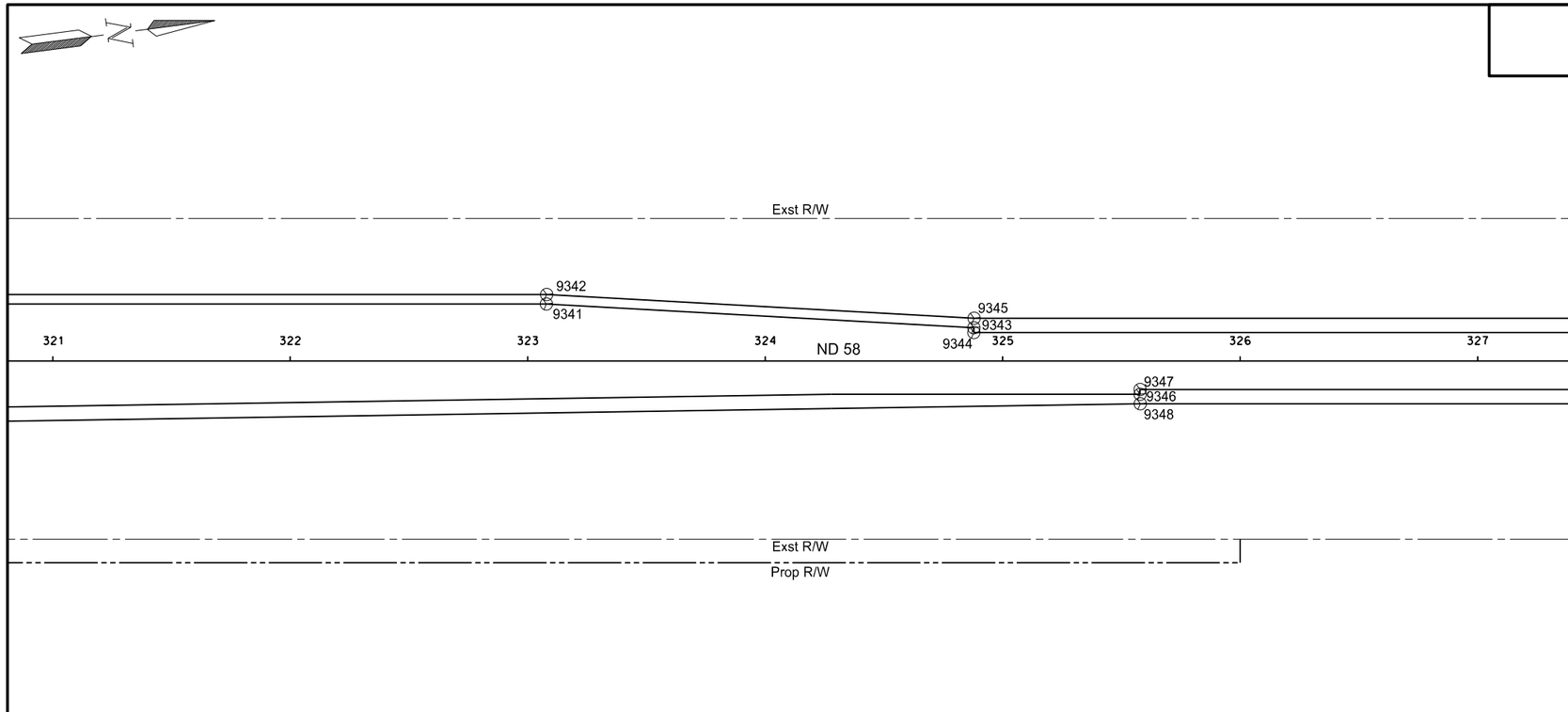

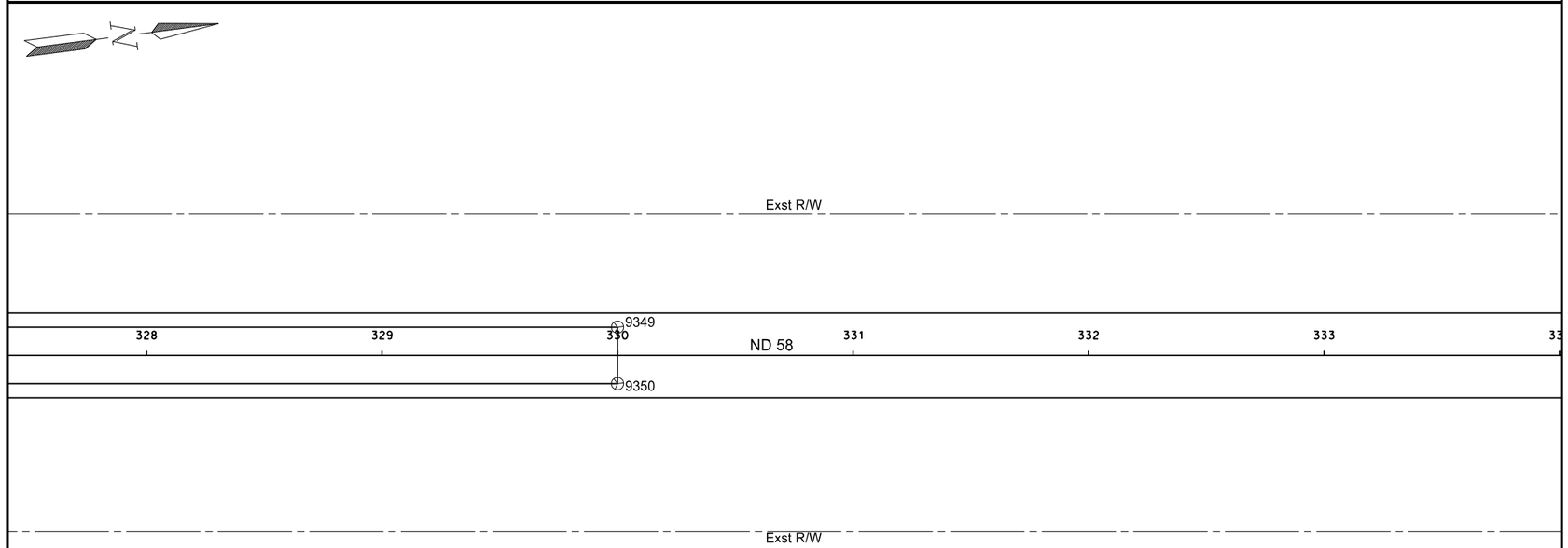

Point	North	East	Station	Offset
9341	366778.3862	1104403.9232	323+07.86	-24.00
9342	366779.0061	1104399.9700	323+07.97	-28.00
9343	366955.6431	1104436.7860	324+87.86	-14.00
9344	366955.3882	1104438.7697	324+87.86	-12.00
9345	366956.2631	1104432.8327	324+87.97	-18.00
9346	367021.5030	1104473.4804	325+57.86	14.00
9347	367021.7579	1104471.4967	325+57.86	12.00
9348	367021.0848	1104477.4588	325+57.96	18.00
9349	367463.3458	1104504.0508	330+00.00	-12.00
9350	367460.2865	1104527.8551	330+00.00	12.00

This document was originally issued and sealed by William Doerr, Registration Number PE- 7113, on 12/04/15 and the original document is stored at the North Dakota Department of Transportation

Survey Data Points

ND 58

Jct 200 to Jct 1804

STATE	PROJECT NO.	SECTION NO.	SHEET NO.
ND	SOIB-7-058(013)000	82	29

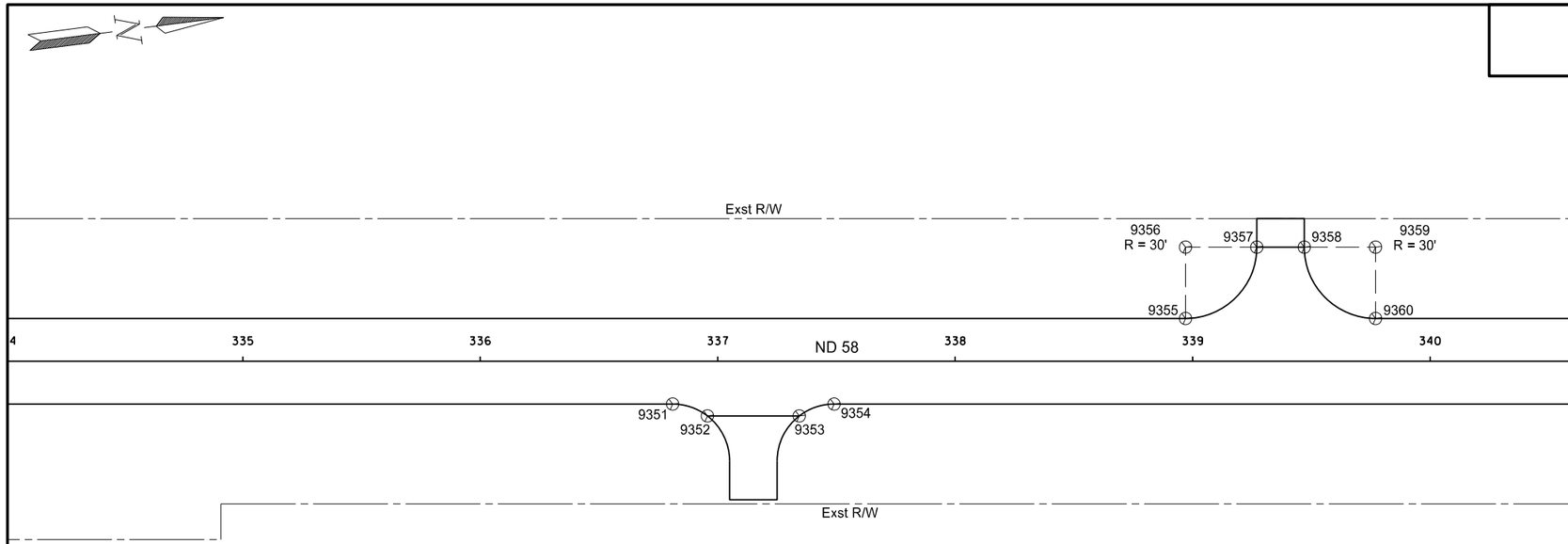

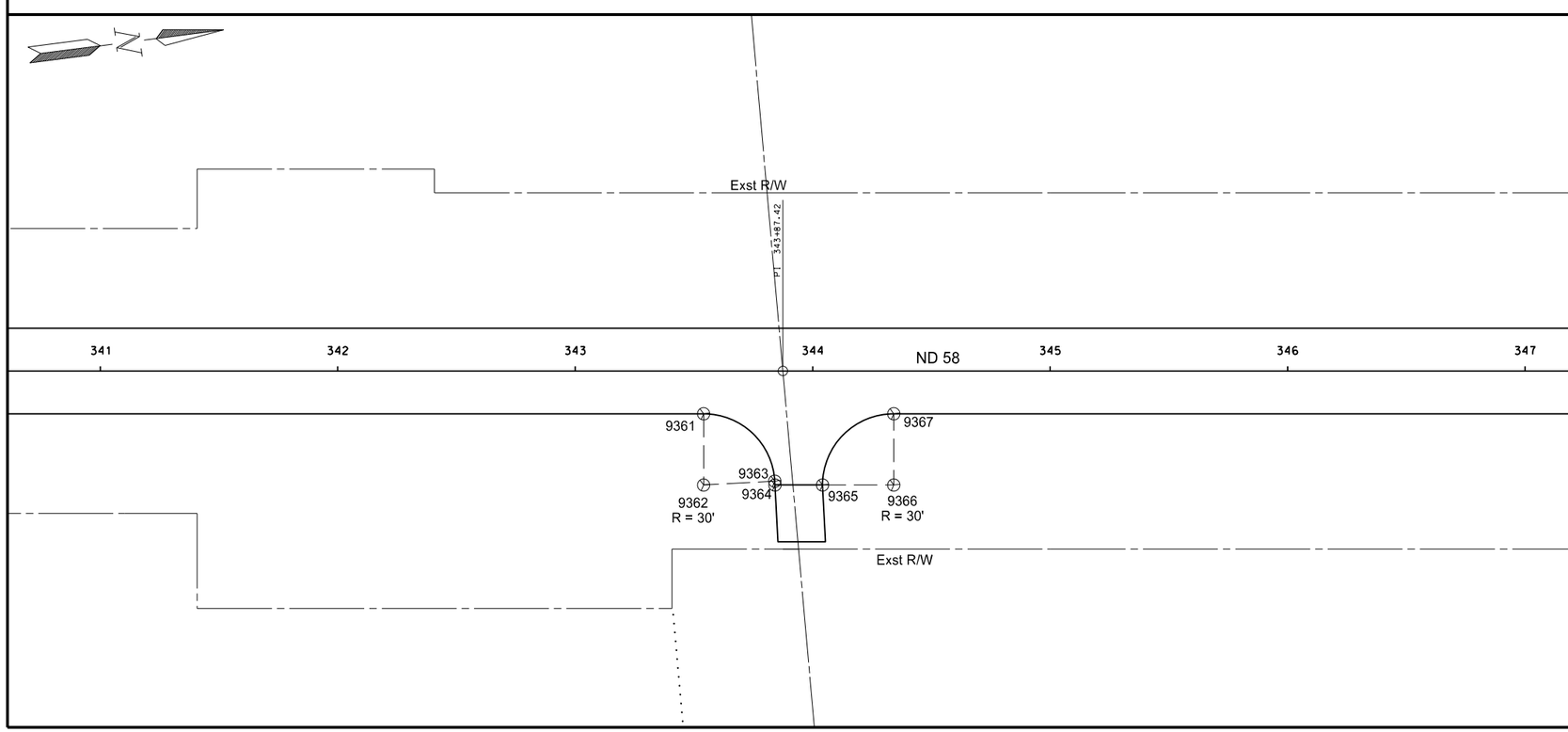

Point	North	East	Station	Offset
9351	368134.9683	1104620.6125	336+81.00	18.00
9352	368148.8743	1104627.4408	336+95.66	23.00
9353	368187.2330	1104632.3705	337+34.34	23.00
9354	368202.4136	1104629.2804	337+49.00	18.00
9355	368353.7949	1104612.4394	338+97.00	-18.00
9356	368357.6190	1104582.6841	338+97.00	-48.00
9357	368387.3740	1104586.5101	339+27.00	-48.00
9358	368407.2115	1104589.0595	339+47.00	-48.00
9359	368436.9670	1104592.8817	339+77.00	-48.00
9360	368433.1429	1104622.6369	339+77.00	-18.00
9361	368802.5440	1104706.4074	343+54.07	18.00
9362	368798.7199	1104736.1626	343+54.07	48.00
9363	368828.6379	1104738.3796	343+84.02	46.39
9364	368828.5184	1104739.9922	343+84.11	48.00
9365	368848.3952	1104742.5467	344+04.15	48.00
9366	368878.1505	1104746.3708	344+34.15	48.00
9367	368881.9745	1104716.6155	344+34.15	18.00

This document was originally issued and sealed by William Doerr, Registration Number PE- 7113, on 12/04/15 and the original document is stored at the North Dakota Department of Transportation

Survey Data Points

ND 58

Jct 200 to Jct 1804

STATE	PROJECT NO.	SECTION NO.	SHEET NO.
ND	SOIB-7-058(013)000	82	30

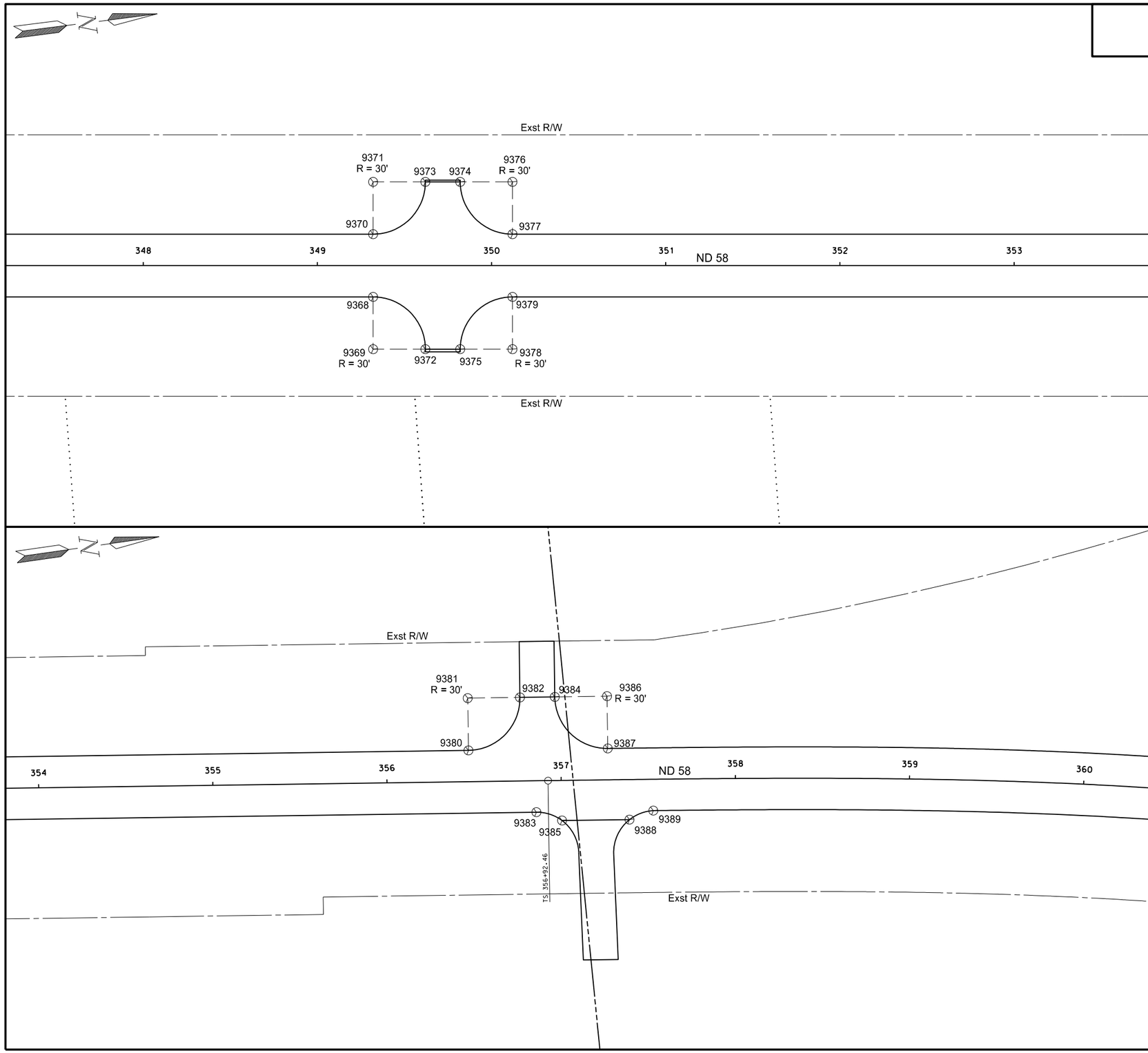

Point	North	East	Station	Offset
9368	369375.7636	1104780.0756	349+32.00	18.00
9369	369371.9395	1104809.8308	349+32.00	48.00
9370	369380.3525	1104744.3692	349+32.00	-18.00
9371	369384.1765	1104714.6139	349+32.00	-48.00
9372	369401.6958	1104813.6473	349+62.00	47.99
9373	369413.9306	1104718.4472	349+62.00	-47.99
9374	369433.7672	1104720.9963	349+82.00	-47.99
9375	369421.5325	1104816.1964	349+82.00	47.99
9376	369463.5236	1104724.8114	350+12.00	-48.00
9377	369459.6996	1104754.5666	350+12.00	-18.00
9378	369451.2868	1104820.0283	350+12.00	48.00
9379	369455.1108	1104790.2730	350+12.00	18.00
9380	370089.5194	1104835.5089	356+47.00	-18.00
9381	370093.3435	1104805.7536	356+47.00	-48.00
9382	370123.0987	1104809.5785	356+77.00	-48.00
9383	370123.1452	1104876.1264	356+85.53	18.00
9384	370142.9354	1104812.1350	356+97.00	-47.99
9385	370137.0374	1104882.9409	357+00.18	22.99
9386	370172.6908	1104815.9582	357+26.96	-48.00
9387	370168.8641	1104845.7151	357+26.98	-18.00
9388	370175.4403	1104887.9095	357+38.93	23.00
9389	370189.7152	1104884.7298	357+52.69	18.00

This document was originally issued and sealed by William Doerr, Registration Number PE- 7113, on 12/04/15 and the original document is stored at the North Dakota Department of Transportation

Survey Data Points

ND 58

Jct 200 to Jct 1804

STATE	PROJECT NO.	SECTION NO.	SHEET NO.
ND	SOIB-7-058(013)000	82	31

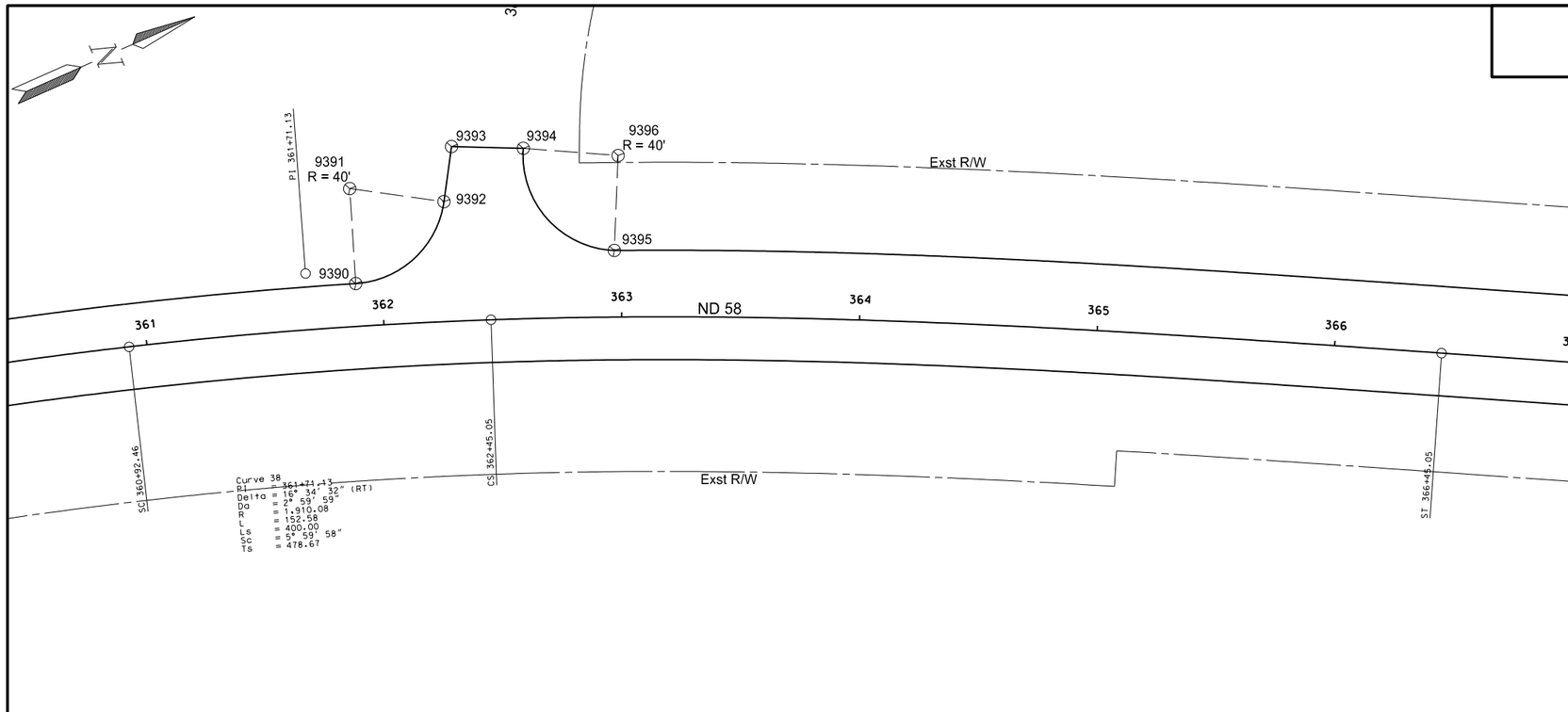

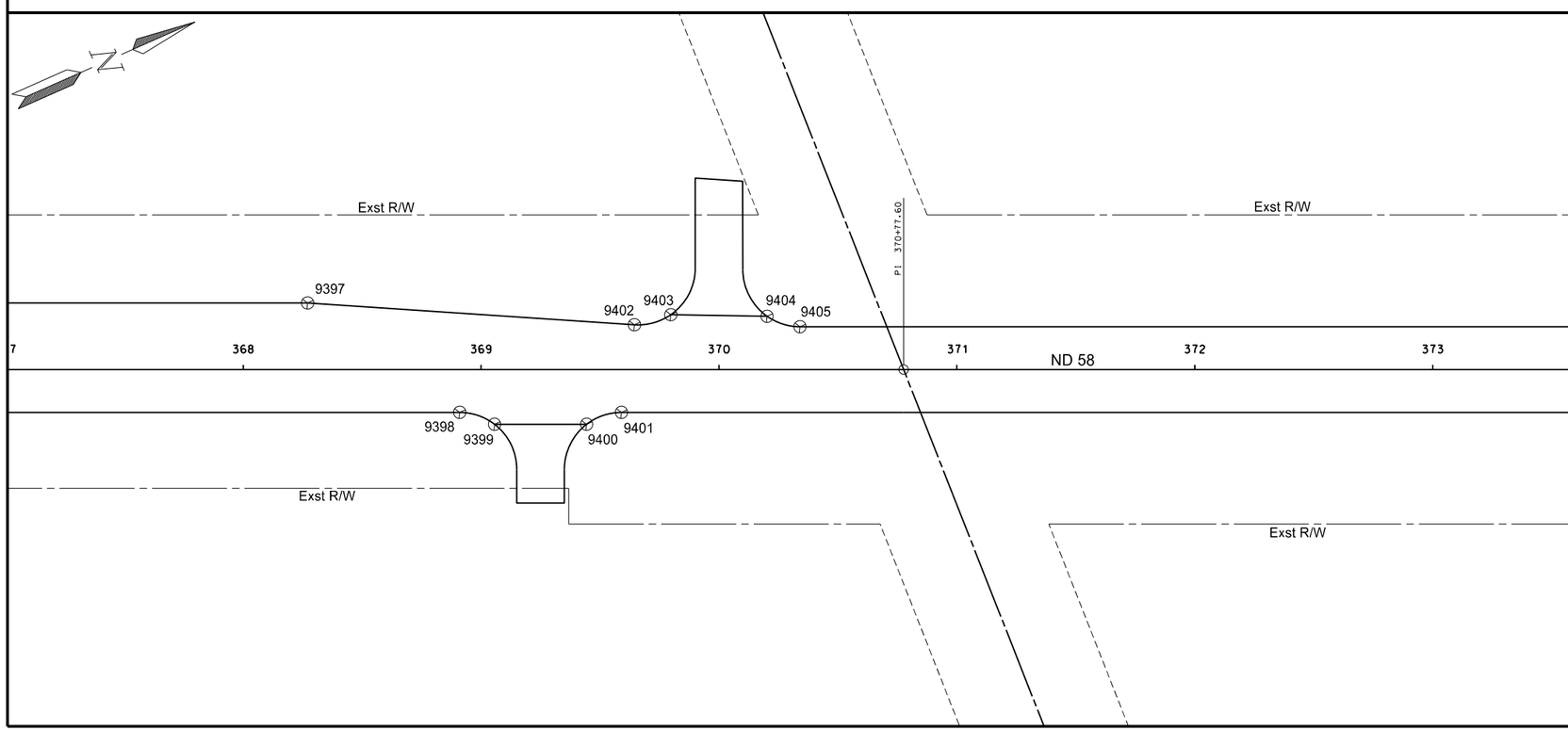

Point	North	East	Station	Offset
9390	370625.4844	1104931.3319	361+89.29	-18.00
9391	370636.6622	1104892.9254	361+89.29	-58.00
9392	370672.0773	1104911.5203	362+27.48	-50.43
9393	370682.9439	1104890.8242	362+31.52	-73.44
9394	370711.0516	1104901.7741	362+60.54	-71.67
9395	370732.4006	1104955.2160	362+97.14	-28.00
9396	370747.5315	1104918.1819	362+99.08	-67.96
9397	371222.4838	1105162.2414	368+27.08	-28.00
9398	371262.2862	1105230.1924	368+91.00	18.00
9399	371273.6663	1105240.7040	369+05.66	23.00
9400	371309.0247	1105256.3719	369+44.34	23.00
9401	371324.4560	1105257.7408	369+59.00	18.00
9402	371344.3712	1105226.2691	369+64.46	-18.84
9403	371360.0580	1105228.5916	369+79.74	-23.07
9404	371396.7693	1105245.6023	370+20.20	-22.39
9405	371407.6442	1105255.2269	370+34.04	-18.00

This document was originally issued and sealed by William Doerr, Registration Number PE- 7113, on 12/04/15 and the original document is stored at the North Dakota Department of Transportation

Survey Data Points

ND 58

Jct 200 to Jct 1804

STATE	PROJECT NO.	SECTION NO.	SHEET NO.
ND	SOIB-7-058(013)000	82	32

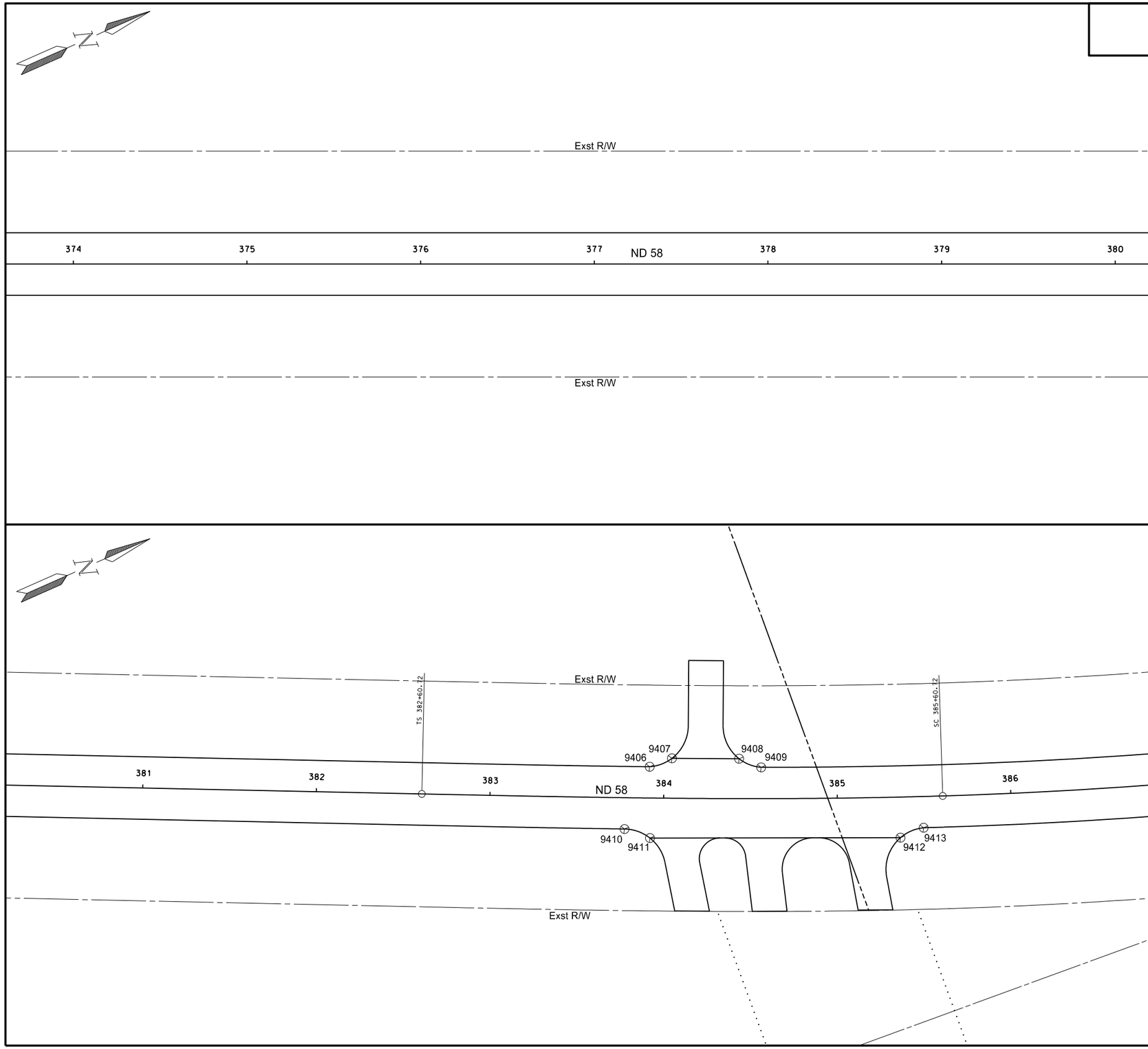

Point	North	East	Station	Offset
9406	372621.7813	1105832.3081	383+77.72	18.04
9407	372648.9688	1105804.8008	383+91.76	-18.00
9408	372633.3087	1105842.7374	383+92.40	23.04
9409	372662.6816	1105805.2694	384+04.58	-22.99
9410	372698.2798	1105820.3844	384+43.43	-22.99
9411	372708.0558	1105829.8808	384+56.17	-18.00
9412	372766.4969	1105898.1527	385+35.87	23.36
9413	372780.9755	1105898.0314	385+49.23	18.00

This document was originally issued and sealed by William Doerr, Registration Number PE- 7113, on 12/04/15 and the original document is stored at the North Dakota Department of Transportation

Survey Data Points

ND 58

Jct 200 to Jct 1804

STATE	PROJECT NO.	SECTION NO.	SHEET NO.
ND	SOIB-7-058(013)000	82	33

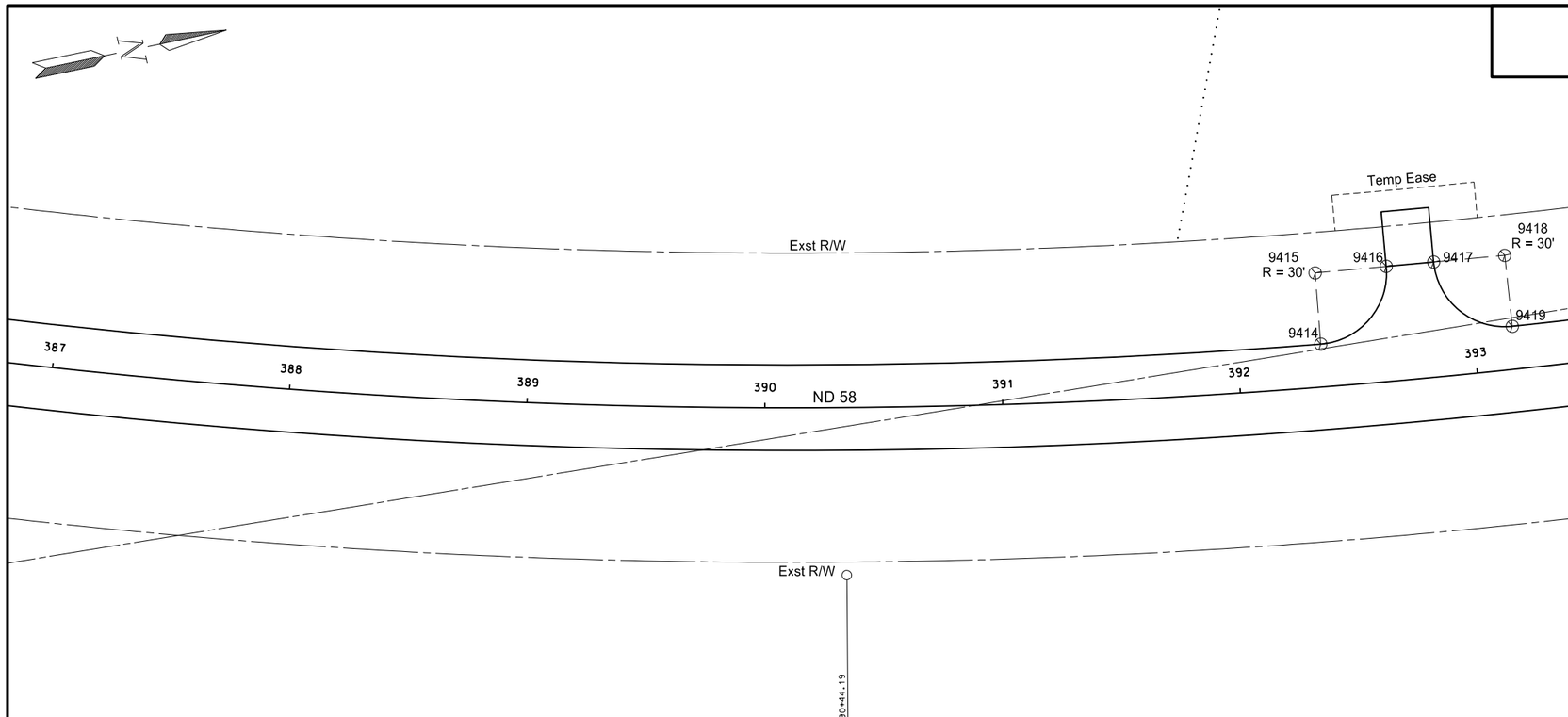

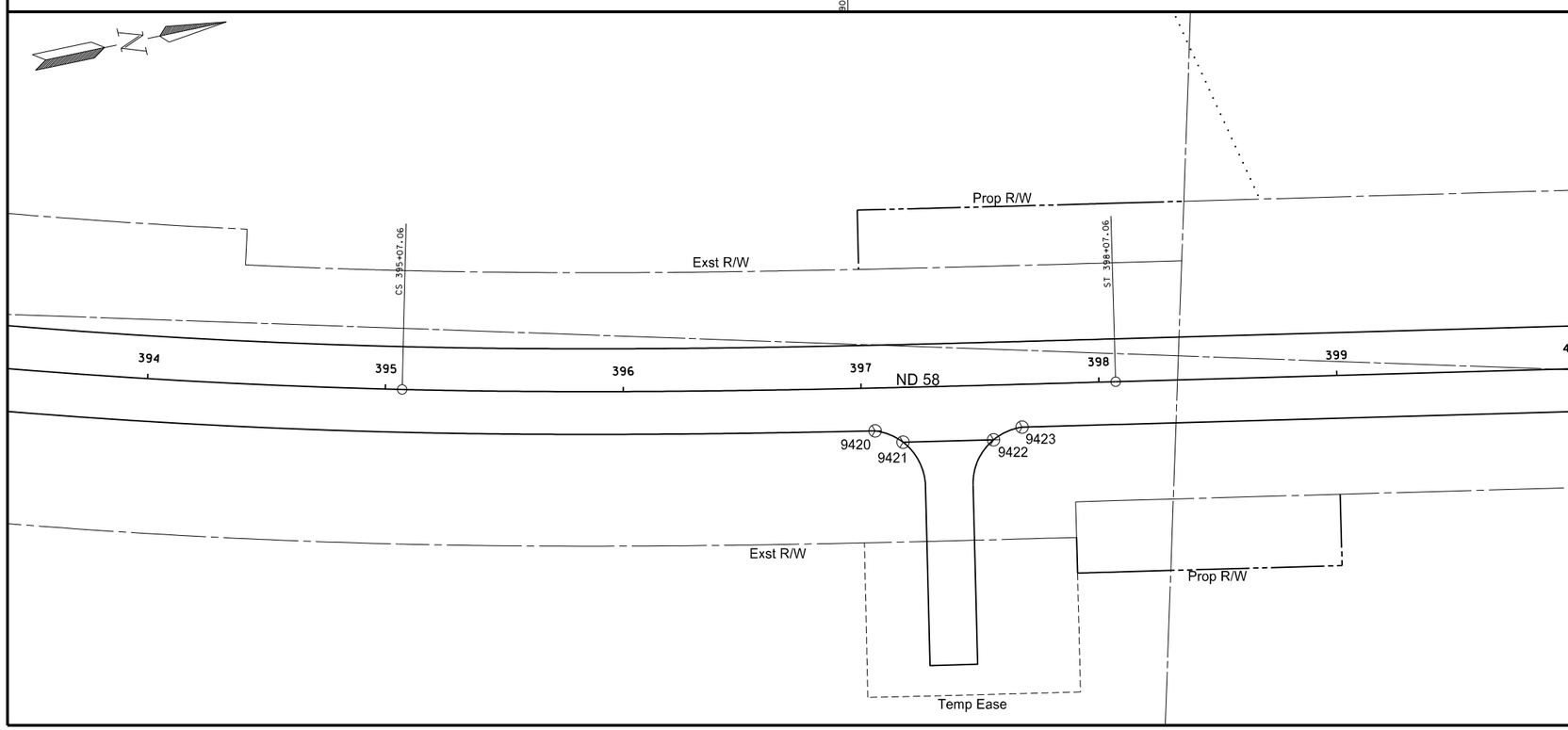

Point	North	East	Station	Offset
9414	373453.1216	1106032.0819	392+35.32	-18.00
9415	373456.9894	1106002.3323	392+35.32	-48.00
9416	373486.7918	1106005.7697	392+65.84	-48.27
9417	373506.6583	1106008.0837	392+86.18	-48.26
9418	373536.4609	1106011.5191	393+16.69	-48.00
9419	373533.4394	1106041.3665	393+16.69	-18.00
9420	373920.1471	1106091.6192	397+05.49	18.00
9421	373931.8365	1106096.5010	397+17.09	23.03
9422	373969.8907	1106095.9061	397+55.08	23.00
9423	373981.9555	1106090.7028	397+67.21	18.00

This document was originally issued and sealed by William Doerr, Registration Number PE- 7113, on 12/04/15 and the original document is stored at the North Dakota Department of Transportation

Survey Data Points

ND 58

Jct 200 to Jct 1804

STATE	PROJECT NO.	SECTION NO.	SHEET NO.
ND	SOIB-7-058(013)000	82	34

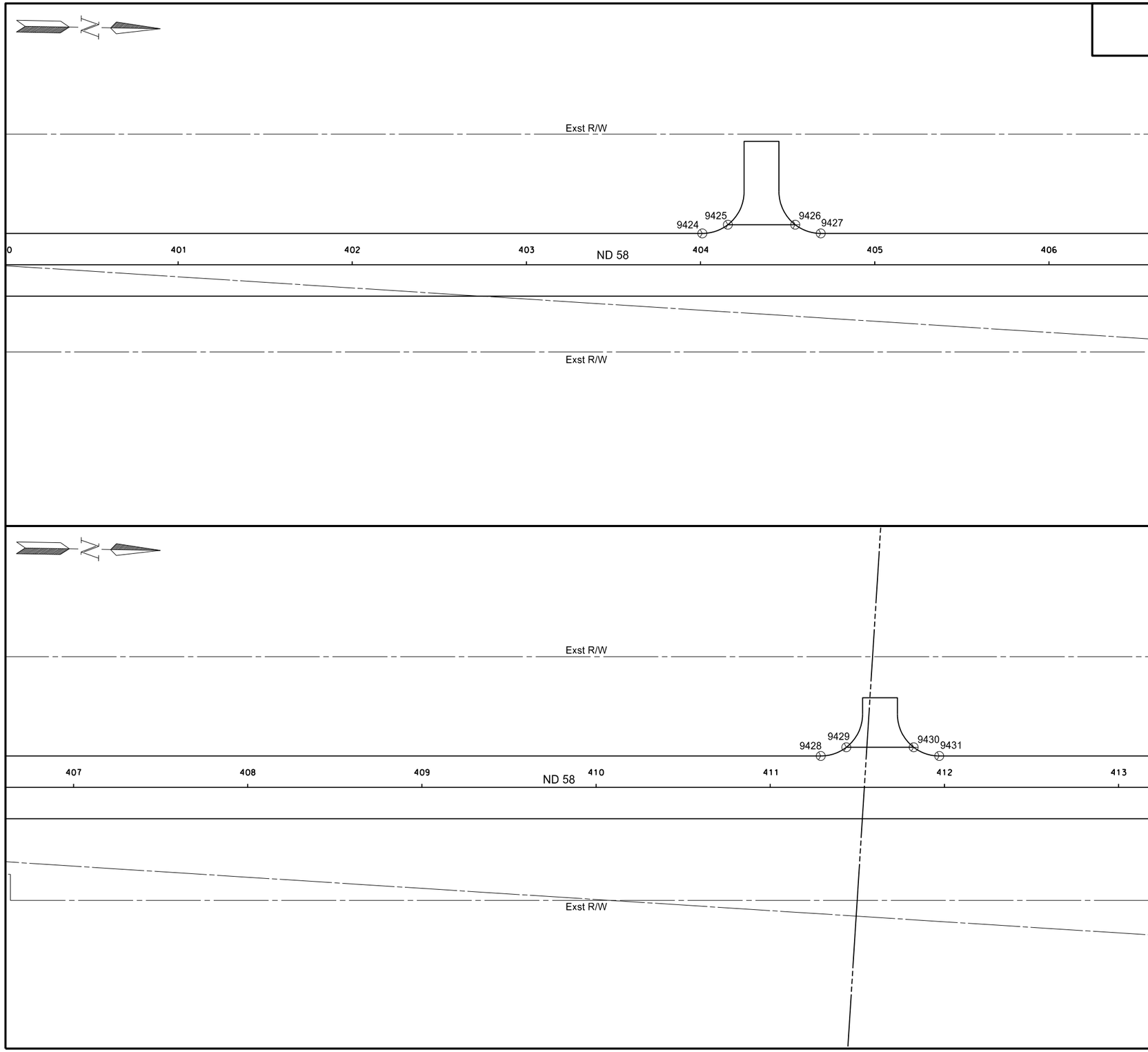

Point	North	East	Station	Offset
9424	374615.0114	1106043.3642	404+01.00	-18.00
9425	374629.5823	1106038.1023	404+15.66	-23.00
9426	374668.2503	1106037.4093	404+54.34	-23.00
9427	374683.0005	1106042.1457	404+69.00	-18.00
9428	375342.8945	1106030.3197	411+29.00	-18.00
9429	375357.4654	1106025.0577	411+43.66	-23.00
9430	375396.1335	1106024.3648	411+82.34	-23.00
9431	375410.8836	1106029.1012	411+97.00	-18.00

This document was originally issued and sealed by William Doerr, Registration Number PE- 7113, on 12/04/15 and the original document is stored at the North Dakota Department of Transportation

Survey Data Points

ND 58

Jct 200 to Jct 1804

STATE	PROJECT NO.	SECTION NO.	SHEET NO.
ND	SOIB-7-058(013)000	82	35

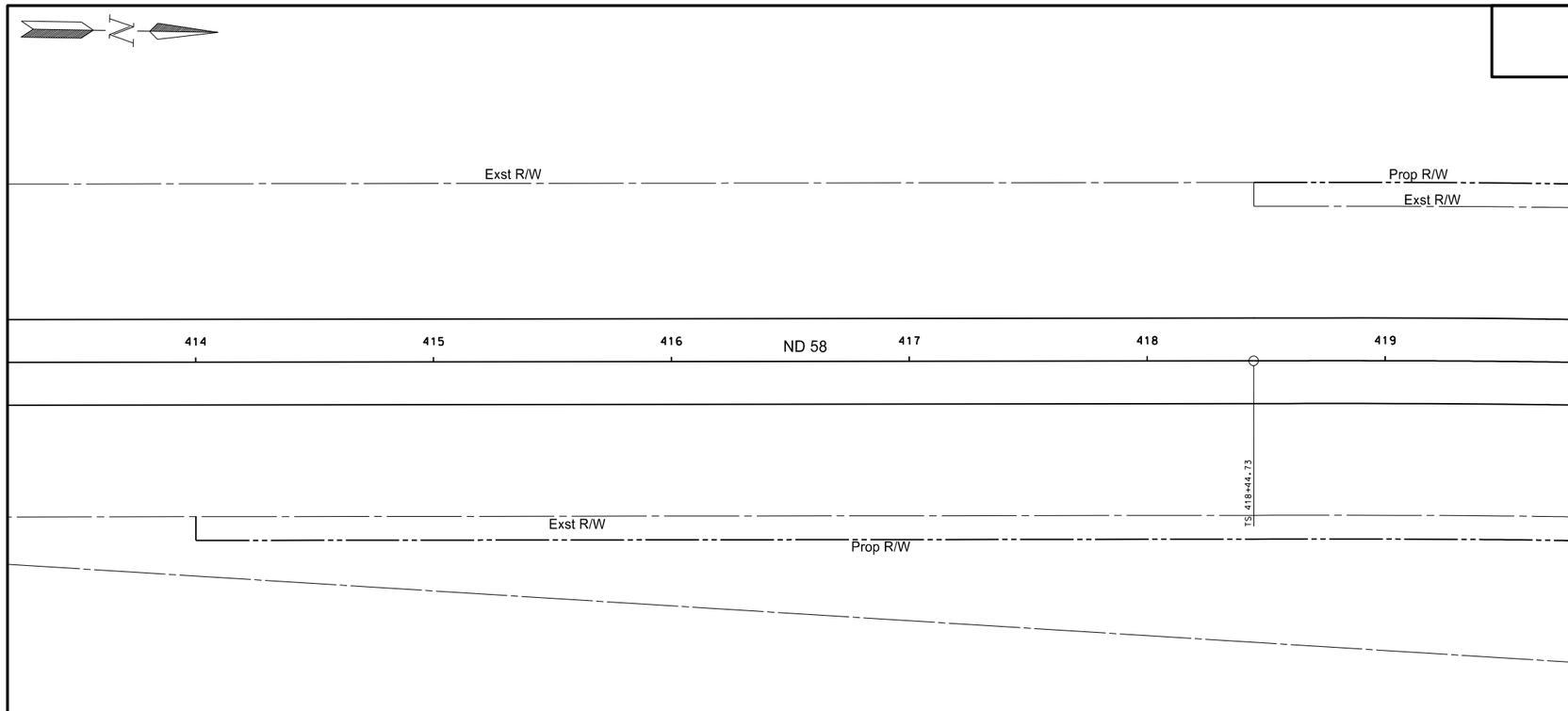

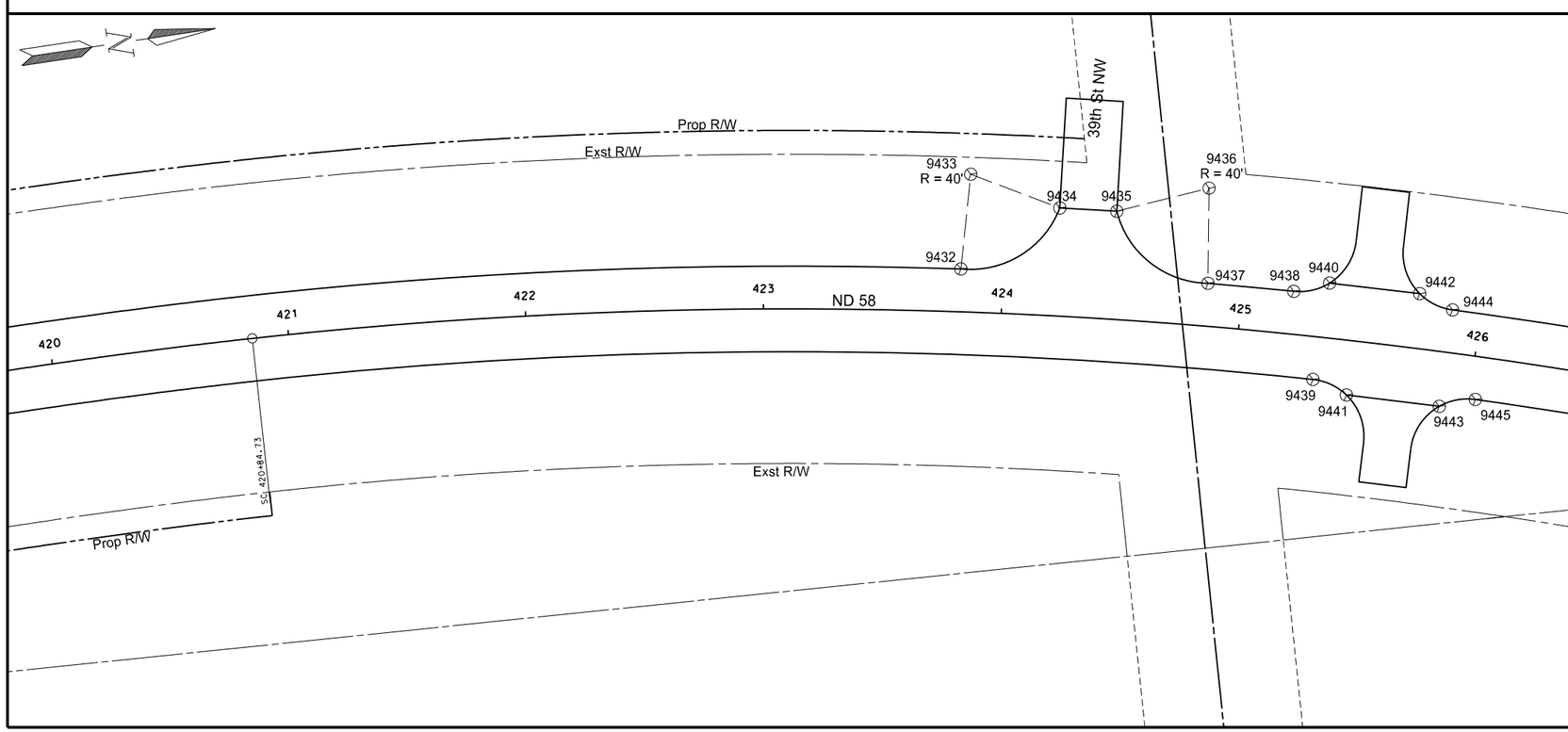

Point	North	East	Station	Offset
9432	376597.6812	1106051.0526	423+82.43	-18.03
9433	376607.6806	1106012.3226	423+85.16	-57.93
9434	376642.5804	1106031.8676	424+22.23	-45.43
9435	376666.0684	1106036.7983	424+45.72	-45.44
9436	376705.8816	1106032.9372	424+82.79	-57.97
9437	376699.4628	1106072.4188	424+85.55	-18.06
9438	376734.6432	1106081.1192	425+21.48	-18.00
9439	376737.1223	1106118.9329	425+33.31	18.00
9440	376750.0601	1106079.9024	425+35.96	-23.03
9441	376750.0681	1106127.4925	425+48.16	22.97
9442	376786.8384	1106089.8898	425+73.65	-23.04
9443	376787.9768	1106137.9939	425+87.93	22.91
9444	376799.5243	1106098.7457	425+88.14	-18.00
9445	376803.3994	1106137.3904	426+02.71	18.00

This document was originally issued and sealed by William Doerr, Registration Number PE- 7113, on 12/04/15 and the original document is stored at the North Dakota Department of Transportation

Survey Data Points

ND 58

Jct 200 to Jct 1804

STATE	PROJECT NO.	SECTION NO.	SHEET NO.
ND	SOIB-7-058(013)000	82	36

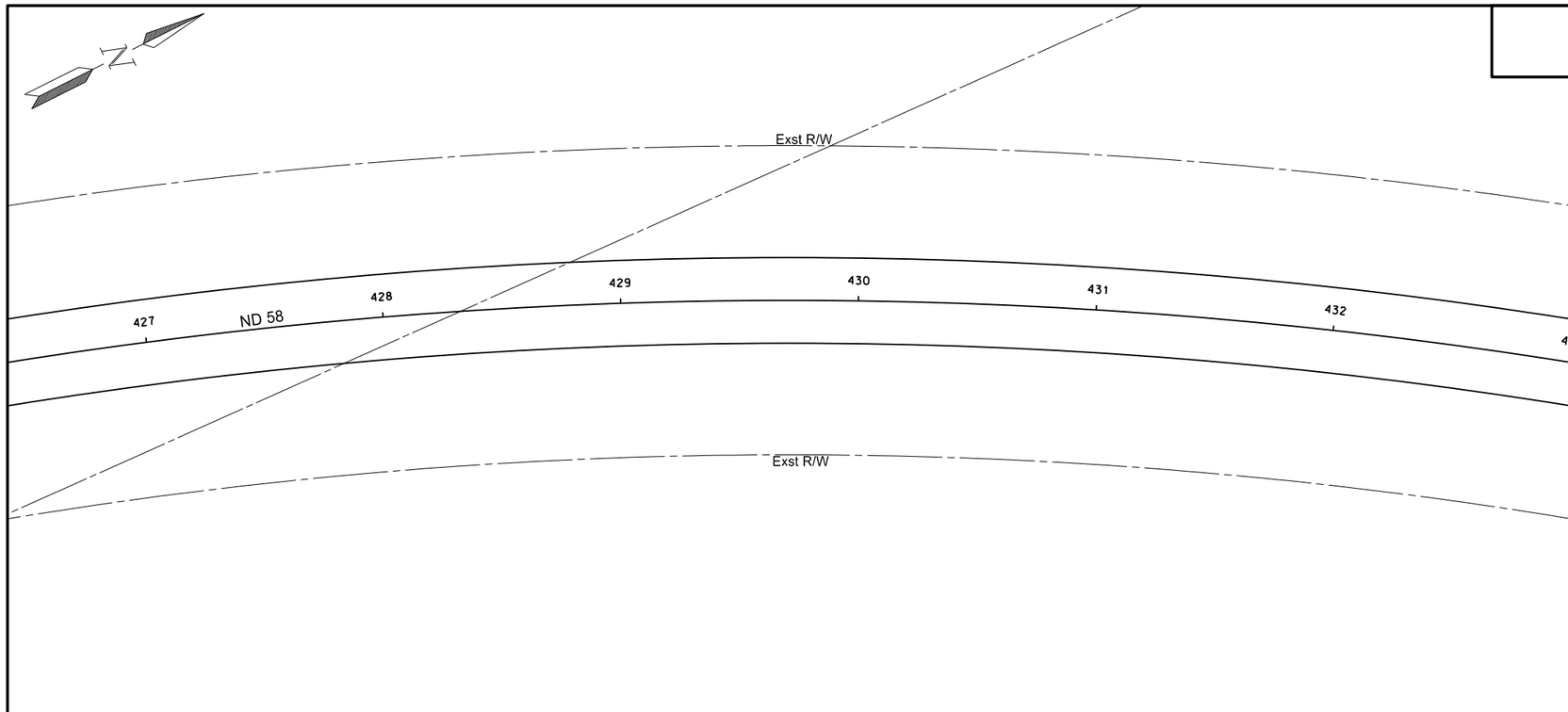

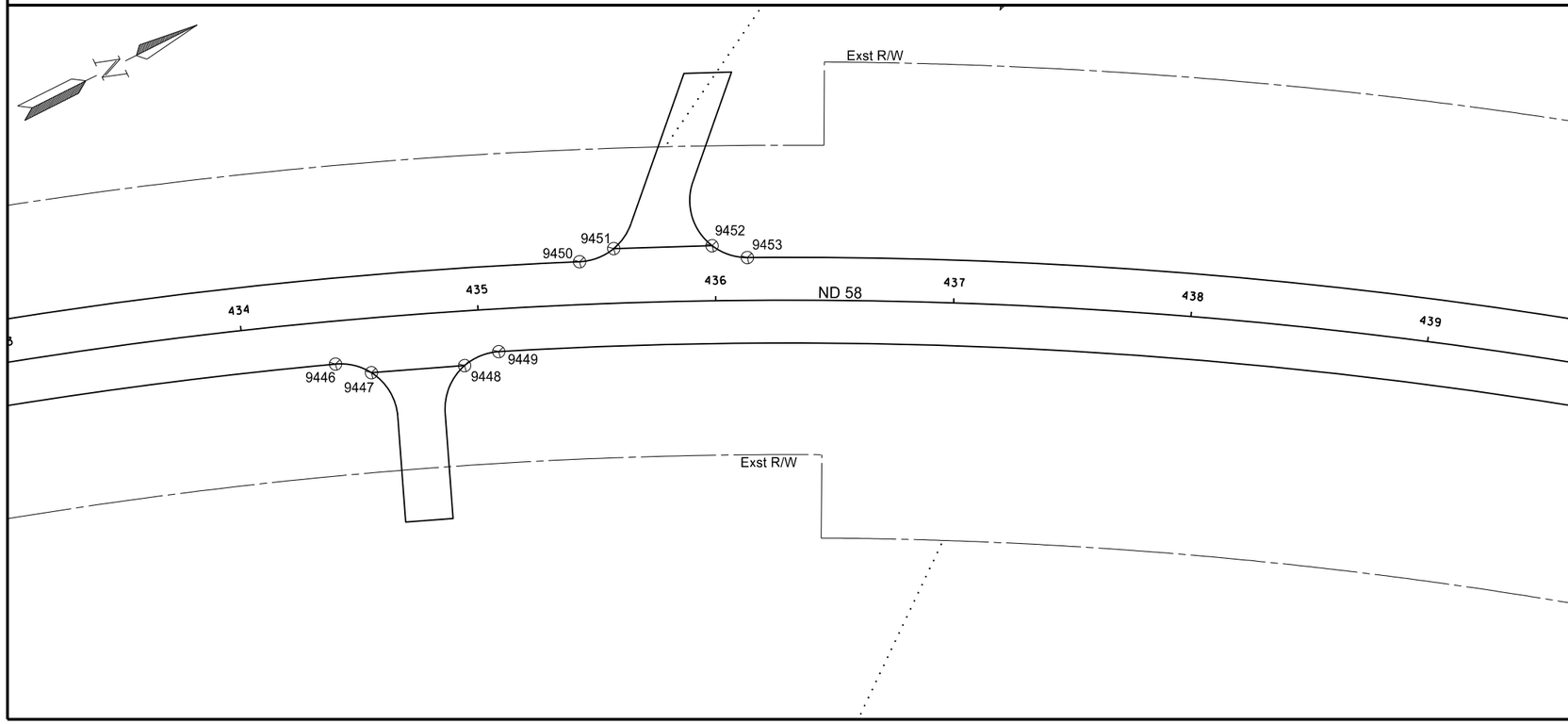

Point	North	East	Station	Offset
9446	377529.8565	1106523.7185	434+38.26	18.00
9447	377537.9977	1106536.9259	434+53.11	22.96
9448	377567.9101	1106562.4045	434+92.84	22.95
9449	377582.2141	1106568.3507	435+07.66	18.00
9450	377632.9260	1106565.4806	435+43.50	-18.00
9451	377647.0283	1106571.6635	435+57.92	-22.99
9452	377677.2017	1106599.9471	435+98.83	-23.13
9453	377684.2196	1106613.8966	436+13.43	-18.00

This document was originally issued and sealed by William Doerr, Registration Number PE- 7113, on 12/04/15 and the original document is stored at the North Dakota Department of Transportation

Survey Data Points

ND 58

Jct 200 to Jct 1804

STATE	PROJECT NO.	SECTION NO.	SHEET NO.
ND	SOIB-7-058(013)000	82	37

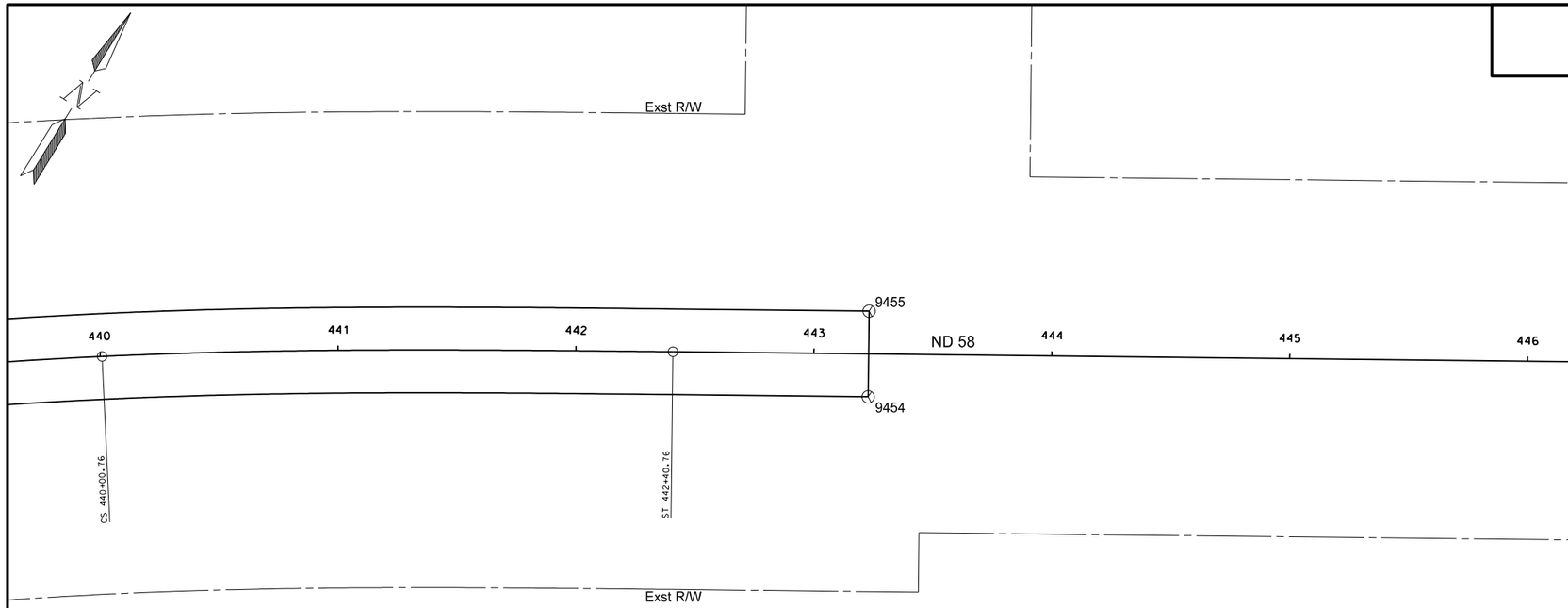

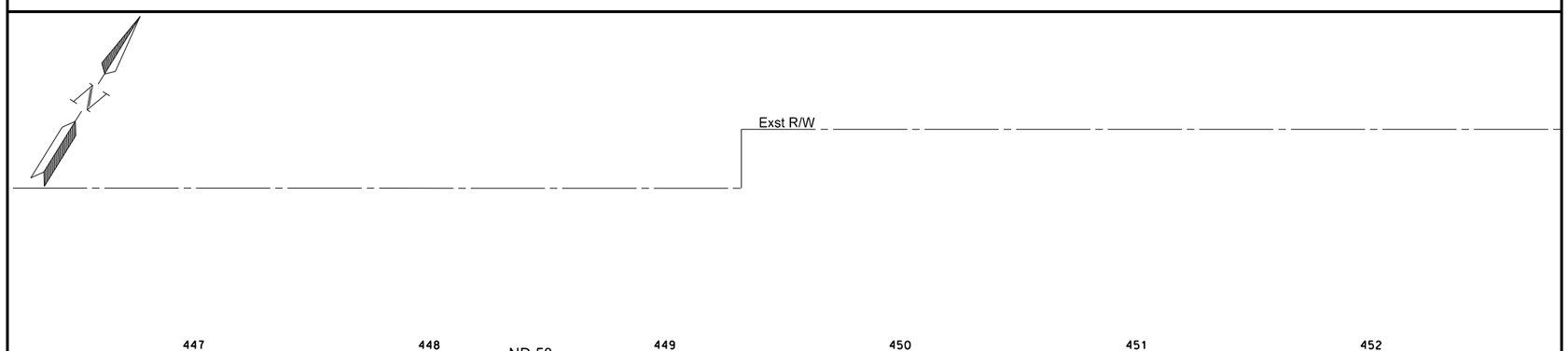

Point	North	East	Station	Offset
9454	378080.2410	1107202.4862	443+23.00	18.00
9455	378110.8565	1107183.5470	443+23.00	-18.00

This document was originally issued and sealed by William Doerr, Registration Number PE- 7113, on 12/04/15 and the original document is stored at the North Dakota Department of Transportation

Survey Data Points

ND 58

Jct 200 to Jct 1804

STATE	PROJECT NO.	SECTION NO.	SHEET NO.
ND	SOIB-7-058(013)000	82	38

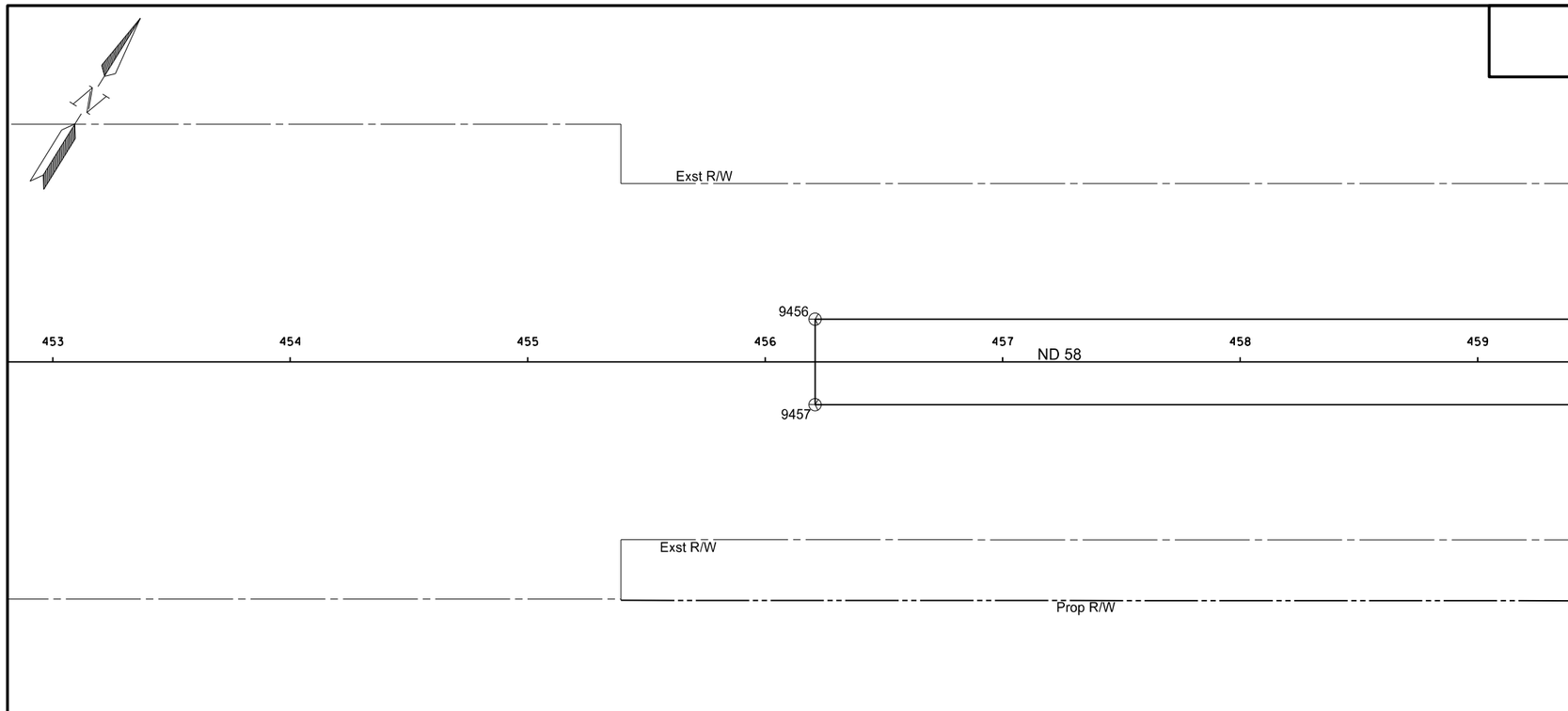

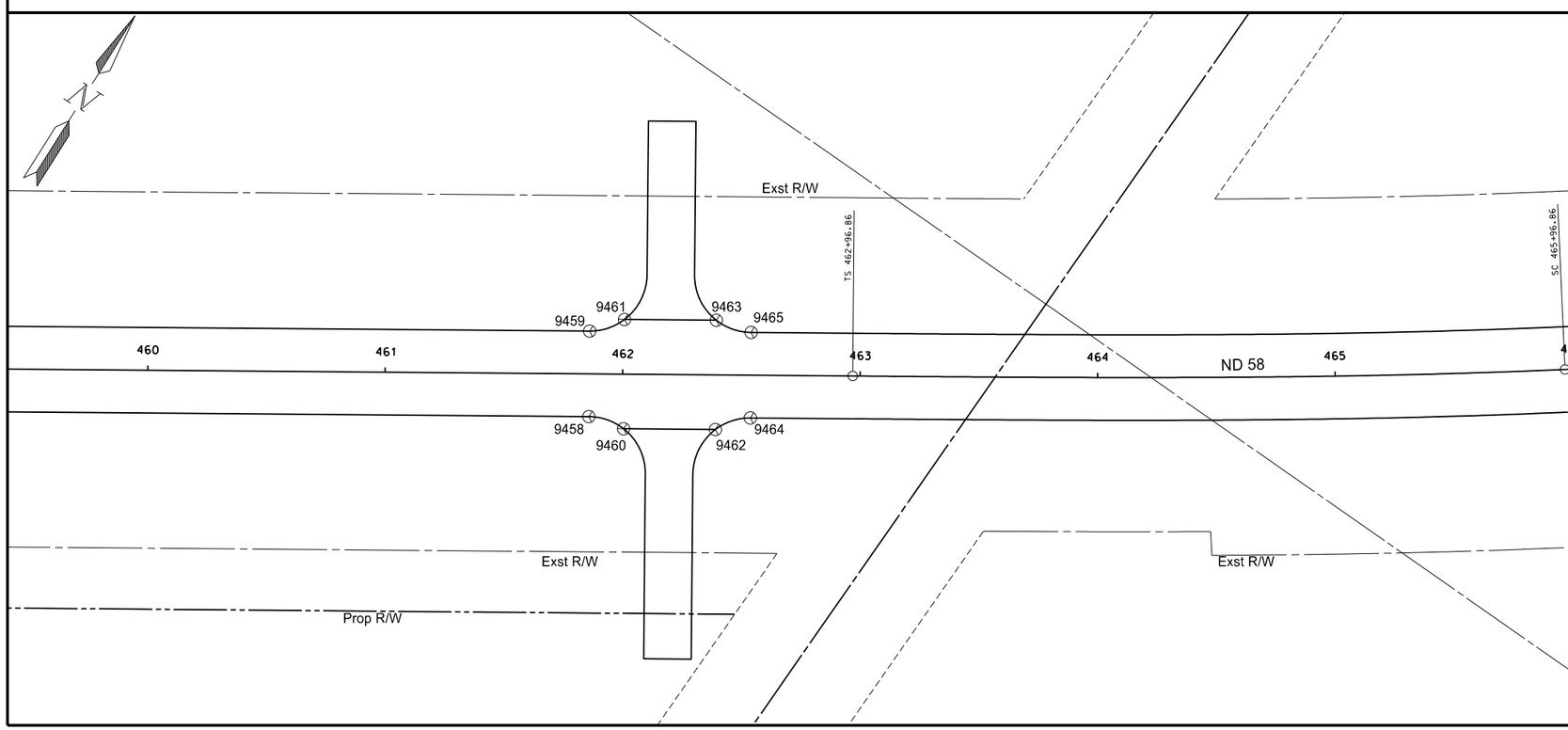

Point	North	East	Station	Offset
9456	378793.7187	1108287.4053	456+21.00	-18.00
9457	378763.1032	1108306.3445	456+21.00	18.00
9458	379060.2884	1108786.7493	461+85.90	18.00
9459	379090.9184	1108767.8336	461+85.92	-18.00
9460	379063.7503	1108801.8487	462+00.56	23.00
9461	379102.8850	1108777.6731	462+00.59	-23.00
9462	379084.0946	1108834.7387	462+39.23	23.00
9463	379123.2303	1108810.5647	462+39.26	-23.00
9464	379096.0624	1108844.5786	462+53.90	18.00
9465	379126.6924	1108825.6629	462+53.92	-18.00

This document was originally issued and sealed by William Doerr, Registration Number PE- 7113, on 12/04/15 and the original document is stored at the North Dakota Department of Transportation

Survey Data Points

ND 58

Jct 200 to Jct 1804

STATE	PROJECT NO.	SECTION NO.	SHEET NO.
ND	SOIB-7-058(013)000	82	39

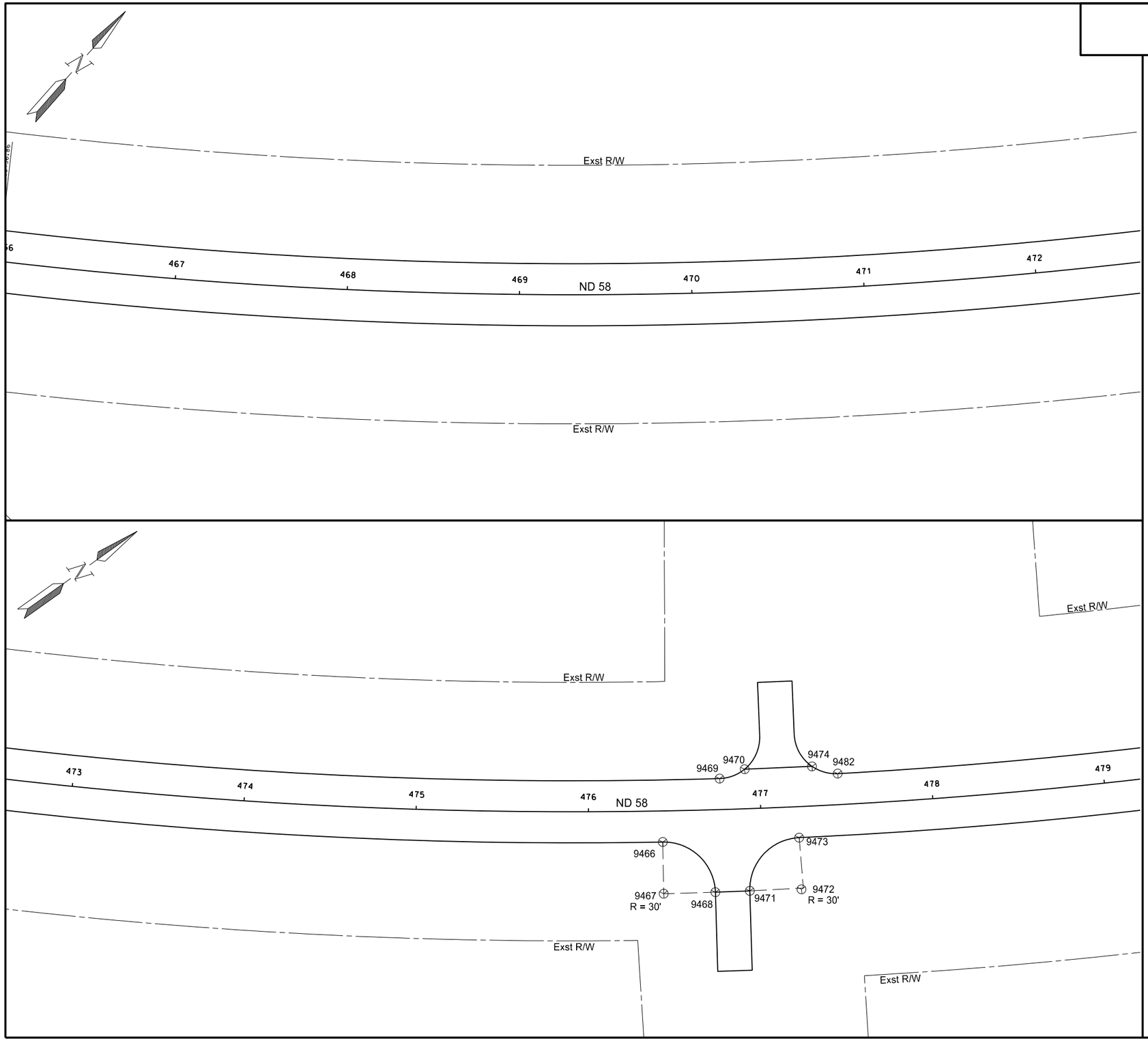

Point	North	East	Station	Offset
9466	380024.1228	1109871.7240	476+42.80	18.00
9467	380007.1999	1109896.4953	476+42.80	48.00
9468	380032.1640	1109913.1324	476+72.31	47.81
9469	380072.3341	1109860.8205	476+76.68	-18.00
9470	380087.3210	1109864.7857	476+91.47	-22.97
9471	380048.9076	1109924.0741	476+91.98	47.67
9472	380073.8710	1109940.7123	477+21.49	48.00
9473	380090.1073	1109915.4856	477+21.49	18.00
9474	380120.1385	1109886.0780	477+30.90	-22.97
9482	380129.8668	1109898.1428	477+45.69	-18.00

This document was originally issued and sealed by William Doerr, Registration Number PE- 7113, on 12/04/15 and the original document is stored at the North Dakota Department of Transportation

Survey Data Points

ND 58

Jct 200 to Jct 1804

STATE	PROJECT NO.	SECTION NO.	SHEET NO.
ND	SOIB-7-058(013)000	82	40

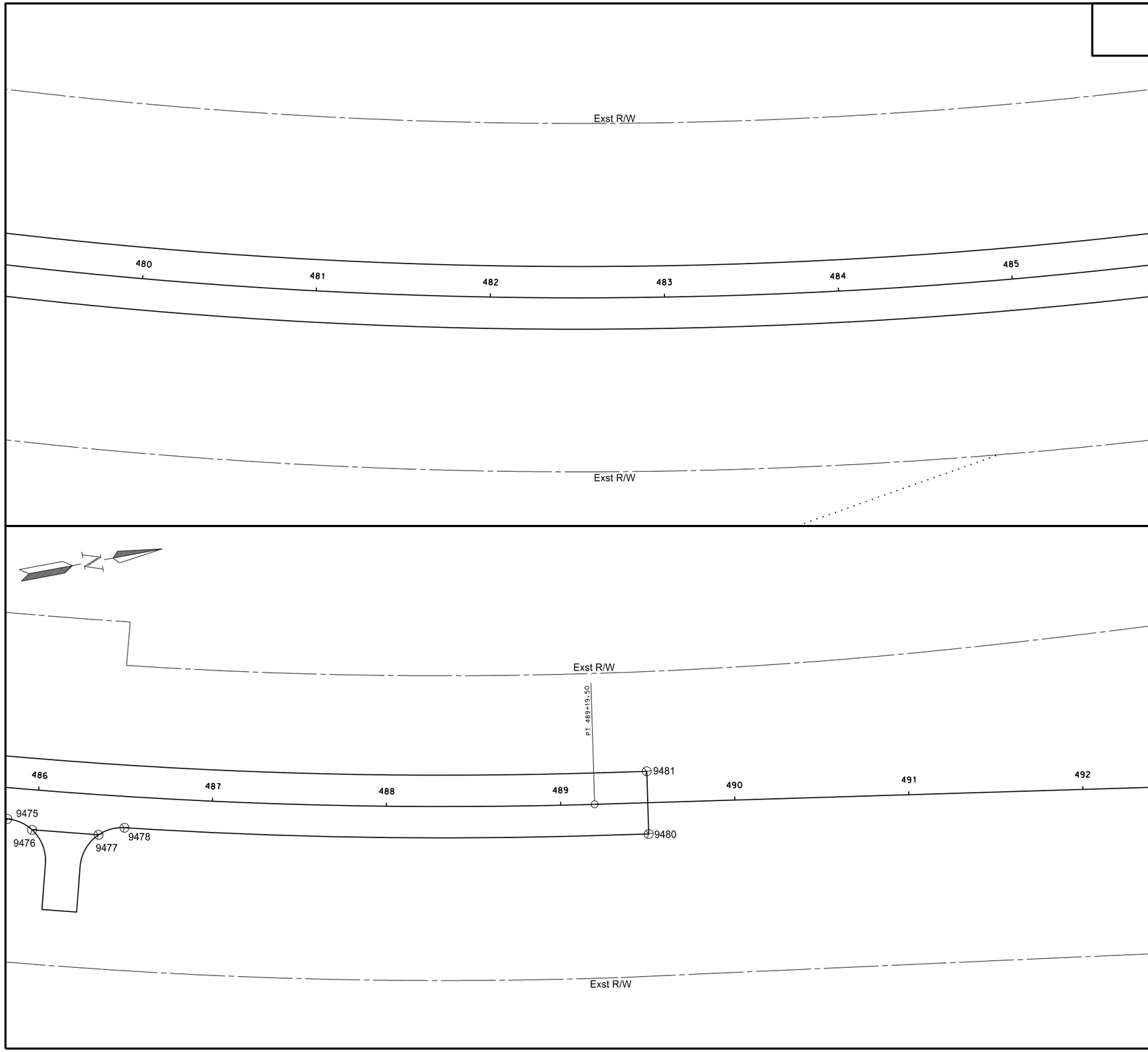

Point	North	East	Station	Offset
9475	380129.8668	1109898.1428	477+45.69	-18.00
9476	380878.7335	1110268.9990	485+83.58	18.00
9477	380891.5106	1110277.7241	485+98.11	23.02
9478	380928.5016	1110287.5315	486+36.07	23.02
9479	380943.9185	1110286.2873	486+50.60	18.00
9480	381239.1264	1110344.8595	489+50.00	18.00
9481	381244.6374	1110309.2838	489+50.00	-18.00

This document was originally issued and sealed by William Doerr, Registration Number PE- 7113, on 12/04/15 and the original document is stored at the North Dakota Department of Transportation

Survey Data Points

ND 58

Jct 200 to Jct 1804

STATE	PROJECT NO.	SECTION NO.	SHEET NO.
ND	SOIB-7-058(013)000	90	1

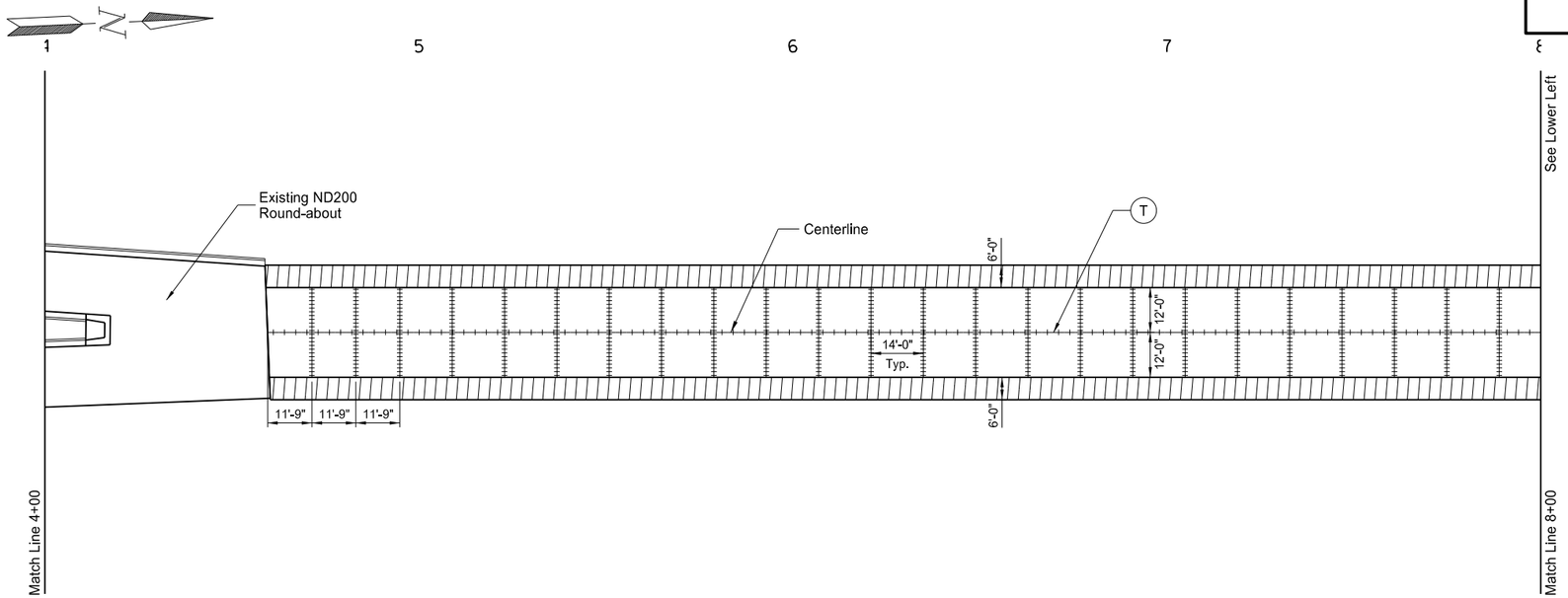

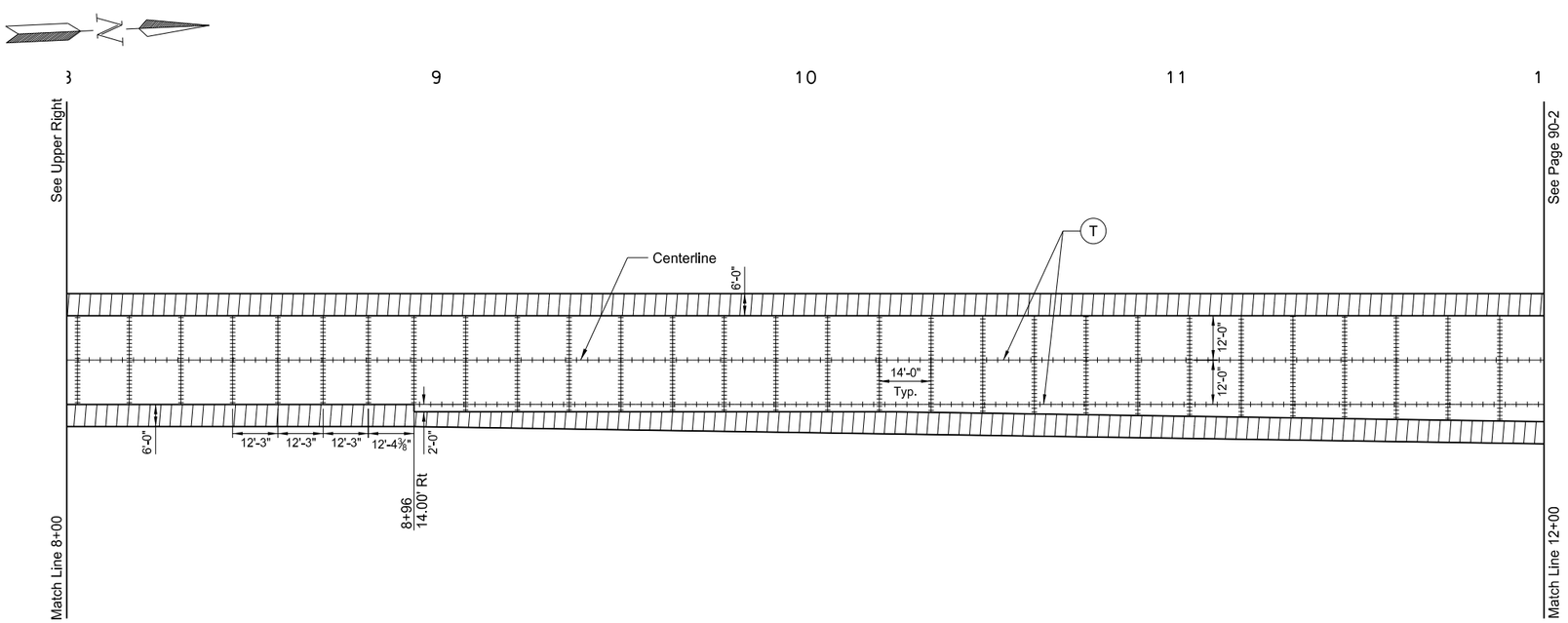

(T) Tied Joint with Hot Pour Seal - See Detail

(S) Sawed Longitudinal Joint

Doweled Joint - @ Transverse Joint Spacing (Continuous)

This document was originally issued and sealed by William Doerr, Registration Number PE- 7113, on 12/04/05 and the original document is stored at the North Dakota Department of Transportation

Paving Joint Layouts

ND 58

Jct 200 to Jct 1804

STATE	PROJECT NO.	SECTION NO.	SHEET NO.
ND	SOIB-7-058(013)000	90	2

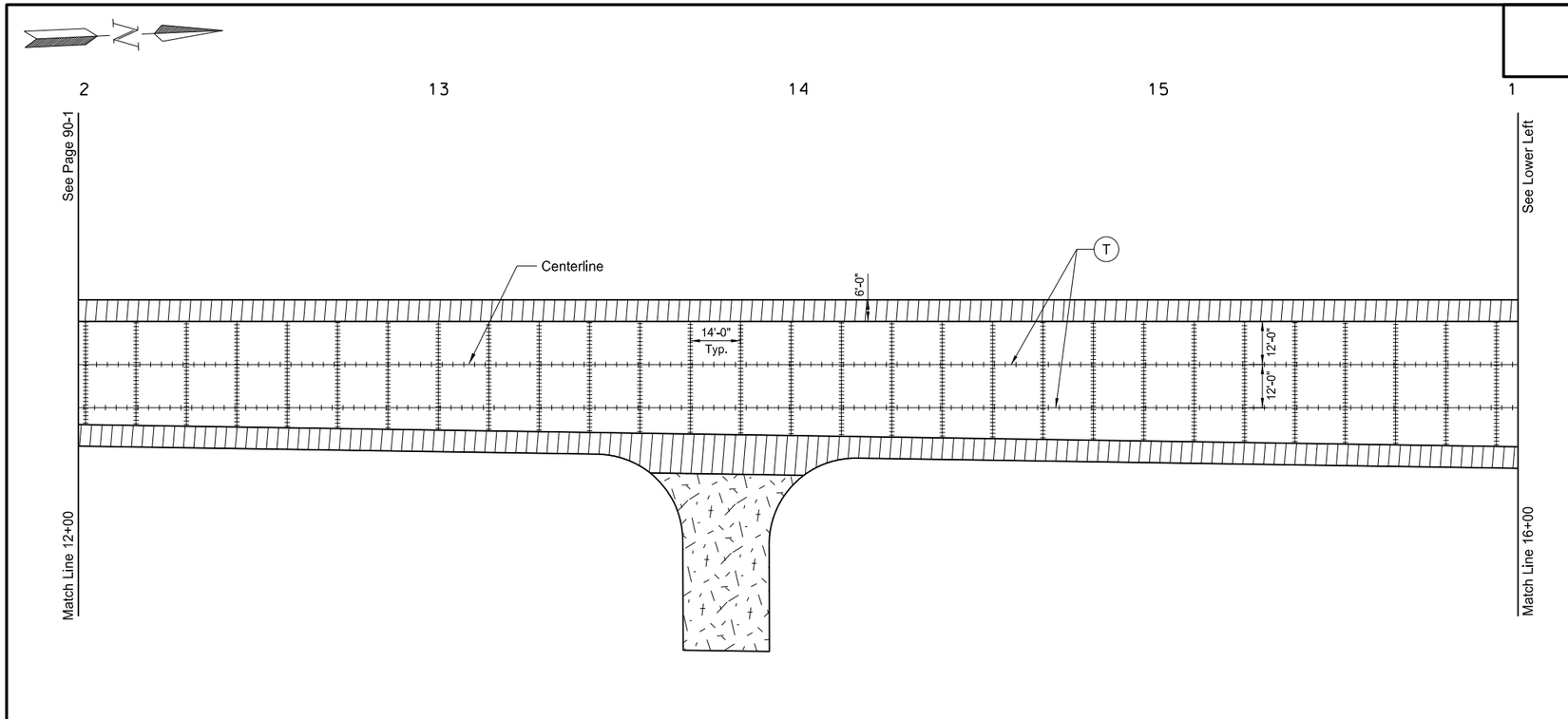

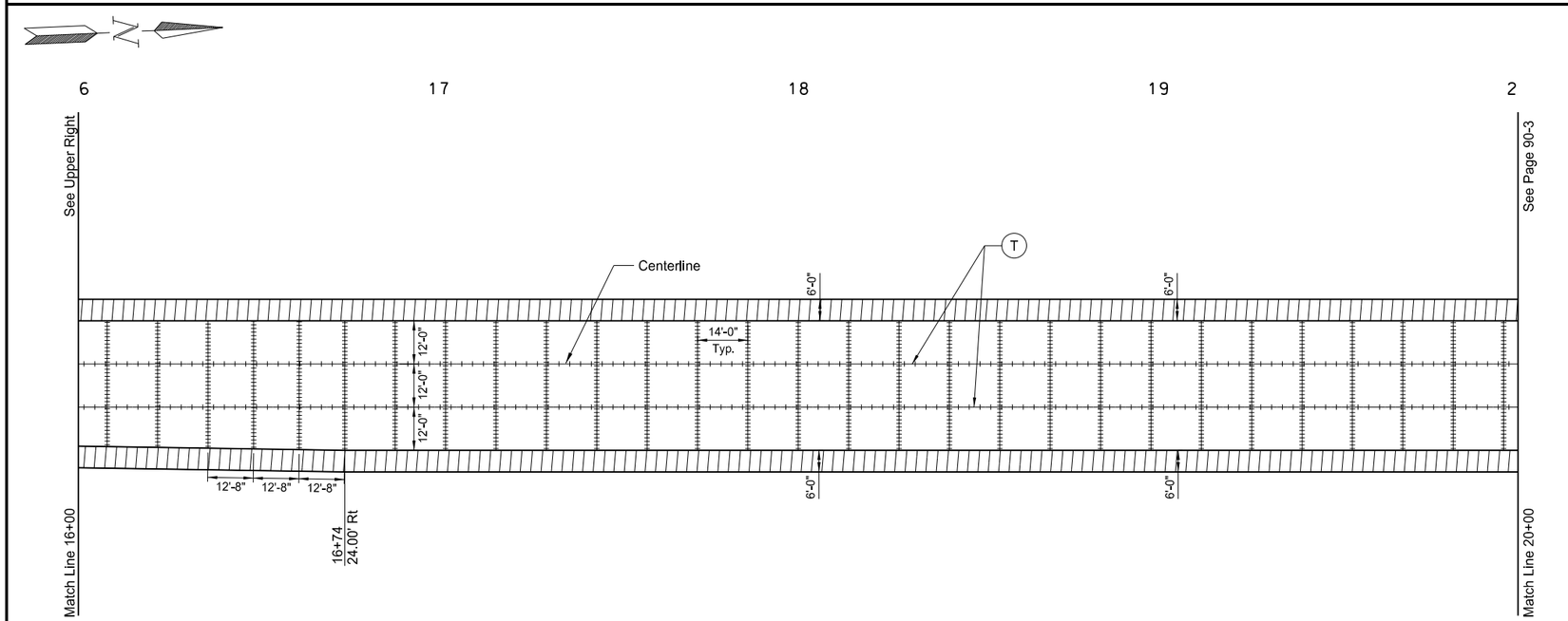

(T) Tied Joint with Hot Pour Seal - See Detail

(S) Sawed Longitudinal Joint

Doweled Joint - Placed in driving lanes only @ Transverse Joint Spacing (Continuous)

This document was originally issued and sealed by William Doerr, Registration Number PE- 7113, on 12/04/05 and the original document is stored at the North Dakota Department of Transportation

Paving Joint Layouts

ND 58

Jct 200 to Jct 1804

STATE	PROJECT NO.	SECTION NO.	SHEET NO.
ND	SOIB-7-058(013)000	90	3

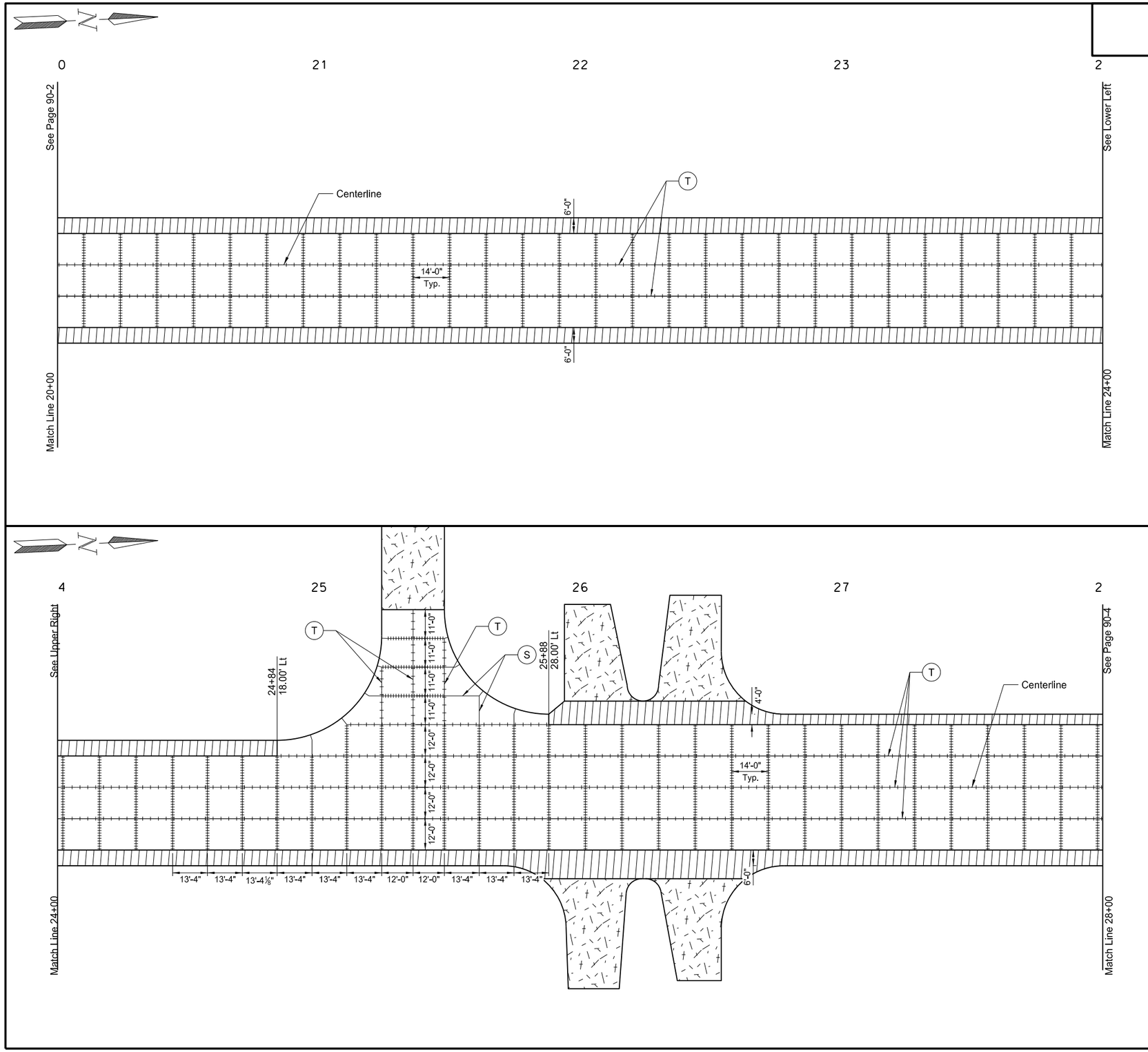

T Tied Joint with Hot Pour Seal - See Detail

S Sawed Longitudinal Joint

Doweled Joint - Placed in driving lanes only @ Transverse Joint Spacing (Continuous)

This document was originally issued and sealed by William Doerr, Registration Number PE- 7113, on 12/04/05 and the original document is stored at the North Dakota Department of Transportation

Paving Joint Layouts

ND 58

Jct 200 to Jct 1804

STATE	PROJECT NO.	SECTION NO.	SHEET NO.
ND	SOIB-7-058(013)000	90	4

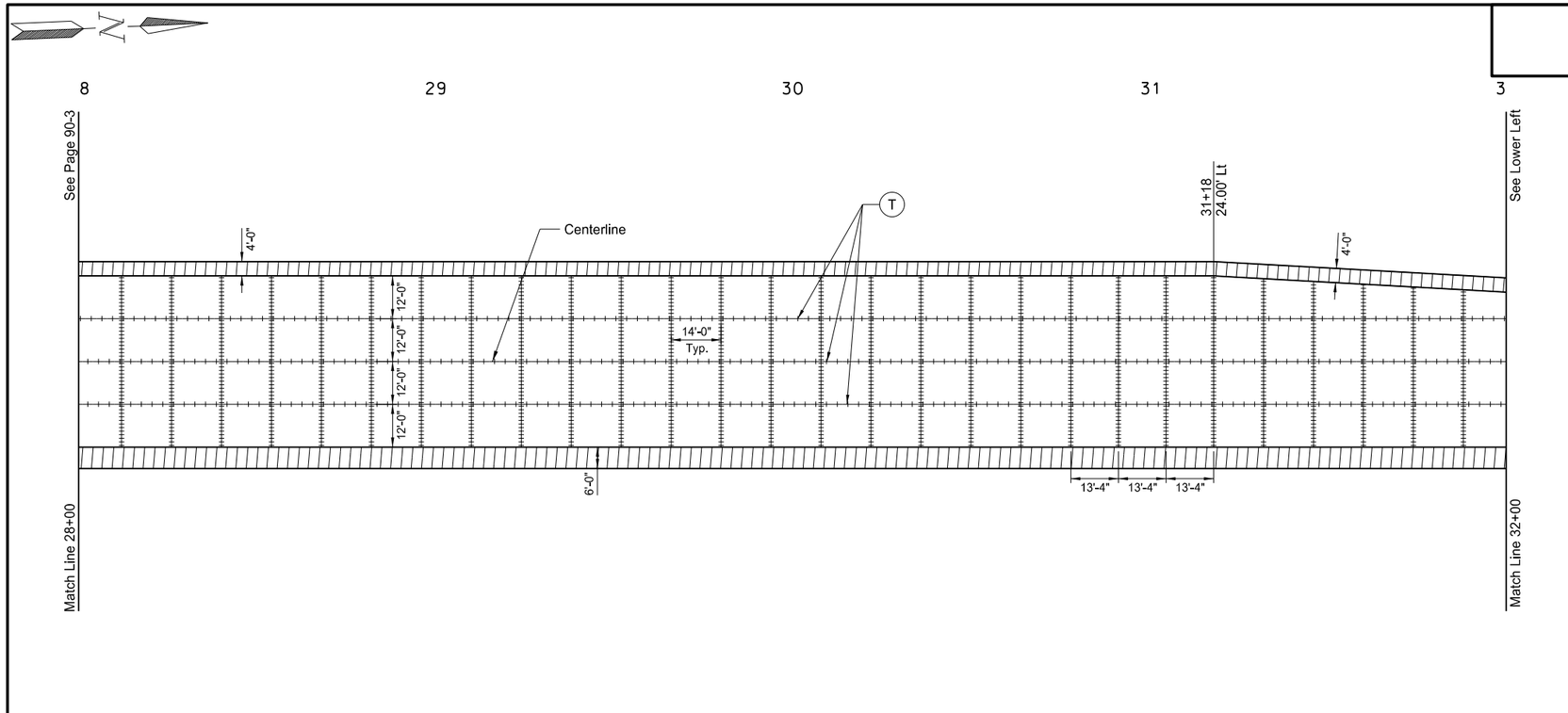

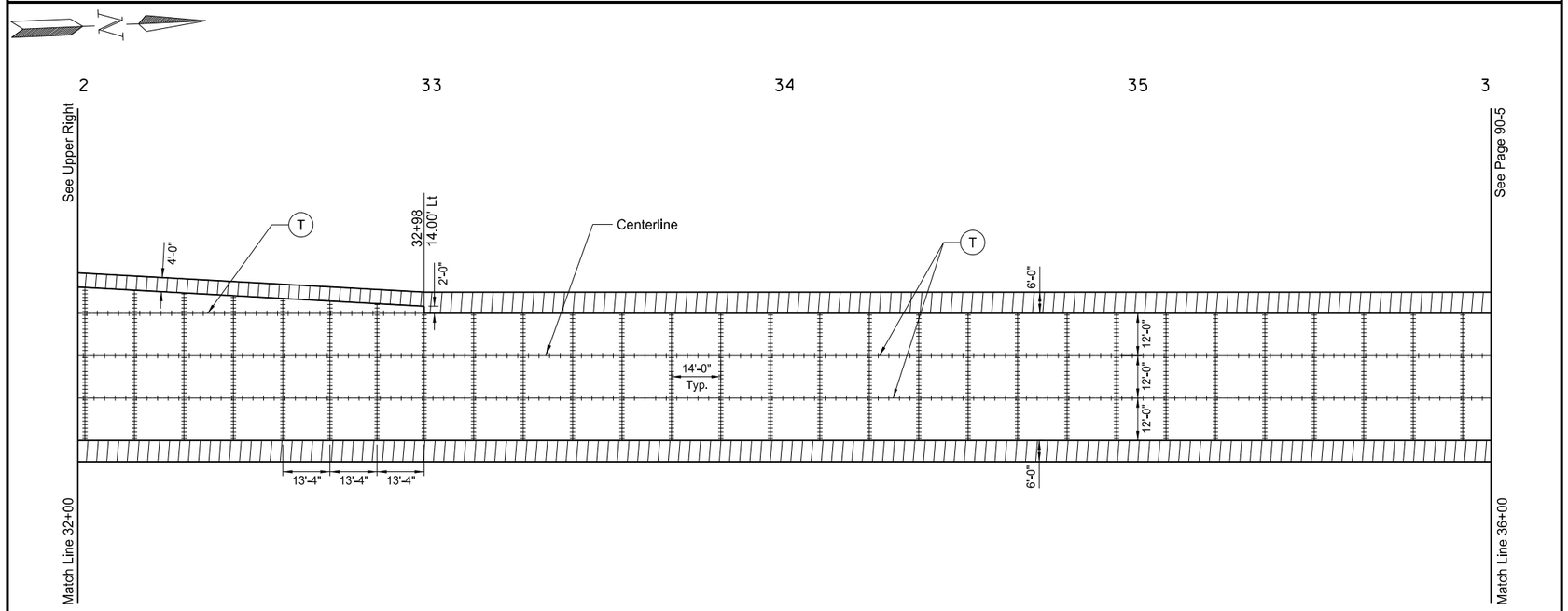

T Tied Joint with Hot Pour Seal - See Detail

S Sawed Longitudinal Joint

Doweled Joint - Placed in driving lanes only @ Transverse Joint Spacing (Continuous)

This document was originally issued and sealed by William Doerr, Registration Number PE- 7113, on 12/04/05 and the original document is stored at the North Dakota Department of Transportation

Paving Joint Layouts

ND 58

Jct 200 to Jct 1804

STATE	PROJECT NO.	SECTION NO.	SHEET NO.
ND	SOIB-7-058(013)000	90	5

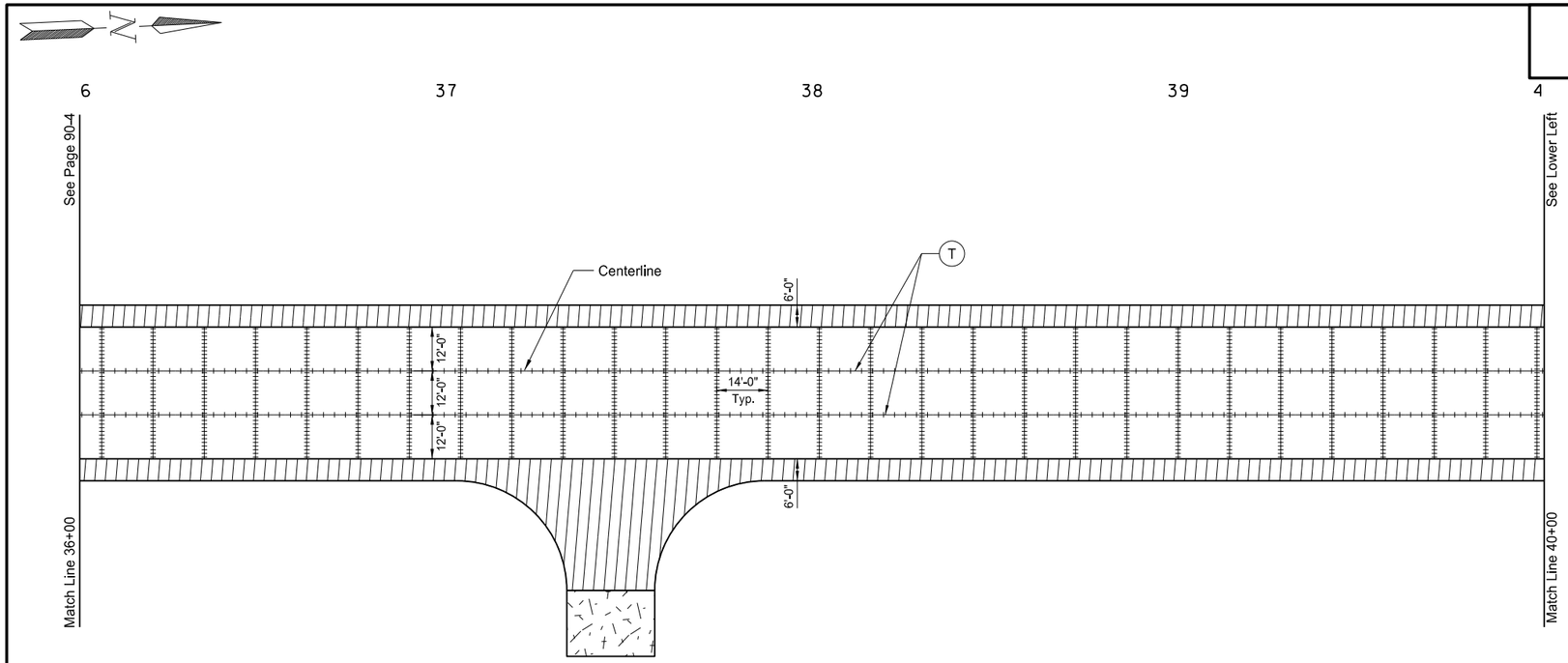

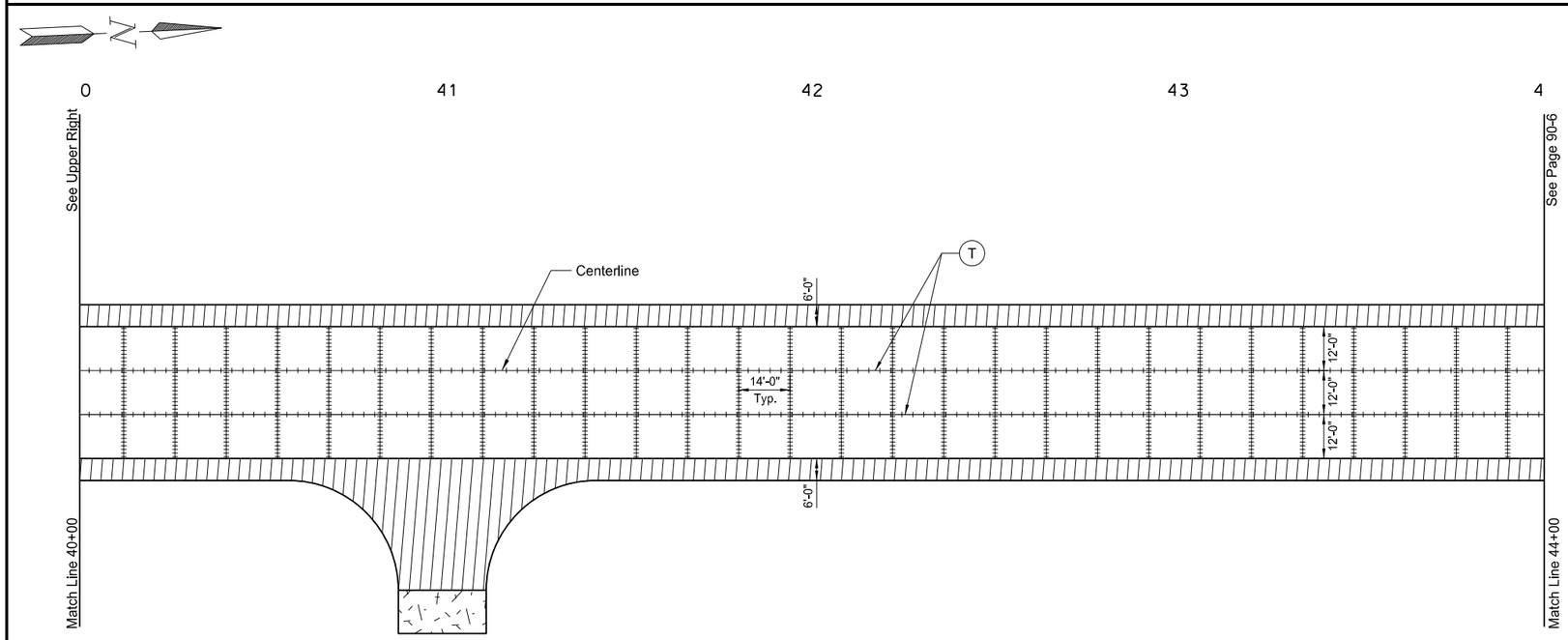

T Tied Joint with Hot Pour Seal - See Detail

S Sawed Longitudinal Joint

Doweled Joint - Placed in driving lanes only @ Transverse Joint Spacing (Continuous)

This document was originally issued and sealed by William Doerr, Registration Number PE- 7113, on 12/04/05 and the original document is stored at the North Dakota Department of Transportation

Paving Joint Layouts

ND 58

Jct 200 to Jct 1804

STATE	PROJECT NO.	SECTION NO.	SHEET NO.
ND	SOIB-7-058(013)000	90	6

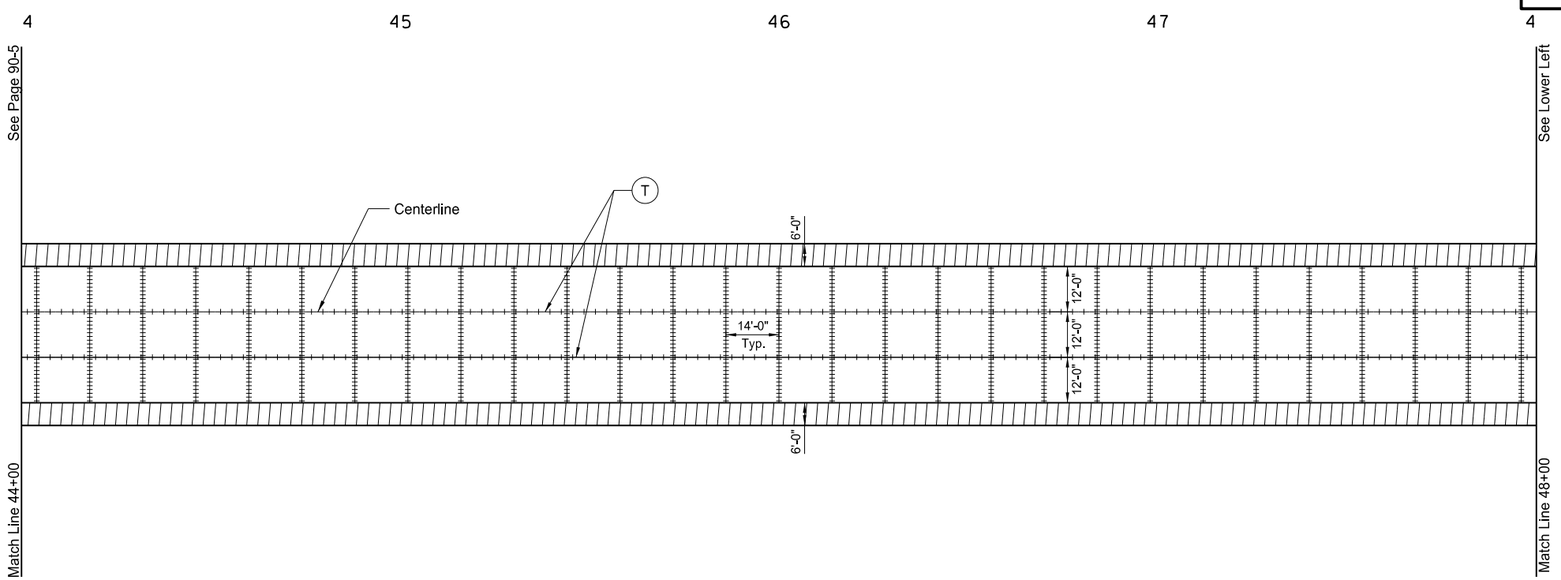

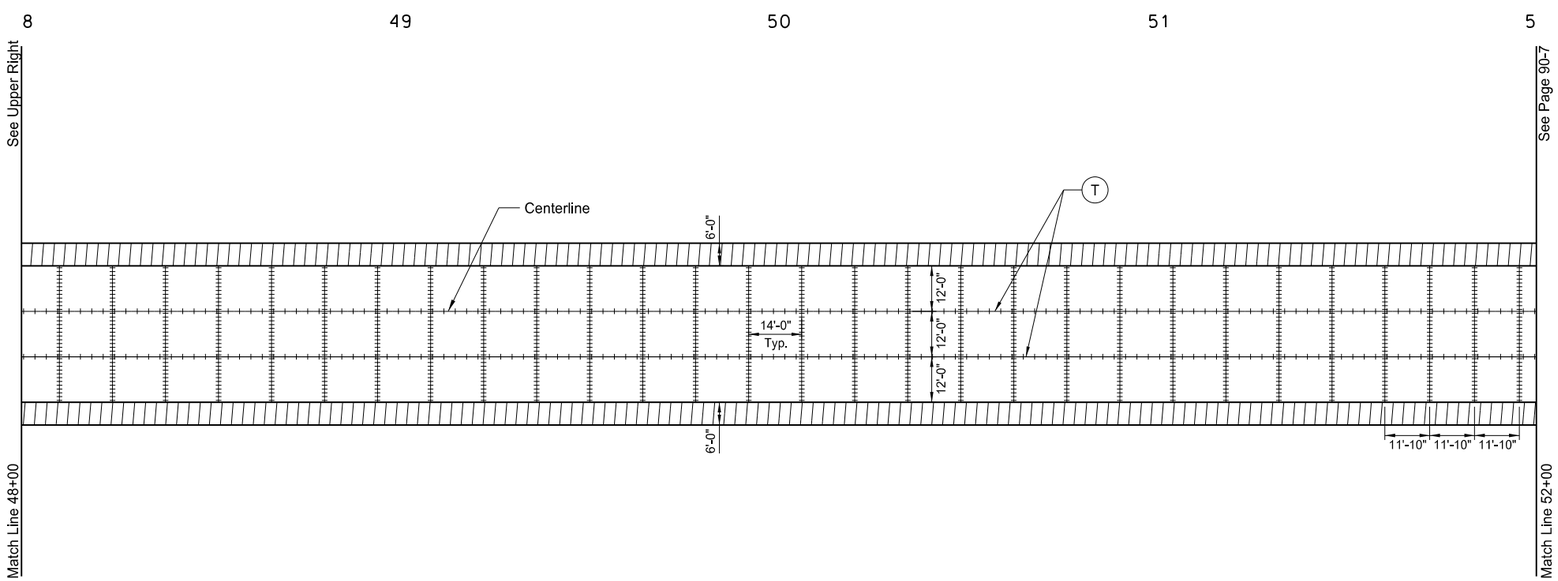

(T) Tied Joint with Hot Pour Seal - See Detail

(S) Sawed Longitudinal Joint

Doweled Joint - Placed in driving lanes only @ Transverse Joint Spacing (Continuous)

This document was originally issued and sealed by William Doerr, Registration Number PE- 7113, on 12/04/05 and the original document is stored at the North Dakota Department of Transportation

Paving Joint Layouts

ND 58

Jct 200 to Jct 1804

STATE	PROJECT NO.	SECTION NO.	SHEET NO.
ND	SOIB-7-058(013)000	90	7

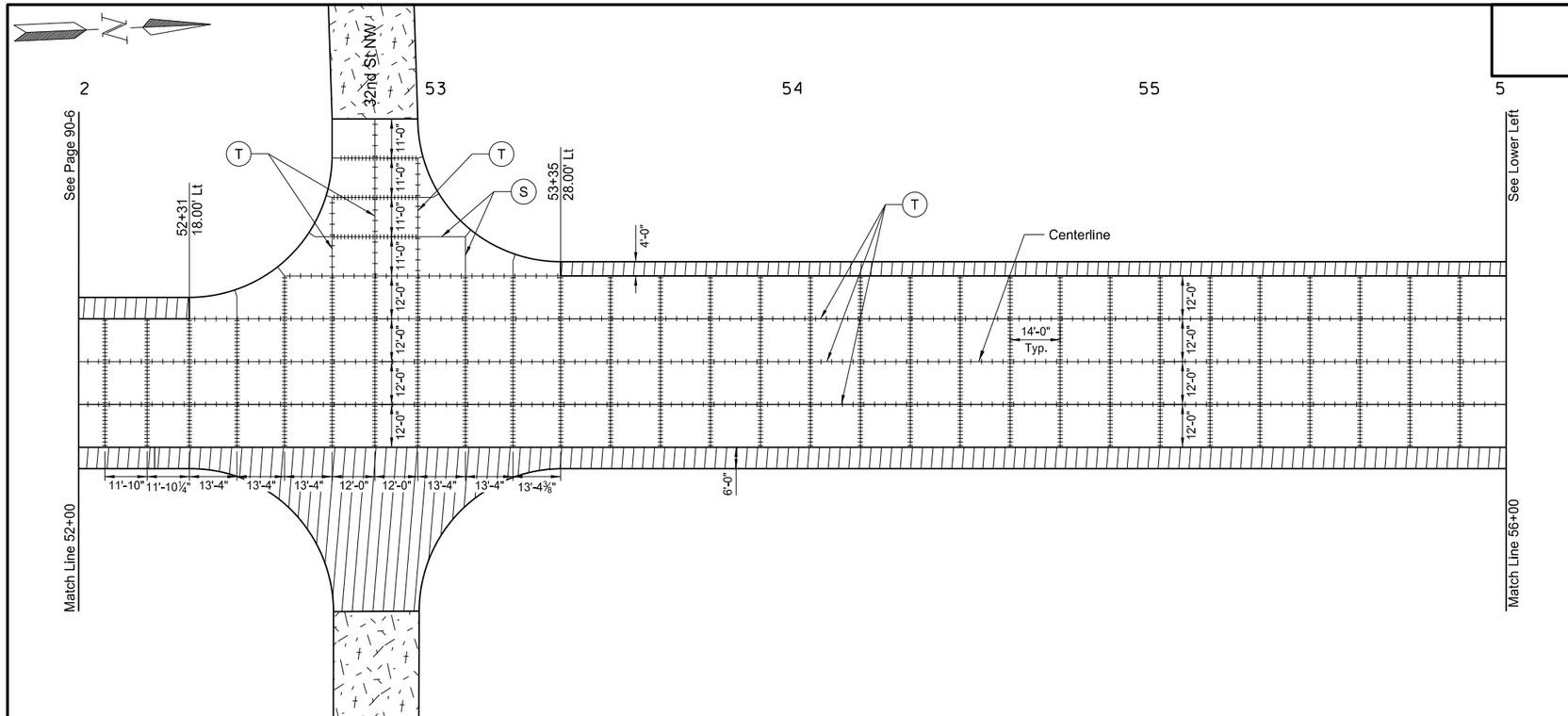

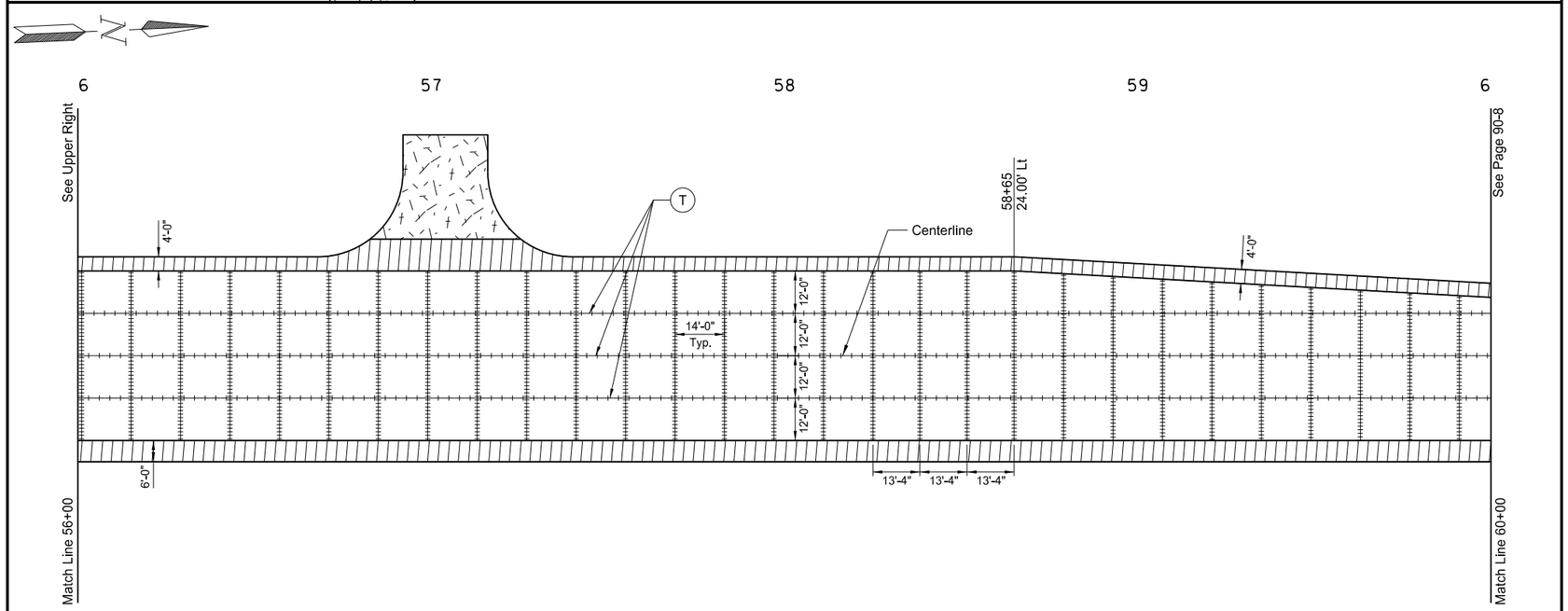

(T) Tied Joint with Hot Pour Seal - See Detail

(S) Sawed Longitudinal Joint

Doweled Joint - Placed in driving lanes only @ Transverse Joint Spacing (Continuous)

This document was originally issued and sealed by William Doerr, Registration Number PE- 7113, on 12/04/05 and the original document is stored at the North Dakota Department of Transportation

Paving Joint Layouts

ND 58

Jct 200 to Jct 1804

STATE	PROJECT NO.	SECTION NO.	SHEET NO.
ND	SOIB-7-058(013)000	90	8

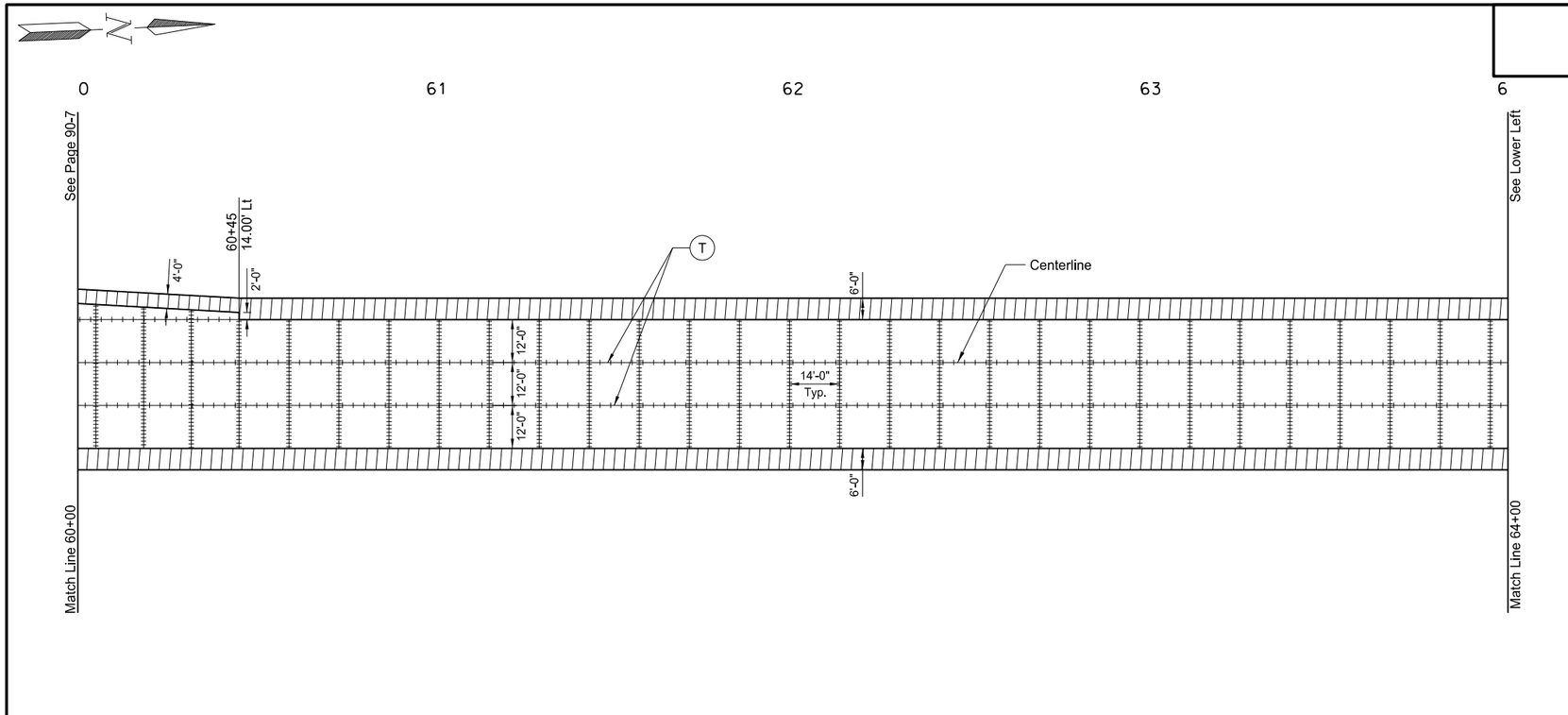

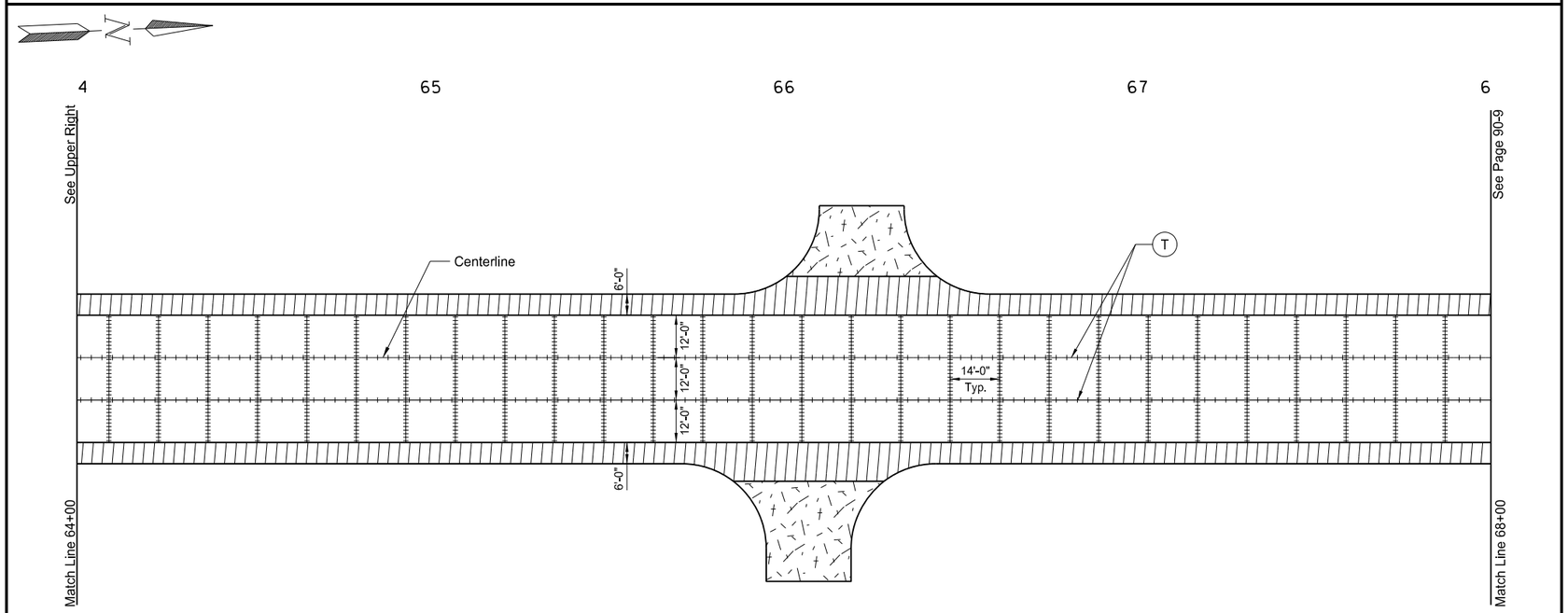

(T) Tied Joint with Hot Pour Seal - See Detail

(S) Sawed Longitudinal Joint

Doweled Joint - Placed in driving lanes only @ Transverse Joint Spacing (Continuous)

This document was originally issued and sealed by William Doerr, Registration Number PE- 7113, on 12/04/05 and the original document is stored at the North Dakota Department of Transportation

Paving Joint Layouts

ND 58

Jct 200 to Jct 1804

STATE	PROJECT NO.	SECTION NO.	SHEET NO.
ND	SOIB-7-058(013)000	90	9

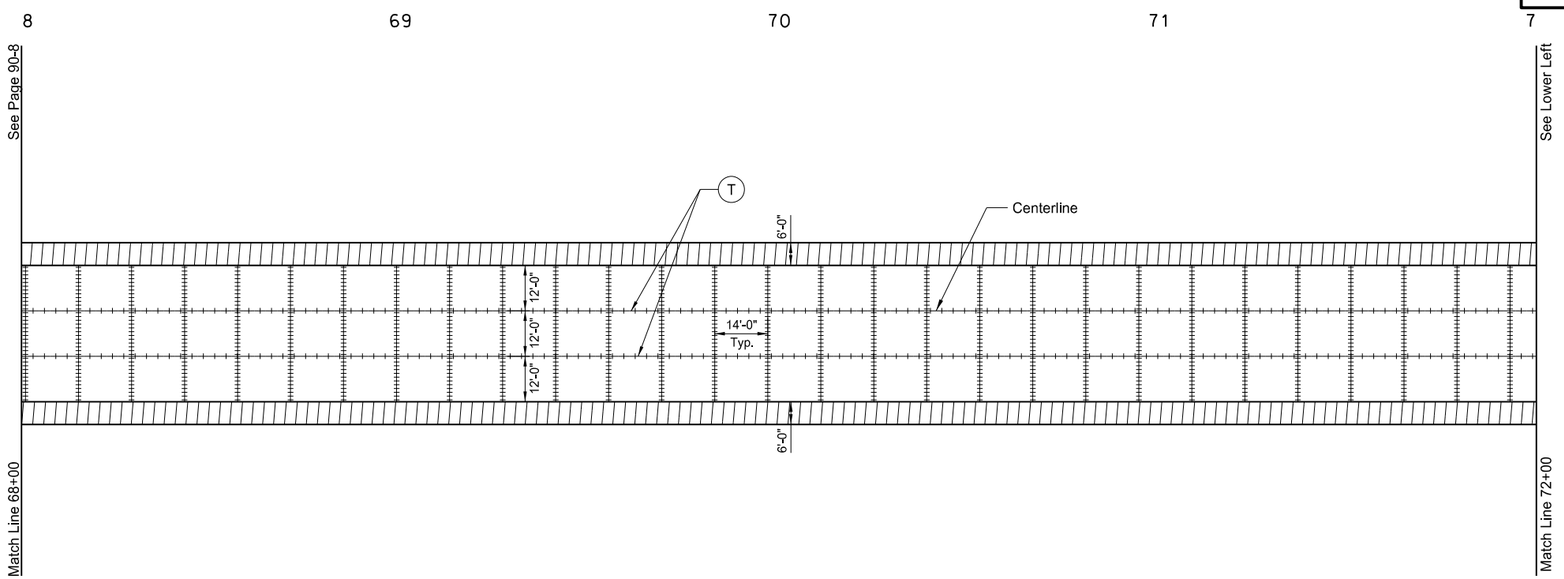

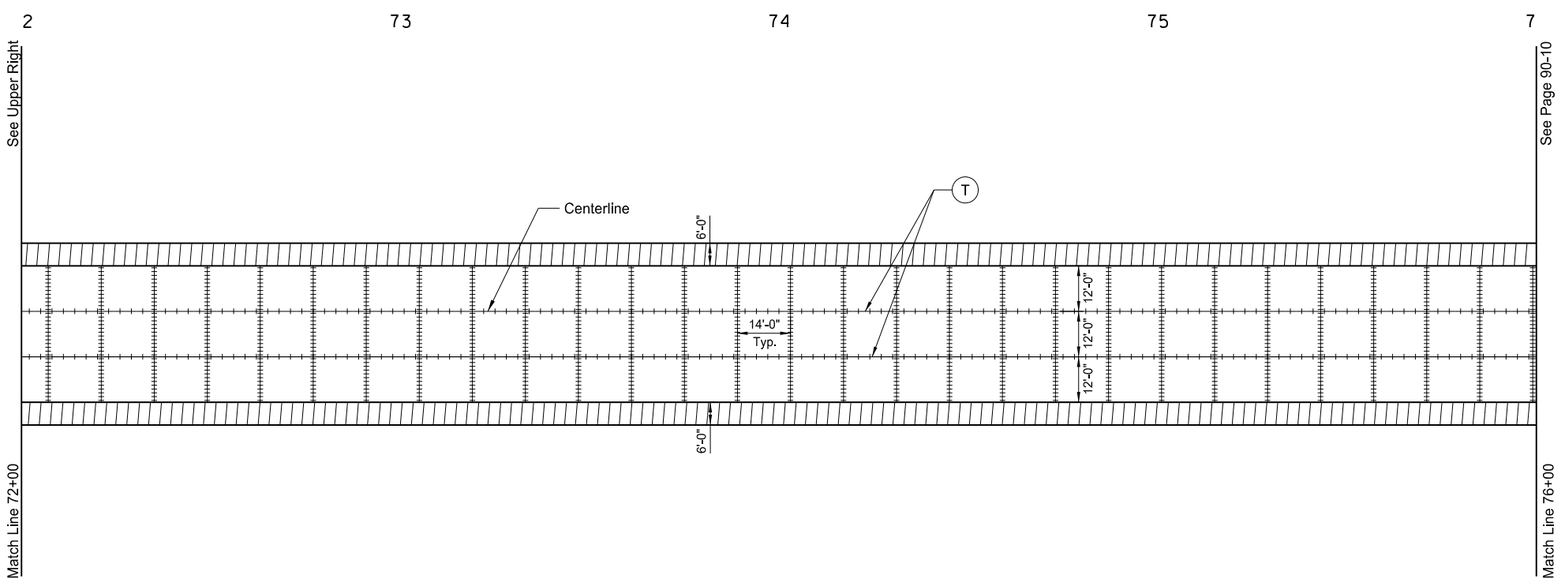

T Tied Joint with Hot Pour Seal - See Detail

S Sawed Longitudinal Joint

Doweled Joint - Placed in driving lanes only @ Transverse Joint Spacing (Continuous)

This document was originally issued and sealed by William Doerr, Registration Number PE- 7113, on 12/04/05 and the original document is stored at the North Dakota Department of Transportation

Paving Joint Layouts

ND 58

Jct 200 to Jct 1804

STATE	PROJECT NO.	SECTION NO.	SHEET NO.
ND	SOIB-7-058(013)000	90	10

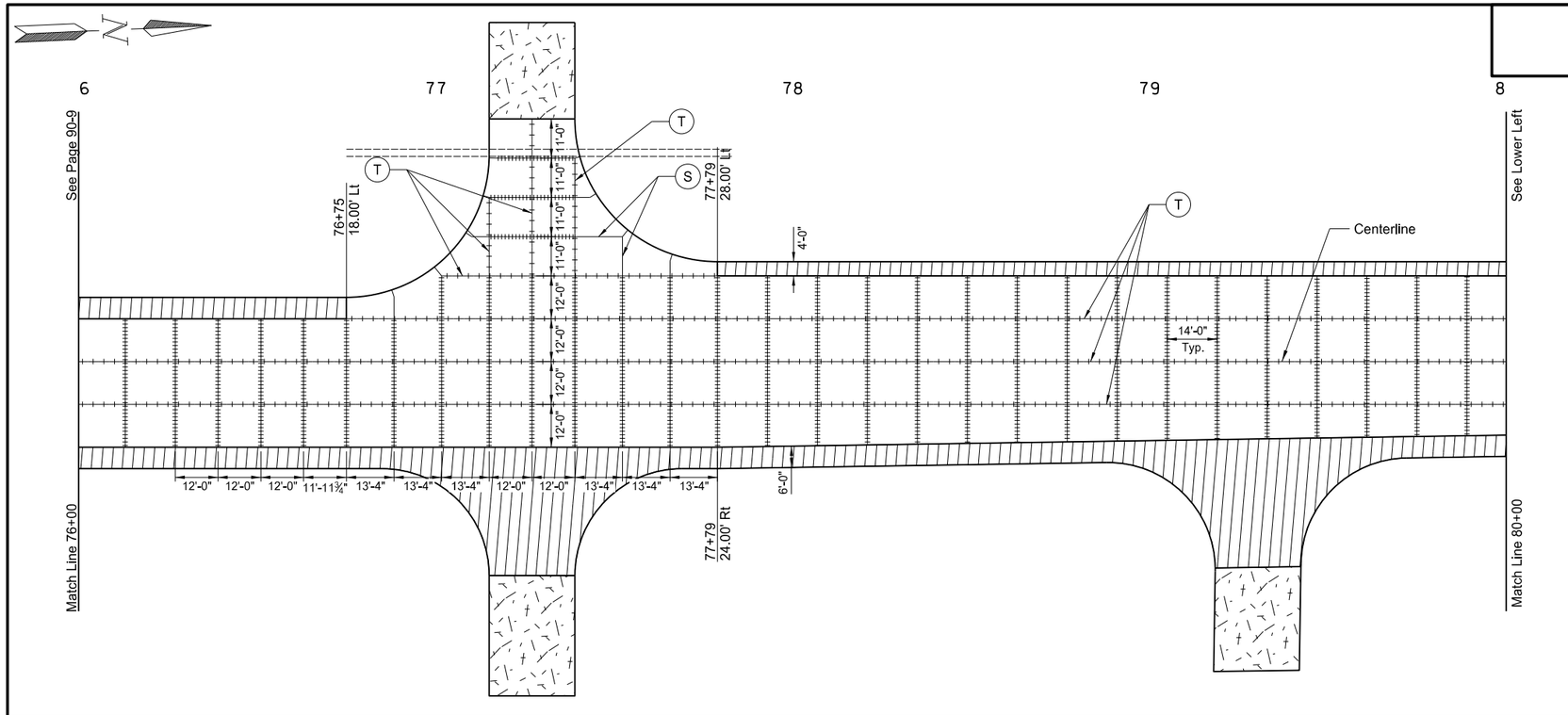

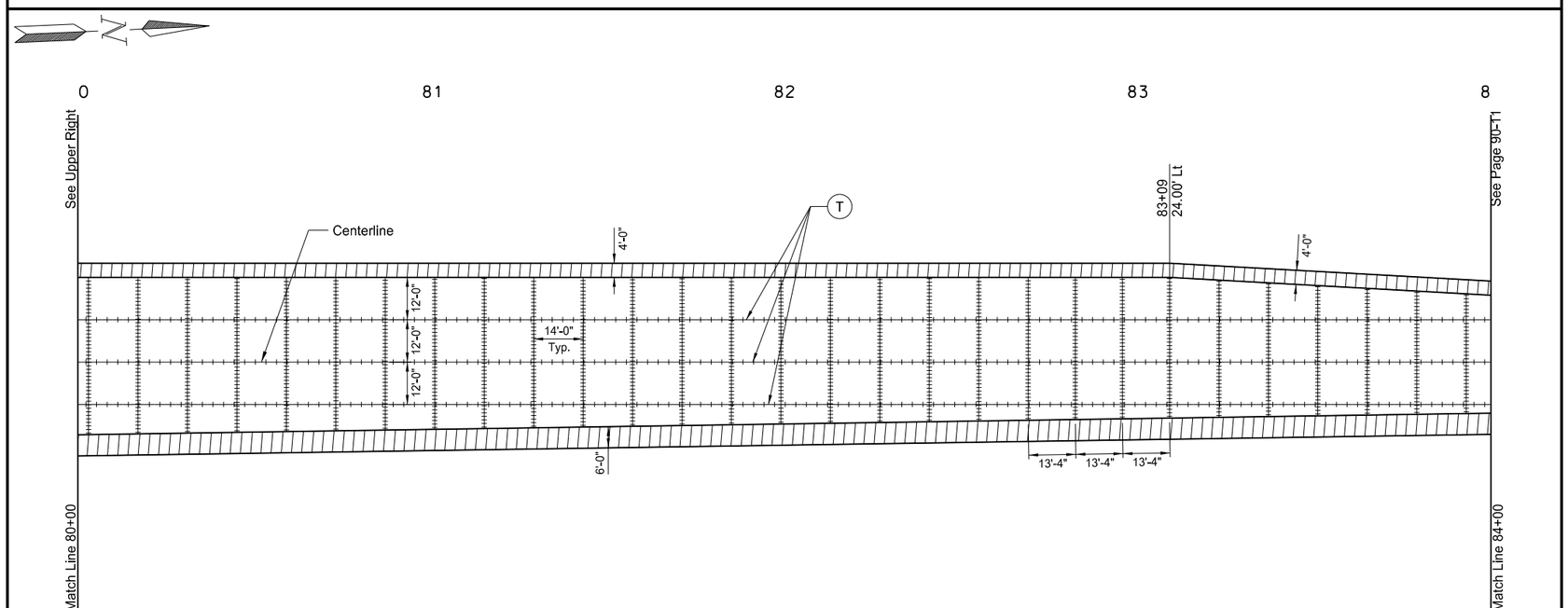

T Tied Joint with Hot Pour Seal - See Detail

S Sawed Longitudinal Joint

Doweled Joint - Placed in driving lanes only @ Transverse Joint Spacing (Continuous)

This document was originally issued and sealed by William Doerr, Registration Number PE- 7113, on 12/04/05 and the original document is stored at the North Dakota Department of Transportation

Paving Joint Layouts

ND 58

Jct 200 to Jct 1804

STATE	PROJECT NO.	SECTION NO.	SHEET NO.
ND	SOIB-7-058(013)000	90	11

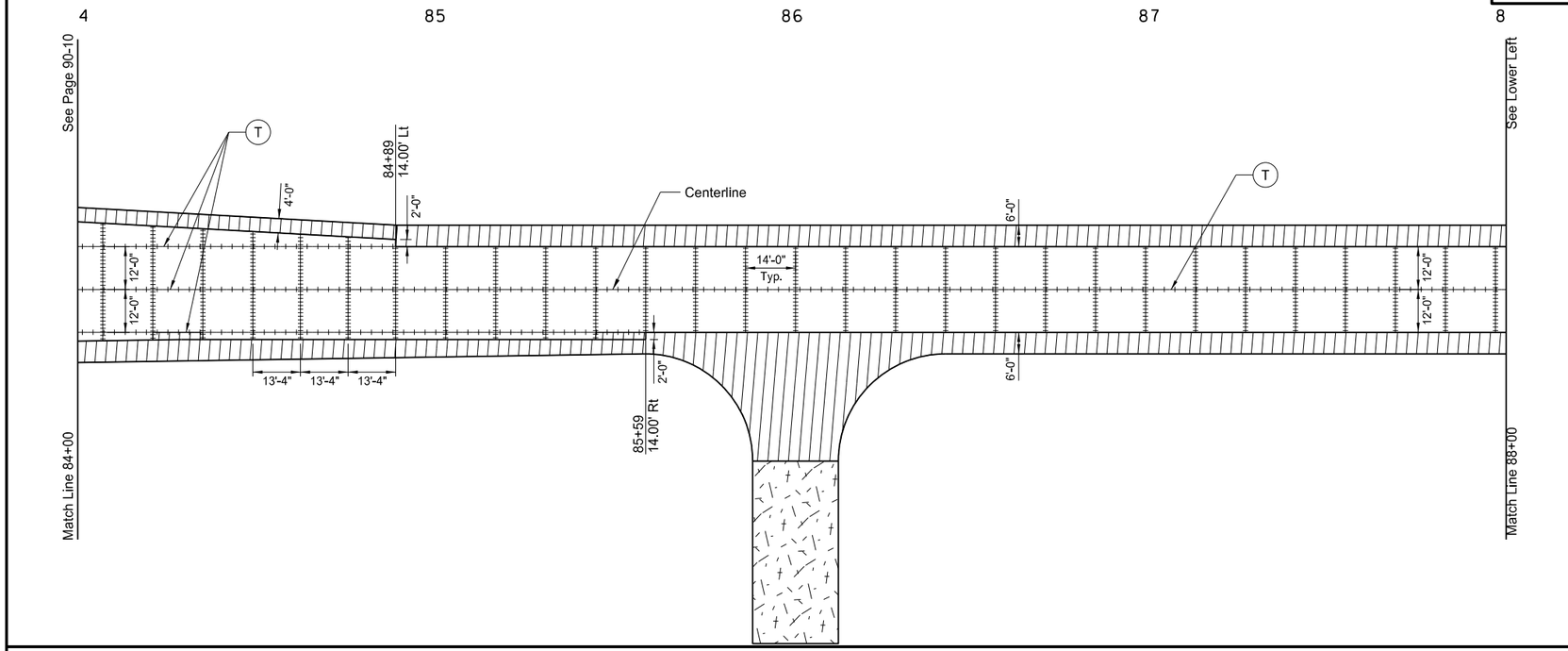

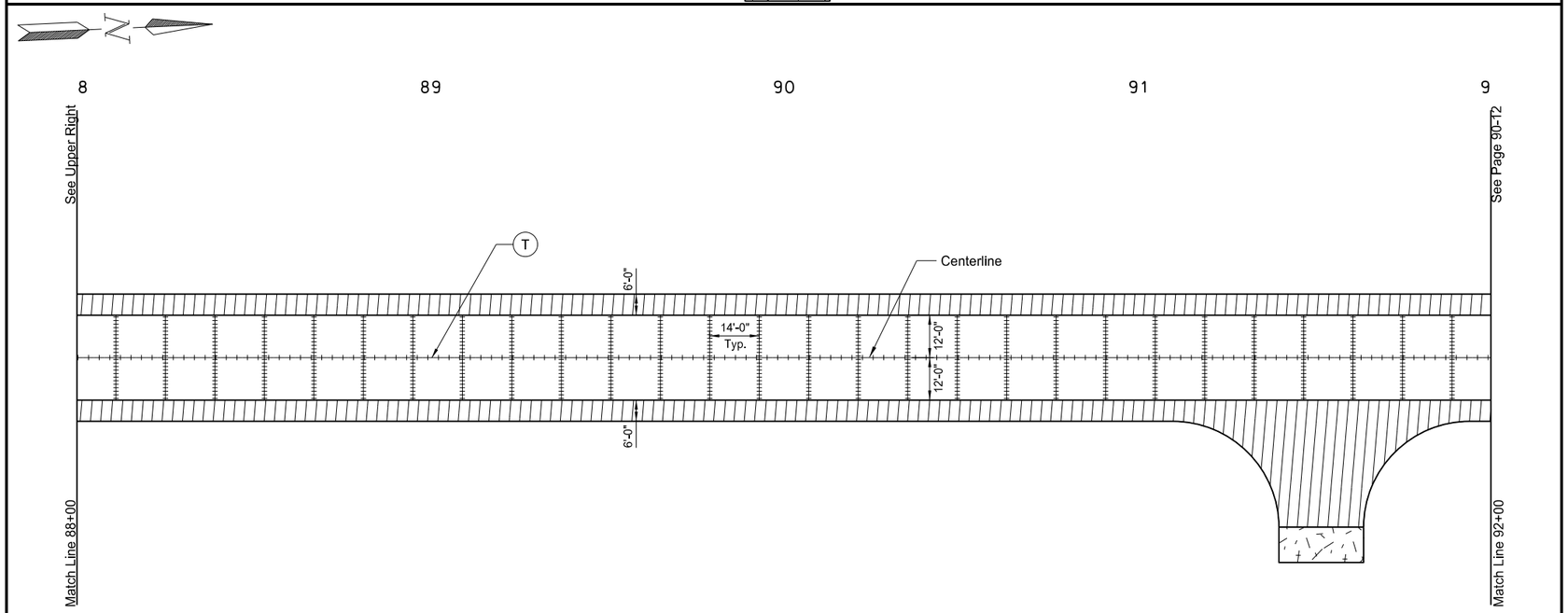

(T) Tied Joint with Hot Pour Seal - See Detail

(S) Sawed Longitudinal Joint

Doweled Joint - Placed in driving lanes only @ Transverse Joint Spacing (Continuous)

This document was originally issued and sealed by William Doerr, Registration Number PE- 7113, on 12/04/05 and the original document is stored at the North Dakota Department of Transportation

Paving Joint Layouts

ND 58

Jct 200 to Jct 1804

STATE	PROJECT NO.	SECTION NO.	SHEET NO.
ND	SOIB-7-058(013)000	90	12

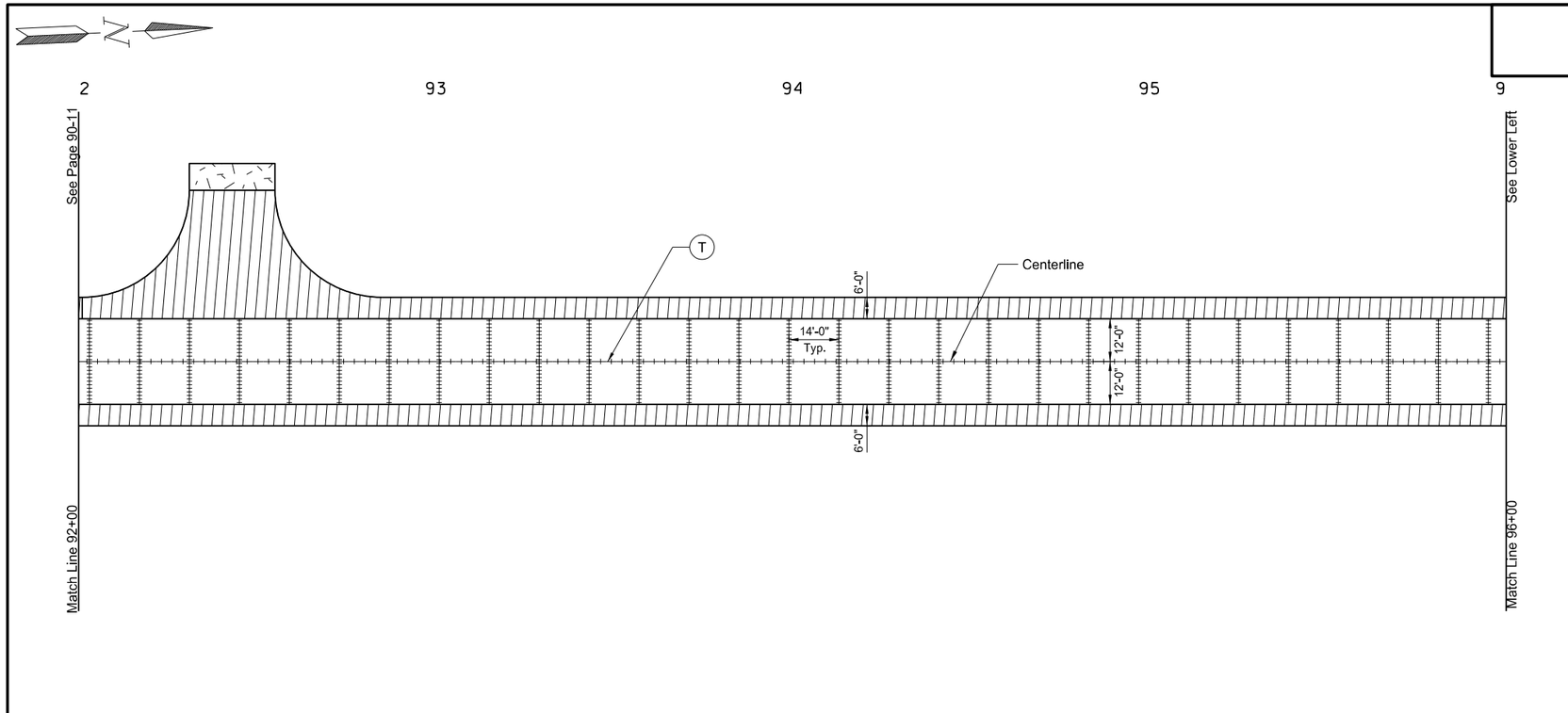

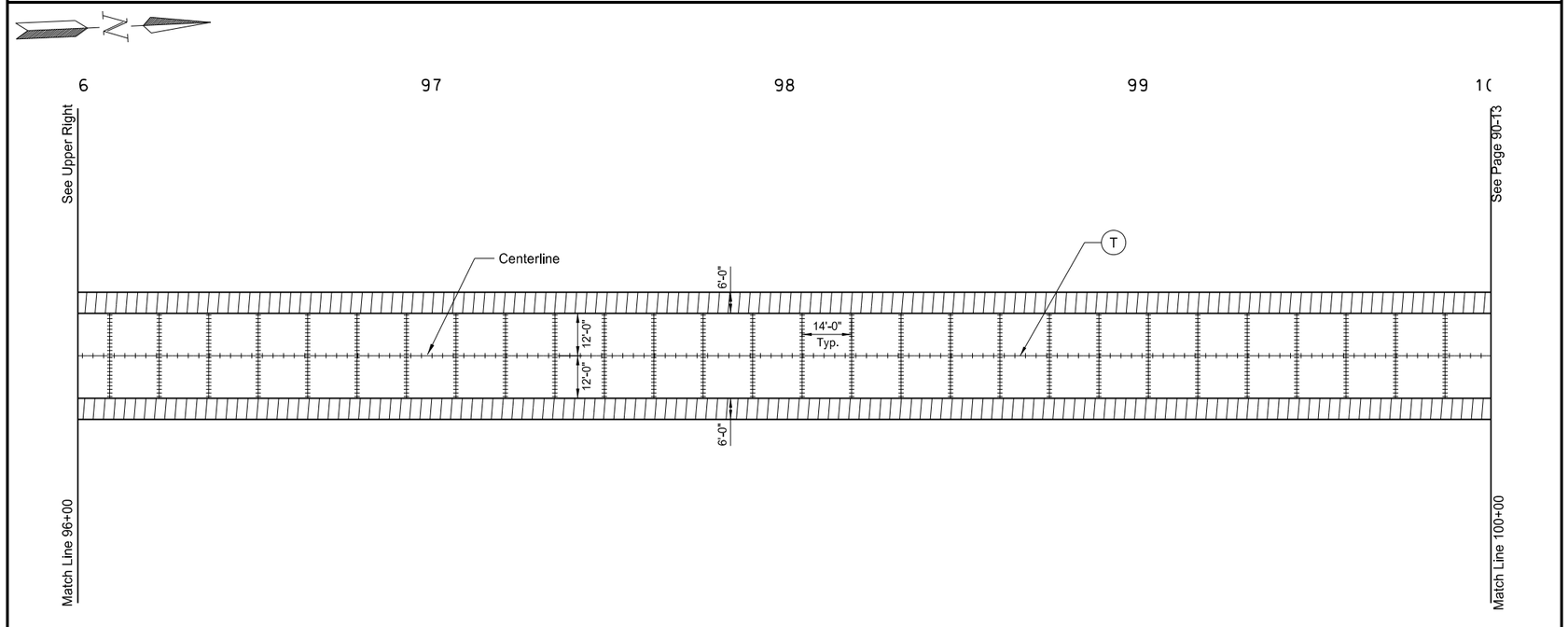

(T) Tied Joint with Hot Pour Seal - See Detail

(S) Sawed Longitudinal Joint

Doweled Joint - Placed in driving lanes only @ Transverse Joint Spacing (Continuous)

This document was originally issued and sealed by William Doerr, Registration Number PE- 7113, on 12/04/05 and the original document is stored at the North Dakota Department of Transportation

Paving Joint Layouts

ND 58

Jct 200 to Jct 1804

STATE	PROJECT NO.	SECTION NO.	SHEET NO.
ND	SOIB-7-058(013)000	90	13

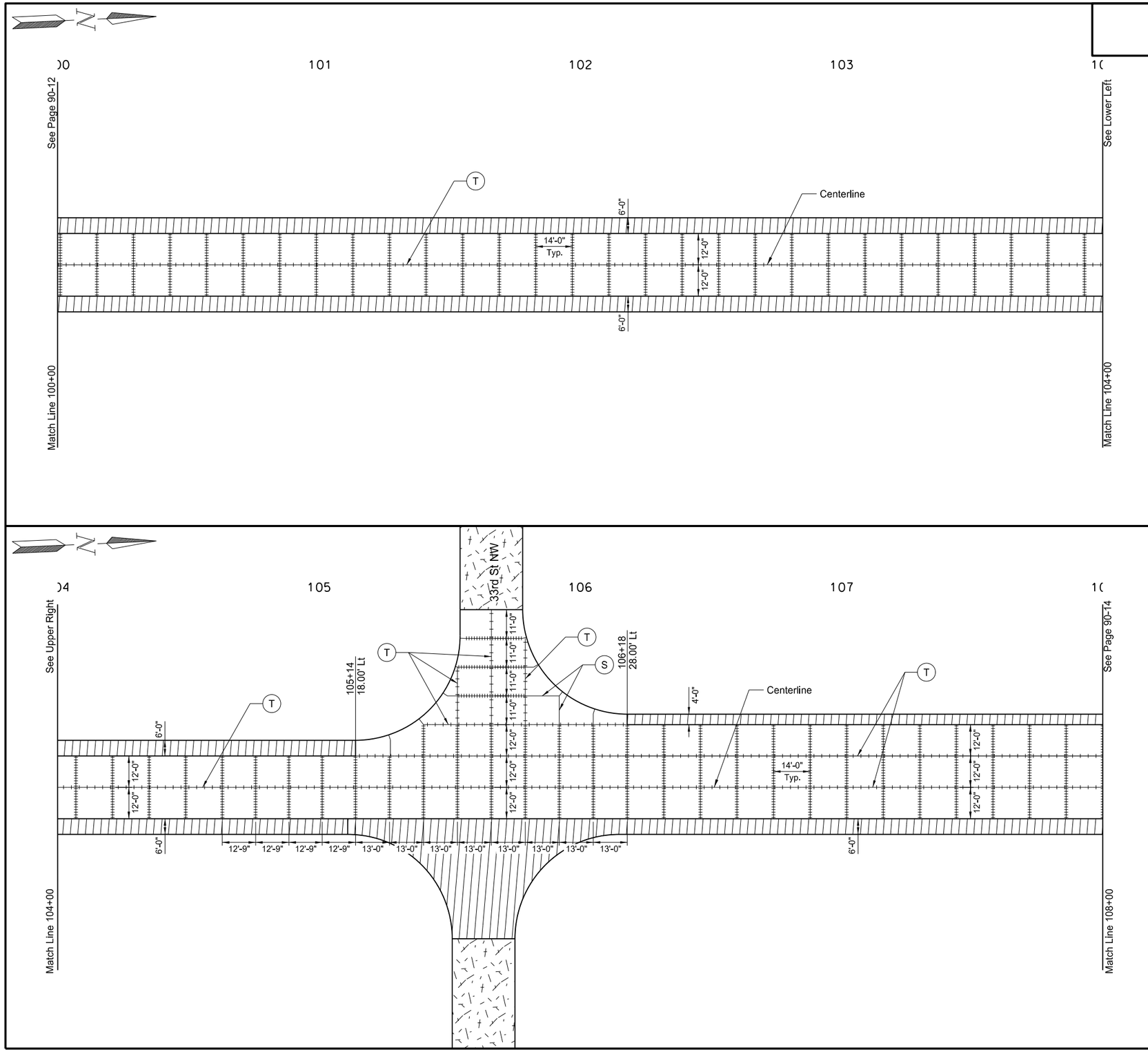

T Tied Joint with Hot Pour Seal - See Detail

S Sawed Longitudinal Joint

Doweled Joint - Placed in driving lanes only @ Transverse Joint Spacing (Continuous)

This document was originally issued and sealed by William Doerr, Registration Number PE- 7113, on 12/04/05 and the original document is stored at the North Dakota Department of Transportation

Paving Joint Layouts

ND 58

Jct 200 to Jct 1804

STATE	PROJECT NO.	SECTION NO.	SHEET NO.
ND	SOIB-7-058(013)000	90	14

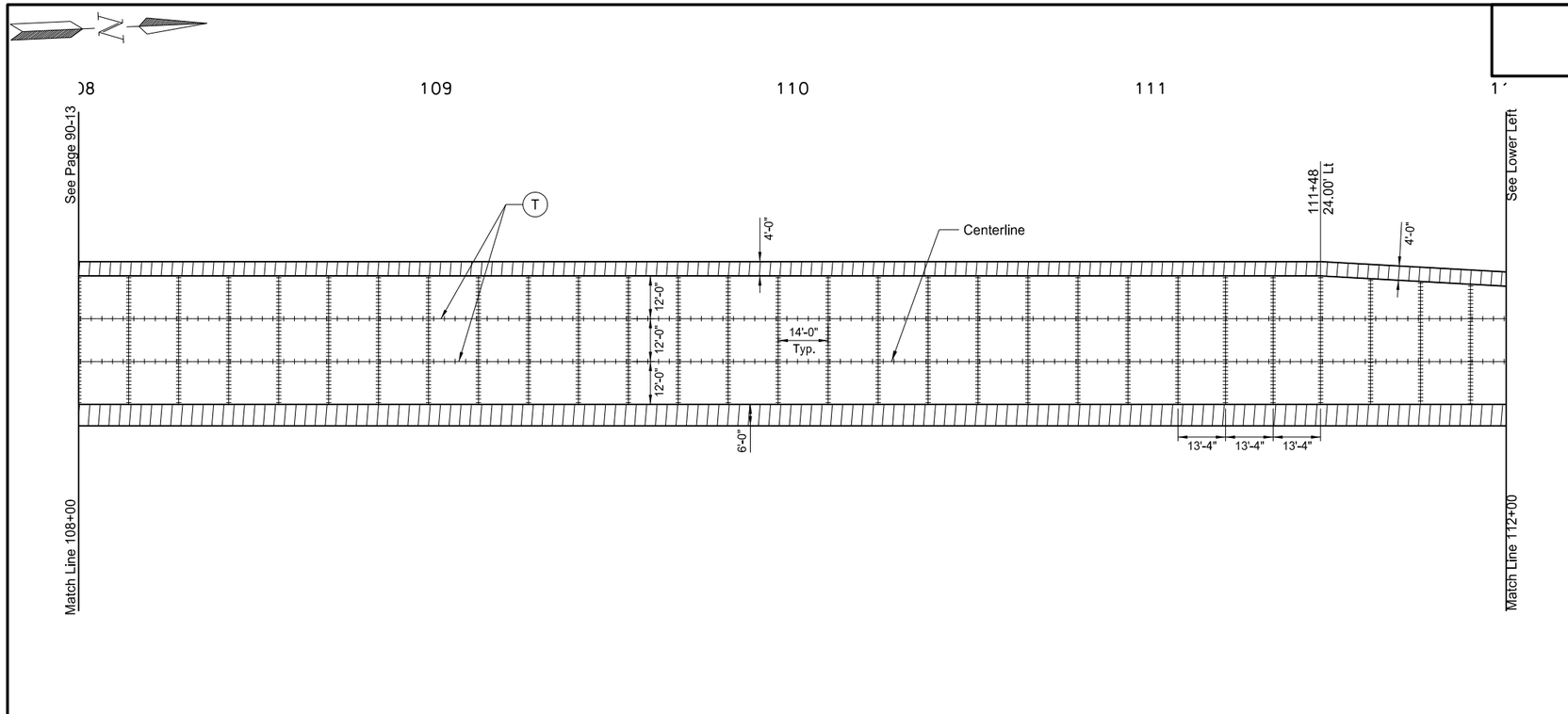

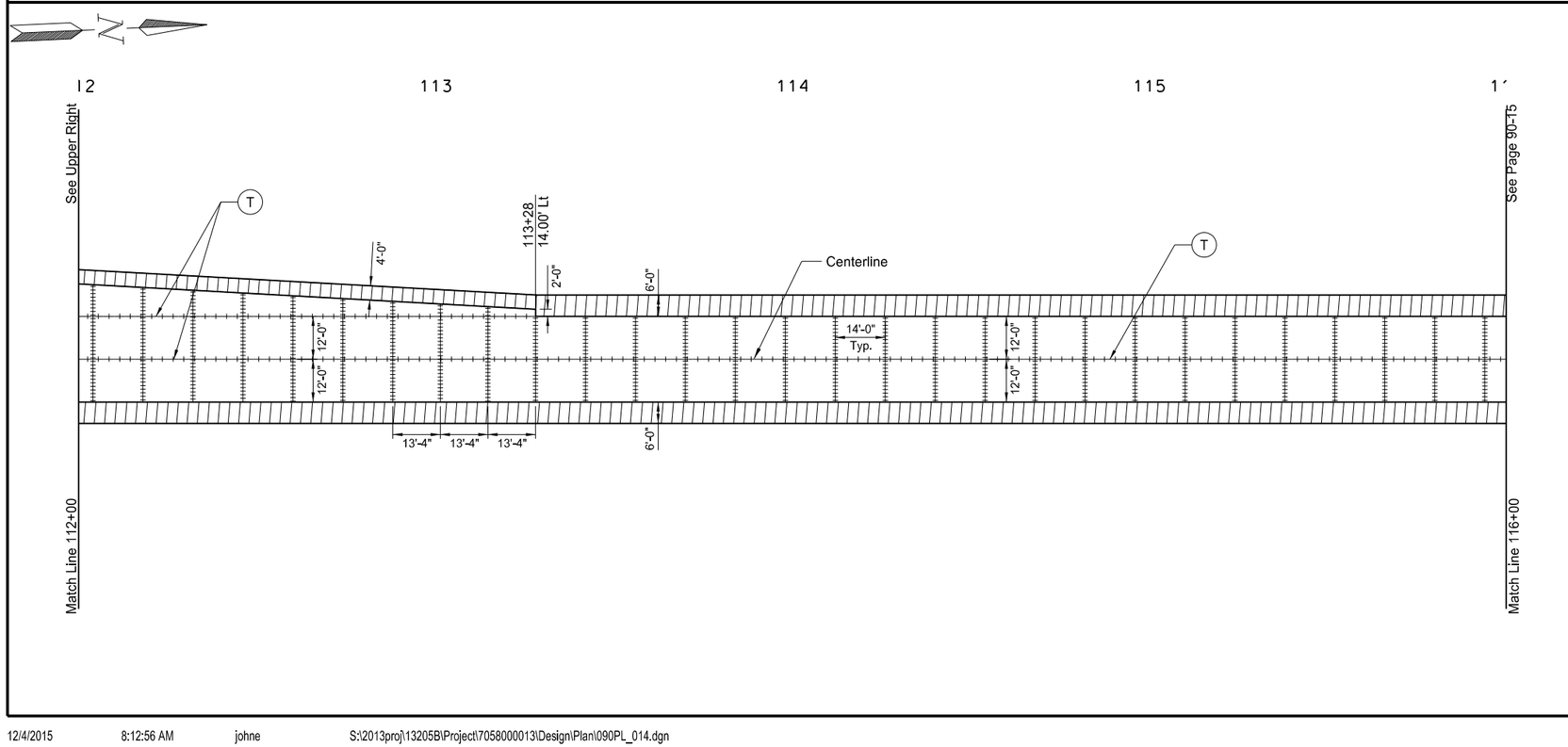

T Tied Joint with Hot Pour Seal - See Detail

S Sawed Longitudinal Joint

Doweled Joint - Placed in driving lanes only @ Transverse Joint Spacing (Continuous)

This document was originally issued and sealed by William Doerr, Registration Number PE- 7113, on 12/04/05 and the original document is stored at the North Dakota Department of Transportation

Paving Joint Layouts

ND 58

Jct 200 to Jct 1804

STATE	PROJECT NO.	SECTION NO.	SHEET NO.
ND	SOIB-7-058(013)000	90	15

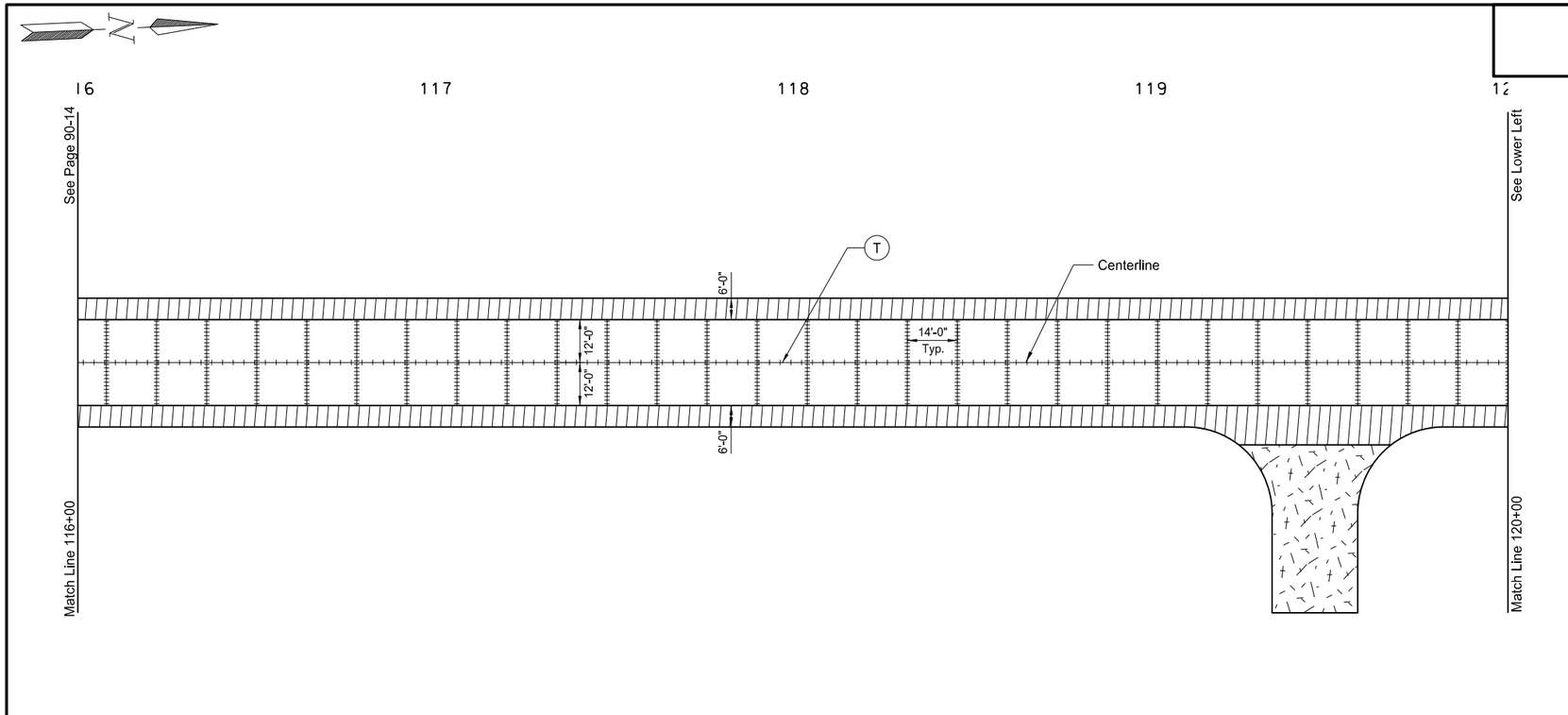

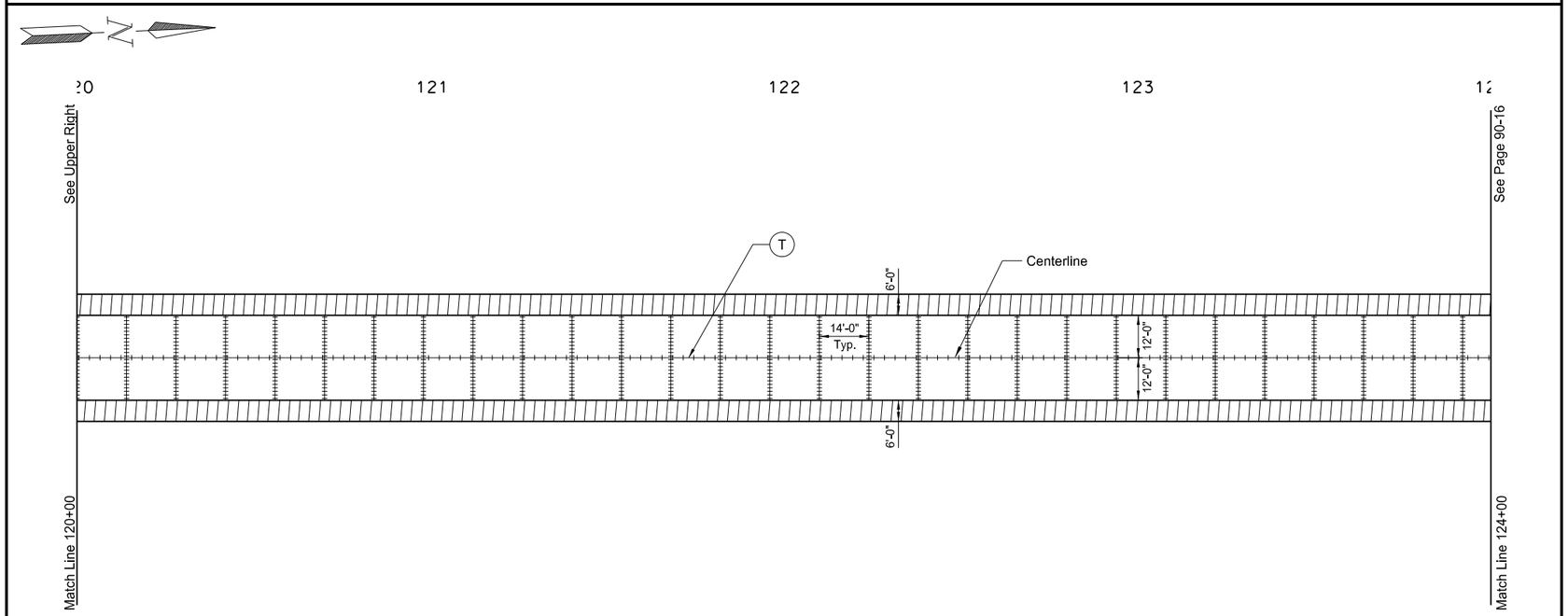

(T) Tied Joint with Hot Pour Seal - See Detail

(S) Sawed Longitudinal Joint

Doweled Joint - Placed in driving lanes only @ Transverse Joint Spacing (Continuous)

This document was originally issued and sealed by William Doerr, Registration Number PE- 7113, on 12/04/05 and the original document is stored at the North Dakota Department of Transportation

Paving Joint Layouts

ND 58

Jct 200 to Jct 1804

STATE	PROJECT NO.	SECTION NO.	SHEET NO.
ND	SOIB-7-058(013)000	90	16

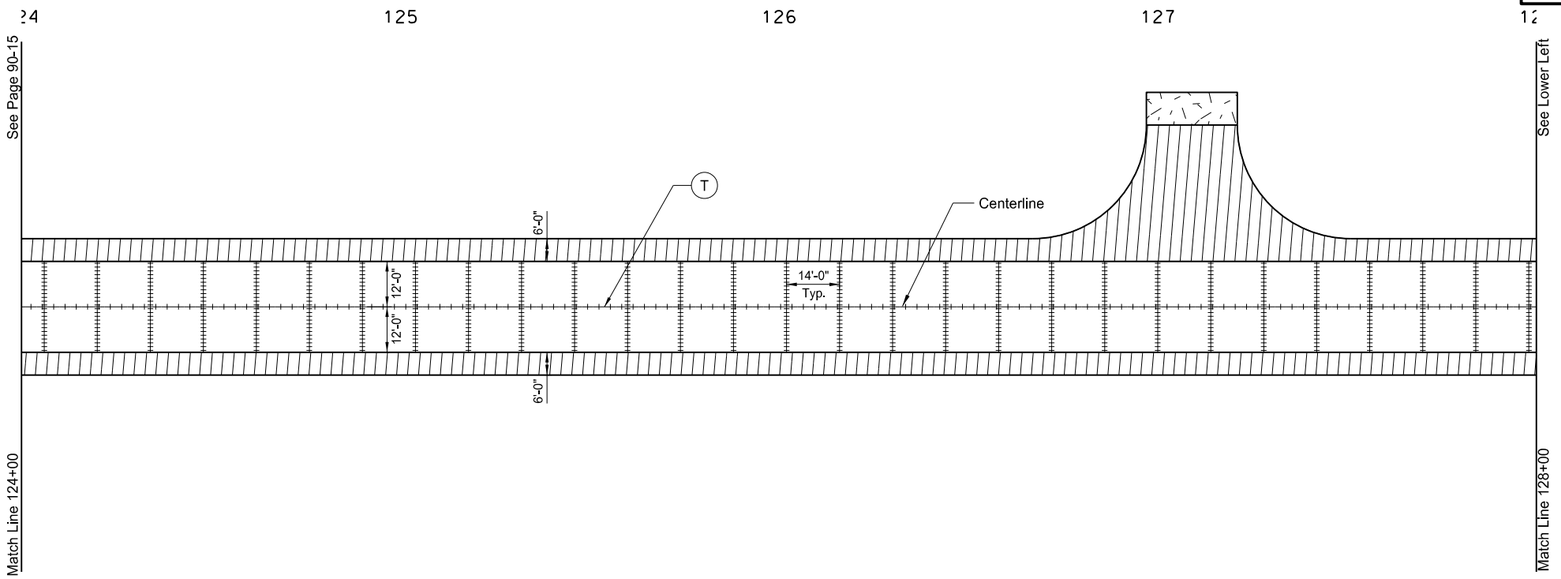

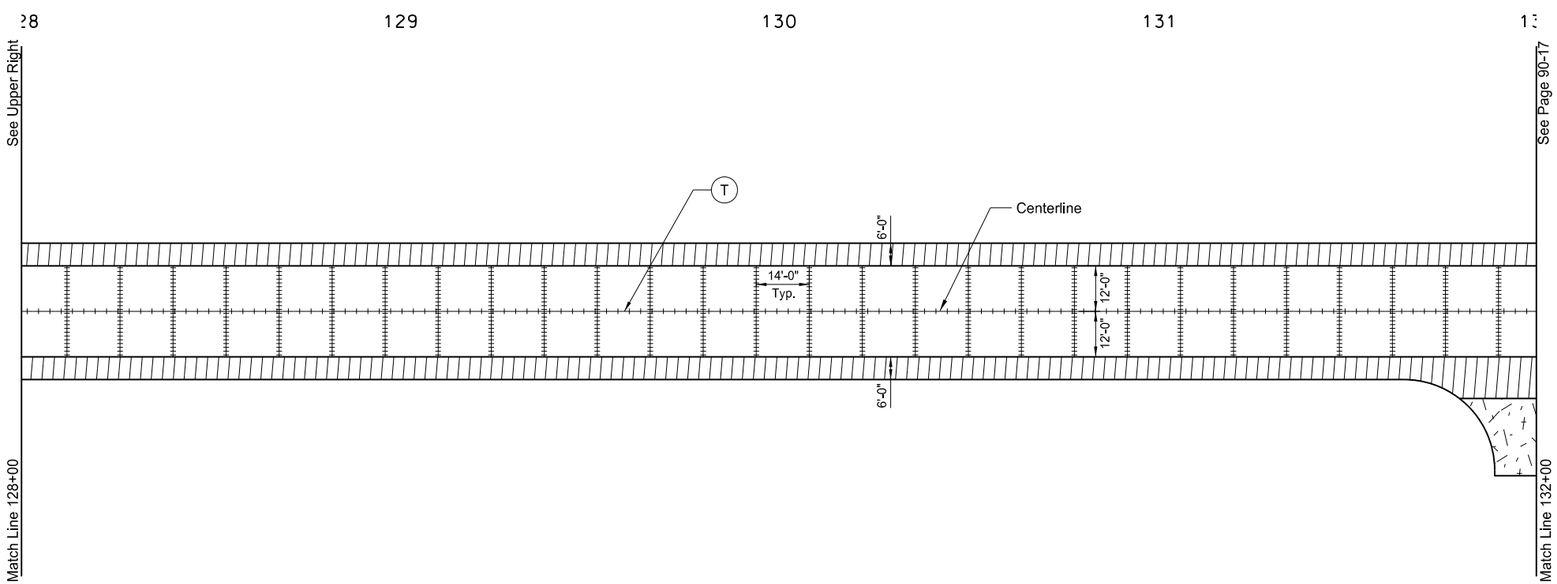

T Tied Joint with Hot Pour Seal - See Detail

S Sawed Longitudinal Joint

Doweled Joint - Placed in driving lanes only @ Transverse Joint Spacing (Continuous)

This document was originally issued and sealed by William Doerr, Registration Number PE- 7113, on 12/04/05 and the original document is stored at the North Dakota Department of Transportation

Paving Joint Layouts

ND 58

Jct 200 to Jct 1804

STATE	PROJECT NO.	SECTION NO.	SHEET NO.
ND	SOIB-7-058(013)000	90	17

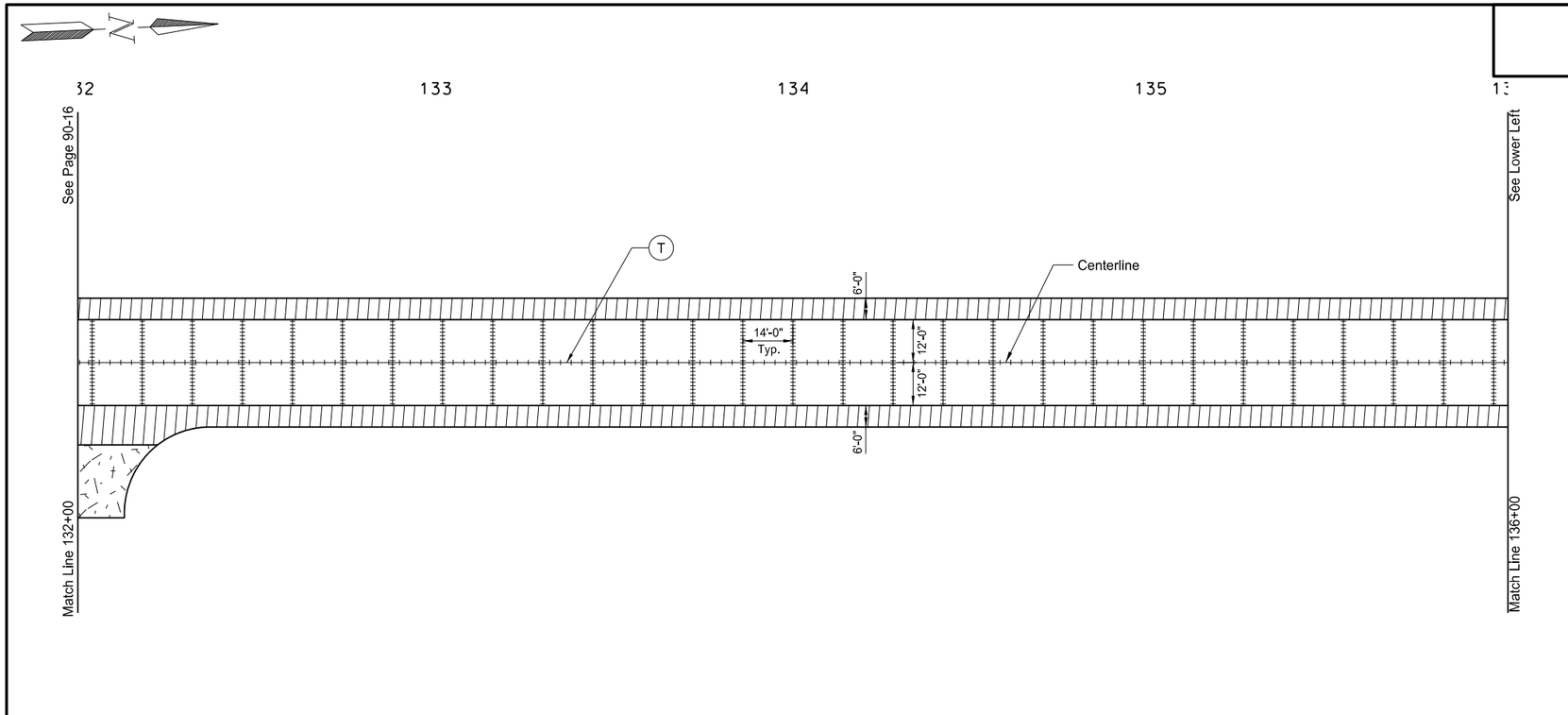

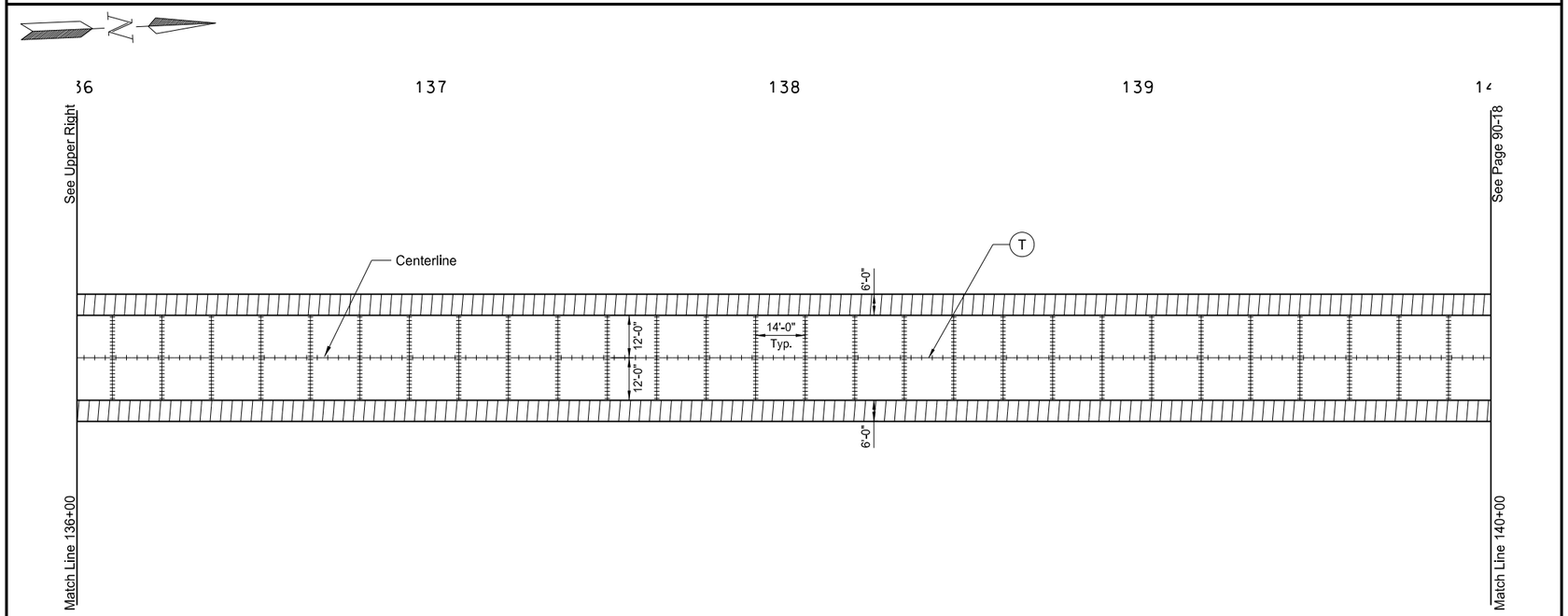

(T) Tied Joint with Hot Pour Seal - See Detail

(S) Sawed Longitudinal Joint

Doweled Joint - Placed in driving lanes only @ Transverse Joint Spacing (Continuous)

This document was originally issued and sealed by William Doerr, Registration Number PE- 7113, on 12/04/05 and the original document is stored at the North Dakota Department of Transportation

Paving Joint Layouts

ND 58

Jct 200 to Jct 1804

STATE	PROJECT NO.	SECTION NO.	SHEET NO.
ND	SOIB-7-058(013)000	90	18

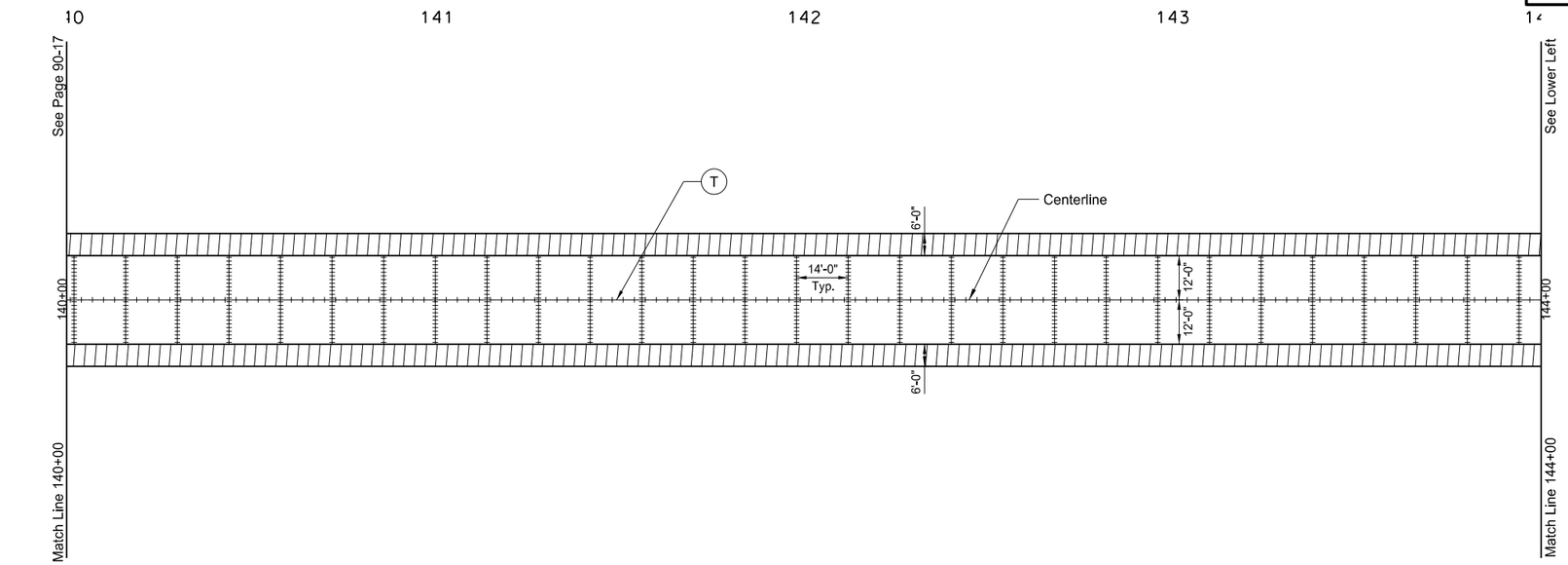

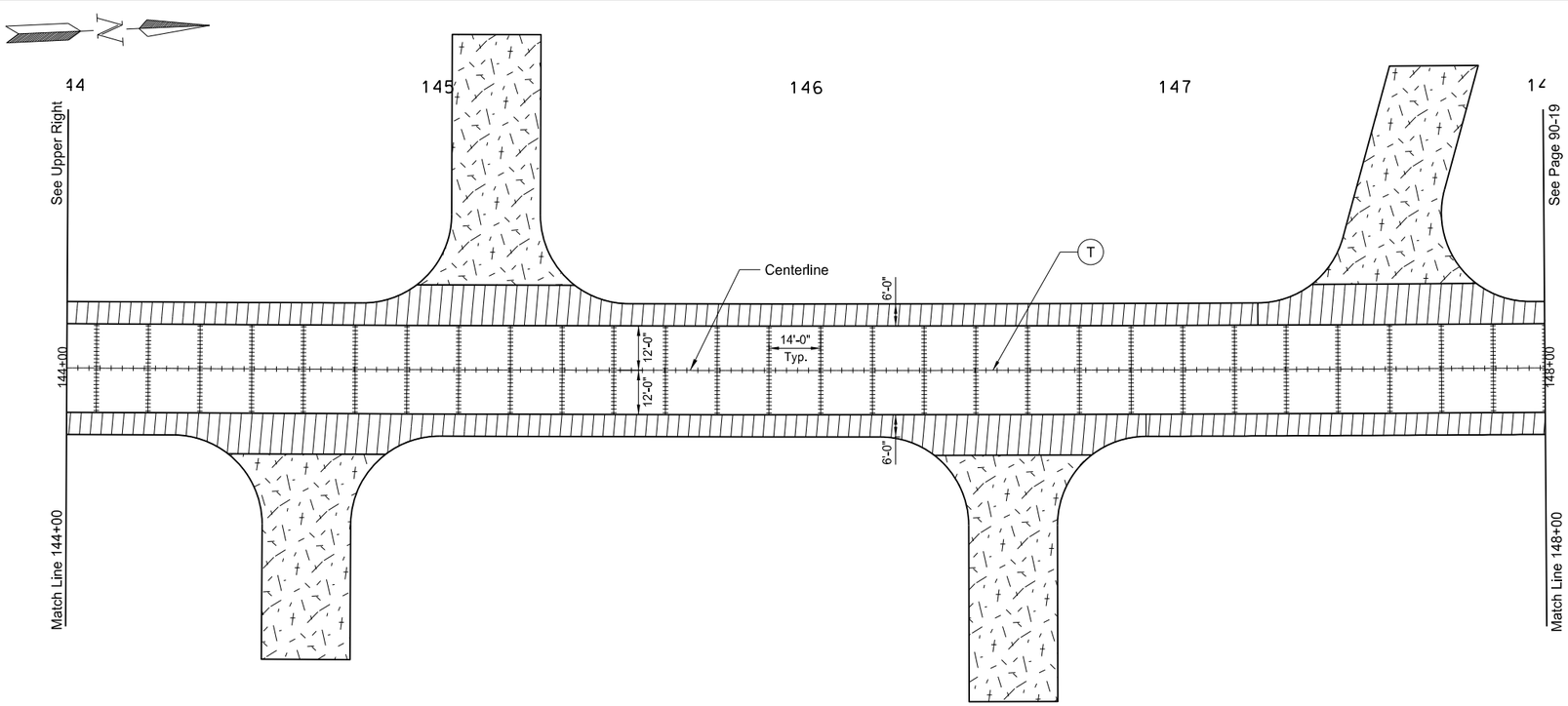

(T) Tied Joint with Hot Pour Seal - See Detail

(S) Sawed Longitudinal Joint

Doweled Joint - Placed in driving lanes only @ Transverse Joint Spacing (Continuous)

This document was originally issued and sealed by William Doerr, Registration Number PE- 7113, on 12/04/05 and the original document is stored at the North Dakota Department of Transportation

Paving Joint Layouts

ND 58

Jct 200 to Jct 1804

STATE	PROJECT NO.	SECTION NO.	SHEET NO.
ND	SOIB-7-058(013)000	90	19

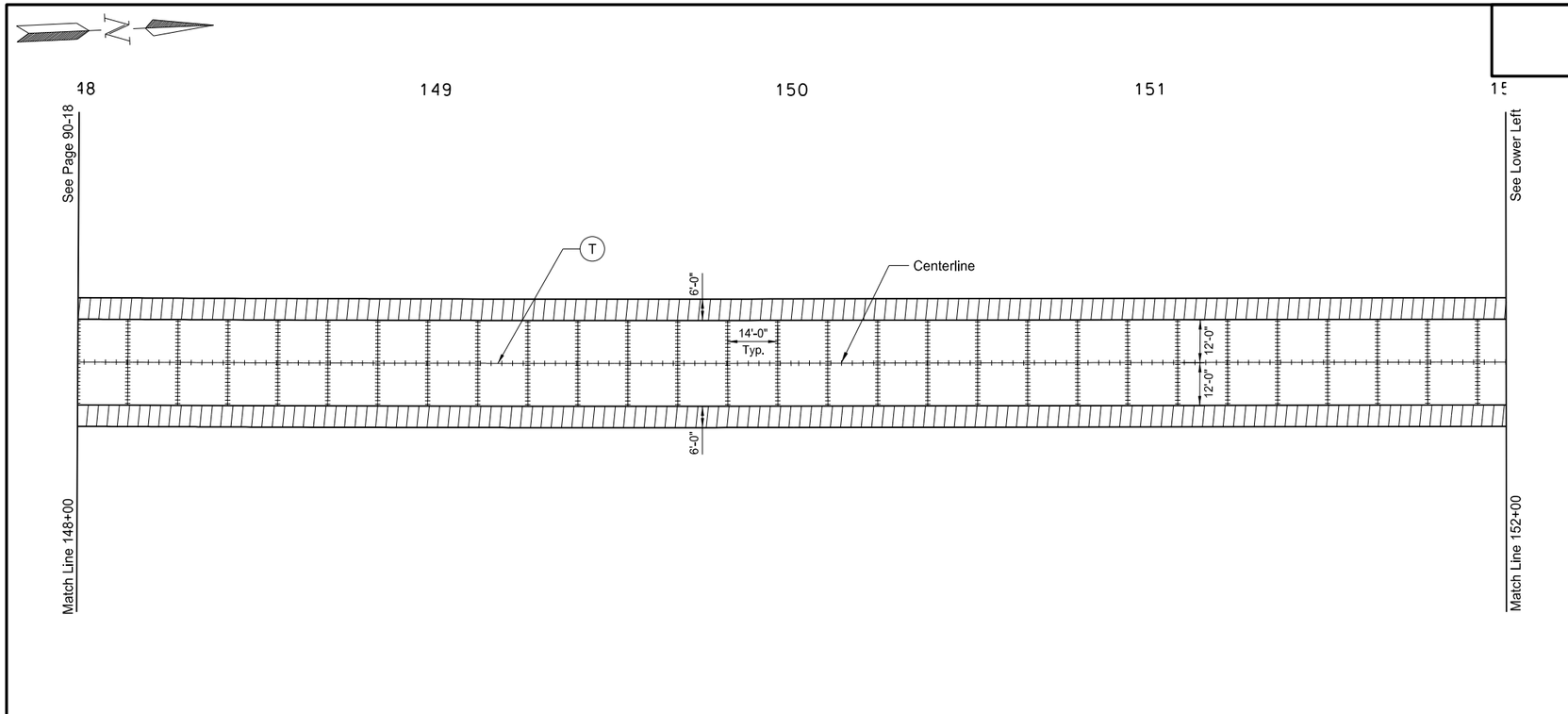

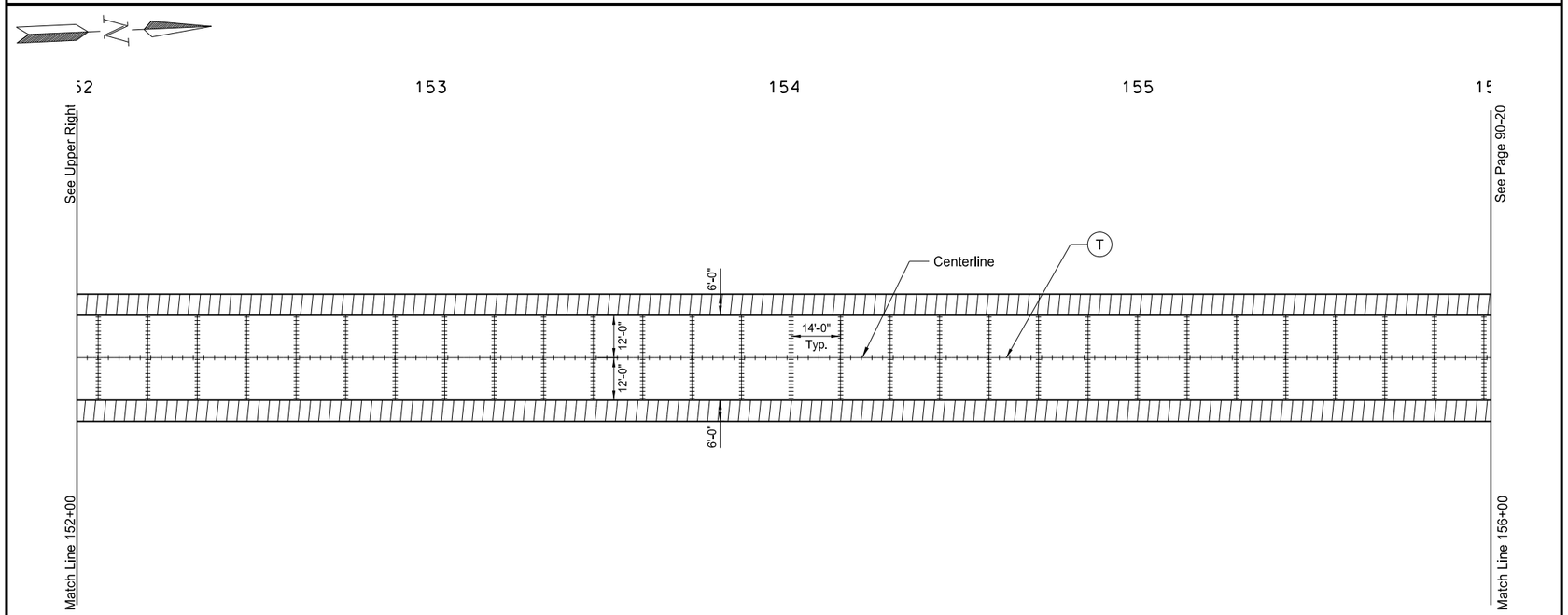

(T) Tied Joint with Hot Pour Seal - See Detail

(S) Sawed Longitudinal Joint

Doweled Joint - Placed in driving lanes only @ Transverse Joint Spacing (Continuous)

This document was originally issued and sealed by William Doerr, Registration Number PE- 7113, on 12/04/05 and the original document is stored at the North Dakota Department of Transportation

Paving Joint Layouts

ND 58

Jct 200 to Jct 1804

STATE	PROJECT NO.	SECTION NO.	SHEET NO.
ND	SOIB-7-058(013)000	90	20

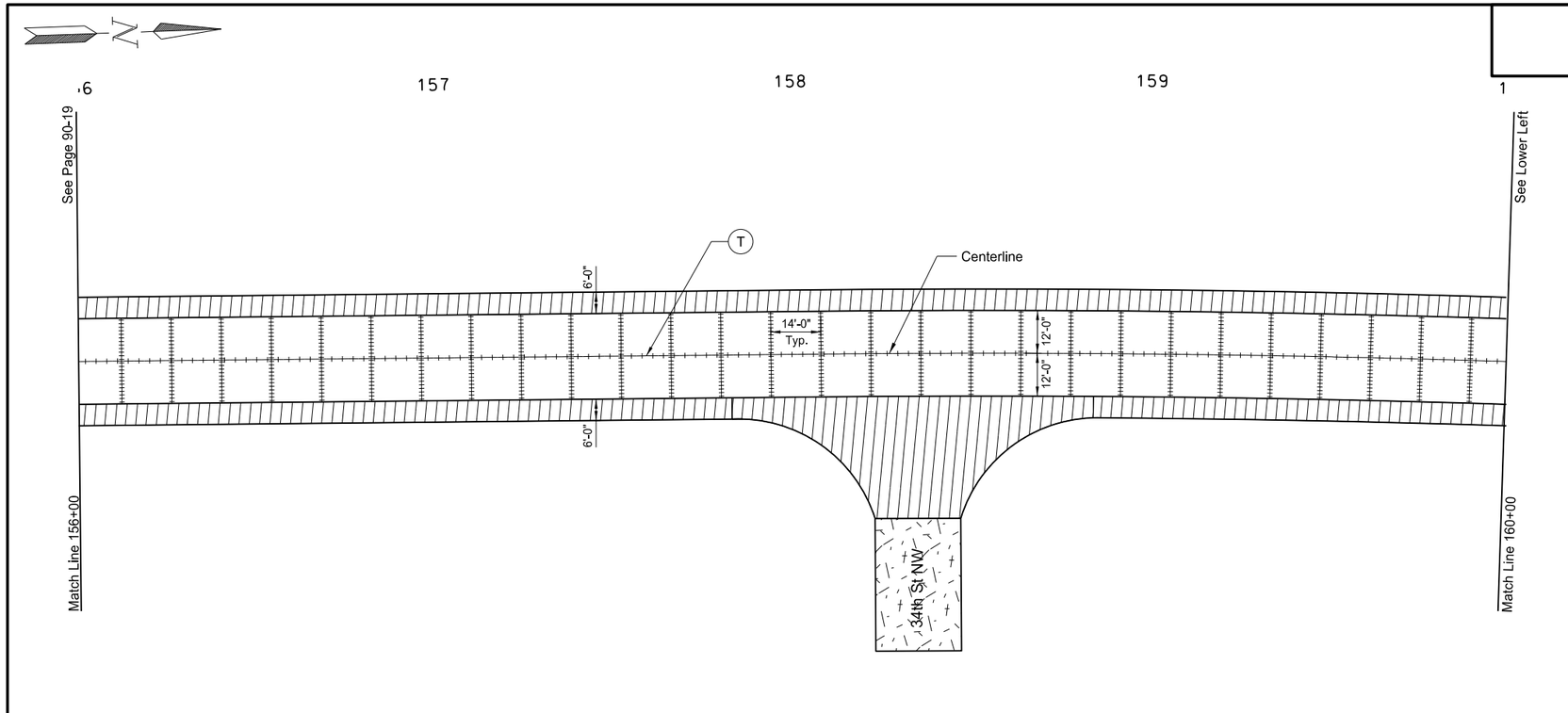

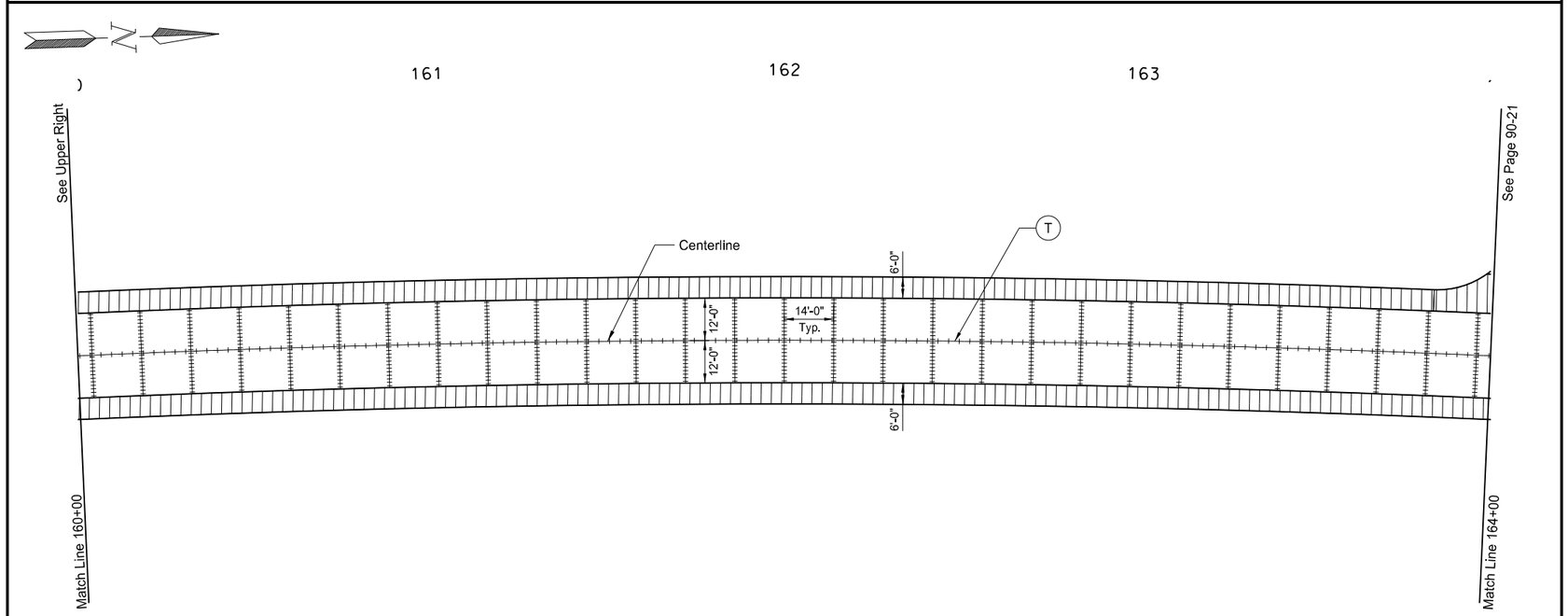

T Tied Joint with Hot Pour Seal - See Detail

S Sawed Longitudinal Joint

Doweled Joint - Placed in driving lanes only @ Transverse Joint Spacing (Continuous)

This document was originally issued and sealed by William Doerr, Registration Number PE- 7113, on 12/04/05 and the original document is stored at the North Dakota Department of Transportation

Paving Joint Layouts

ND 58

Jct 200 to Jct 1804

STATE	PROJECT NO.	SECTION NO.	SHEET NO.
ND	SOIB-7-058(013)000	90	21

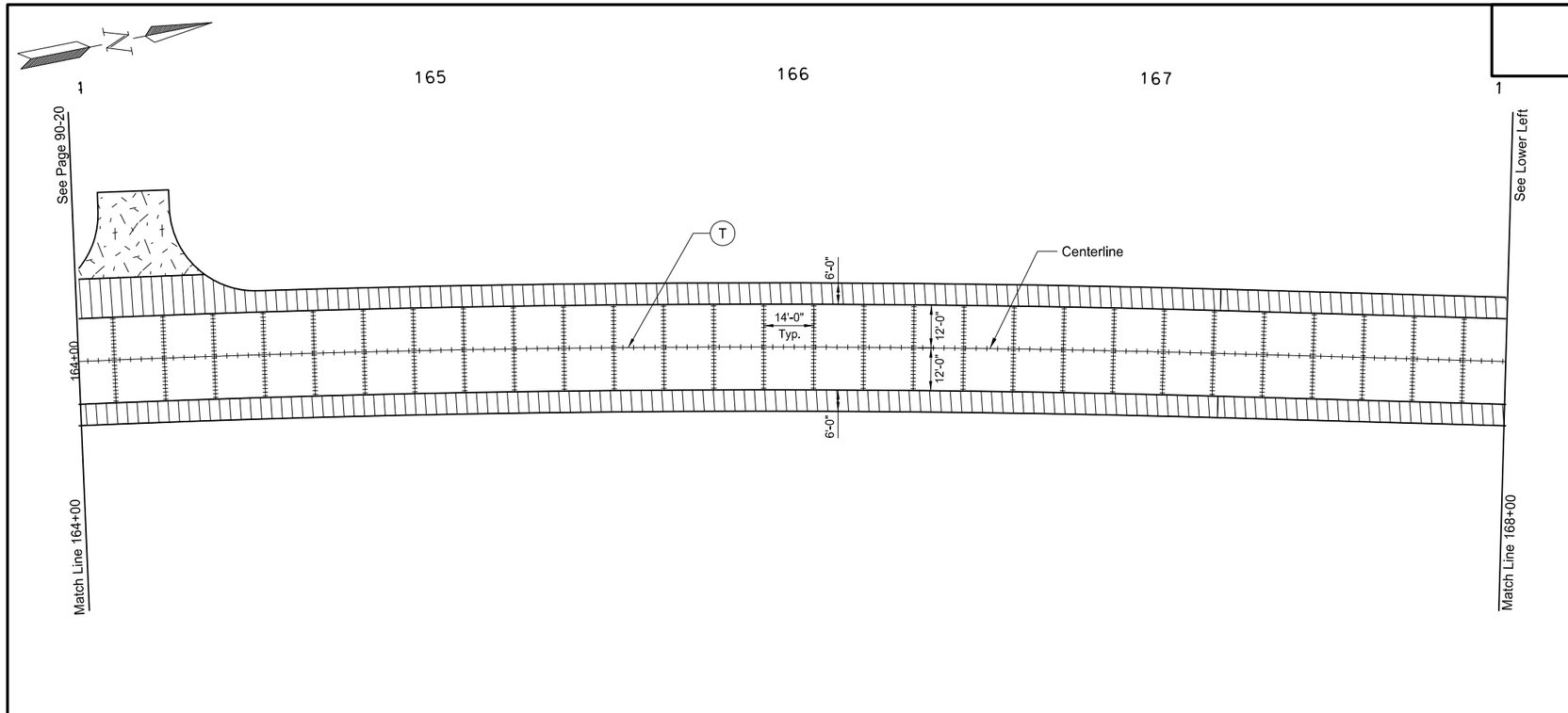

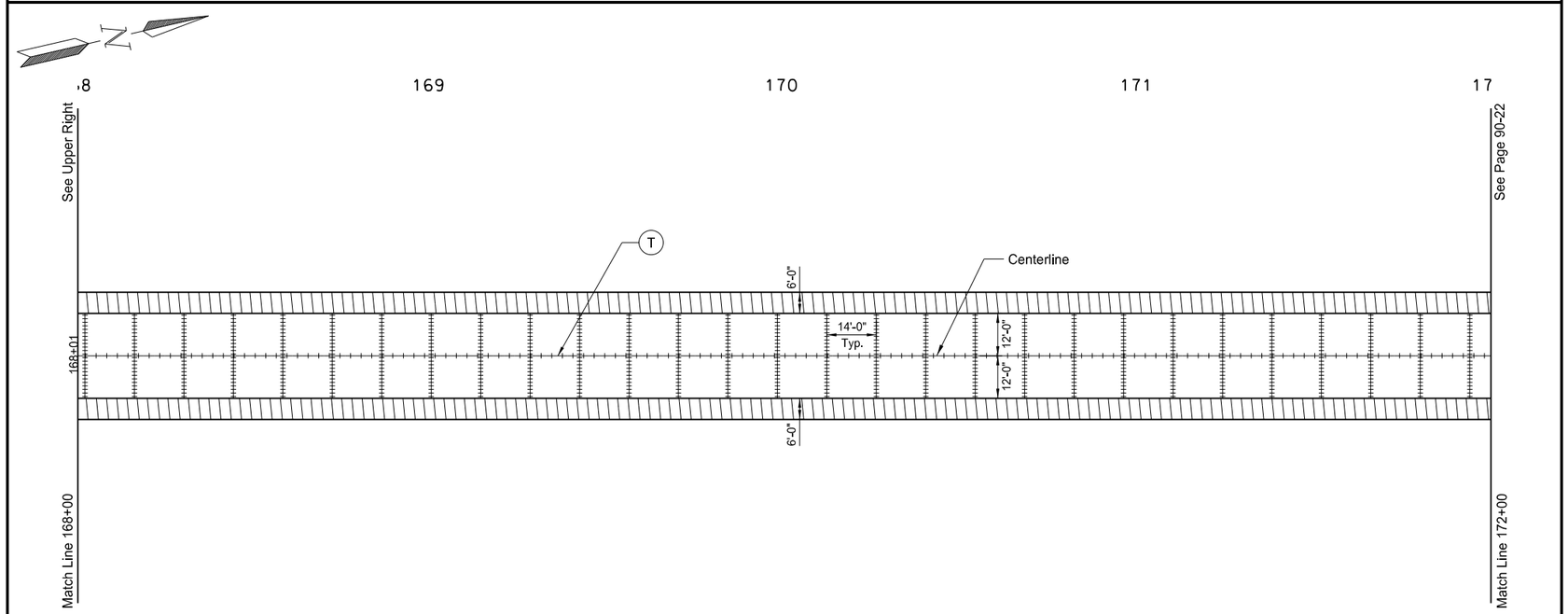

(T) Tied Joint with Hot Pour Seal - See Detail

(S) Sawed Longitudinal Joint

Doweled Joint - Placed in driving lanes only @ Transverse Joint Spacing (Continuous)

This document was originally issued and sealed by William Doerr, Registration Number PE- 7113, on 12/04/05 and the original document is stored at the North Dakota Department of Transportation

Paving Joint Layouts

ND 58

Jct 200 to Jct 1804

STATE	PROJECT NO.	SECTION NO.	SHEET NO.
ND	SOIB-7-058(013)000	90	22

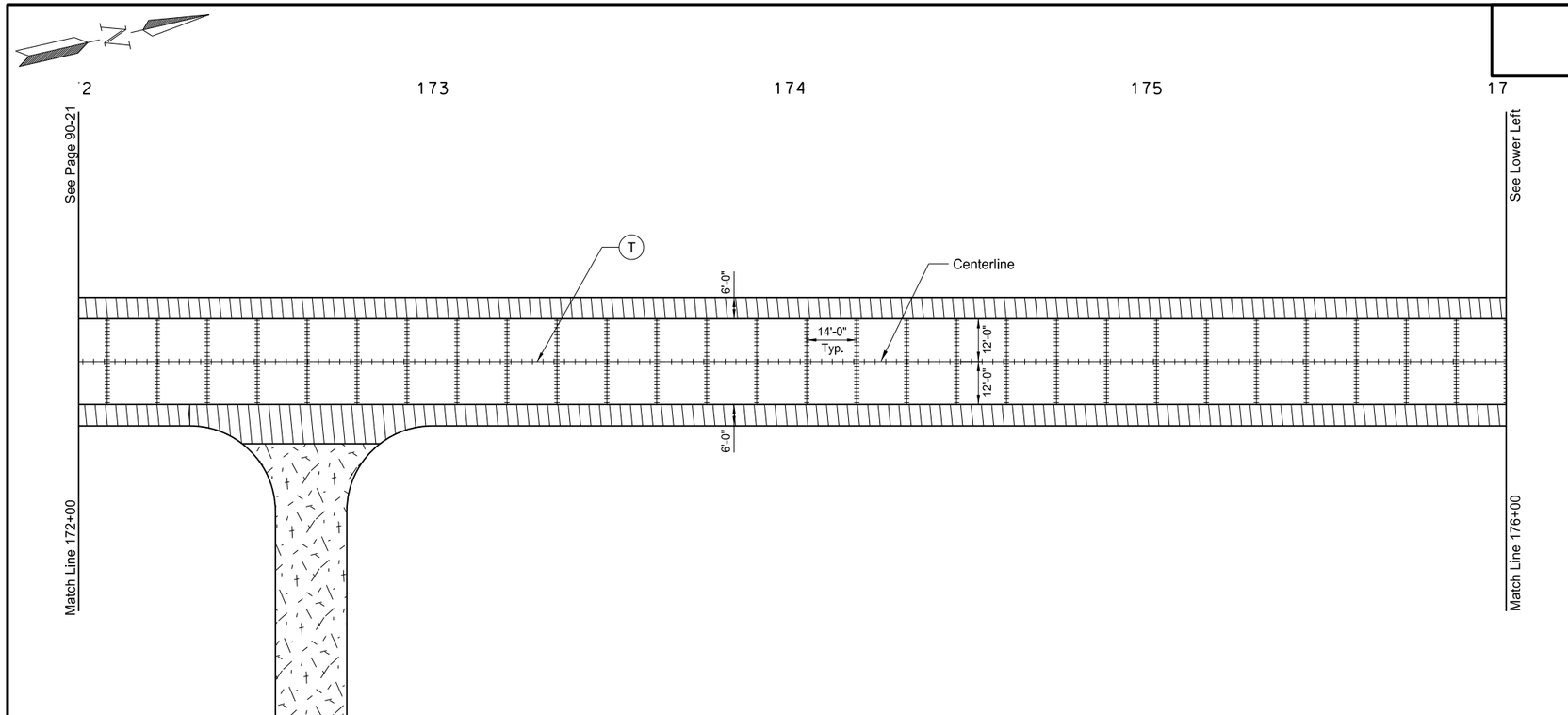

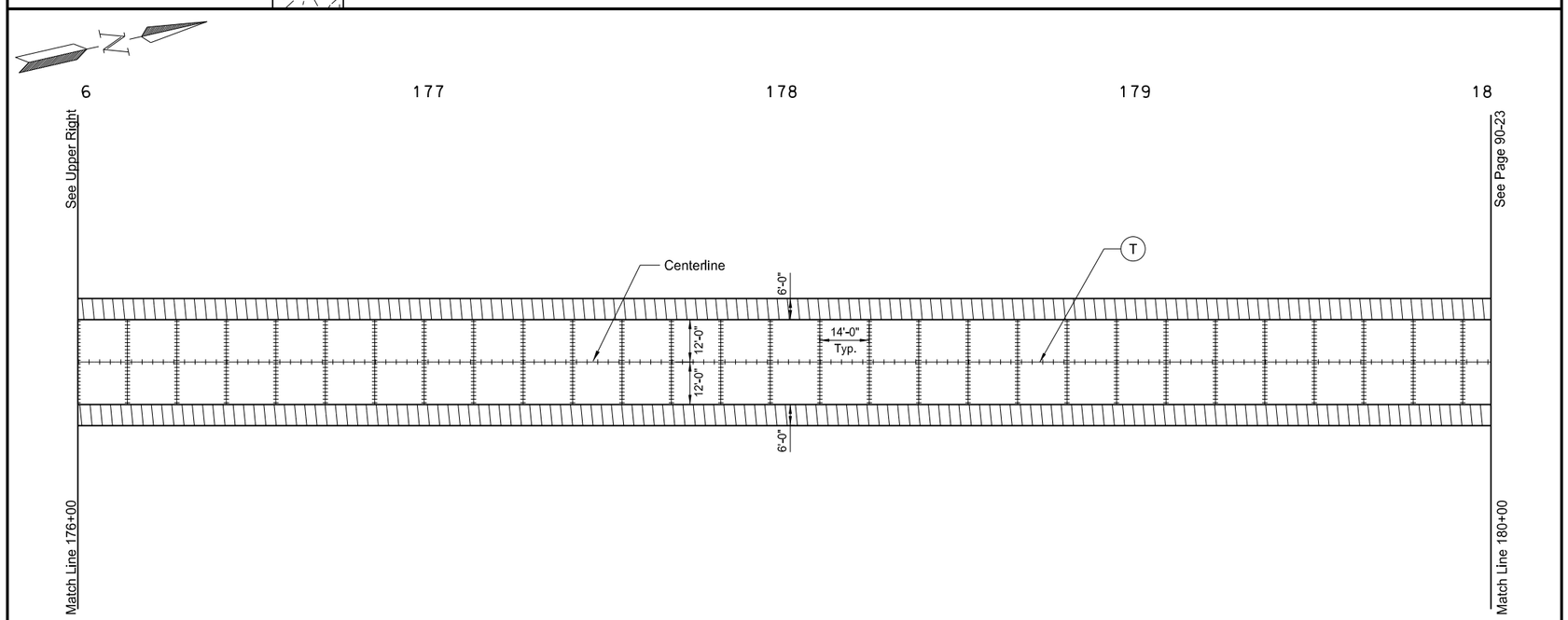

(T) Tied Joint with Hot Pour Seal - See Detail

(S) Sawed Longitudinal Joint

Doweled Joint - Placed in driving lanes only @ Transverse Joint Spacing (Continuous)

This document was originally issued and sealed by William Doerr, Registration Number PE- 7113, on 12/04/05 and the original document is stored at the North Dakota Department of Transportation

Paving Joint Layouts

ND 58

Jct 200 to Jct 1804

STATE	PROJECT NO.	SECTION NO.	SHEET NO.
ND	SOIB-7-058(013)000	90	23

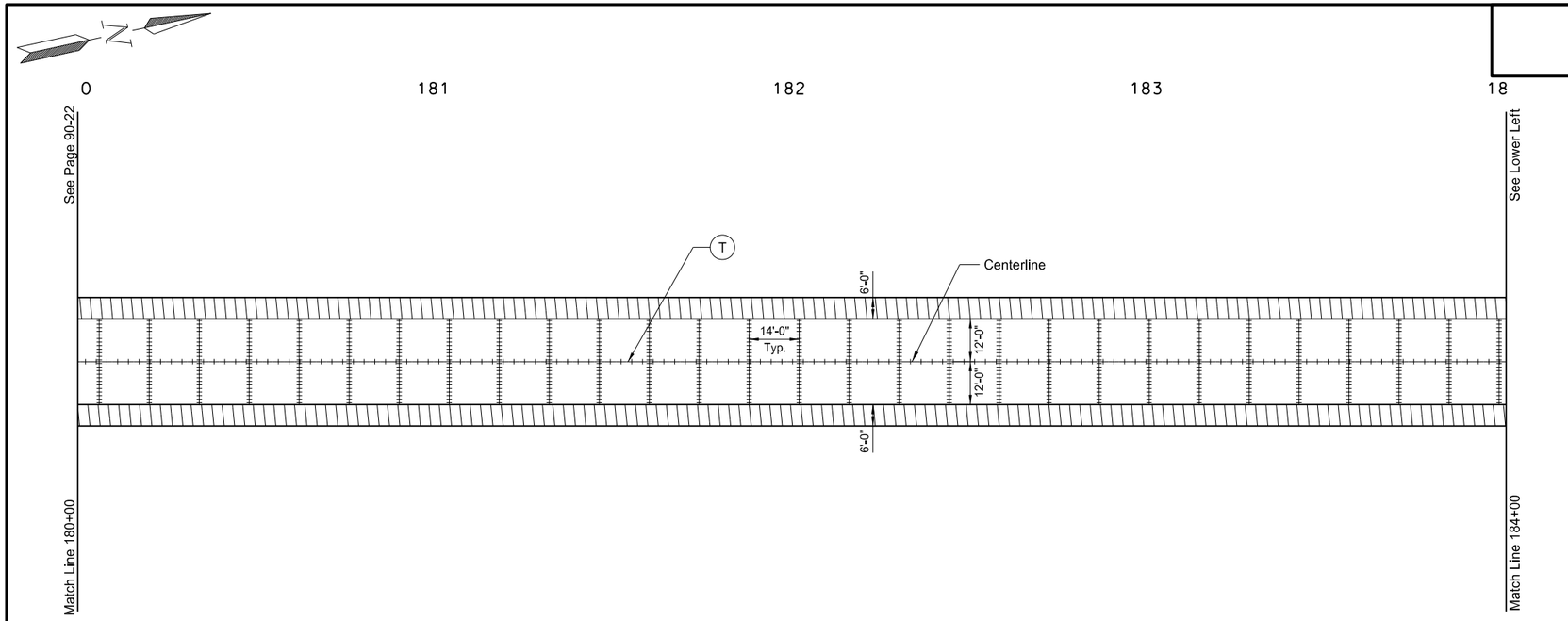

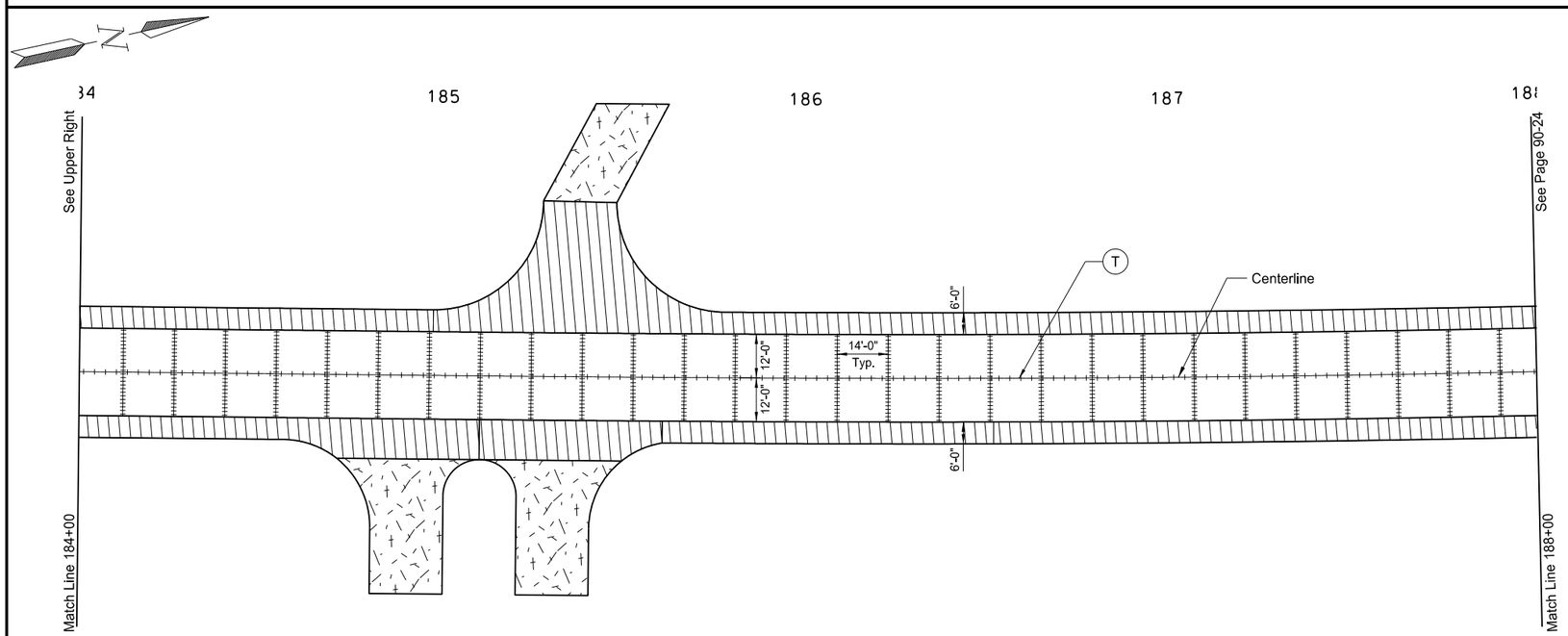

T Tied Joint with Hot Pour Seal - See Detail

S Sawed Longitudinal Joint

Doweled Joint - Placed in driving lanes only @ Transverse Joint Spacing (Continuous)

This document was originally issued and sealed by William Doerr, Registration Number PE- 7113, on 12/04/05 and the original document is stored at the North Dakota Department of Transportation

Paving Joint Layouts

ND 58

Jct 200 to Jct 1804

STATE	PROJECT NO.	SECTION NO.	SHEET NO.
ND	SOIB-7-058(013)000	90	24

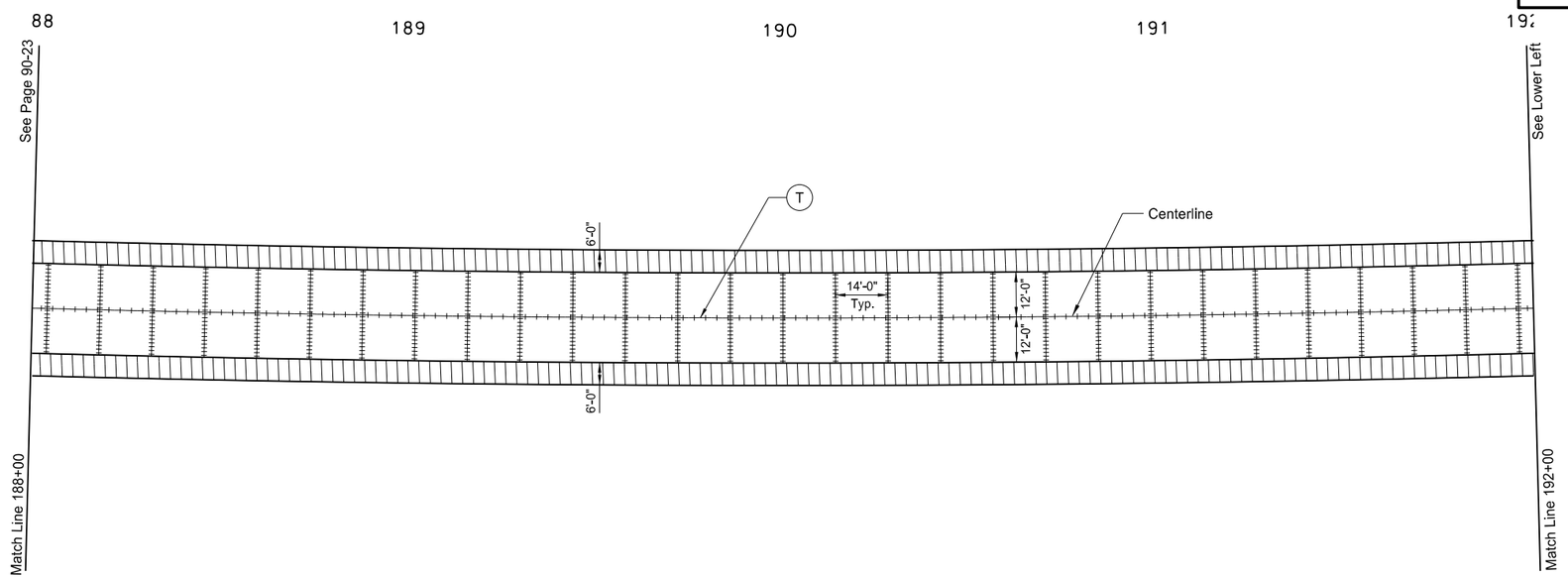

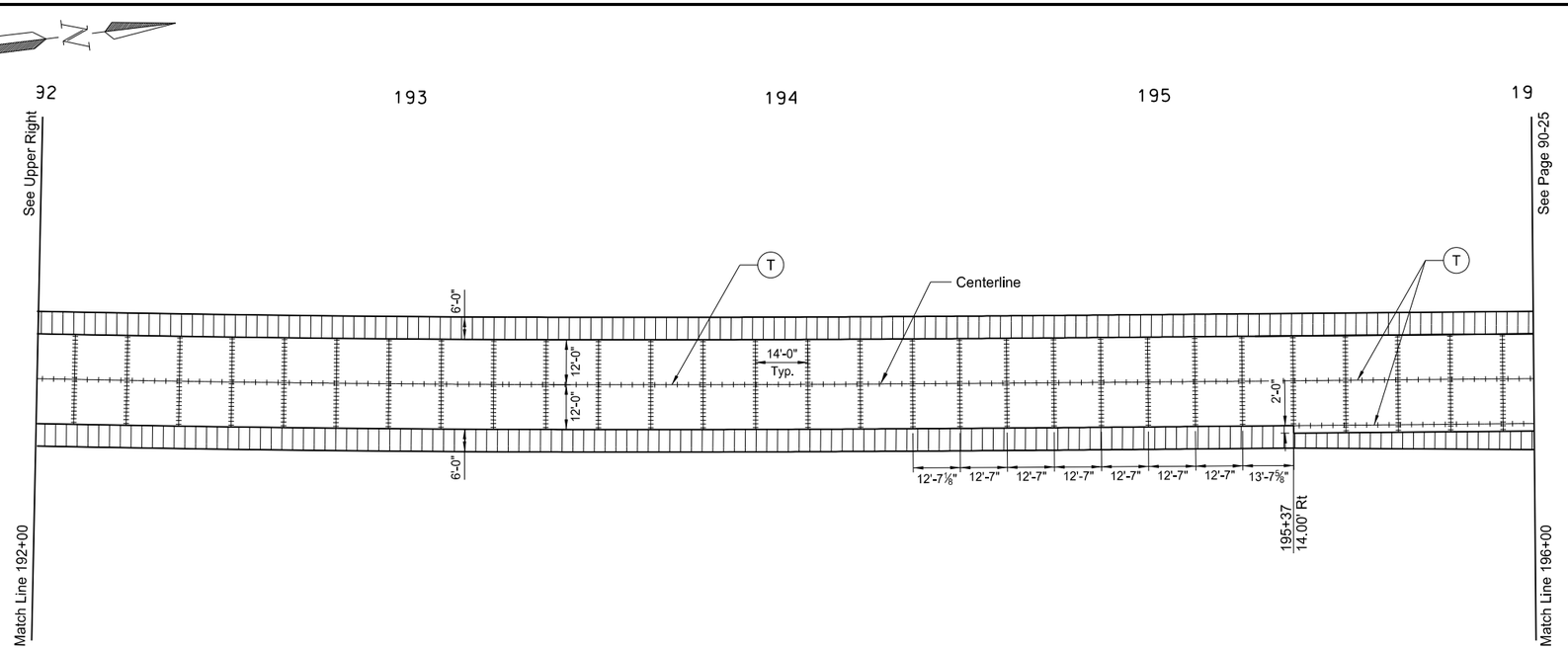

T Tied Joint with Hot Pour Seal - See Detail

S Sawed Longitudinal Joint

Doweled Joint - Placed in driving lanes only @ Transverse Joint Spacing (Continuous)

This document was originally issued and sealed by William Doerr, Registration Number PE- 7113, on 12/04/05 and the original document is stored at the North Dakota Department of Transportation

Paving Joint Layouts

ND 58

Jct 200 to Jct 1804

STATE	PROJECT NO.	SECTION NO.	SHEET NO.
ND	SOIB-7-058(013)000	90	25

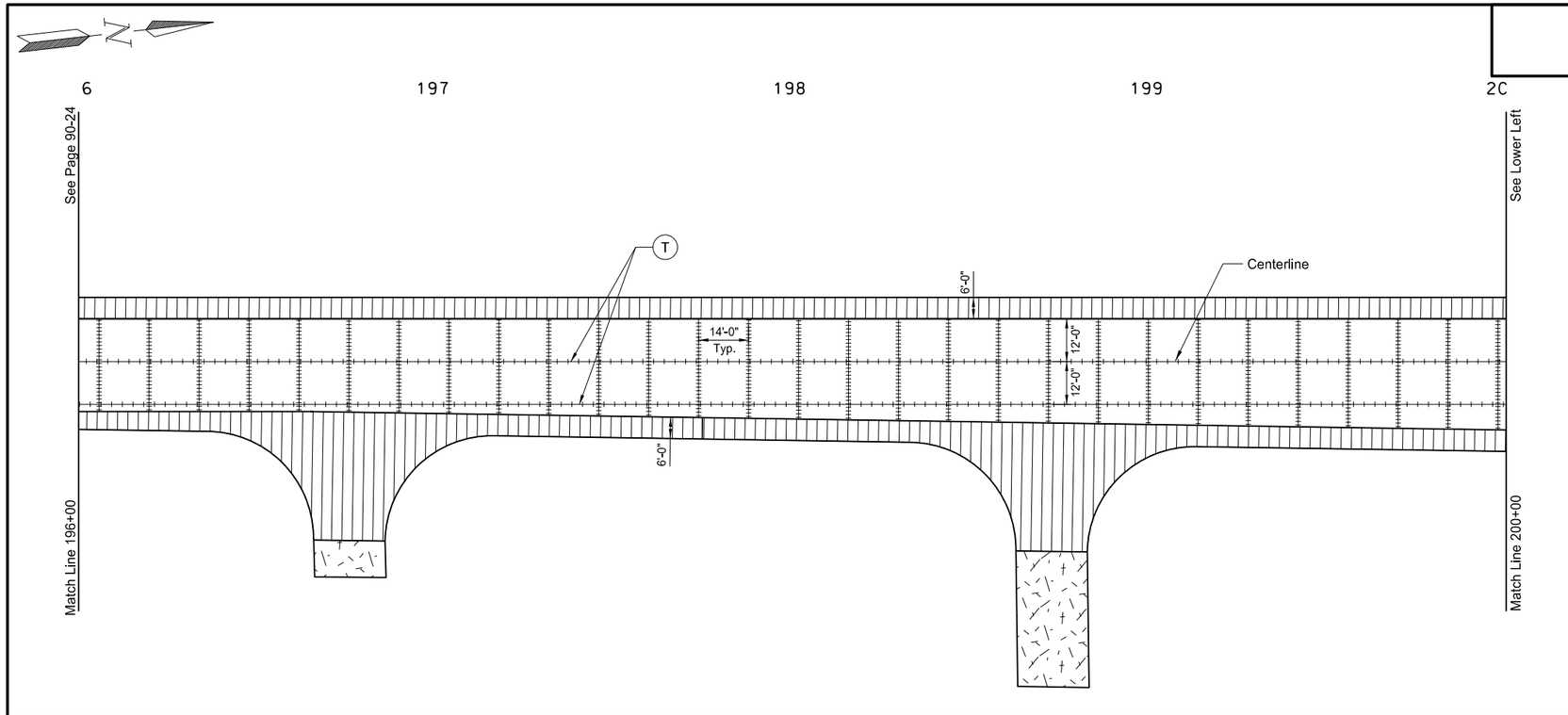

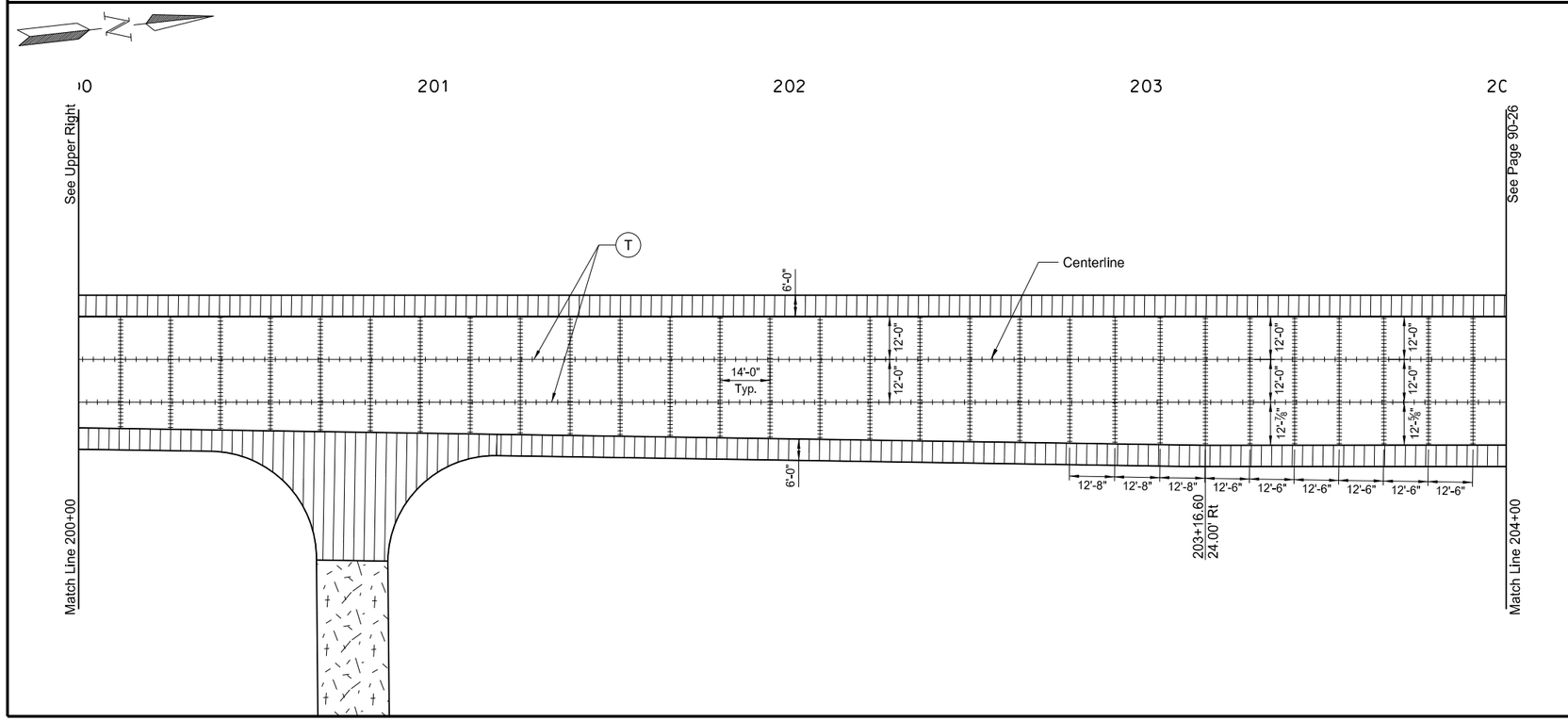

T Tied Joint with Hot Pour Seal - See Detail

S Sawed Longitudinal Joint

Doweled Joint - Placed in driving lanes only @ Transverse Joint Spacing (Continuous)

This document was originally issued and sealed by William Doerr, Registration Number PE- 7113, on 12/04/05 and the original document is stored at the North Dakota Department of Transportation

Paving Joint Layouts

ND 58

Jct 200 to Jct 1804

STATE	PROJECT NO.	SECTION NO.	SHEET NO.
ND	SOIB-7-058(013)000	90	26

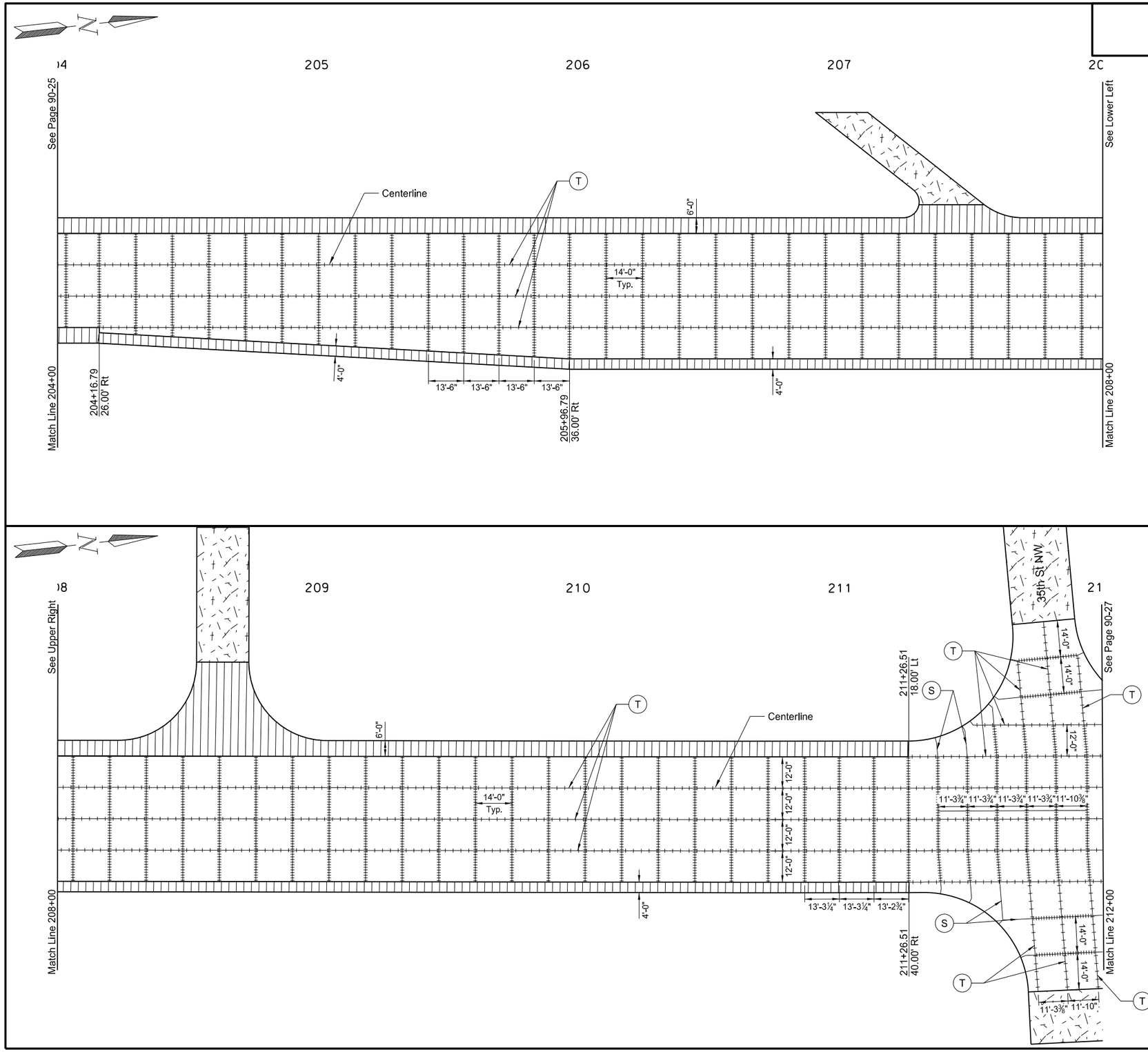

T Tied Joint with Hot Pour Seal - See Detail

S Sawed Longitudinal Joint

Doweled Joint - Placed in driving lanes only @ Transverse Joint Spacing (Continuous)

This document was originally issued and sealed by William Doerr, Registration Number PE- 7113, on 12/04/05 and the original document is stored at the North Dakota Department of Transportation

Paving Joint Layouts

ND 58

Jct 200 to Jct 1804

STATE	PROJECT NO.	SECTION NO.	SHEET NO.
ND	SOIB-7-058(013)000	90	27

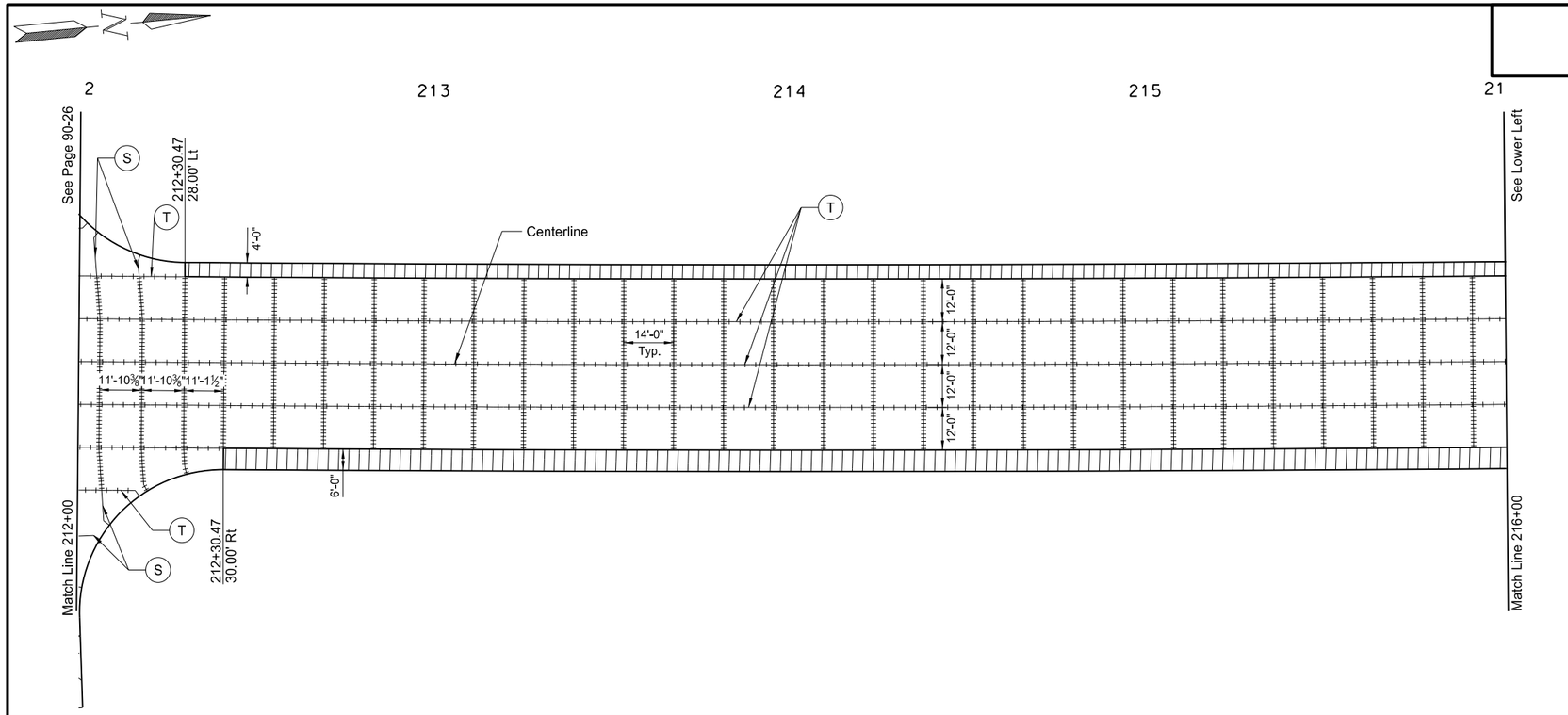

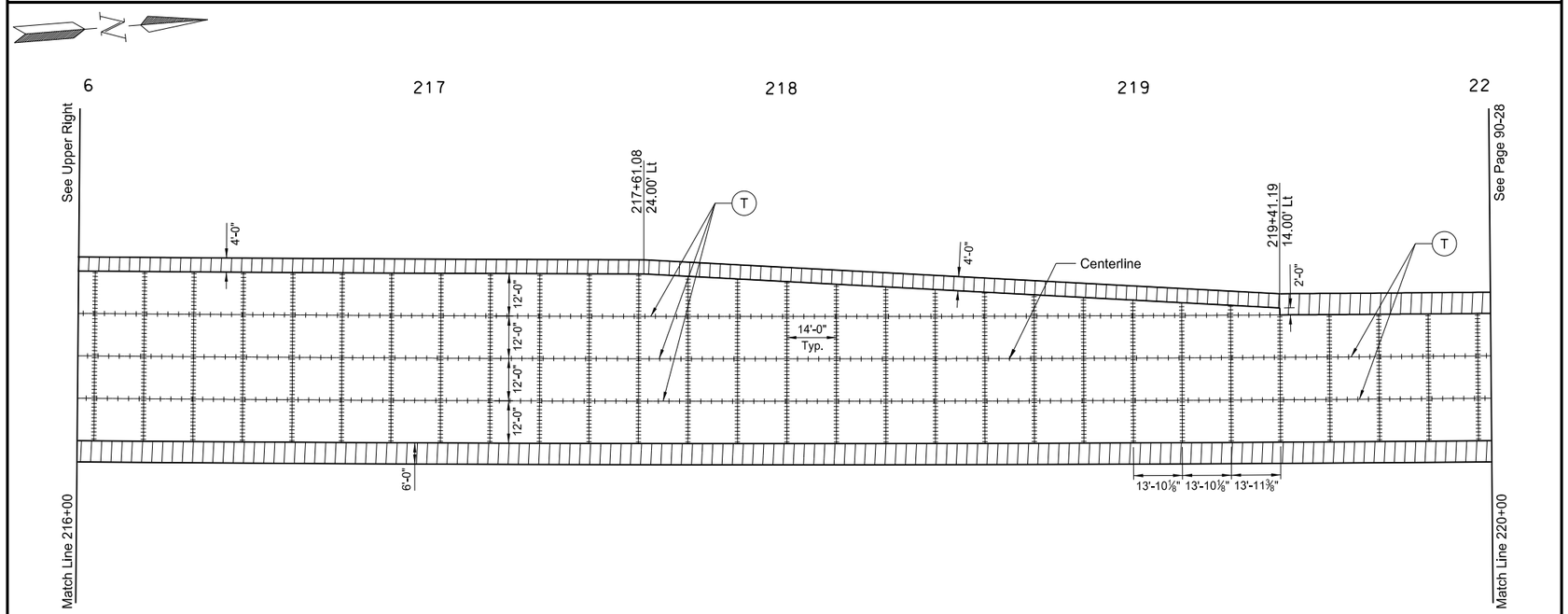

T Tied Joint with Hot Pour Seal - See Detail

S Sawed Longitudinal Joint

Doweled Joint - Placed in driving lanes only @ Transverse Joint Spacing (Continuous)

This document was originally issued and sealed by William Doerr, Registration Number PE- 7113, on 12/04/05 and the original document is stored at the North Dakota Department of Transportation

Paving Joint Layouts

ND 58

Jct 200 to Jct 1804

STATE	PROJECT NO.	SECTION NO.	SHEET NO.
ND	SOIB-7-058(013)000	90	28

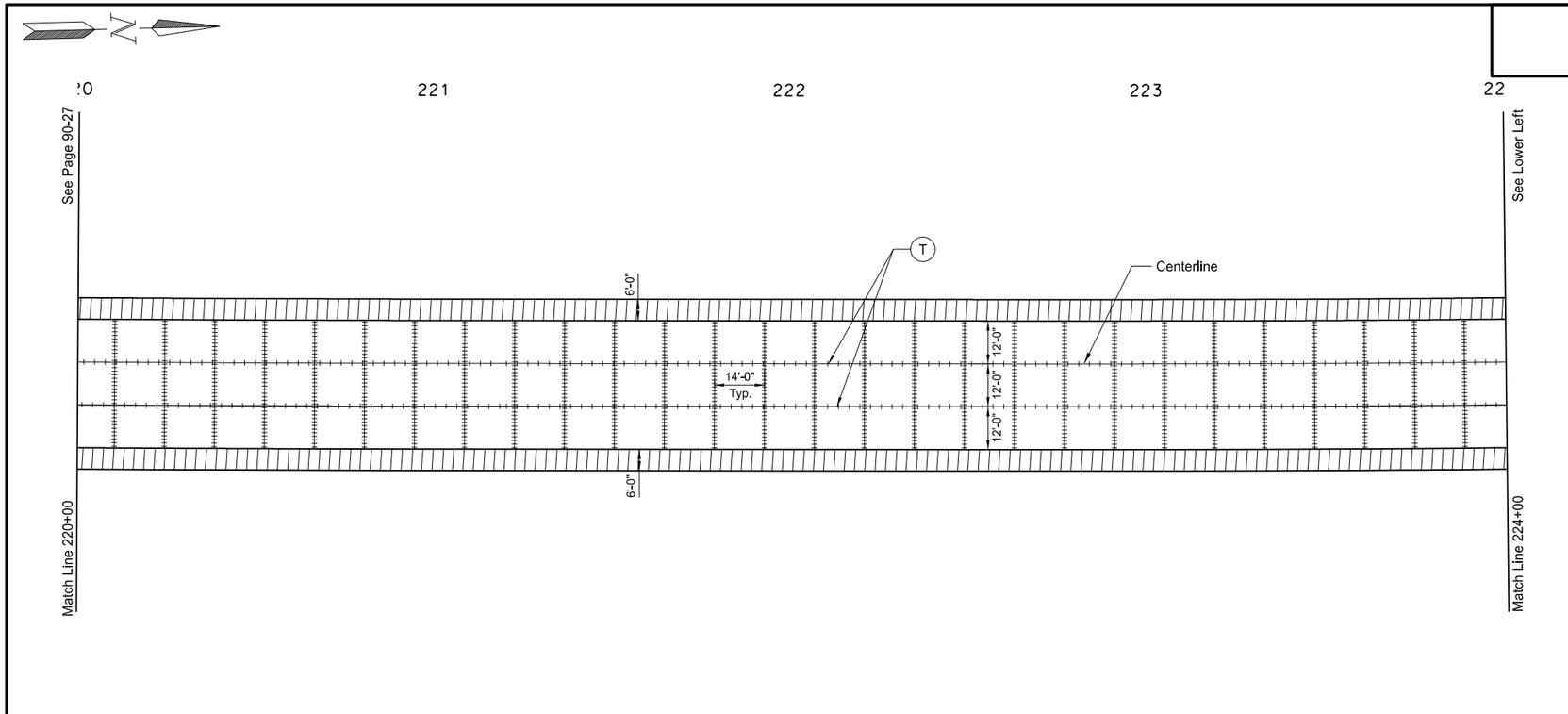

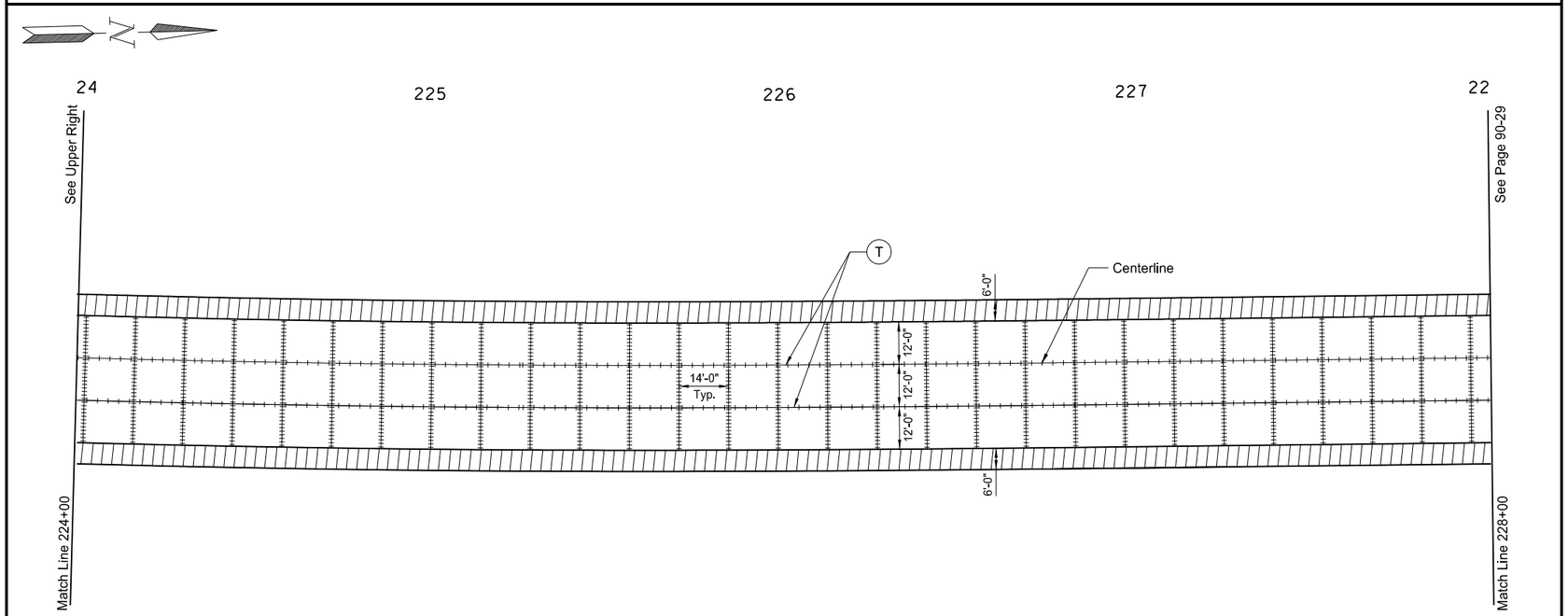

(T) Tied Joint with Hot Pour Seal - See Detail

(S) Sawed Longitudinal Joint

Doweled Joint - Placed in driving lanes only @ Transverse Joint Spacing (Continuous)

This document was originally issued and sealed by William Doerr, Registration Number PE- 7113, on 12/04/05 and the original document is stored at the North Dakota Department of Transportation

Paving Joint Layouts

ND 58

Jct 200 to Jct 1804

STATE	PROJECT NO.	SECTION NO.	SHEET NO.
ND	SOIB-7-058(013)000	90	29

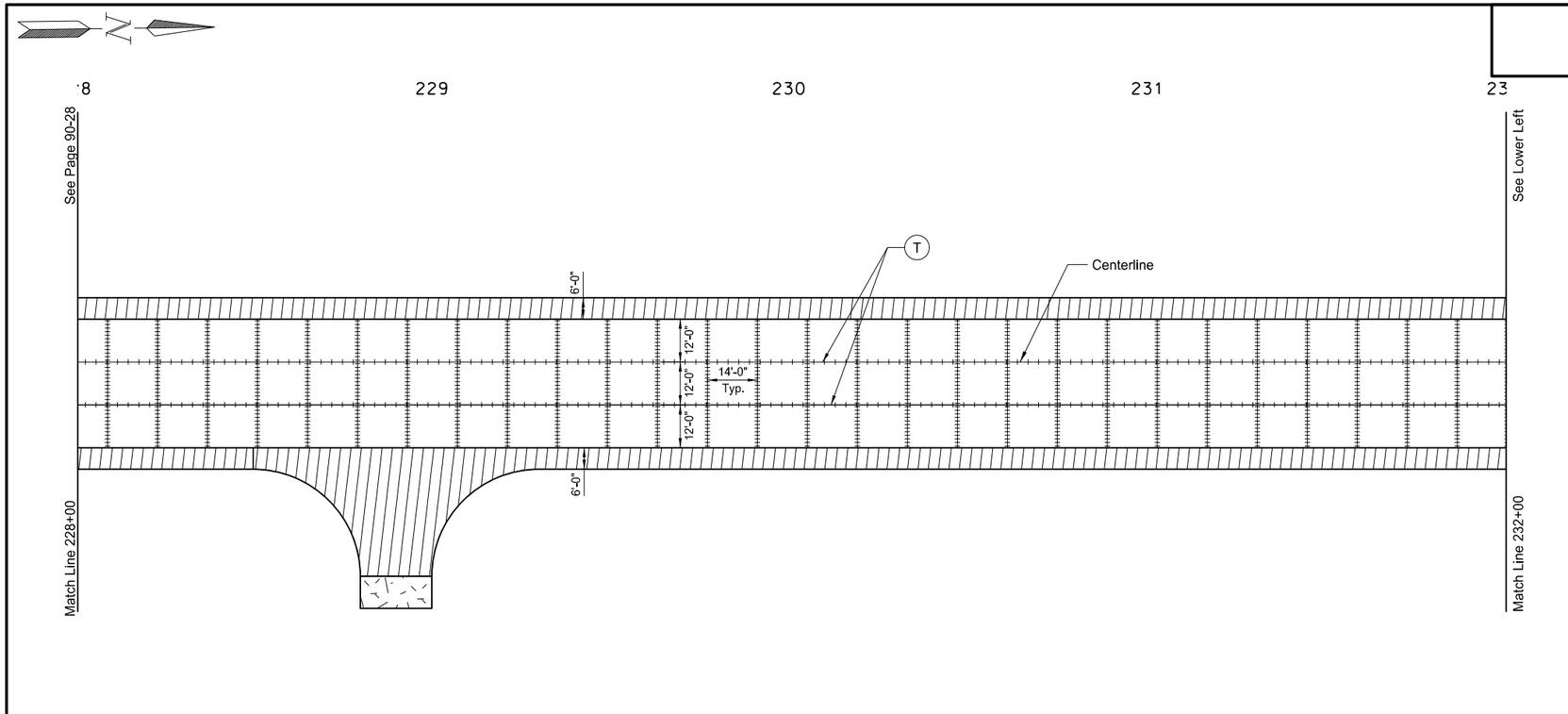

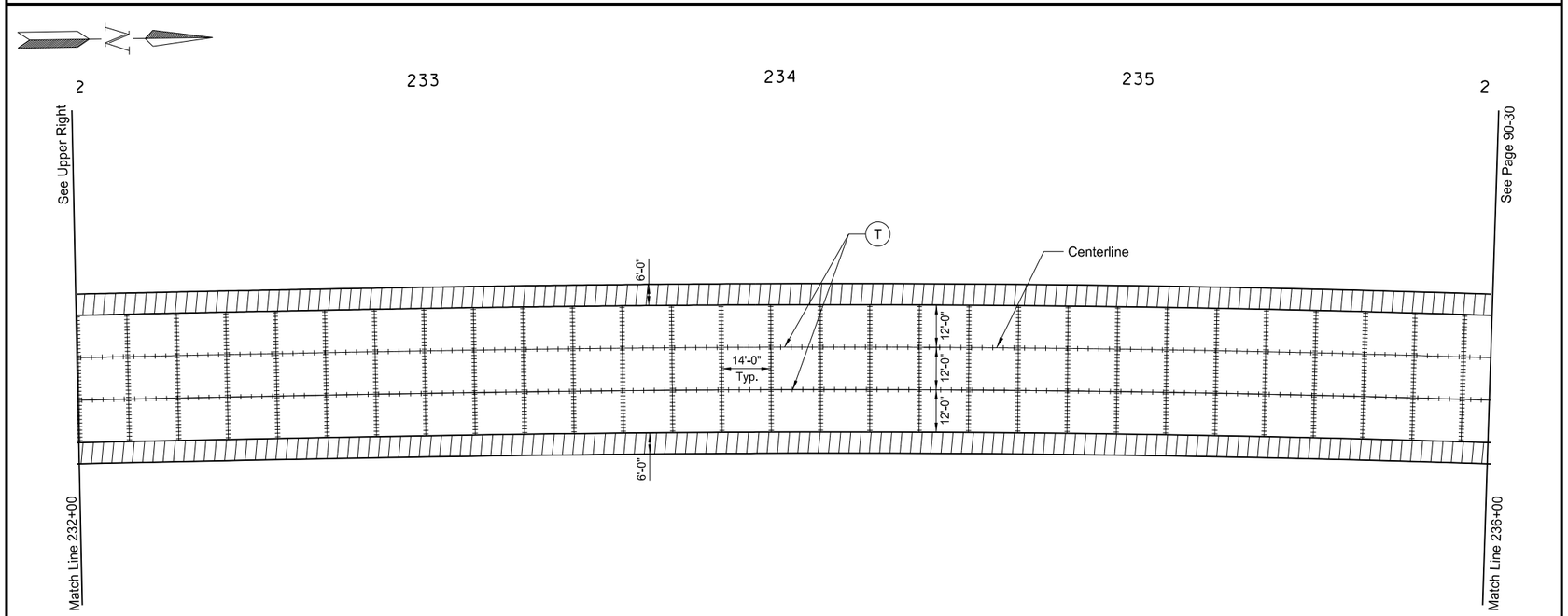

(T) Tied Joint with Hot Pour Seal - See Detail

(S) Sawed Longitudinal Joint

Doweled Joint - Placed in driving lanes only @ Transverse Joint Spacing (Continuous)

This document was originally issued and sealed by William Doerr, Registration Number PE- 7113, on 12/04/05 and the original document is stored at the North Dakota Department of Transportation

Paving Joint Layouts

ND 58

Jct 200 to Jct 1804

STATE	PROJECT NO.	SECTION NO.	SHEET NO.
ND	SOIB-7-058(013)000	90	30

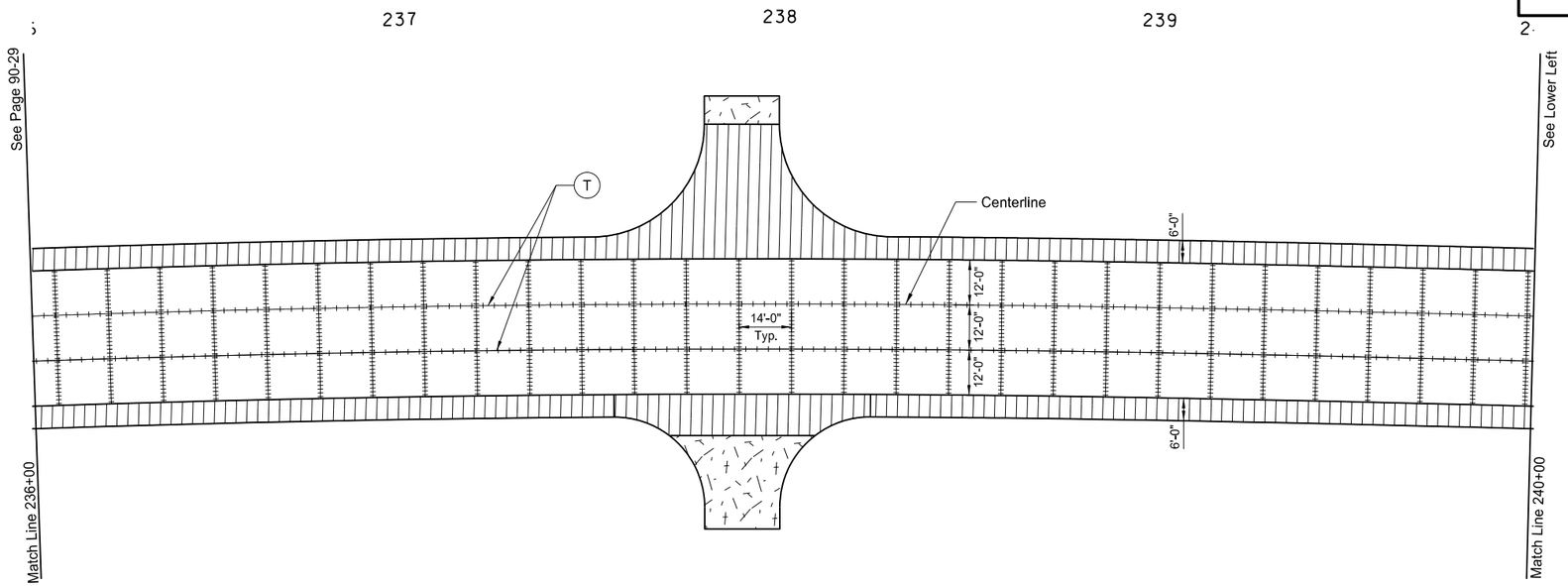

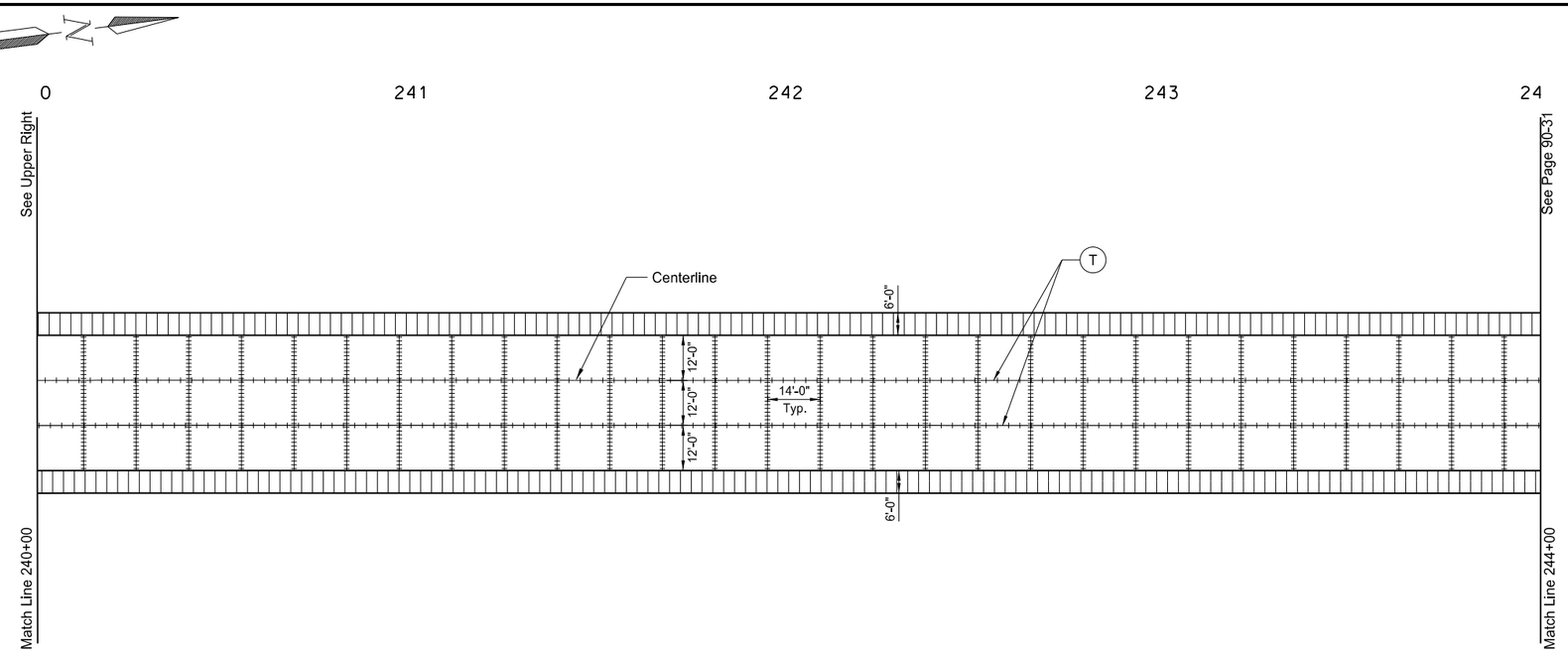

(T) Tied Joint with Hot Pour Seal - See Detail

(S) Sawed Longitudinal Joint

Doweled Joint - Placed in driving lanes only @ Transverse Joint Spacing (Continuous)

This document was originally issued and sealed by William Doerr, Registration Number PE- 7113, on 12/04/05 and the original document is stored at the North Dakota Department of Transportation

Paving Joint Layouts

ND 58

Jct 200 to Jct 1804

STATE	PROJECT NO.	SECTION NO.	SHEET NO.
ND	SOIB-7-058(013)000	90	31

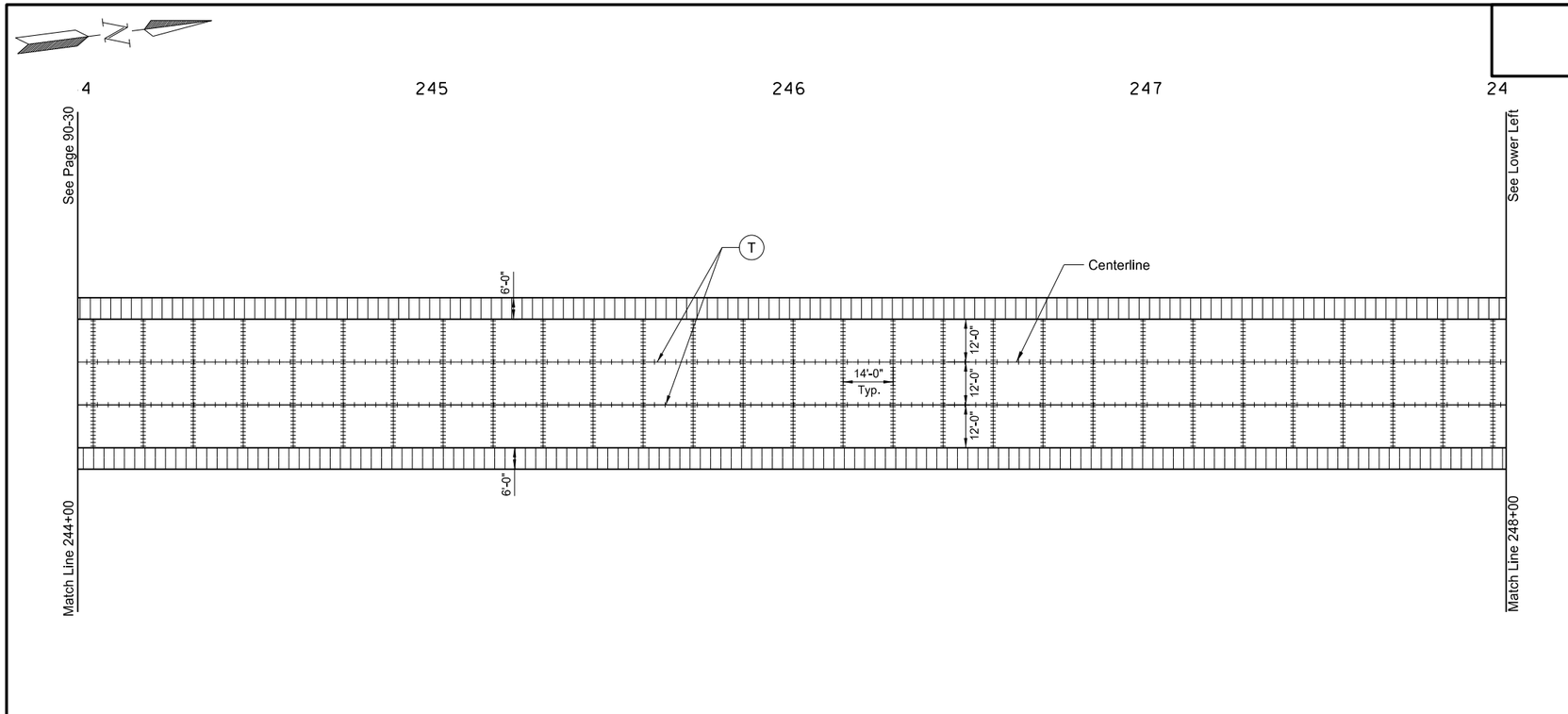

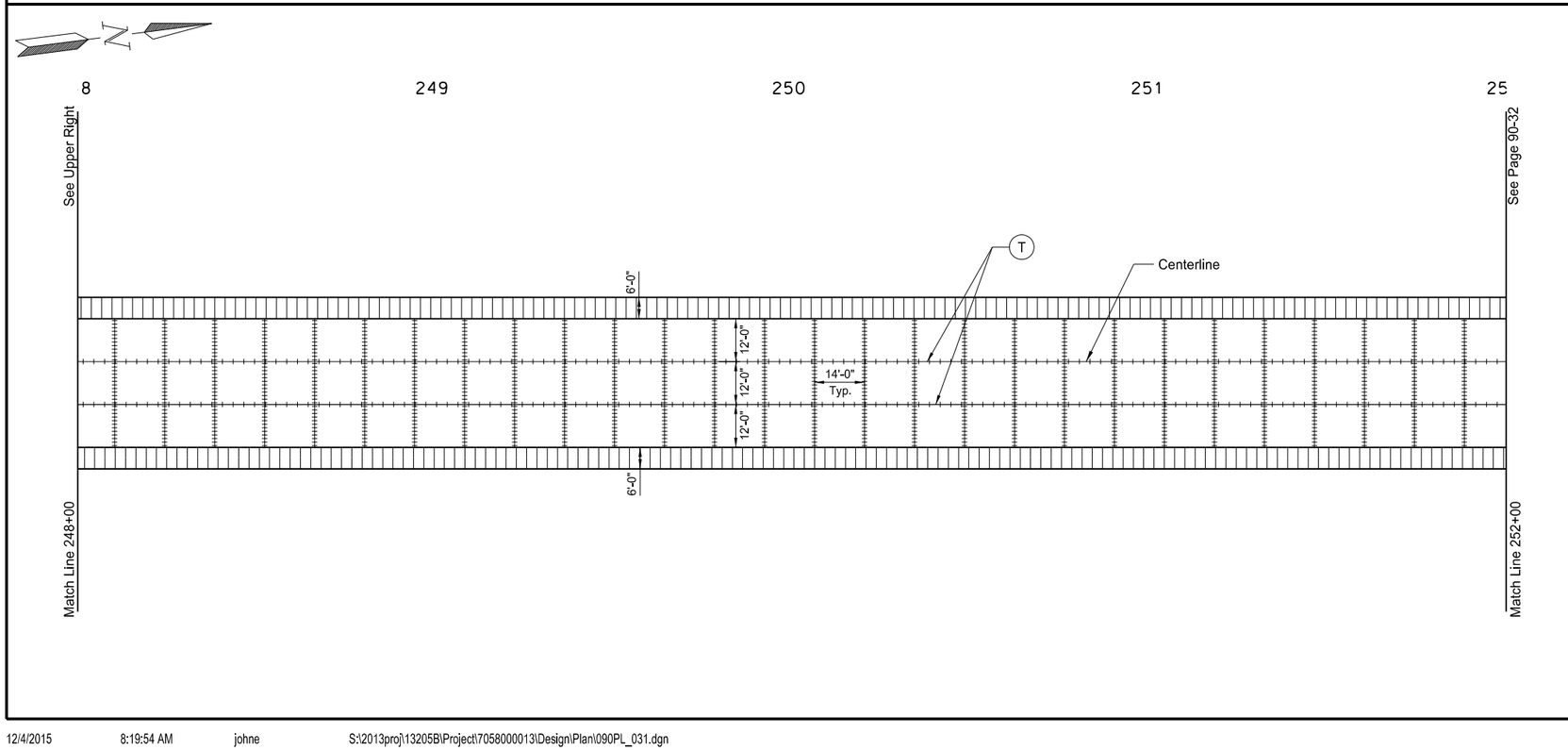

(T) Tied Joint with Hot Pour Seal - See Detail

(S) Sawed Longitudinal Joint

Doweled Joint - Placed in driving lanes only @ Transverse Joint Spacing (Continuous)

This document was originally issued and sealed by William Doerr, Registration Number PE- 7113, on 12/04/05 and the original document is stored at the North Dakota Department of Transportation

Paving Joint Layouts

ND 58

Jct 200 to Jct 1804

STATE	PROJECT NO.	SECTION NO.	SHEET NO.
ND	SOIB-7-058(013)000	90	32

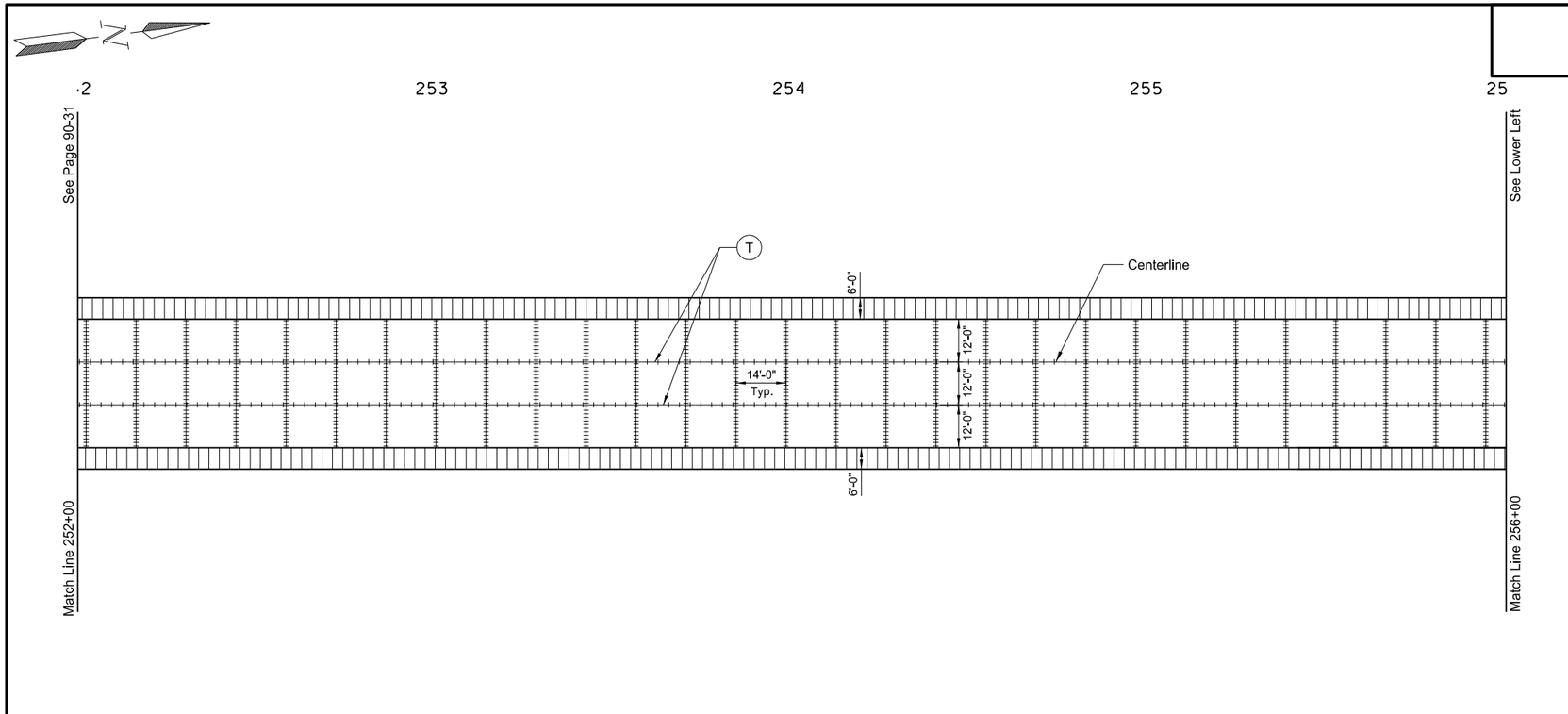

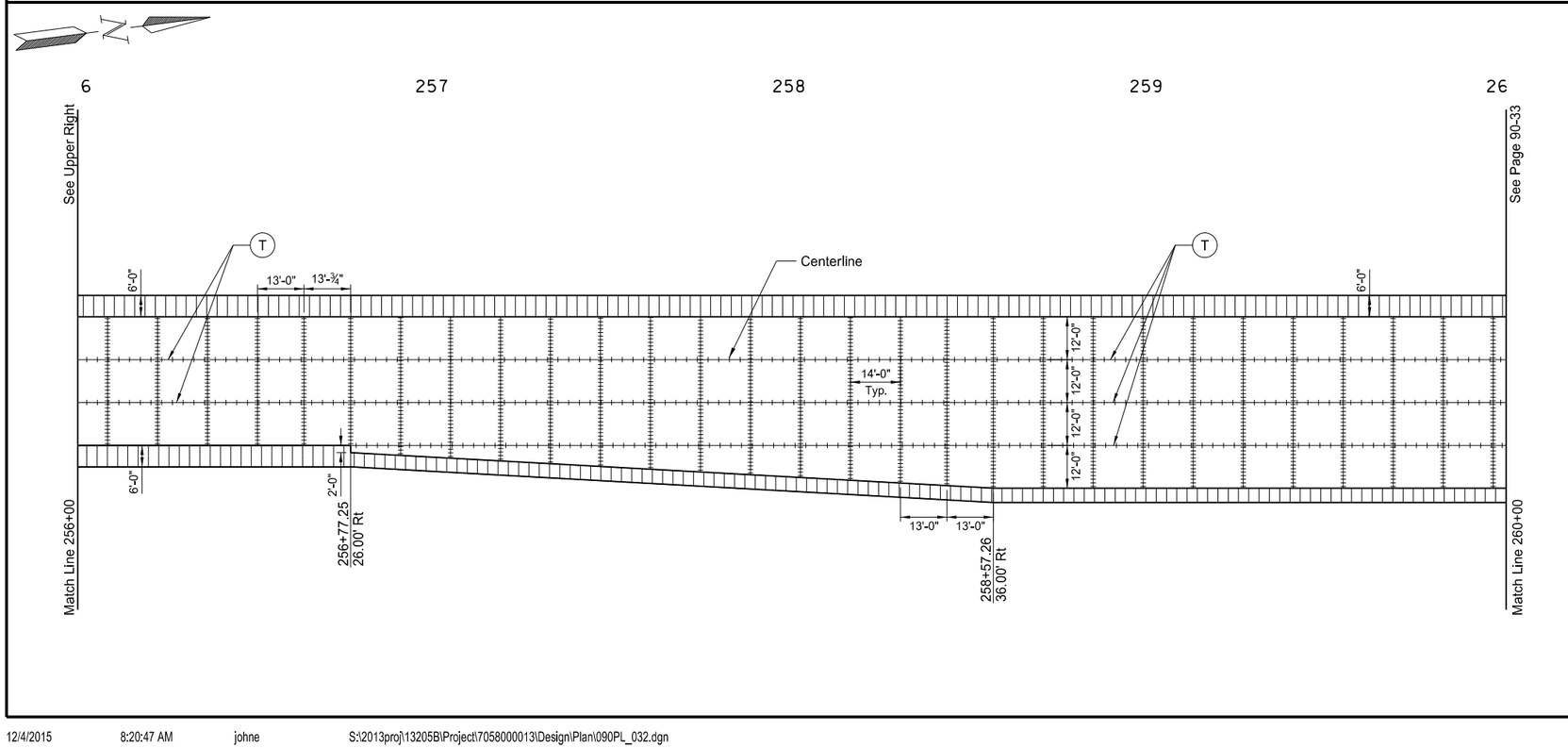

(T) Tied Joint with Hot Pour Seal - See Detail

(S) Sawed Longitudinal Joint

Doweled Joint - Placed in driving lanes only @ Transverse Joint Spacing (Continuous)

This document was originally issued and sealed by William Doerr, Registration Number PE- 7113, on 12/04/05 and the original document is stored at the North Dakota Department of Transportation

Paving Joint Layouts

ND 58

Jct 200 to Jct 1804

STATE	PROJECT NO.	SECTION NO.	SHEET NO.
ND	SOIB-7-058(013)000	90	33

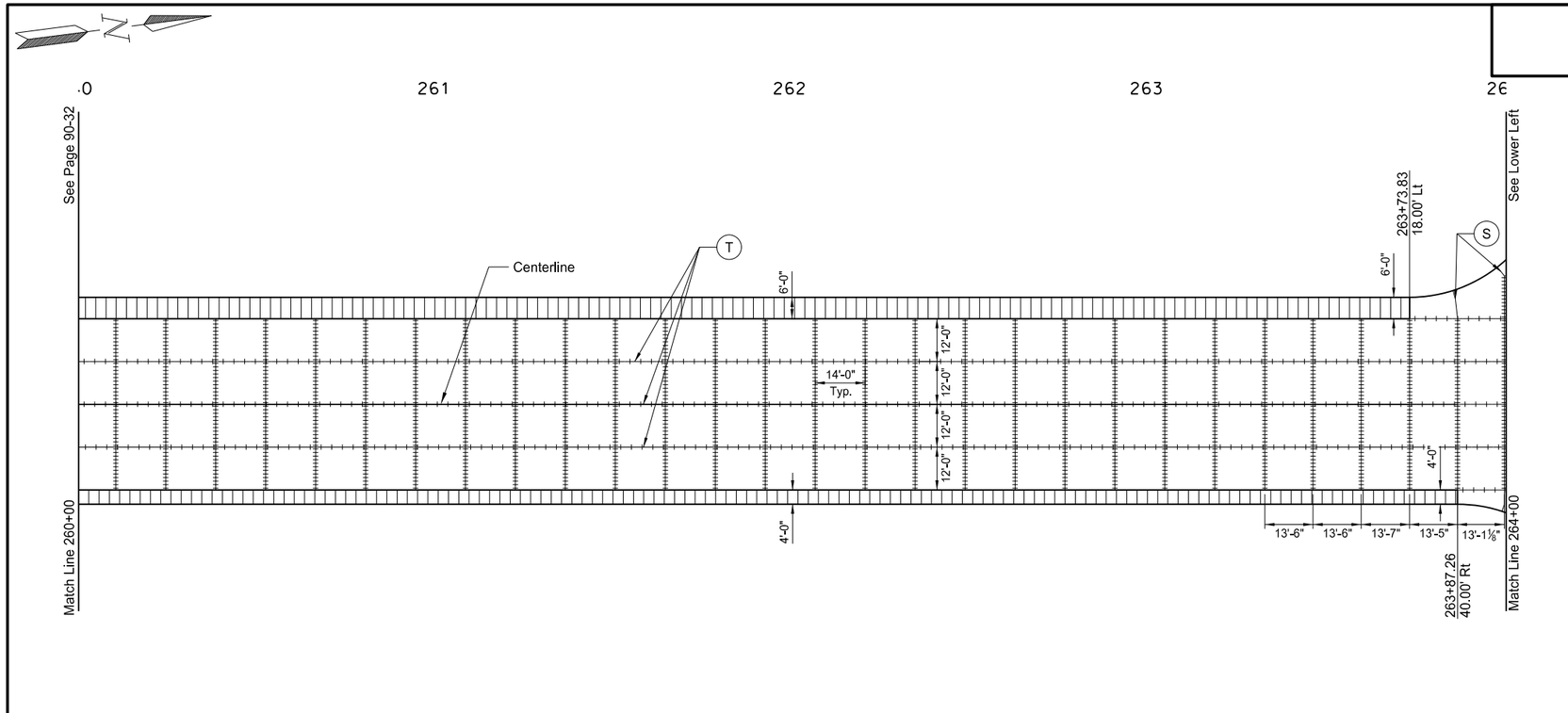

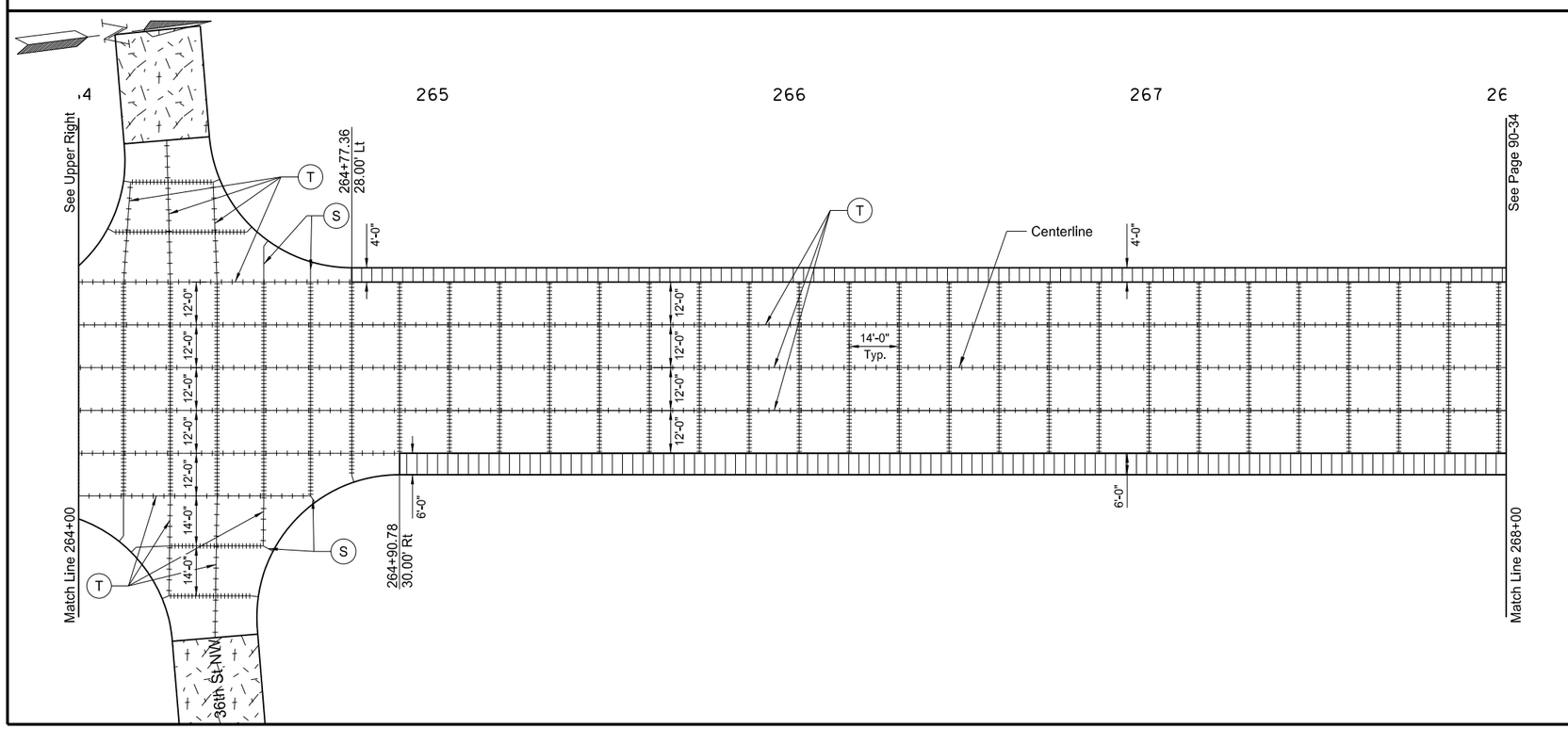

T Tied Joint with Hot Pour Seal - See Detail

S Sawed Longitudinal Joint

Doweled Joint - Placed in driving lanes only @ Transverse Joint Spacing (Continuous)

This document was originally issued and sealed by William Doerr, Registration Number PE- 7113, on 12/04/05 and the original document is stored at the North Dakota Department of Transportation

Paving Joint Layouts

ND 58

Jct 200 to Jct 1804

STATE	PROJECT NO.	SECTION NO.	SHEET NO.
ND	SOIB-7-058(013)000	90	34

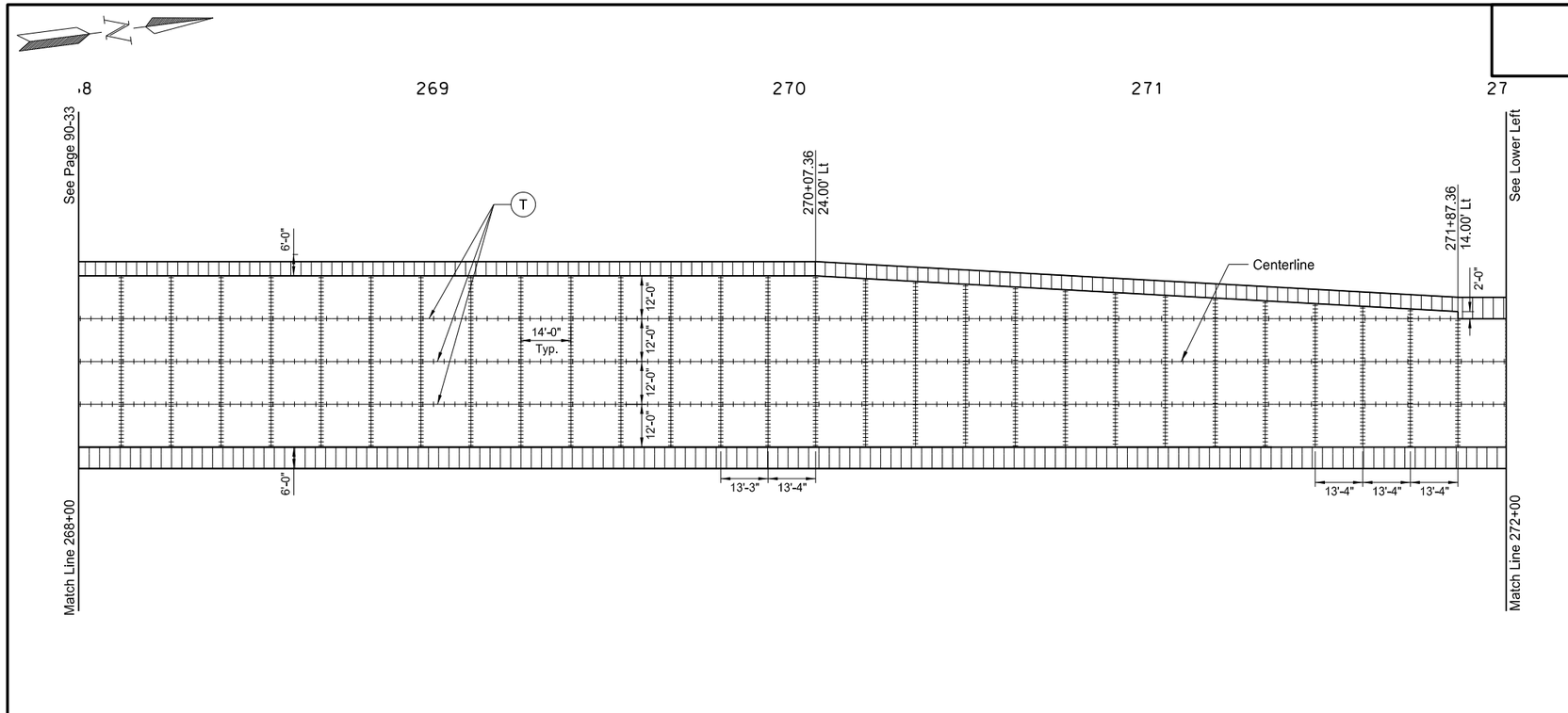

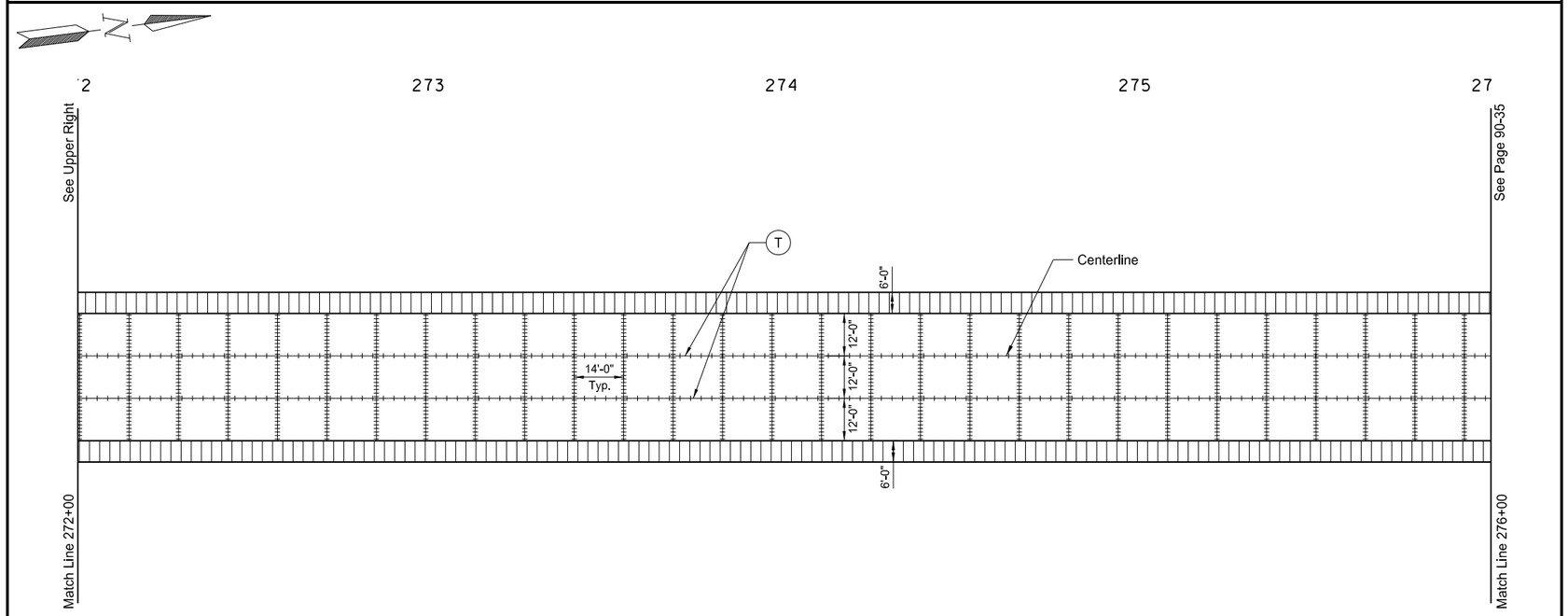

(T) Tied Joint with Hot Pour Seal - See Detail

(S) Sawed Longitudinal Joint

Doweled Joint - Placed in driving lanes only @ Transverse Joint Spacing (Continuous)

This document was originally issued and sealed by William Doerr, Registration Number PE- 7113, on 12/04/05 and the original document is stored at the North Dakota Department of Transportation

Paving Joint Layouts

ND 58

Jct 200 to Jct 1804

STATE	PROJECT NO.	SECTION NO.	SHEET NO.
ND	SOIB-7-058(013)000	90	35

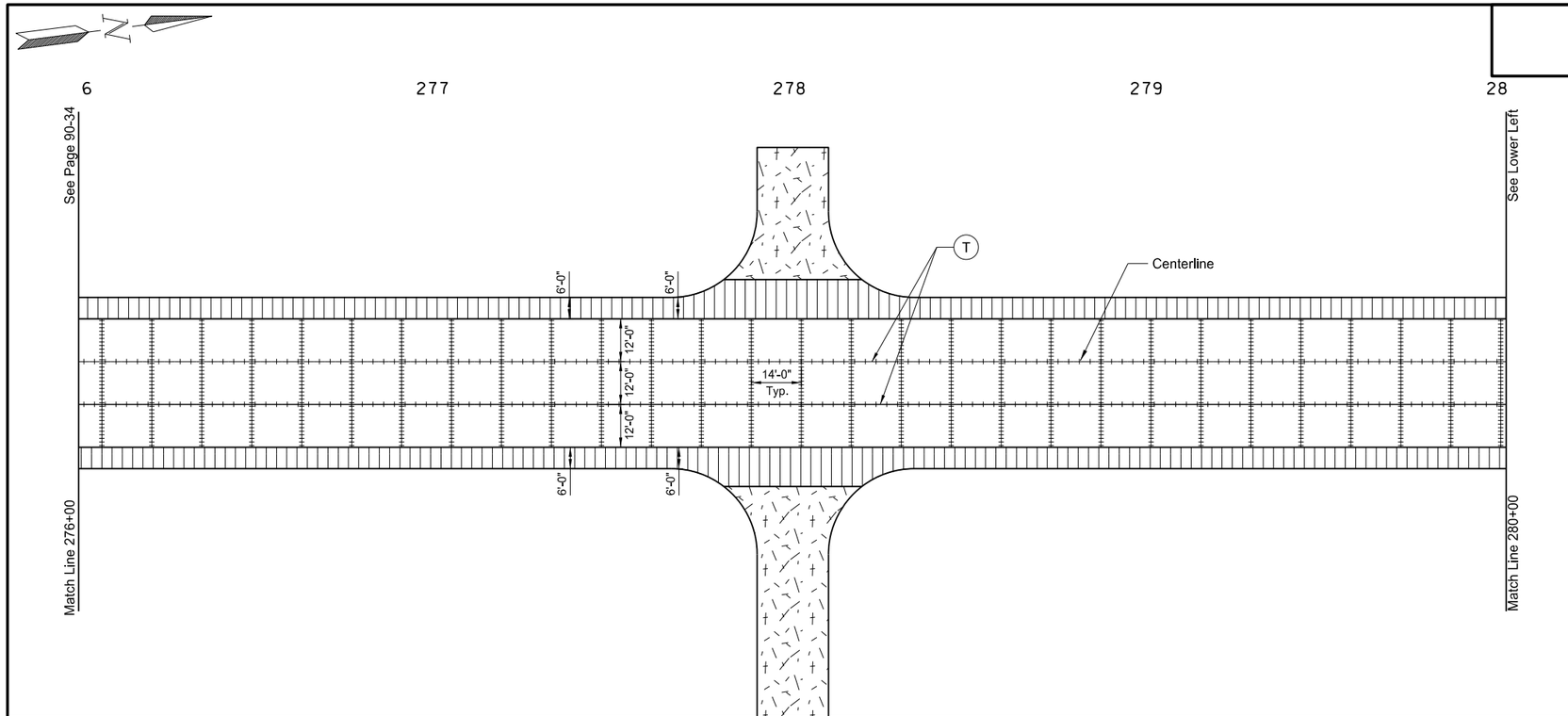

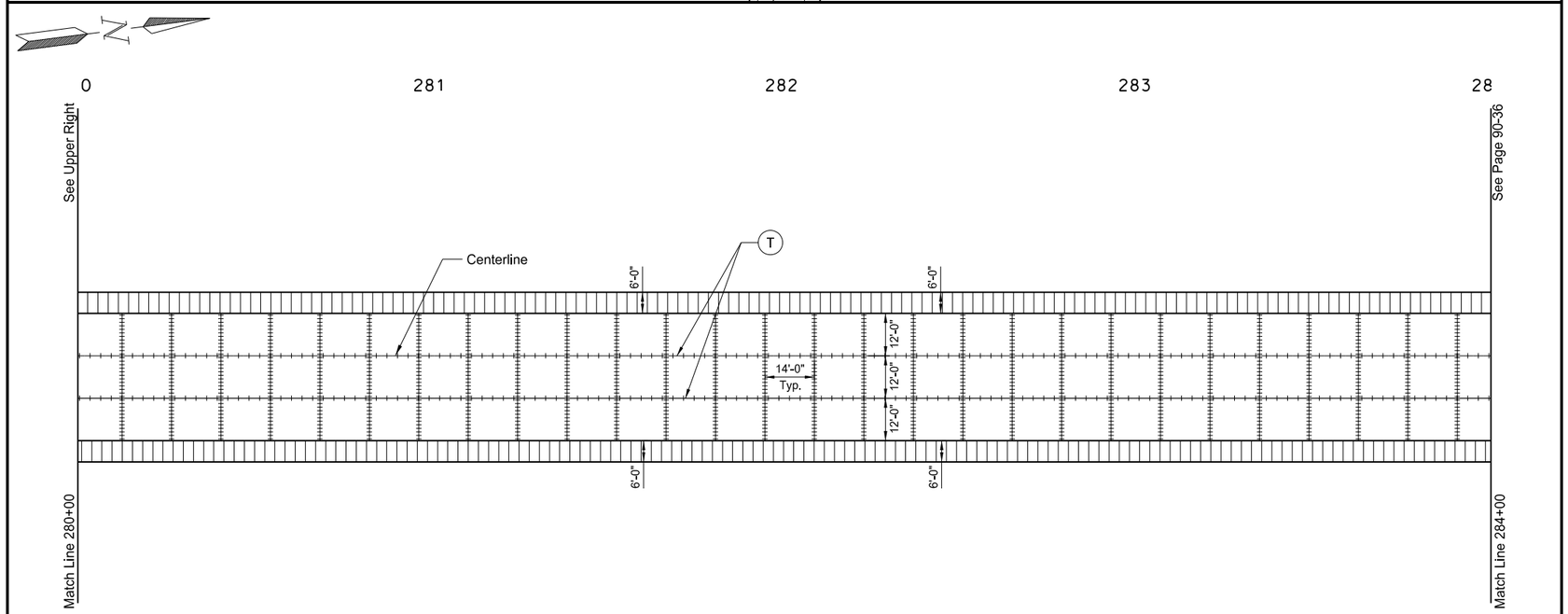

(T) Tied Joint with Hot Pour Seal - See Detail

(S) Sawed Longitudinal Joint

Doweled Joint - Placed in driving lanes only @ Transverse Joint Spacing (Continuous)

This document was originally issued and sealed by William Doerr, Registration Number PE- 7113, on 12/04/05 and the original document is stored at the North Dakota Department of Transportation

Paving Joint Layouts

ND 58

Jct 200 to Jct 1804

STATE	PROJECT NO.	SECTION NO.	SHEET NO.
ND	SOIB-7-058(013)000	90	36

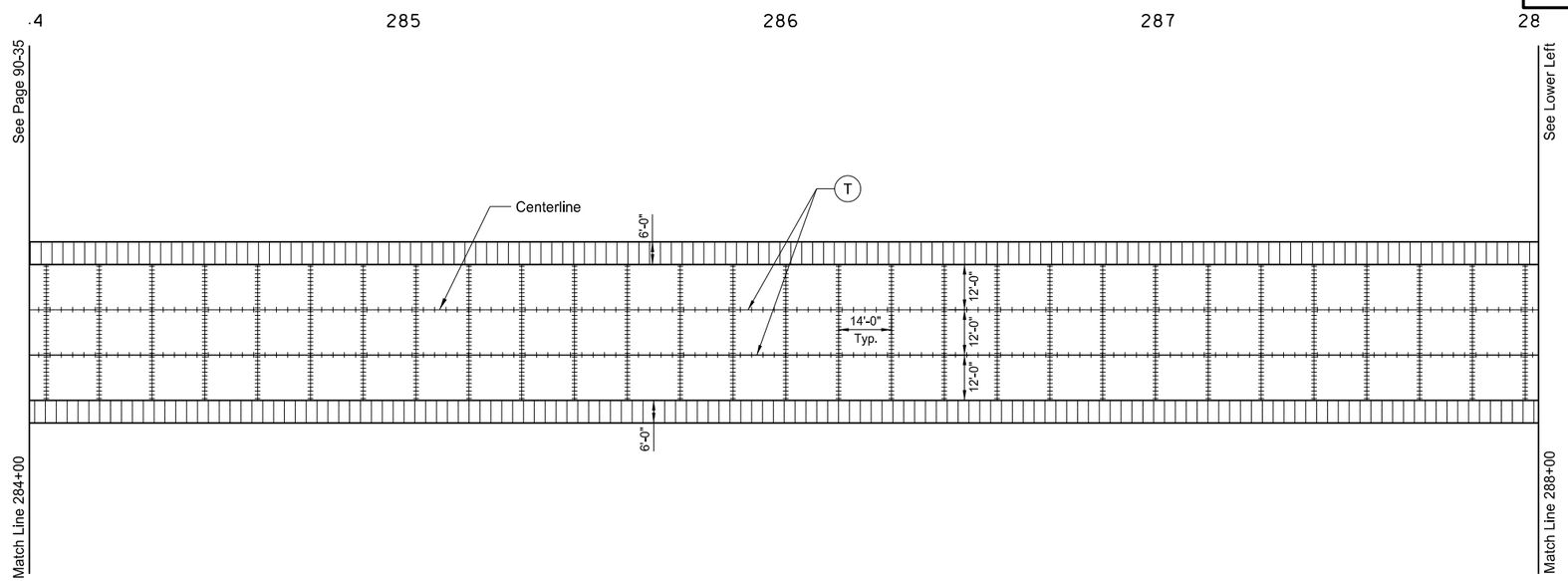

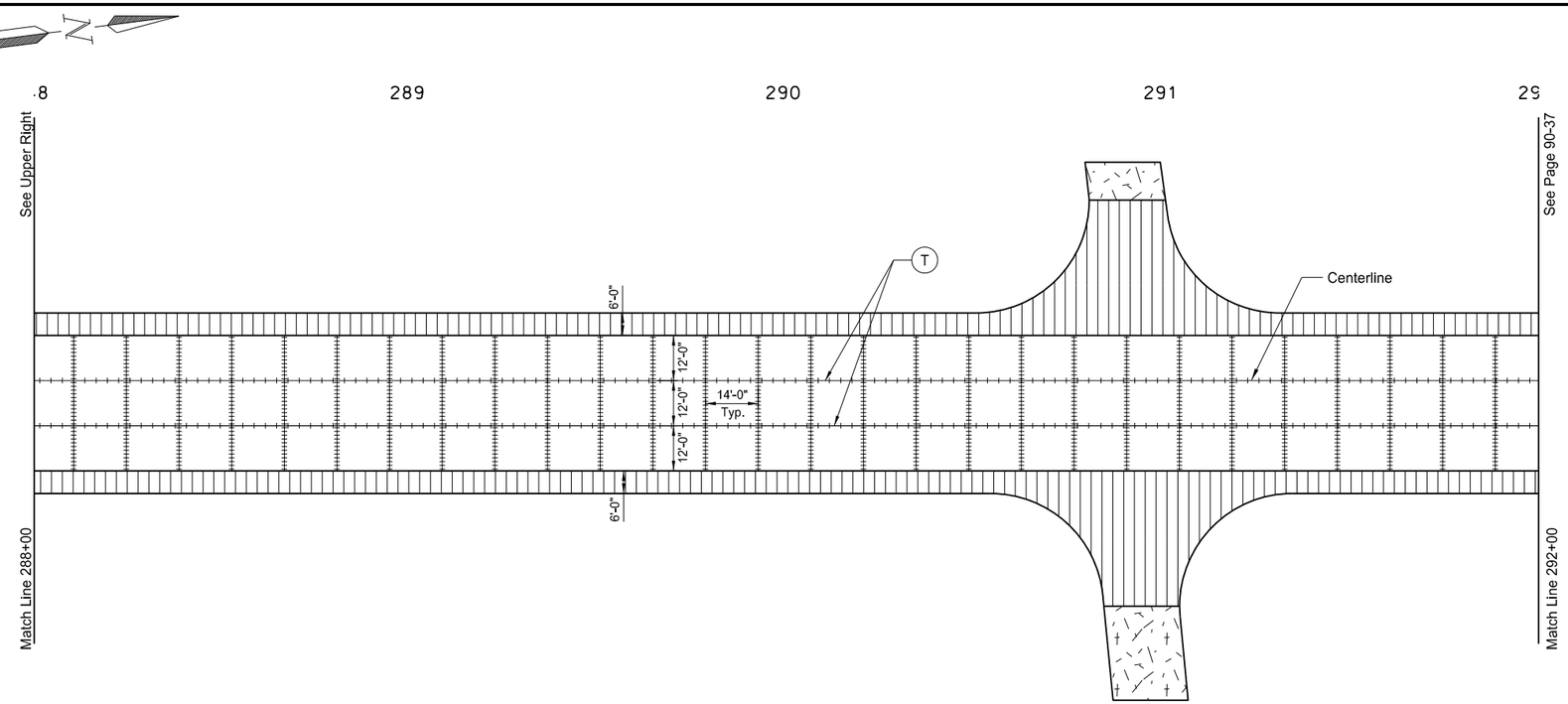

(T) Tied Joint with Hot Pour Seal - See Detail

(S) Sawed Longitudinal Joint

Doweled Joint - Placed in driving lanes only @ Transverse Joint Spacing (Continuous)

This document was originally issued and sealed by William Doerr, Registration Number PE- 7113, on 12/04/05 and the original document is stored at the North Dakota Department of Transportation

Paving Joint Layouts

ND 58

Jct 200 to Jct 1804

STATE	PROJECT NO.	SECTION NO.	SHEET NO.
ND	SOIB-7-058(013)000	90	37

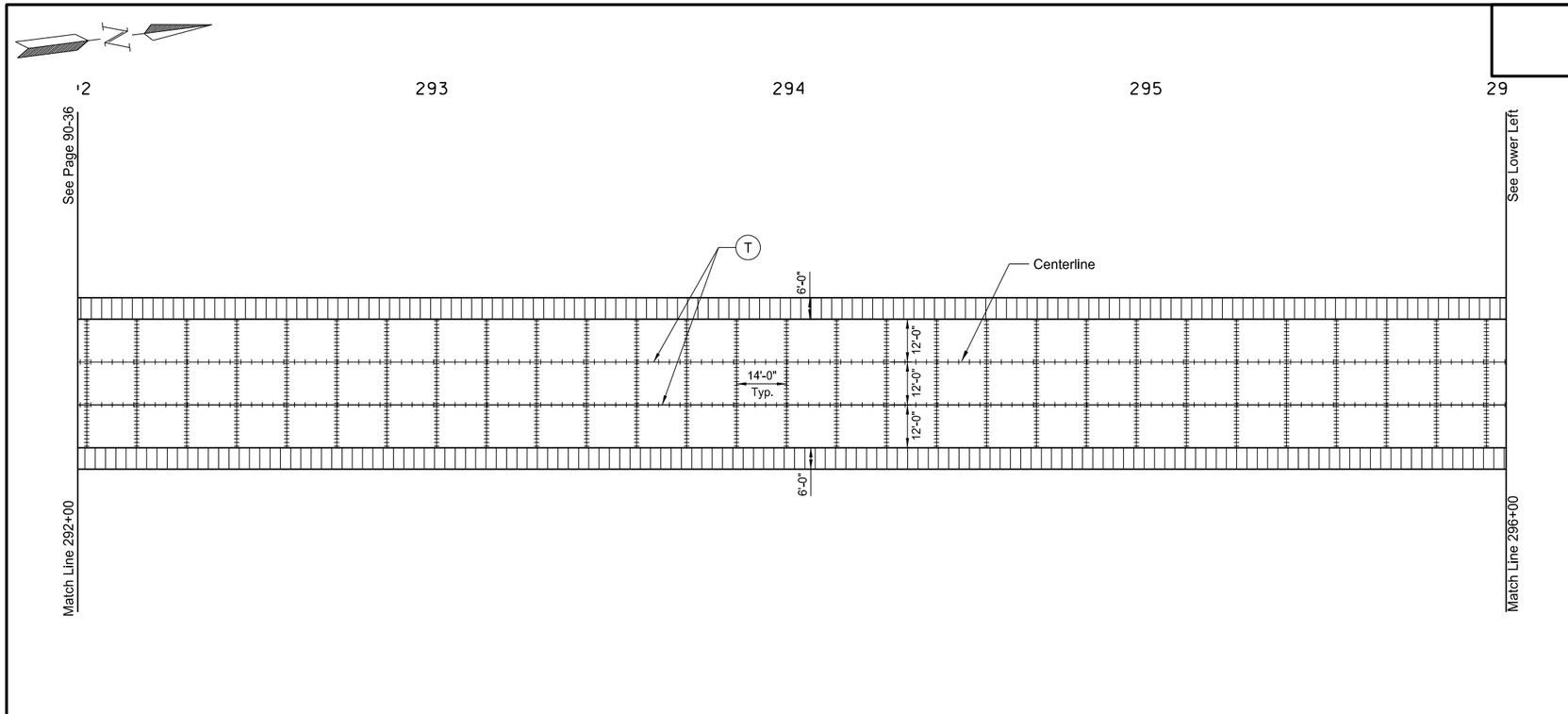

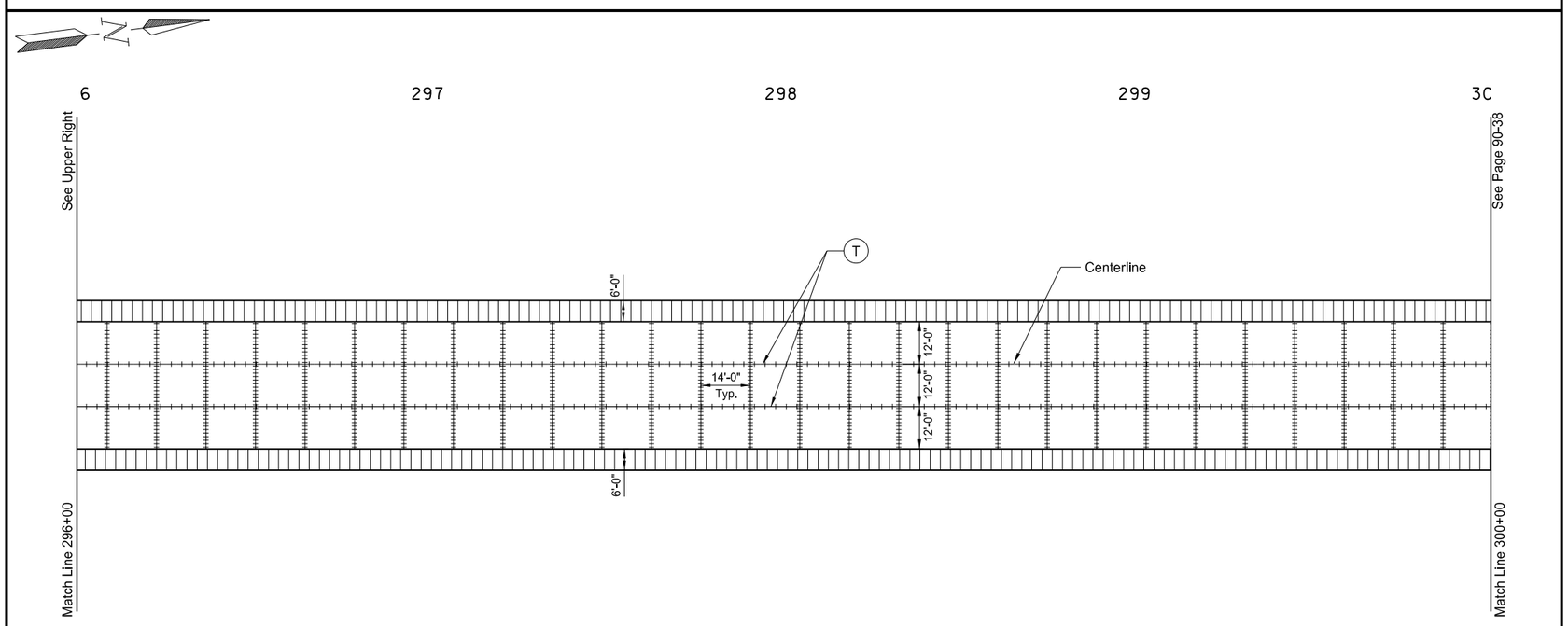

(T) Tied Joint with Hot Pour Seal - See Detail

(S) Sawed Longitudinal Joint

Doweled Joint - Placed in driving lanes only @ Transverse Joint Spacing (Continuous)

This document was originally issued and sealed by William Doerr, Registration Number PE- 7113, on 12/04/05 and the original document is stored at the North Dakota Department of Transportation

Paving Joint Layouts

ND 58

Jct 200 to Jct 1804

STATE	PROJECT NO.	SECTION NO.	SHEET NO.
ND	SOIB-7-058(013)000	90	38

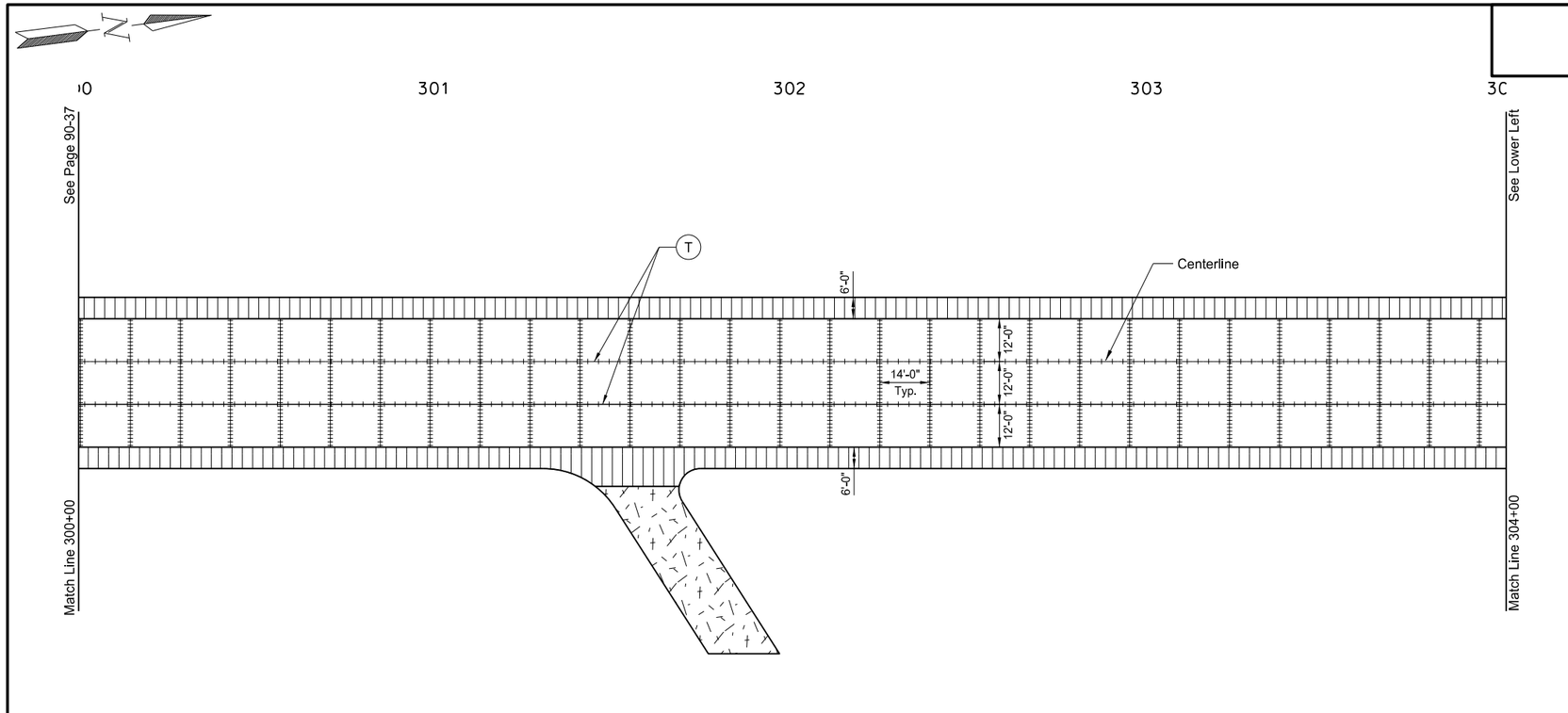

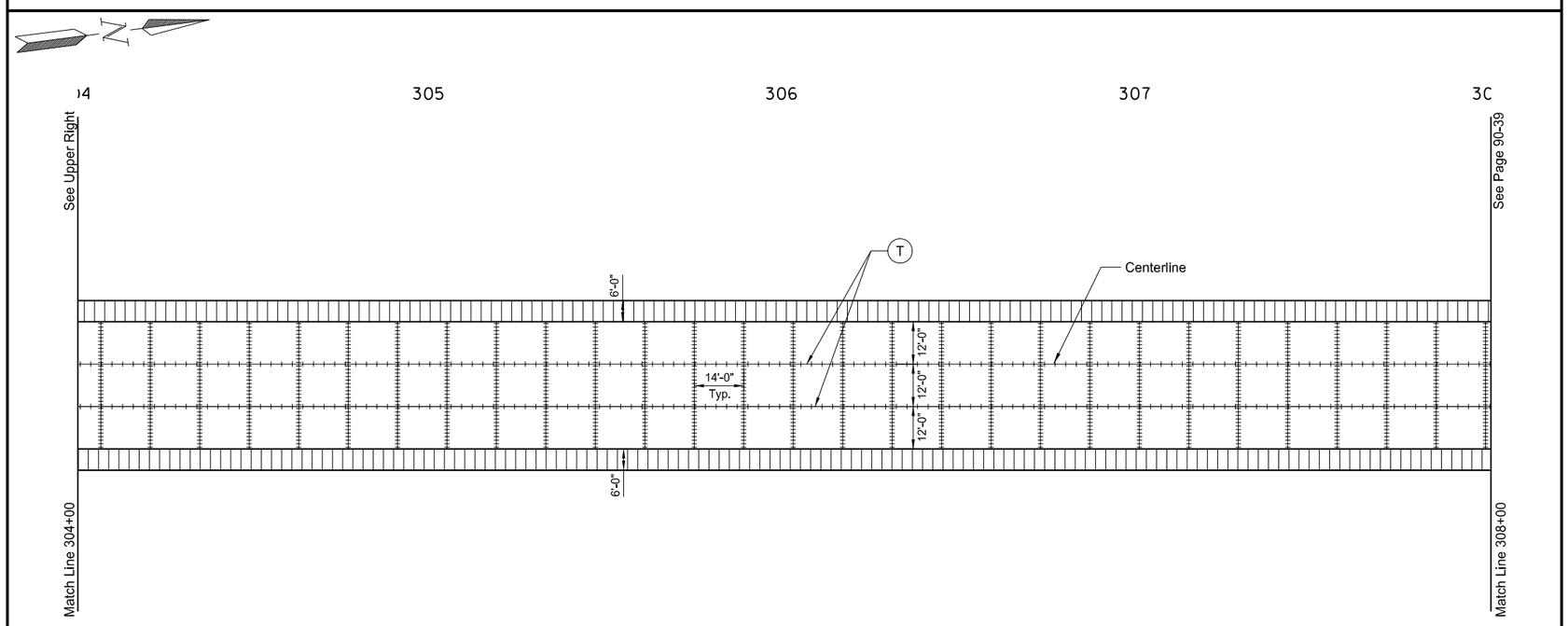

(T) Tied Joint with Hot Pour Seal - See Detail

(S) Sawed Longitudinal Joint

Doweled Joint - Placed in driving lanes only @ Transverse Joint Spacing (Continuous)

This document was originally issued and sealed by William Doerr, Registration Number PE- 7113, on 12/04/05 and the original document is stored at the North Dakota Department of Transportation

Paving Joint Layouts

ND 58

Jct 200 to Jct 1804

STATE	PROJECT NO.	SECTION NO.	SHEET NO.
ND	SOIB-7-058(013)000	90	39

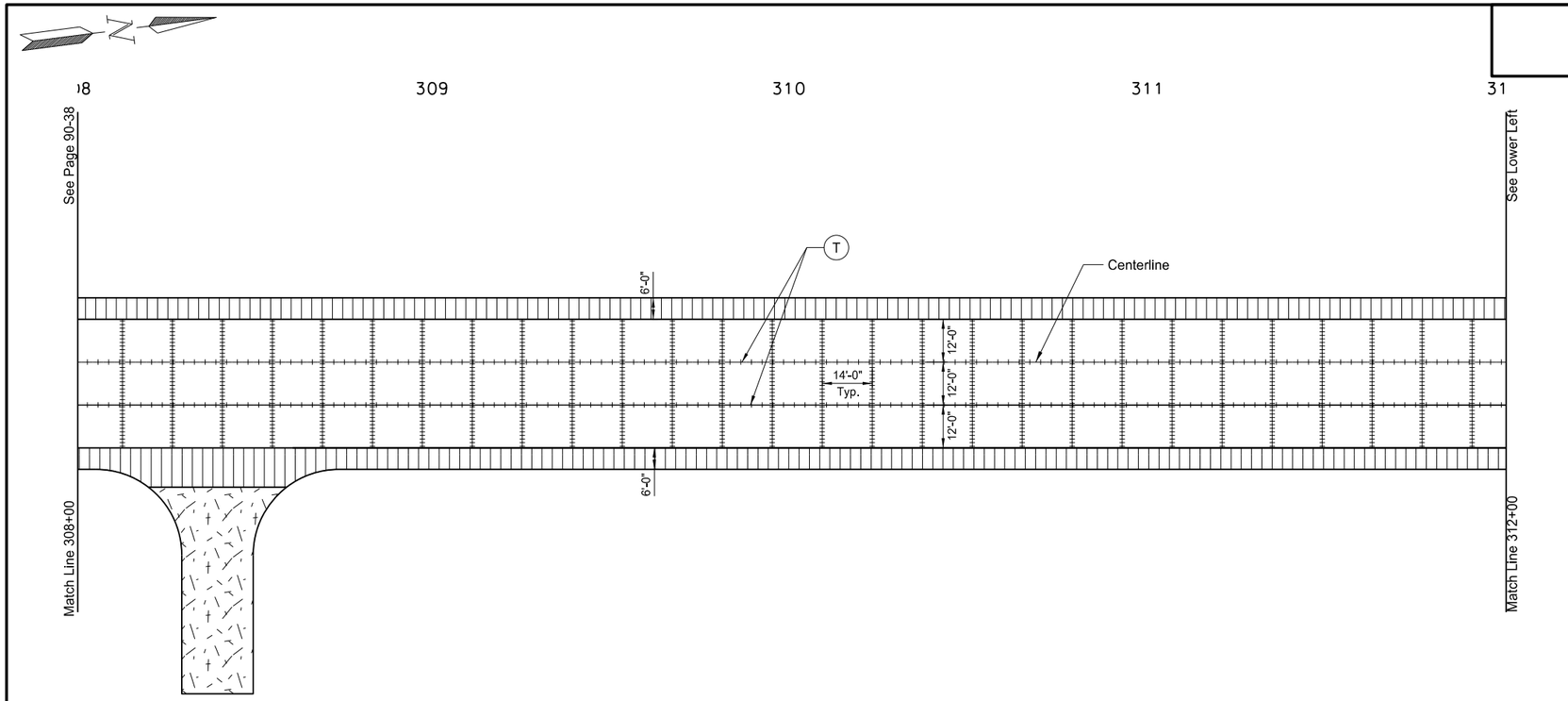

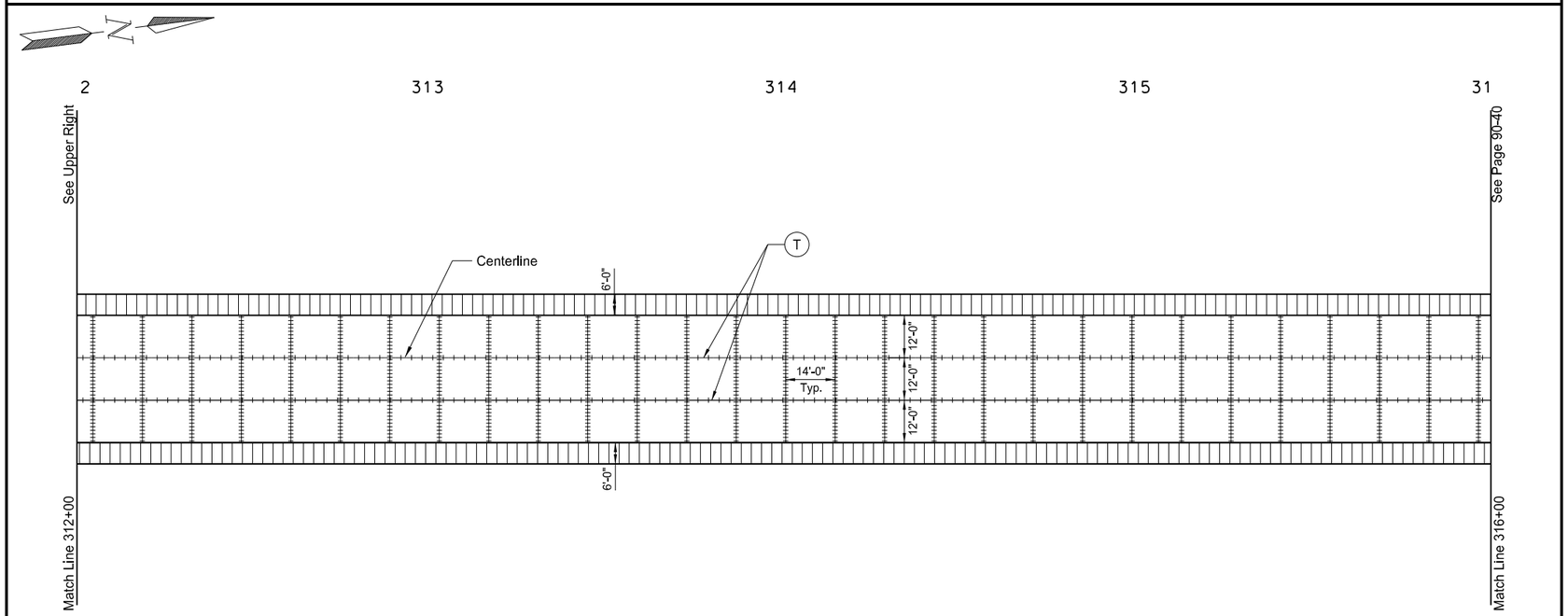

T Tied Joint with Hot Pour Seal - See Detail

S Sawed Longitudinal Joint

Doweled Joint - Placed in driving lanes only @ Transverse Joint Spacing (Continuous)

This document was originally issued and sealed by William Doerr, Registration Number PE- 7113, on 12/04/05 and the original document is stored at the North Dakota Department of Transportation

Paving Joint Layouts

ND 58

Jct 200 to Jct 1804

STATE	PROJECT NO.	SECTION NO.	SHEET NO.
ND	SOIB-7-058(013)000	90	40

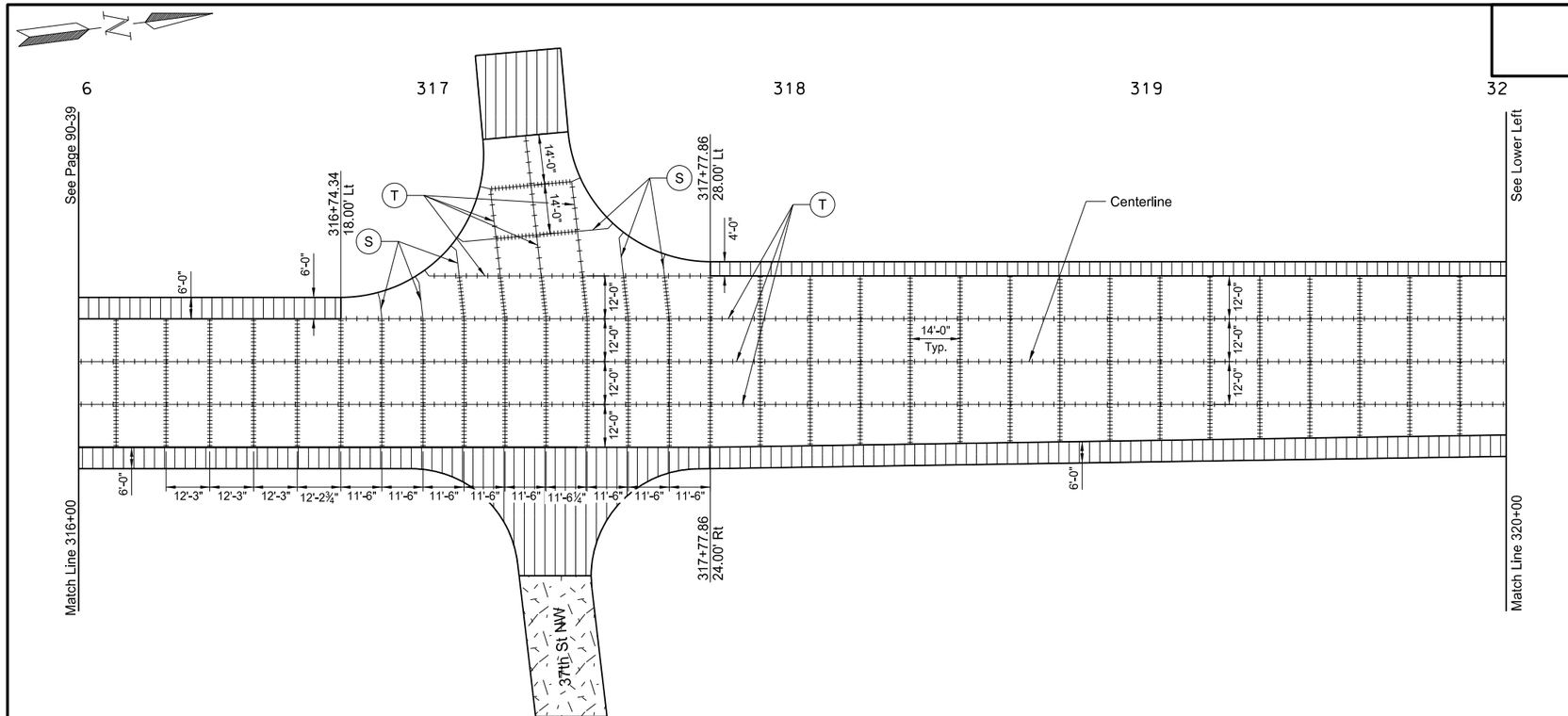

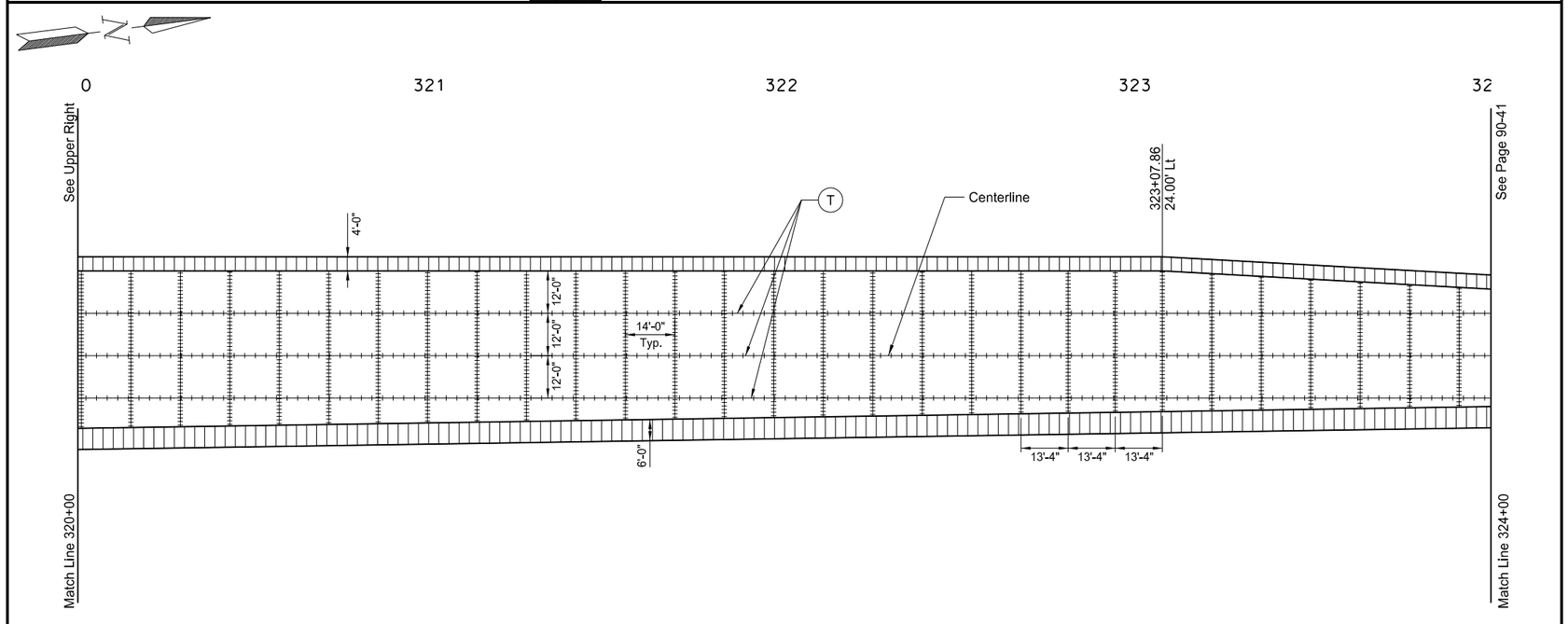

T Tied Joint with Hot Pour Seal - See Detail

S Sawed Longitudinal Joint

Doweled Joint - Placed in driving lanes only @ Transverse Joint Spacing (Continuous)

This document was originally issued and sealed by William Doerr, Registration Number PE- 7113, on 12/04/05 and the original document is stored at the North Dakota Department of Transportation

Paving Joint Layouts

ND 58

Jct 200 to Jct 1804

STATE	PROJECT NO.	SECTION NO.	SHEET NO.
ND	SOIB-7-058(013)000	90	41

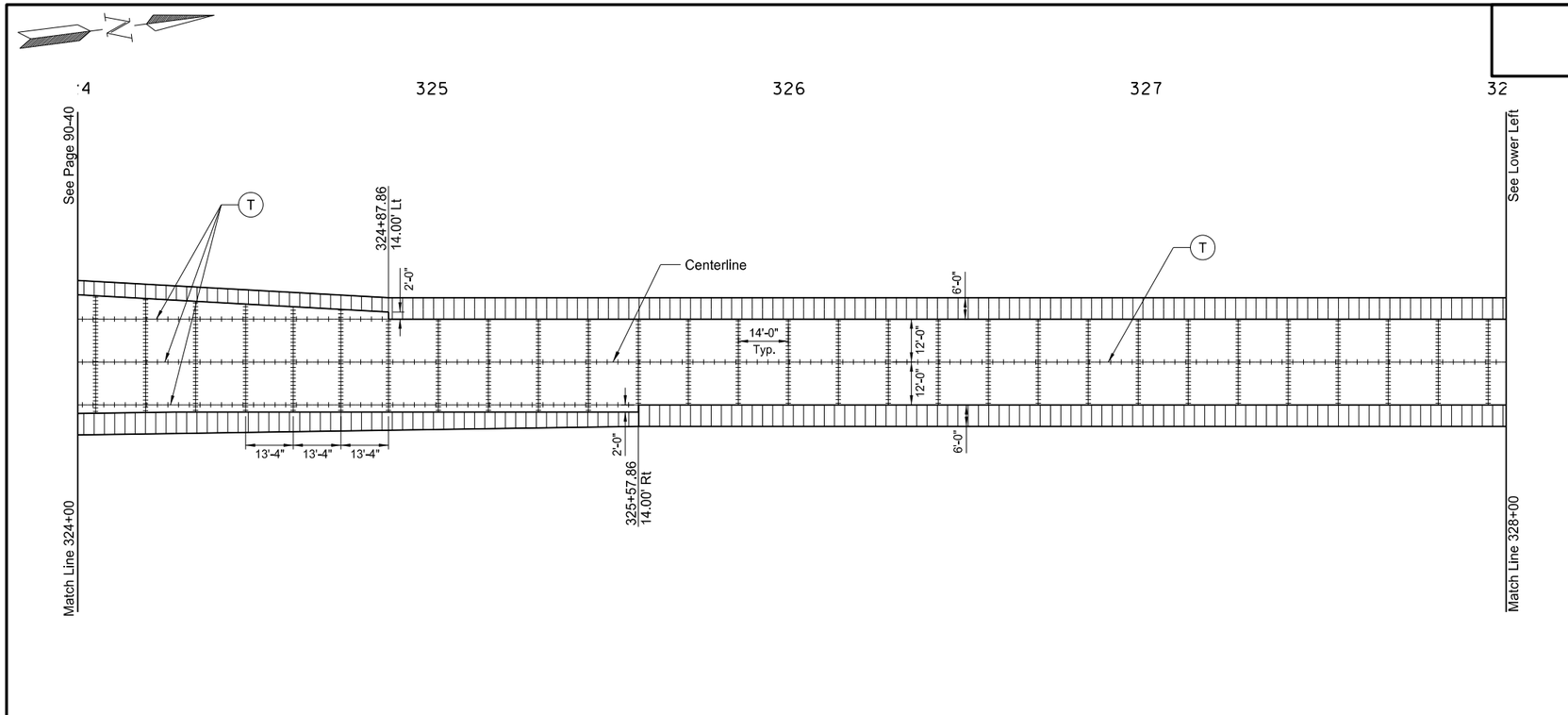

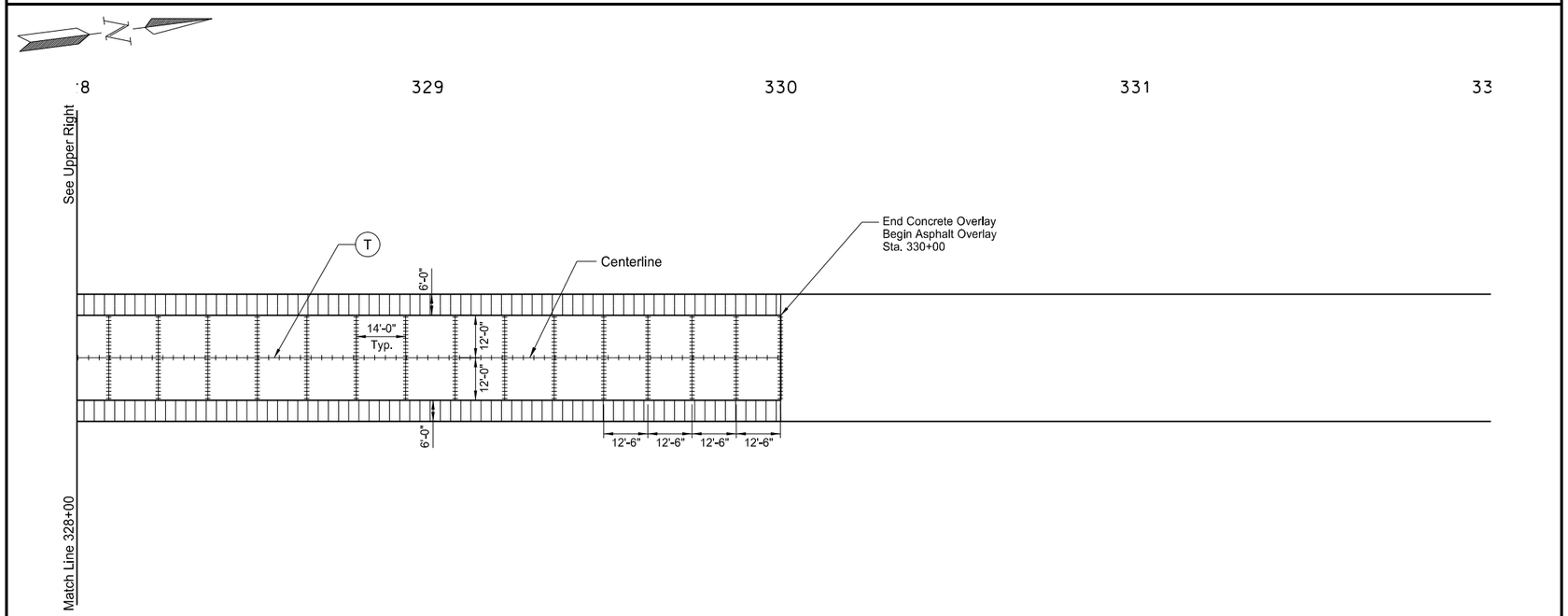

(T) Tied Joint with Hot Pour Seal - See Detail

(S) Sawed Longitudinal Joint

Doweled Joint - Placed in driving lanes only @ Transverse Joint Spacing (Continuous)

This document was originally issued and sealed by William Doerr, Registration Number PE- 7113, on 12/04/05 and the original document is stored at the North Dakota Department of Transportation

Paving Joint Layouts

ND 58

Jct 200 to Jct 1804

STATE	PROJECT NO.	SECTION NO.	SHEET NO.
ND	SOIB-7-058(013)000	100	1

SIGN NUMBER	SIGN SIZE	DESCRIPTION	AMOUNT REQUIRED	UNITS PER AMOUNT	UNITS SUB TOTAL
D3-36	36"x6"	STREET NAME SIGN (Sign and installation only)		6	
G20-1-60	**60"x24"**	**ROAD WORK NEXT __ MILES**	**2**	**34**	**68**
G20-1b-60	60"x24"	WORK IN PROGRESS/ NO WORK IN PROGRESS (Sign and installation only)		26	
G20-2-48	**48"x24"**	**END ROAD WORK**	**2**	**19**	**38**
G20-4-36	**36"x18"**	**PILOT CAR FOLLOW ME (Mounted to back of pilot car)**	**1**	**18**	**18**
G20-10-108	**108"x48"**	**CONTRACTOR SIGN**	**2**	**64**	**128**
G20-50a-72	**72"x36"**	**ROAD WORK NEXT __ MILES RT & LT ARROWS**	**14**	**37**	**518**
G20-52a-72	**72"x24"**	**ROAD WORK NEXT __ MILES RT or LT ARROW**	**3**	**30**	**90**
G20-55-96	**96"x48"**	**SPEED LIMIT ENFORCED - MINIMUM FEE $80 WHEN WORKERS PRESENT**	**2**	**59**	**118**
M1-1-36	36"x36"	INTERSTATE ROUTE MARKER (Post and installation only)		10	
M1-4-24	24"x24"	U.S. ROUTE MARKER (Post and installation only)		10	
M1-5-24	24"x24"	STATE ROUTE MARKER (Post and installation only)		10	
M3-1-24	24"x12"	NORTH (Mounted on route marker post)		7	
M3-2-24	24"x12"	EAST (Mounted on route marker post)		7	
M3-3-24	24"x12"	SOUTH (Mounted on route marker post)		7	
M3-4-24	24"x12"	WEST (Mounted on route marker post)		7	
M4-8-24	24"x12"	DETOUR (Mounted on route marker post)		7	
M4-9-30	30"x24"	DETOUR ARROW RIGHT or LEFT/AHD AND RT or LT		15	
M4-10-48	48"x18"	DETOUR ARROW RIGHT or LEFT		23	
M5-1-21	21"x15"	ARROW AHD AND RT or LT(Mounted on route marker post)		7	
M5-2-21	21"x15"	ARROW AHD UP & RT or LT (Mounted on route marker post)		7	
M6-1-21	21"x15"	ARROW RT or LT (Mounted on route marker post)		7	
M6-2-21	21"x15"	ARROW UP & RT or LT (Mounted on route marker post)		7	
M6-3-21	21"x15"	ARROW AHD (Mounted on route marker post)		7	
R1-1-48	**48"x48"**	**STOP**	**2**	**32**	**64**
R1-1a-18	**18"x18"**	**STOP and SLOW PADDLE Back to Back**	**4**	**5**	**20**
R1-2-60	60"x60"	YIELD		29	
R2-1-48	**48"x60"**	**SPEED LIMIT __**	**8**	**39**	**312**
R2-1a-24	**24"x18"**	**MINIMUM FEE $80 (Mounted on Speed Limit post)**	**8**	**10**	**80**
R3-7-48	48"x48"	LEFT or RIGHT LANE MUST TURN LEFT or RIGHT		35	
R4-1-48	**48"x60"**	**DO NOT PASS**	**4**	**39**	**156**
R4-7-48	48"x60"	KEEP RIGHT SYMBOL		39	
R5-1-48	48"x48"	DO NOT ENTER		35	
R6-1-36	36"x12"	ONE WAY RIGHT or LEFT		13	
R7-1-12	12"x18"	NO PARKING		11	
R10-6-24	24"x36"	STOP HERE ON RED		16	
R11-2-48	48"x30"	ROAD CLOSED		28	
R11-2a-48	48"x30"	STREET CLOSED		28	
R11-3a-60	60"x30"	ROAD CLOSED __ MILES AHEAD LOCAL TRAFFIC ONLY		31	
R11-3c-60	60"x30"	STREET CLOSED __ MILES AHEAD LOCAL TRAFFIC ONLY		31	
R11-4a-60	60"x30"	STREET CLOSED TO THRU TRAFFIC		31	
W1-3-48	48"x48"	RIGHT or LEFT SHARP REVERSE CURVE ARROW		35	
W1-4-48	48"x48"	RIGHT or LEFT REVERSE CURVE ARROW		35	
W1-4b-48	48"x48"	DOUBLE RIGHT or LEFT REVERSE CURVE ARROW		35	
W1-6-48	48"x24"	LARGE ARROW		26	
W3-1-48	48"x48"	STOP AHEAD SYMBOL		35	
W3-3-48	48"x48"	SIGNAL AHEAD SYMBOL		35	
W3-4-48	**48"x48"**	**BE PREPARED TO STOP**	**4**	**35**	**140**
W3-5-48	**48"x48"**	**SPEED REDUCTION AHEAD**	**4**	**35**	**140**
W4-2-48	48"x48"	RIGHT or LEFT LANE TRANSITION SYMBOL		35	
W5-1-48	48"x48"	ROAD NARROWS		35	
W5-8-48	48"x48"	THRU TRAFFIC RIGHT LANE		35	
W5-9-48	48"x48"	ROAD WORK TRAFFIC ONLY DOWN & LT or RT ARROW		35	
W6-3-48	48"x48"	TWO WAY TRAFFIC SYMBOL		35	
W8-1-48	**48"x48"**	**BUMP**	**8**	**35**	**280**
W8-3-48	**48"x48"**	**PAVEMENT ENDS**	**8**	**35**	**280**
W8-7-48	48"x48"	LOOSE GRAVEL		35	
W8-9a-48	**48"x48"**	**SHOULDER DROP-OFF**	**8**	**35**	**280**
W8-11-48	**48"x48"**	**UNEVEN LANES**	**4**	**35**	**140**
W8-12-48	**48"x48"**	**NO CENTER STRIPE**	**4**	**35**	**140**
W8-53-48	**48"x48"**	**TRUCKS ENTERING HIGHWAY**	**4**	**35**	**140**
W8-54-48	**48"x48"**	**TRUCKS ENTERING AHEAD or __ FT.**	**4**	**35**	**140**
W8-55-48	48"x48"	TRUCKS CROSSING AHEAD or __ FT.		35	
W8-56-48	48"x48"	TRUCKS EXITING HIGHWAY		35	
W9-3a-48	48"x48"	CENTER LANE CLOSED SYMBOL		35	
W12-2-48	48"x48"	LOW CLEARANCE SYMBOL		35	
W13-1-24	24"x24"	__ MPH ADVISORY SPEED PLATE (Mounted on warning sign post)		11	
W13-4-48	48"x60"	RAMP ARROW		39	
W14-3-48	48"x36"	NO PASSING ZONE		23	
W20-1-48	48"x48"	ROAD WORK AHEAD or _FT or _ MILE		35	
W20-2-48	48"x48"	DETOUR AHEAD or __ FT		35	
W20-3-48	48"x48"	ROAD or STREET CLOSED AHEAD or __ FT.		35	
W20-4-48	48"x48"	ONE LANE ROAD AHEAD or __ FT.		35	
W20-5-48	48"x48"	RIGHT or LEFT LANE CLOSED AHEAD or __ FT.		35	
W20-7a-48	**48"x48"**	**FLAGGING SYMBOL**	**4**	**35**	**140**
W20-7k-24	24"x18"	__ FEET (Mounted on warning sign post)		10	
W20-8-48	48"x48"	STREET CLOSED		35	
W20-51-48	48"x48"	EQUIPMENT WORKING		35	
W20-52-54	54"x12"	NEXT __ MILES (Mounted on warning sign post)		12	
W21-1a-48	48"x48"	WORKERS SYMBOL		35	
W21-2-48	48"x48"	FRESH OIL		35	
W21-3-48	48"x48"	ROAD MACHINERY AHEAD or __ FT		35	

SIGN NUMBER	SIGN SIZE	DESCRIPTION	AMOUNT REQUIRED	UNITS PER AMOUNT	UNITS SUB TOTAL
W21-5-48	**48"x48"**	**SHOULDER WORK**	**4**	**35**	**140**
W21-5a-48	48"x48"	RIGHT or LEFT SHOULDER CLOSED		35	
W21-5b-48	48"x48"	RIGHT or LEFT SHOULDER CLOSED AHEAD or __ FT.		35	
W21-6a-48	48"x48"	SURVEY CREW AHEAD		35	
W21-50-48	48"x48"	BRIDGE PAINTING AHEAD or __ FT.		35	
W21-51-48	48"x48"	MATERIAL ON ROADWAY		35	
W22-8-48	48"x48"	FRESH OIL LOOSE ROCK		35	
	24"x24"	TAKE TURNS (6" D letters) (Mounted on stop sign post)		11	

SPECIAL SIGNS

SPEC & CODE

704-1000	**TRAFFIC CONTROL SIGNS**	**TOTAL UNITS**	**3570**

SPEC & CODE	DESCRIPTION	UNIT	QUANTITY
704-0100	**FLAGGING**	**MHR**	**5000**
704-1041	ATTENUATION DEVICE-TYPE B-55	EACH	
704-1043	ATTENUATION DEVICE-TYPE B-65	EACH	
704-1044	ATTENUATION DEVICE-TYPE B-70	EACH	
704-1050	TYPE I BARRICADES	EACH	
704-1051	TYPE II BARRICADES	EACH	
704-1052	**TYPE III BARRICADES**	**EACH**	**100**
704-1060	**DELINEATOR DRUMS**	**EACH**	**200**
704-1065	TRAFFIC CONES	EACH	
704-1067	**TUBULAR MARKERS**	**EACH**	**650**
704-1070	DELINEATOR	EACH	
704-1072	FLEXIBLE DELINEATORS	EACH	
704-1080	**STACKABLE VERTICAL PANELS**	**EACH**	**2600**
704-1081	**VERTICAL PANELS - BACK TO BACK**	**EACH**	**50**
704-1085	SEQUENCING ARROW PANEL - TYPE A	EACH	
704-1086	SEQUENCING ARROW PANEL - TYPE B	EACH	
704-1087	SEQUENCING ARROW PANEL - TYPE C	EACH	
704-1088	SEQUENCING ARROW PANEL - TYPE C - CROSSOVER	EACH	
704-1095	TYPE B FLASHERS	EACH	
704-1500	OBLITERATION OF PVMT MK	SF	
704-3501	PORTABLE PRECAST CONCRETE MED BARRIER	LF	
704-3510	PRECAST CONCRETE MED BARRIER - STATE FURNISHED	EACH	
762-0200	RAISED PAVEMENT MARKERS	EACH	
762-0420	SHORT TERM 4IN LINE - TYPE R	LF	
762-0430	**SHORT TERM 4IN LINE - TYPE NR**	**LF**	**119975**
772-2110	FLASHING BEACON - POST MOUNTED	EACH	

NOTE:
If additional signs are required, units will be calculated using the formula from Section III-19.06 of the Design Manual.
http://www.dot.nd.gov/

This document was originally issued and sealed by William Doerr, PE, Registration Number PE-7113, on 12/4/15 and the original document is stored at the North Dakota Department of Transportation.

Traffic Control Devices List

ND 58

Jct 200 to Jct 1804

STATE	PROJECT NO.	SECTION NO.	SHEET NO.
ND	SOIB-7-058(013)00	100	2

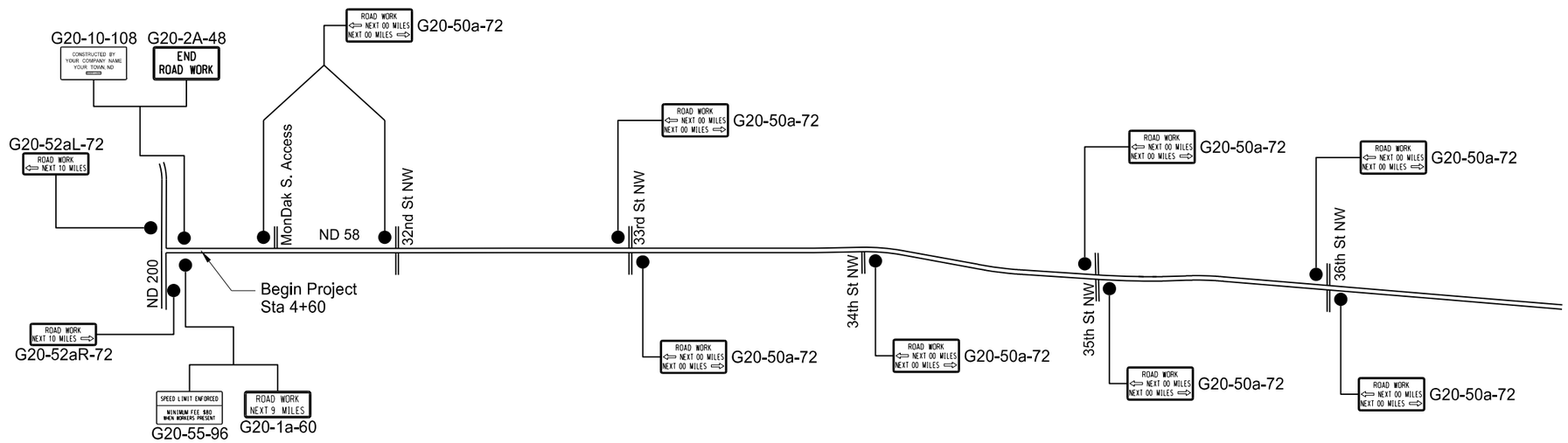

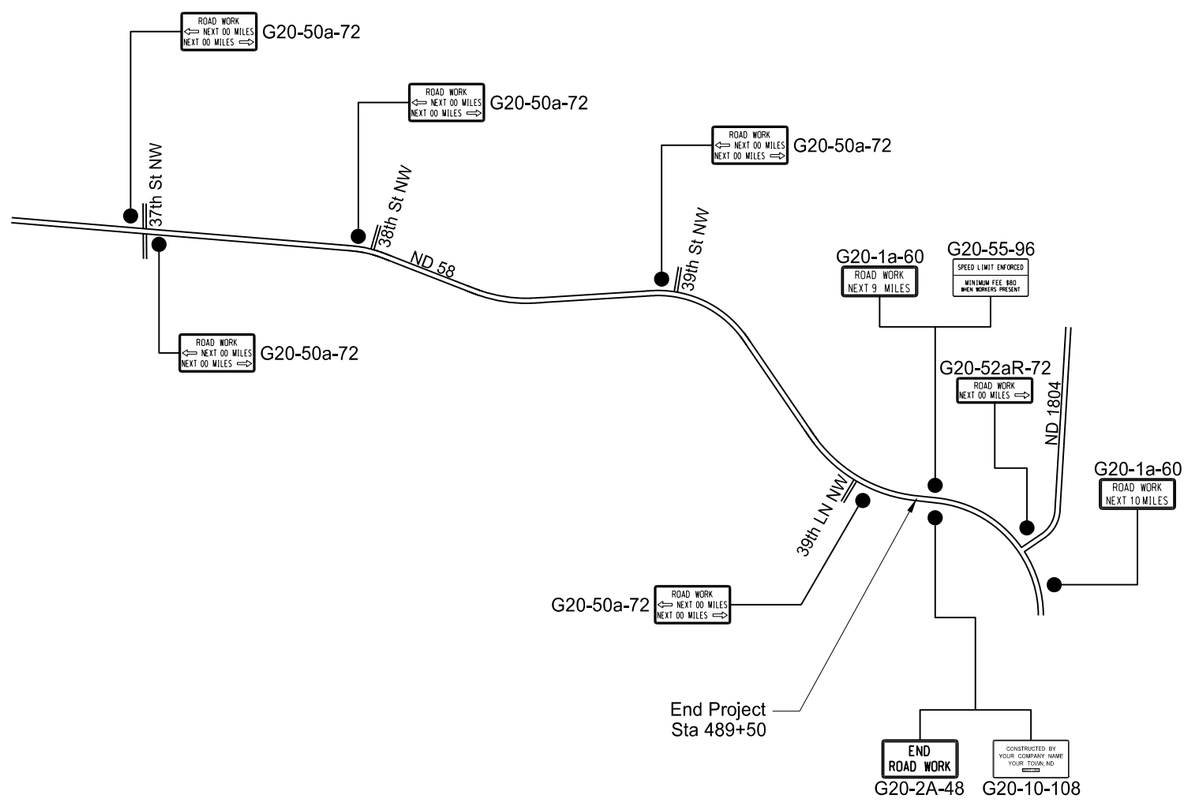

This document was originally issued and sealed by William Doerr, Registration Number PE- 7113, on 12/04/15 and the original document is stored at the North Dakota Department of Transportation

Construction Signing

ND 58

Jct 200 to Jct 1804

STATE	PROJECT NO.	SECTION NO.	SHEET NO.
ND	SOIB-7-058(013)00	100	3

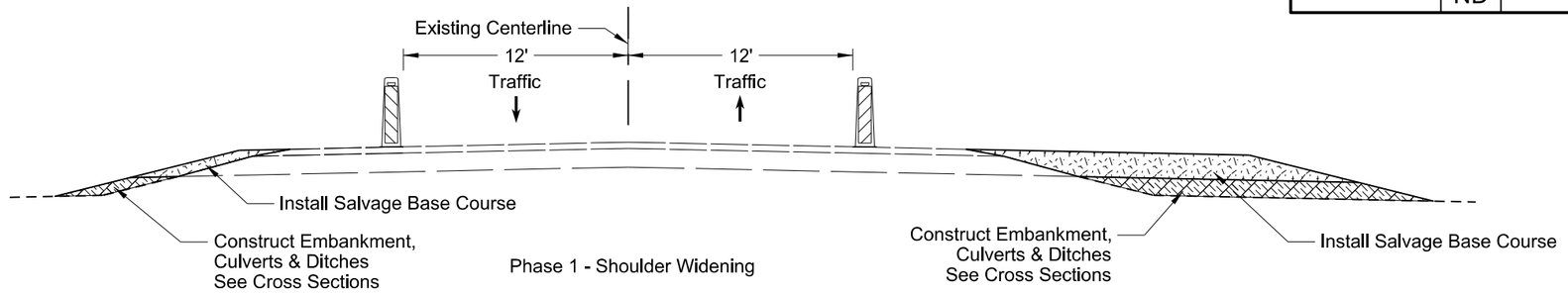

Phase 1 - Shoulder Widening

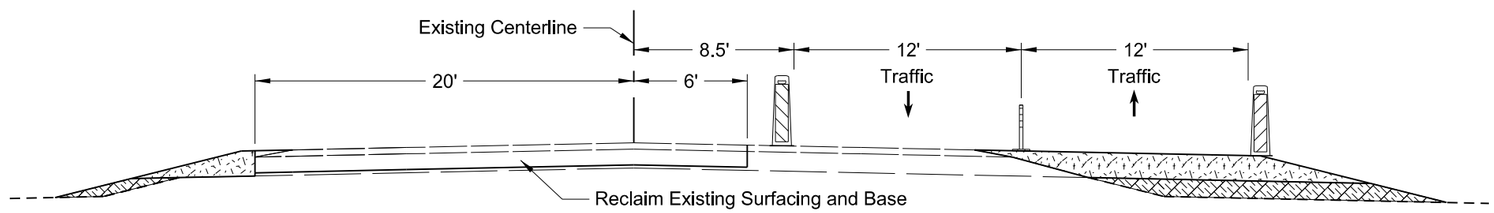

Phase 2a - Reclaim Existing Surfacing

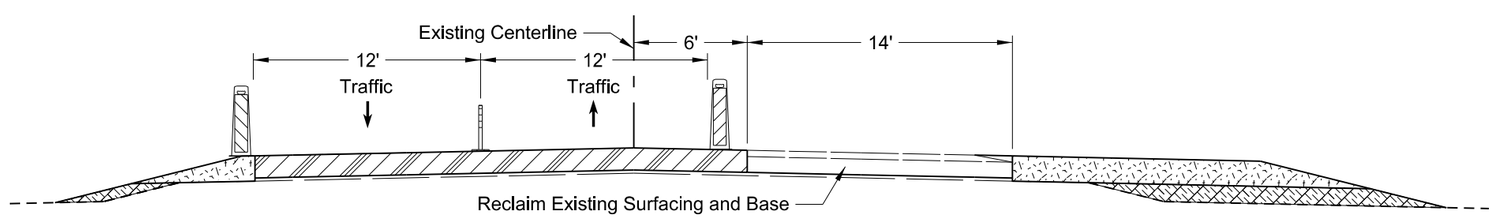

Phase 2b - Reclaim Existing Surfacing

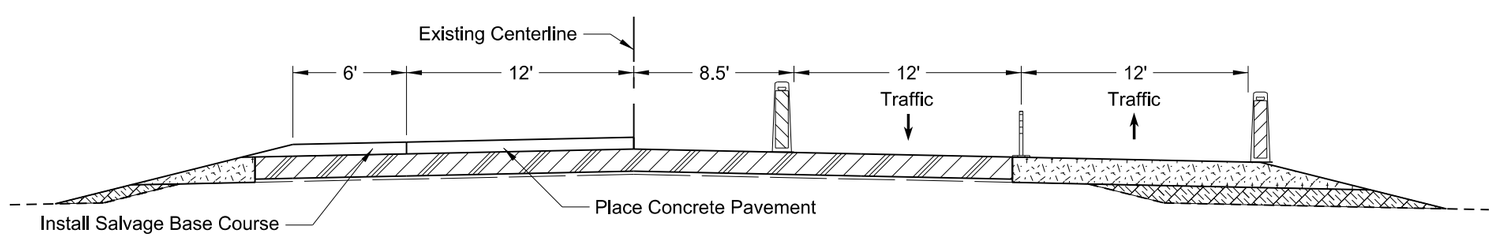

Phase 3 - Pave SB Lane & SB Turn Lanes

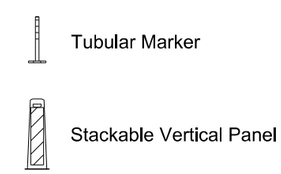

This document was originally issued and sealed by William Doerr, Registration Number PE- 7113, on 12/04/15 and the original document is stored at the North Dakota Department of Transportation

Work Zone Traffic Control
For Concrete Roadway Segment

ND 58

Jct 200 to Jct 1804

STATE	PROJECT NO.	SECTION NO.	SHEET NO.
ND	SOIB-7-058(013)00	100	4

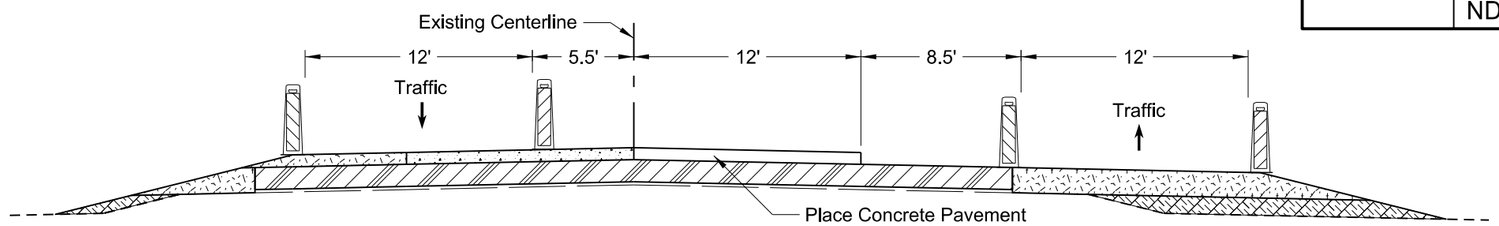

Phase 4 - Pave NB Lane (2 Lane Section) or Center Lane (3 Lane Section)

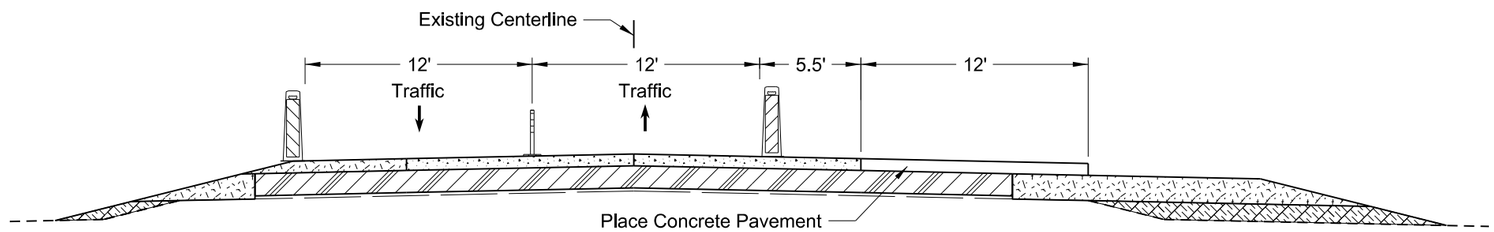

Phase 5 - Pave NB Lane & NB Turn Lanes
(3 Lane Section Only)

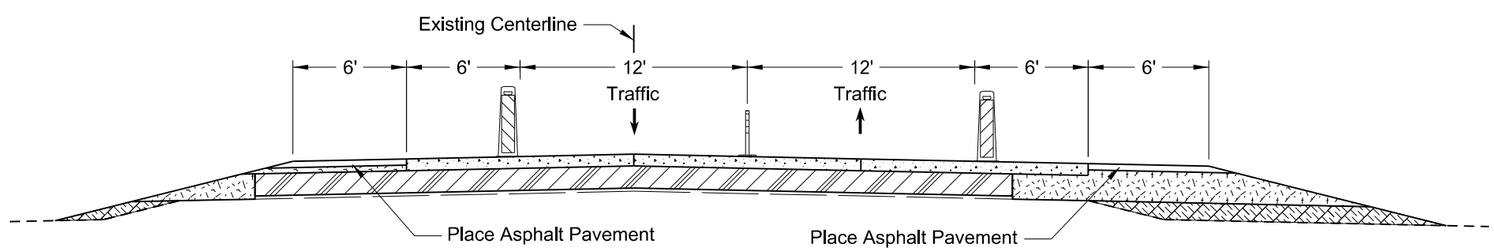

Phase 6 - Pave Asphalt Shoulders

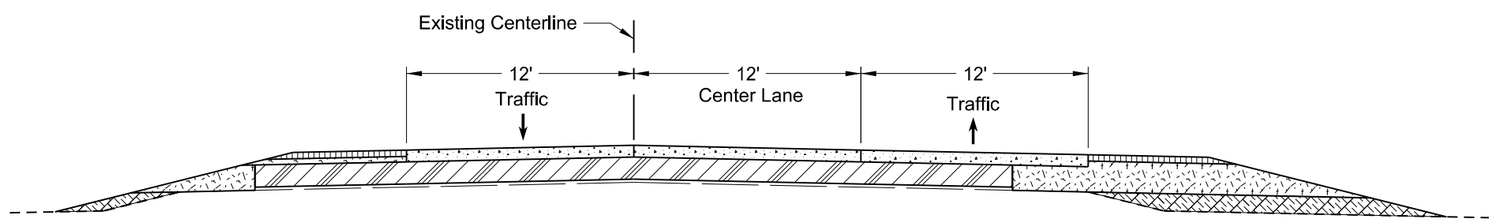

Phase 7 - Finished Typical Section

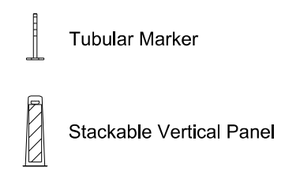

This document was originally issued and sealed by William Doerr, Registration Number PE- 7113, on 12/04/15 and the original document is stored at the North Dakota Department of Transportation

Work Zone Traffic Control
For Concrete Roadway Segment

ND 58

Jct 200 to Jct 1804

STATE	PROJECT NO.	SECTION NO.	SHEET NO.
N.D.	SOIB-7-058(013)000	110	1

Sta/RP	Sign No.	Assembly No.	Flat Sheet For Signs IV SF	Flat Sheet For Signs XI SF	Sign Support Length 1st LF	Sign Support Length 2nd LF	Sign Support Length 3rd LF	Sign Support Length 4th LF	Support Size	Max Post Len LF	Sleeve Length 1st LF	Sleeve Length 2nd LF	Sleeve Length 3rd LF	Sleeve Length 4th LF	Sleeve Size	Anchor EA	Anchor LF	Anchor Size	Reset Sign Panel EA	Reset Sign Support EA	Break-Away EA	Comments
004+82 Lt	Guide				12.3	12.4	12.5	12.6	2.25 x 2.25 12 ga	13.0	4.3	4.4	4.5	4.6	2 x 2 12 ga	4	4	3 x 3 7 ga	1		4	
005+67 Rt	R2-1	9			12.5				2.25 x 2.25 12 ga	15.0						1	4	2.5 x 2.5 12 ga	1			
008+35 Lt	W2-6	53			14.0				2.5 x 2.5 10 ga	14.7						1	4	3 x 3 7 ga	1		1	
009+35 Lt	R2-1	9			12.4				2.25 x 2.25 12 ga	15.0						1	4	2.5 x 2.5 12 ga	1			
011+35 Lt	W3-5	20			13.2				2.25 x 2.25 12 ga	14.1	4.4				2 x 2 12 ga	1	4	3 x 3 7 ga	1		1	
020+77 Lt	M1-5	392	7.2		13.2				2.5 x 2.5 12 ga	13.9						1	4	3 x 3 7 ga				
052+56 Lt	R1-1	1		5.2	13.7				2.5 x 2.5 10 ga	16.9						1	4	3 x 3 7 ga			1	
053+10 Rt	SA 2E			5.2	13.6				2.5 x 2.5 12 ga	15.6						1	4	3 x 3 7 ga	1			
086+22 Rt	R1-1	1		5.2	13.6				2.25 x 2.25 12 ga	13.7						1	4	2.5 x 2.5 12 ga				
105+39 Lt	R1-1	1		5.2	13.6				2.25 x 2.25 12 ga	13.7						1	4	2.5 x 2.5 12 ga				
105+90 Rt	SA 2E			5.2	13.8				2.5 x 2.5 12 ga	15.6						1	4	3 x 3 7 ga	1			
105+93 Lt	W10-1	63			12.3				2.5 x 2.5 10 ga	15.3						1	4	3 x 3 7 ga	1		1	
158+53 Rt	SA 2E			5.2	15.1				2.5 x 2.5 12 ga	15.6						1	4	3 x 3 7 ga	1			
164+38 Lt	R1-1				14.3				2.25 x 2.25 12 ga	15.9	4.2				2 x 2 12 ga	1	4	3 x 3 7 ga	1		1	
208+32 Lt	R1-1	1			13.2				2.25 x 2.25 12 ga	13.7						1	4	2.5 x 2.5 12 ga	1			
211+50 Lt	R1-1	1		5.2	13.6				2.25 x 2.25 12 ga	13.7						1	4	2.5 x 2.5 12 ga				
212+14 Rt	SA 2E			5.2	15.0				2.5 x 2.5 12 ga	15.6						1	4	3 x 3 7 ga	1			
238+19 Lt	R1-1	1			10.7				2.25 x 2.25 12 ga	13.7						1	4	2.5 x 2.5 12 ga	1			
264+02 Lt	R1-1	1		5.2	13.6				2.25 x 2.25 12 ga	13.7						1	4	2.5 x 2.5 12 ga				
264+63 Rt	SA 2E			5.2	15.4				2.5 x 2.5 12 ga	15.6						1	4	3 x 3 7 ga	1			
291+28 Rt	SA 2E				15.4				2.5 x 2.5 12 ga	15.6						1	4	3 x 3 7 ga	1			
317+00 Lt	SA 2E				15.1				2.5 x 2.5 12 ga	15.6						1	4	3 x 3 7 ga	1			
344+50 Rt	WOR	57			14.7	15.0			2.5 x 2.5 12 ga	16.9						2	4	3 x 3 7 ga	1		2	
357+70 Rt	W2-2L	20		9.0	13.3				2.25 x 2.25 12 ga	14.1	4.5				2 x 2 12 ga	1	4	3 x 3 7 ga			1	
362+16 Lt	SA 2E			5.2	13.9				2.5 x 2.5 12 ga	15.6						1	4	3 x 3 7 ga	1			
362+37 Rt	W1-7	34			12.8				2.5 x 2.5 10 ga	13.6						1	4	3 x 3 7 ga	1		1	
367+30 Lt	W2-2R	20		9.0	13.8				2.5 x 2.5 12 ga	14.7	4.8				2.25 x 2.25 12 ga	1	4	3 x 3 7 ga			1	
378+40 Rt	W1-2L	19		6.3	13.3				2.5 x 2.5 12 ga	14.5						1	4	3 x 3 7 ga				
392+56 Lt	R1-1	1		5.2	12.3				2.25 x 2.25 12 ga	13.7						1	4	2.5 x 2.5 12 ga				
402+66 Lt	W1-2R	19		6.3	13.3				2.5 x 2.5 12 ga	14.5						1	4	3 x 3 7 ga				
415+90 Rt	W1-2R	19		6.3	13.3				2.5 x 2.5 12 ga	14.5						1	4	3 x 3 7 ga				
424+11 Lt	SA 2E			5.2	13.5				2.5 x 2.5 12 ga	15.6						1	4	3 x 3 7 ga	1			
435+13 Rt	W5-2L	20		9.0	14.3				2.5 x 2.5 12 ga	14.7	5.3				2.25 x 2.25 12 ga	1	4	3 x 3 7 ga			1	
441+69 Lt	WOR	57			14.8				2.5 x 2.5 12 ga	15.2	5.3				2.25 x 2.25 12 ga	1	4	3 x 3 7 ga	1		1	

Basis of Estimate
Sign Support Lengths

The sign support lengths have been calculated using the following vertical clearances:

Rural Roadway - 60"

This document was originally issued and sealed by William Doerr, P.E., Registration Number 7113, on 12/4/2015 and the original document is stored at the North Dakota Department of Transportation

Sign Summary
Perforated Tube

ND 58

Jct 200 to Jct 1804

STATE	PROJECT NO.	SECTION NO.	SHEET NO.
N.D.	SOIB-7-058(013)000	110	2

Sta/RP	Sign No.	Assembly No.	Flat Sheet For Signs IV SF	Flat Sheet For Signs XI SF	Sign Support Length 1st LF	Sign Support Length 2nd LF	Sign Support Length 3rd LF	Sign Support Length 4th LF	Support Size	Max Post Len LF	Sleeve Length 1st LF	Sleeve Length 2nd LF	Sleeve Length 3rd LF	Sleeve Length 4th LF	Sleeve Size	Anchor EA	Anchor LF	Anchor Size	Reset Sign Panel EA	Reset Sign Support EA	Break-Away EA	Comments
442+25 Rt	SN 1		11.3		13.3				2.5 x 2.5 12 ga	14.1	4.9				2.25 x 2.25 12 ga	1	4	3 x 3 7 ga			1	
457+28 Lt	W1-2L	19		6.3	14.0				2.25 x 2.25 12 ga	19.3	2.4				2 x 2 12 ga	1	4	3 x 3 7 ga			1	
458+12 Lt	SN 1		11.3		13.6				2.5 x 2.5 12 ga	14.1	5.2				2.25 x 2.25 12 ga	1	4	3 x 3 7 ga			1	
463+38 Lt	W5-2L	20			13.6				2.25 x 2.25 12 ga	14.1	4.8				2 x 2 12 ga	1	4	3 x 3 7 ga	1		1	
Sub Total			29.8	119.8		**Total**	569.9									**Total**	168		22	0	20	
Grand Total			29.8	119.8		**Total**	569.9									**Total**	168		22	0	20	

Basis of Estimate
Sign Support Lengths

The sign support lengths have been calculated using the following vertical clearances:

Rural Roadway - 60"

This document was originally issued and sealed by William Doerr, P.E., Registration Number 7113, on 12/4/2015 and the original document is stored at the North Dakota Department of Transportation

Sign Summary
Perforated Tube

ND 58

Jct 200 to Jct 1804

STATE	PROJECT NO.	SECTION NO.	SHEET NO.
ND	SOIB-7-058(013)000	110	3

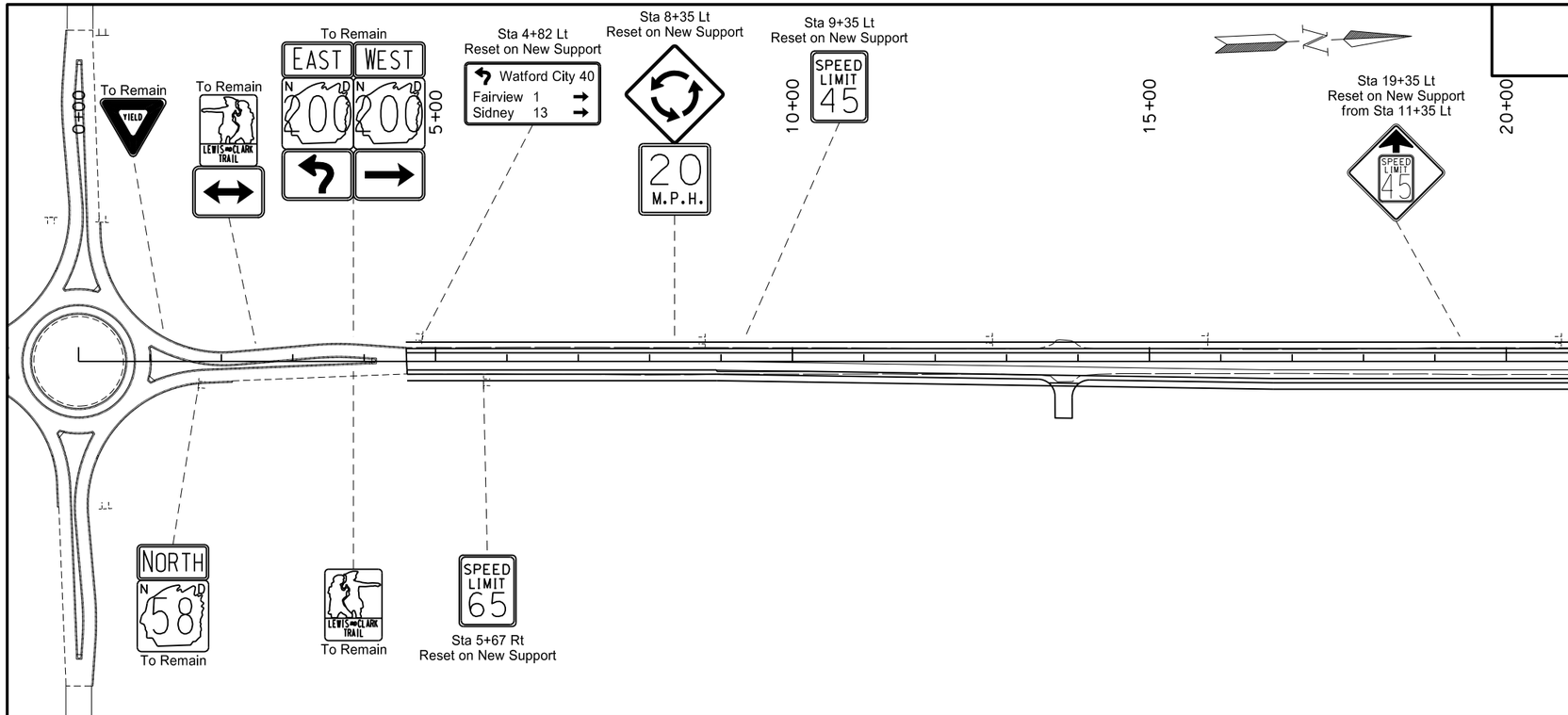

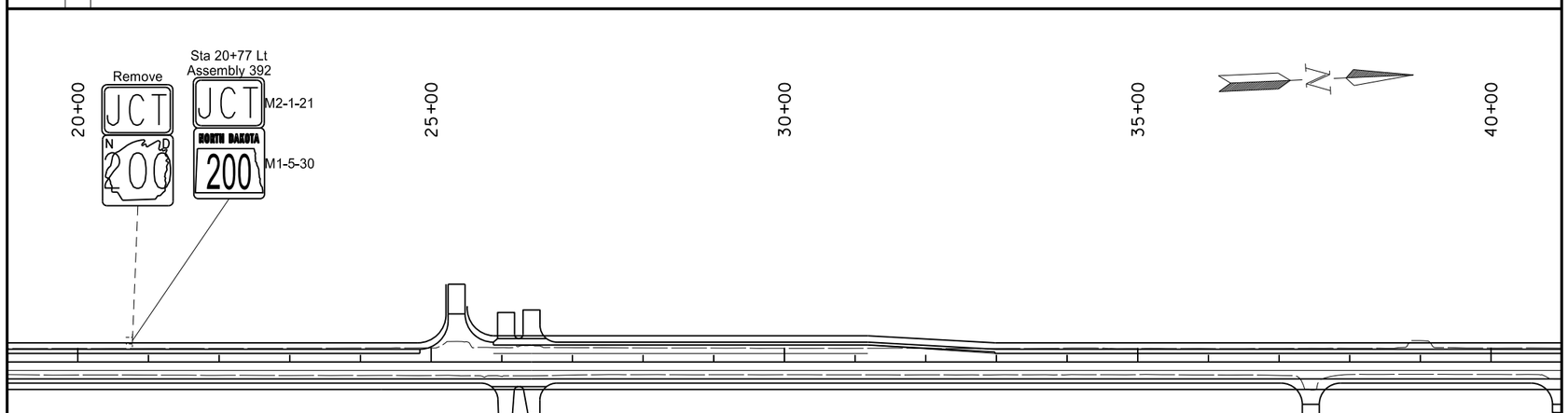

SPEC	CODE	BID ITEM		QUANTITY	UNIT
754	0561	REFERENCE MARKER-TYPE A			
		RP #	Location	9	EA
		1	52+55 Rt		
		2	105+22 Rt		
		3	158+12 Rt		
		4	211+15 Rt		
		5	263+96 Rt		
		6	316+81 Rt		
		7	369+56 Rt		
		8	422+37 Rt		
		9	475+25 Rt		

This document was originally issued and sealed by William Doerr, Registration Number PE- 7113, on 12/04/15 and the original document is stored at the North Dakota Department of Transportation

Sign Layout

ND 58

Jct 200 to Jct 1804

STATE	PROJECT NO.	SECTION NO.	SHEET NO.
ND	SOIB-7-058(013)000	110	4

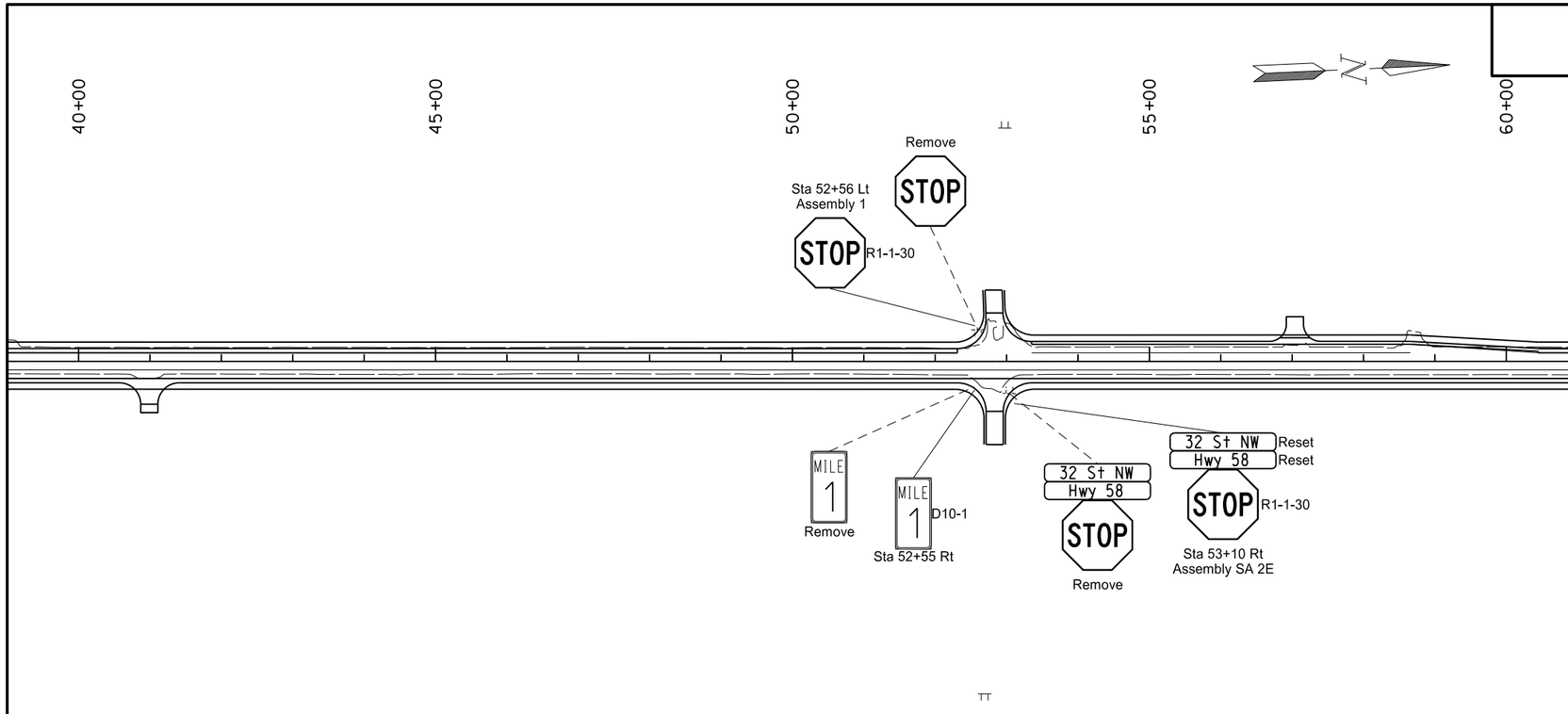

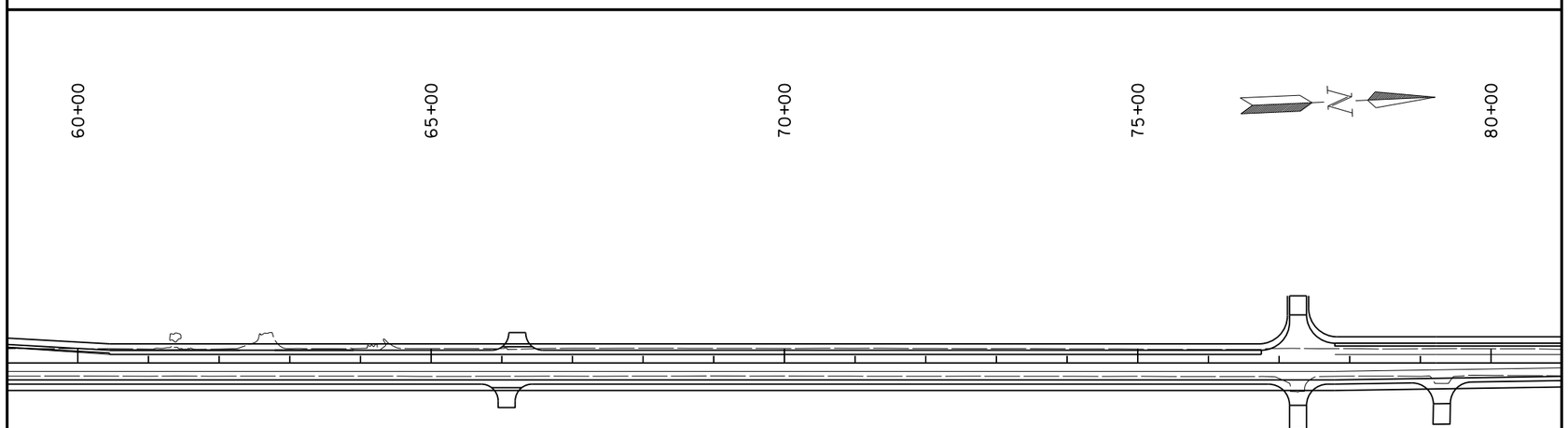

This document was originally issued and sealed by William Doerr, Registration Number PE- 7113, on 12/04/15 and the original document is stored at the North Dakota Department of Transportation

Sign Layout

ND 58

Jct 200 to Jct 1804

STATE	PROJECT NO.	SECTION NO.	SHEET NO.
ND	SOIB-7-058(013)000	110	5

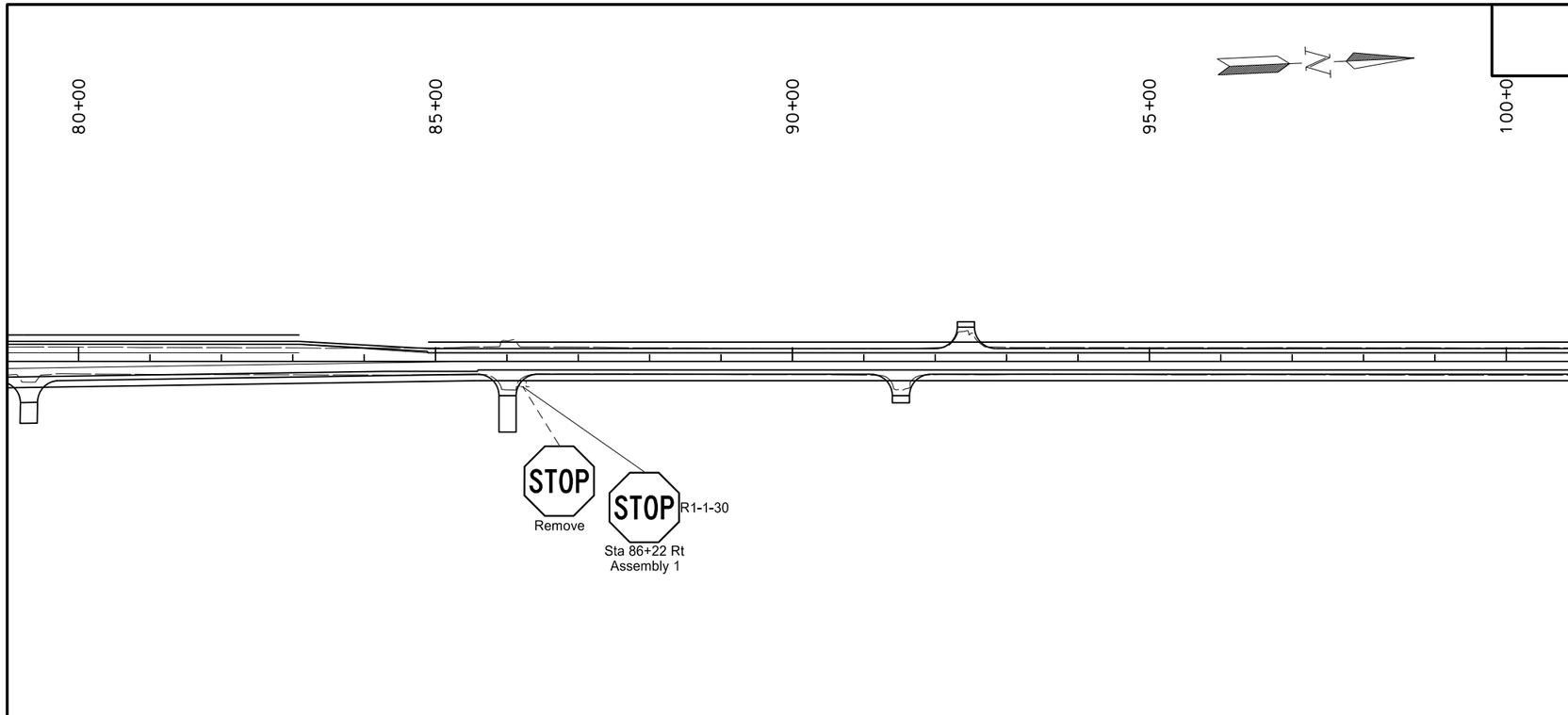

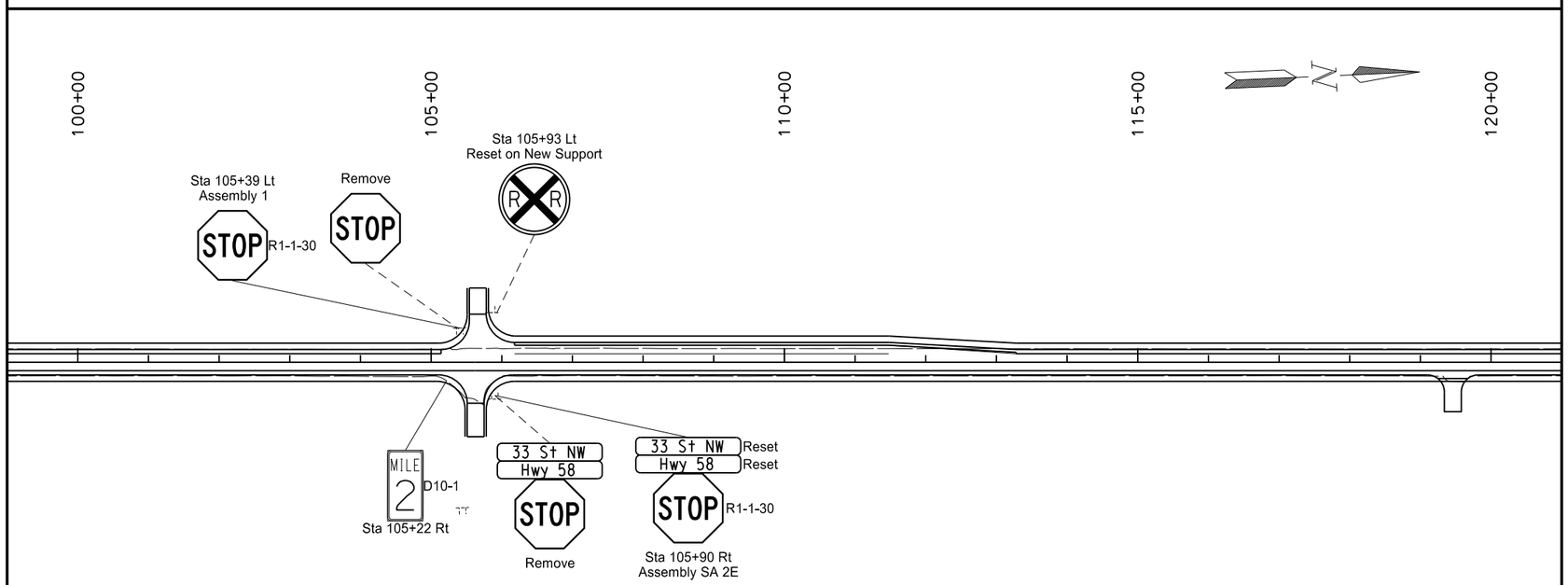

This document was originally issued and sealed by William Doerr, Registration Number PE- 7113, on 12/04/15 and the original document is stored at the North Dakota Department of Transportation

Sign Layout

ND 58

Jct 200 to Jct 1804

STATE	PROJECT NO.	SECTION NO.	SHEET NO.
ND	SOIB-7-058(013)000	110	6

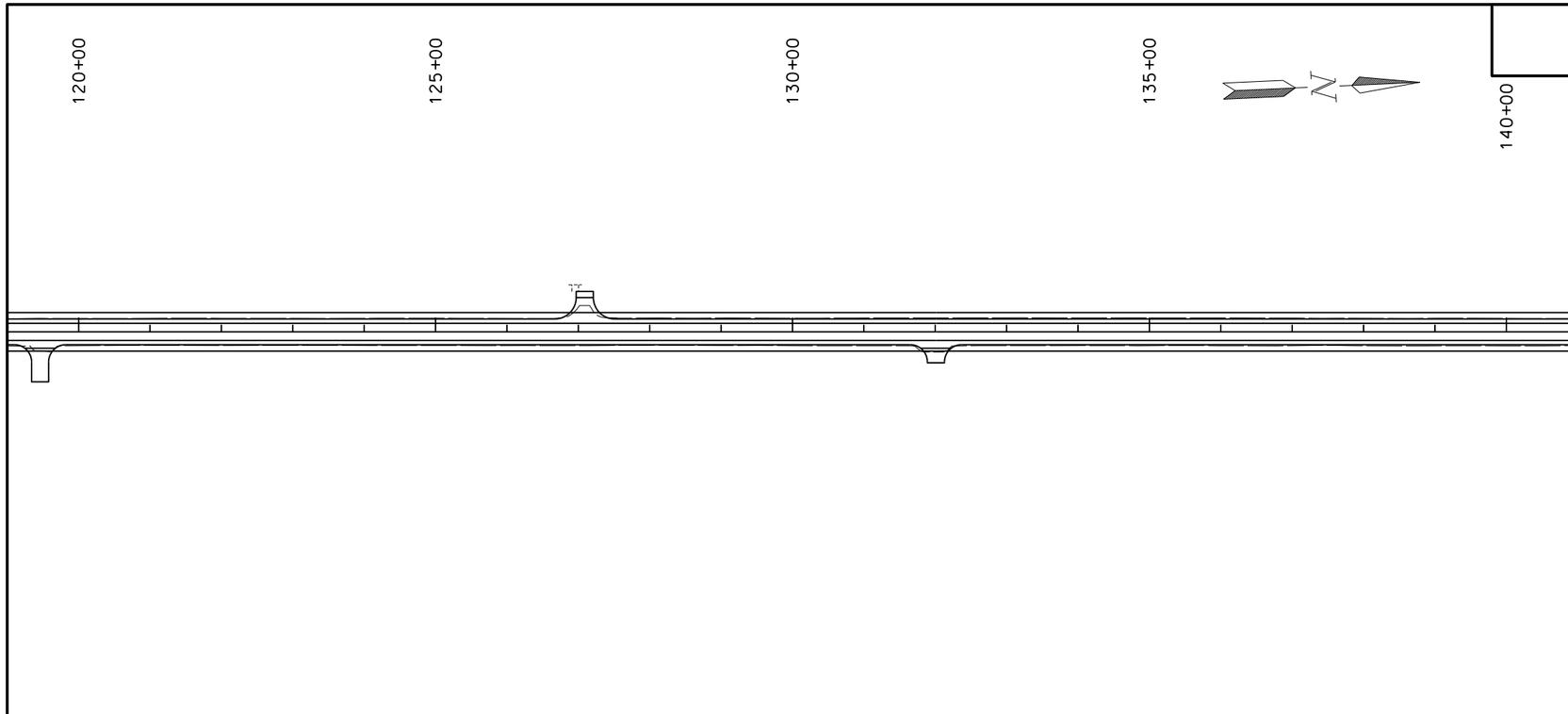

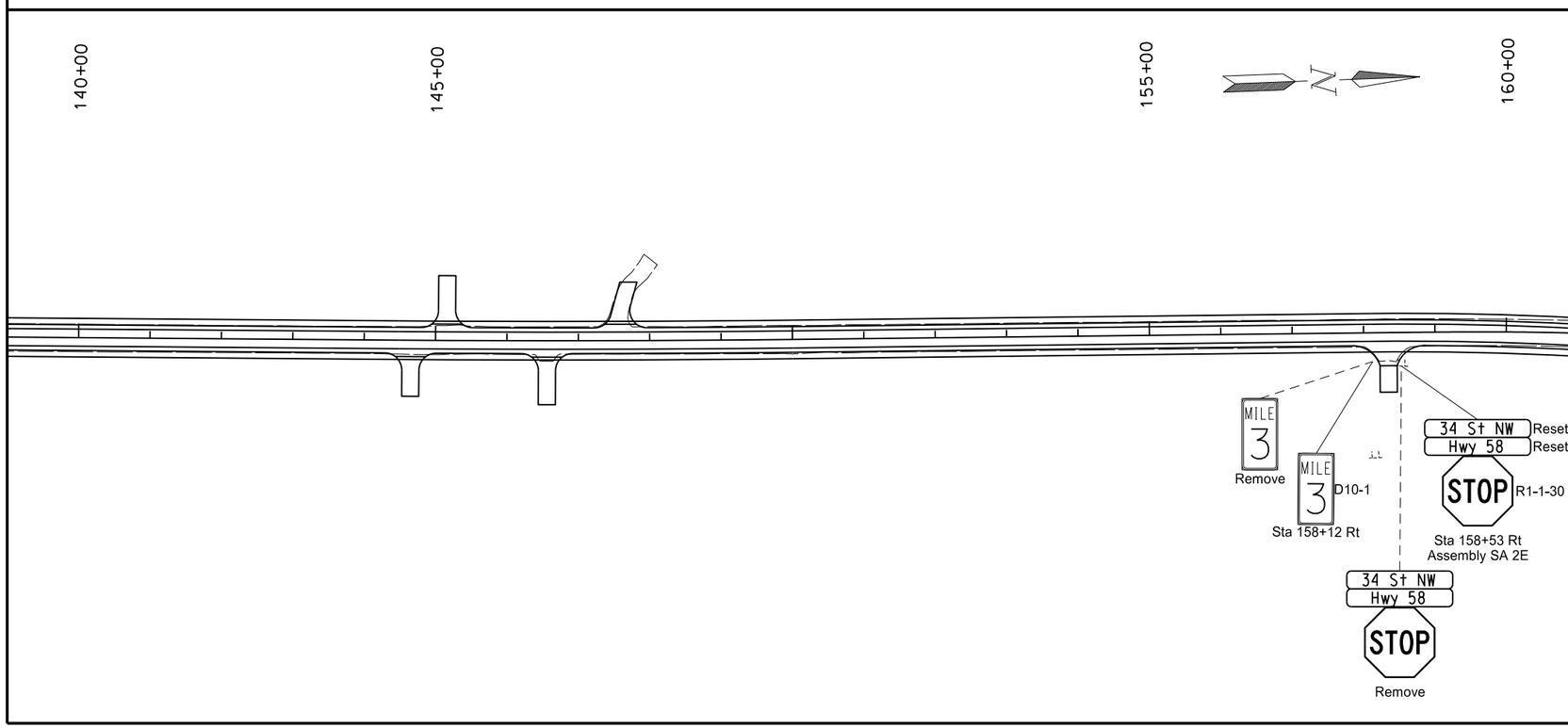

This document was originally issued and sealed by William Doerr, Registration Number PE- 7113, on 12/04/15 and the original document is stored at the North Dakota Department of Transportation

Sign Layout

ND 58

Jct 200 to Jct 1804

STATE	PROJECT NO.	SECTION NO.	SHEET NO.
ND	SOIB-7-058(013)000	110	7

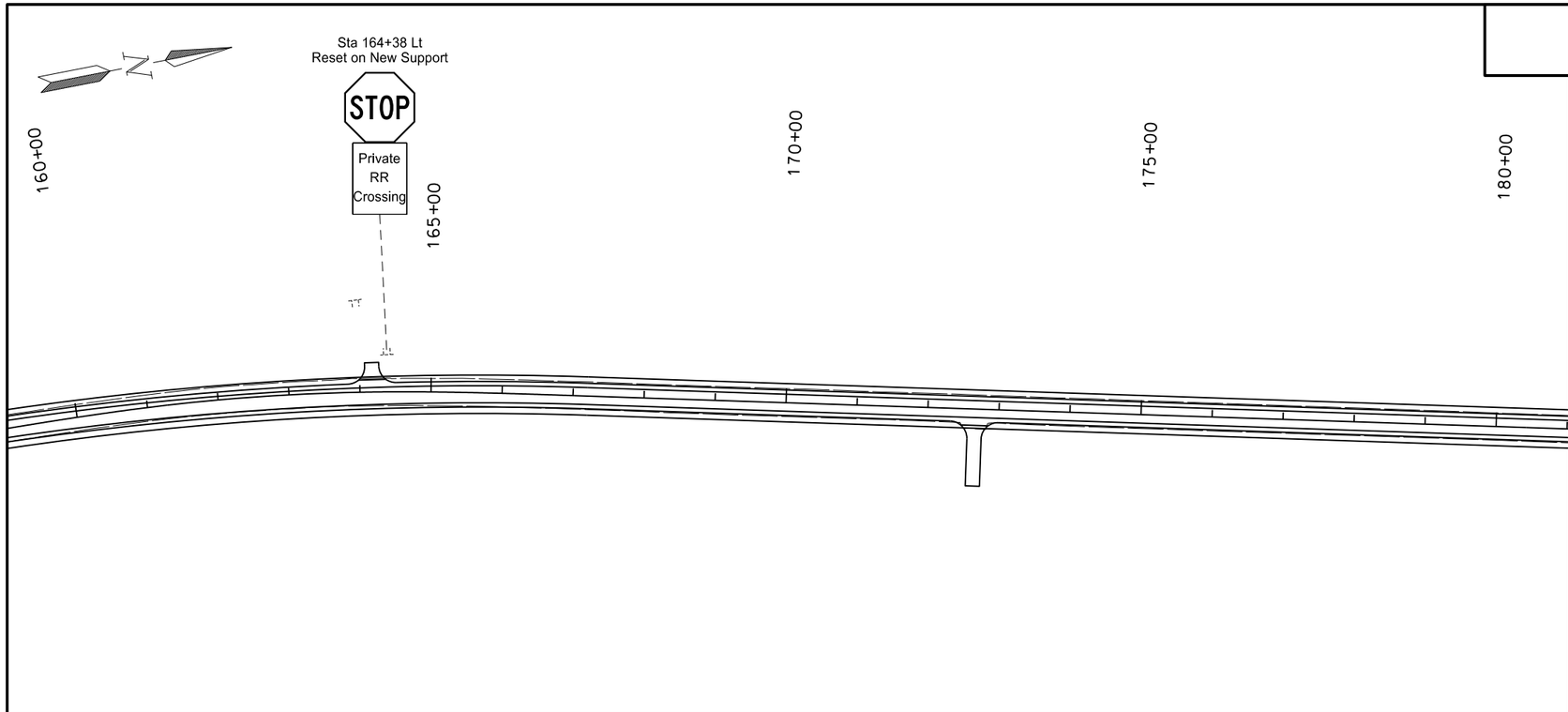

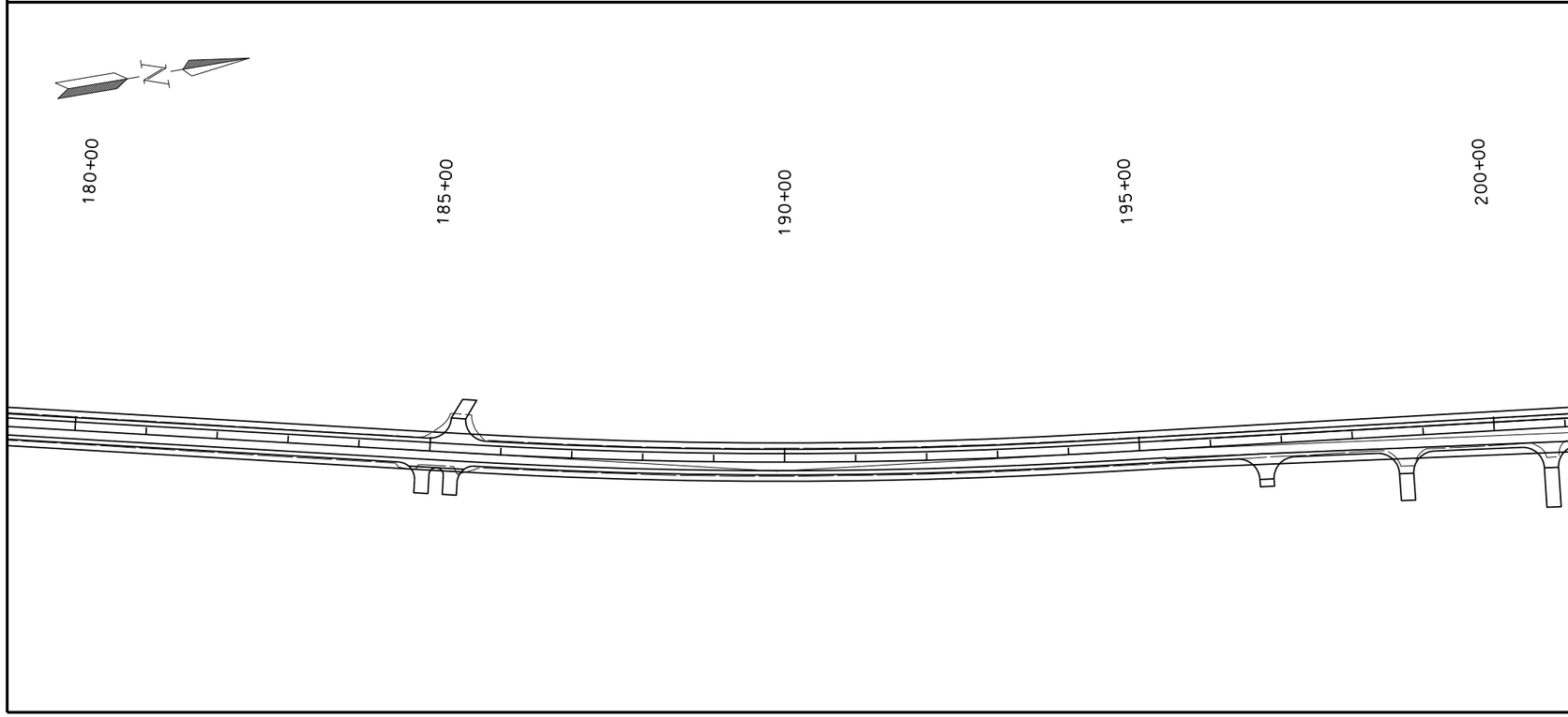

This document was originally issued and sealed by William Doerr, Registration Number PE- 7113, on 12/04/15 and the original document is stored at the North Dakota Department of Transportation

Sign Layout

ND 58

Jct 200 to Jct 1804

STATE	PROJECT NO.	SECTION NO.	SHEET NO.
ND	SOIB-7-058(013)000	110	8

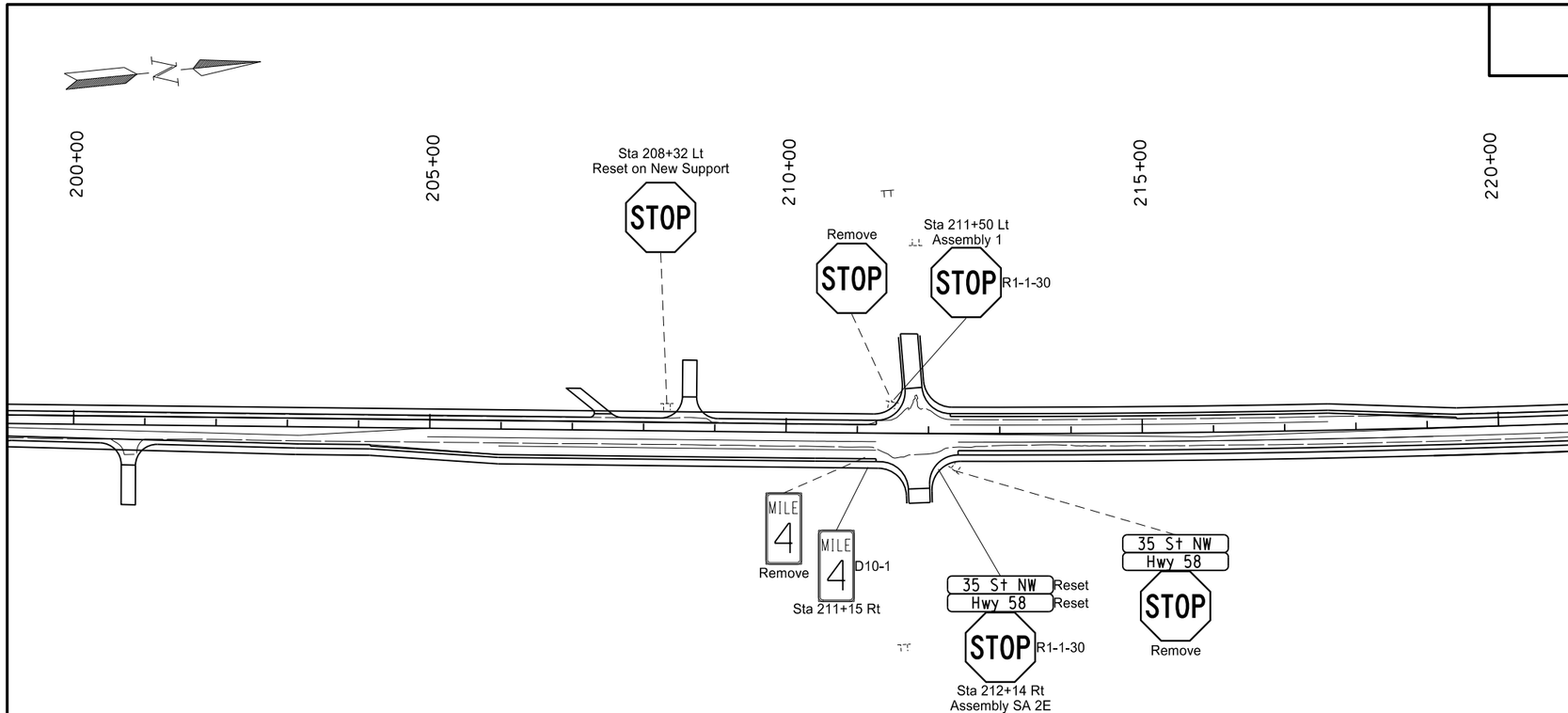

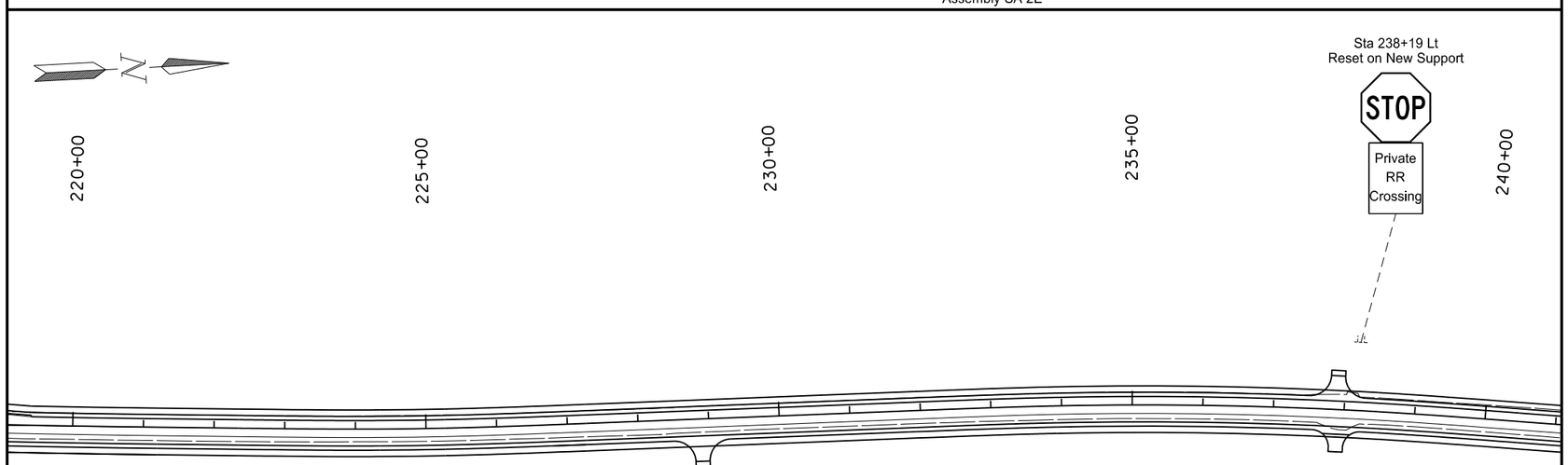

This document was originally issued and sealed by William Doerr, Registration Number PE- 7113, on 12/04/15 and the original document is stored at the North Dakota Department of Transportation

Sign Layout

ND 58

Jct 200 to Jct 1804

STATE	PROJECT NO.	SECTION NO.	SHEET NO.
ND	SOIB-7-058(013)000	110	9

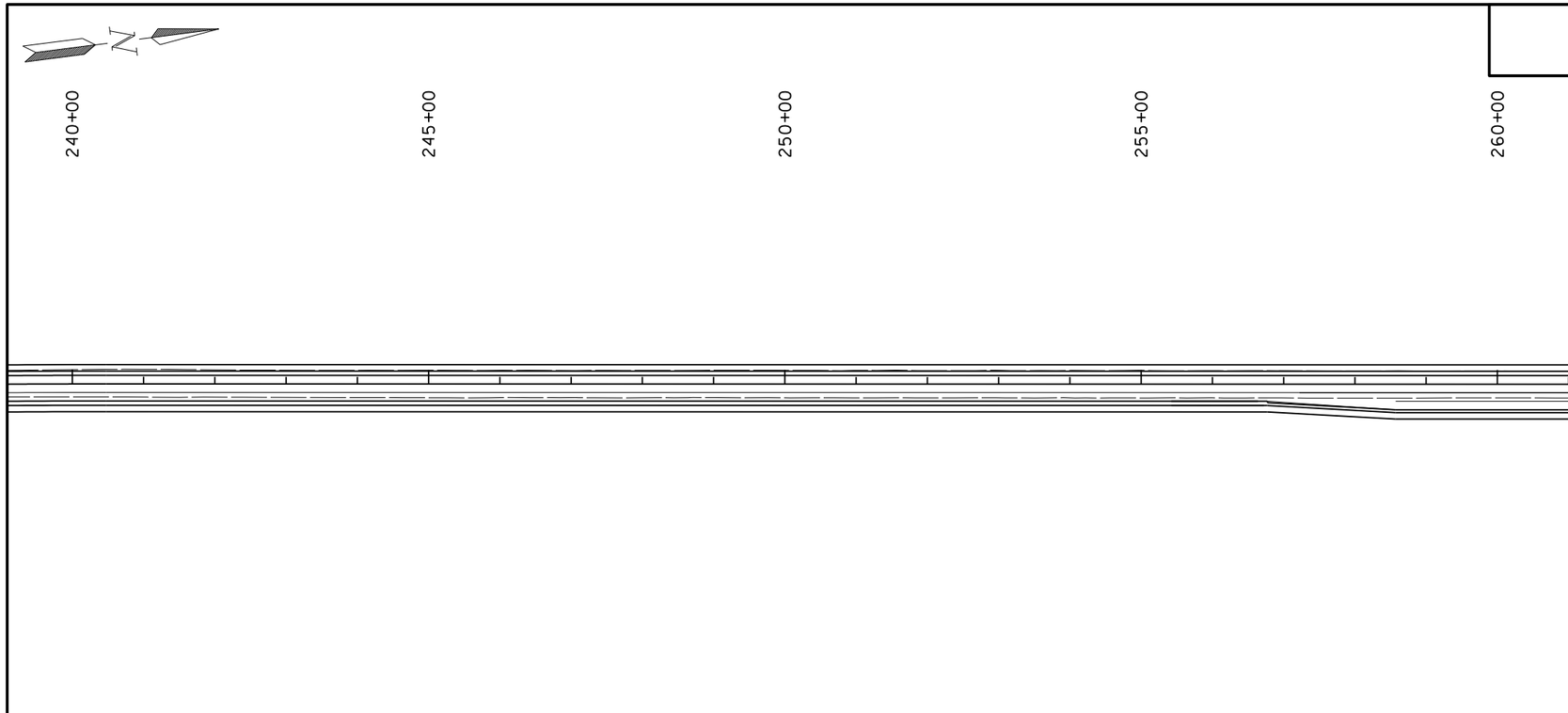

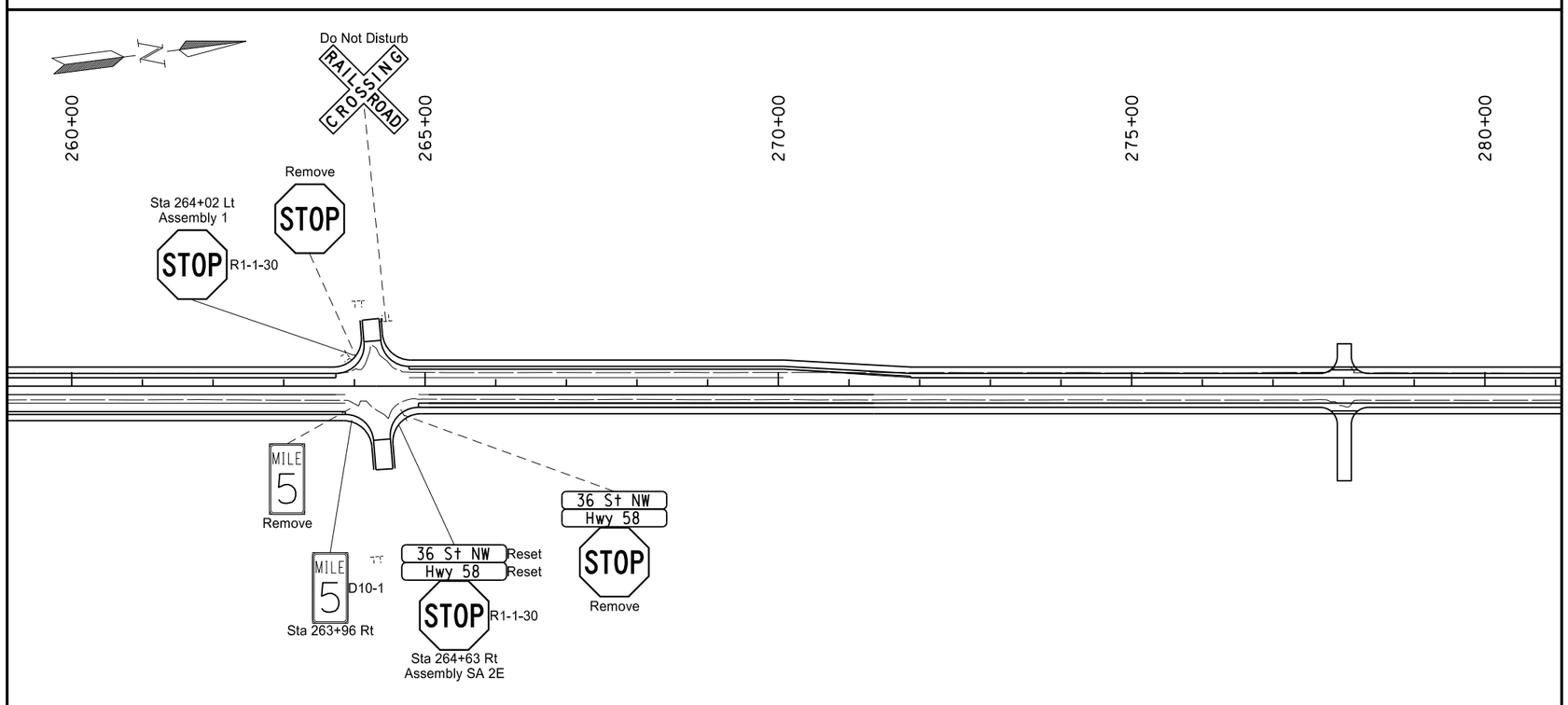

This document was originally issued and sealed by William Doerr, Registration Number PE- 7113, on 12/04/15 and the original document is stored at the North Dakota Department of Transportation

Sign Layout

ND 58

Jct 200 to Jct 1804

STATE	PROJECT NO.	SECTION NO.	SHEET NO.
ND	SOIB-7-058(013)000	110	10

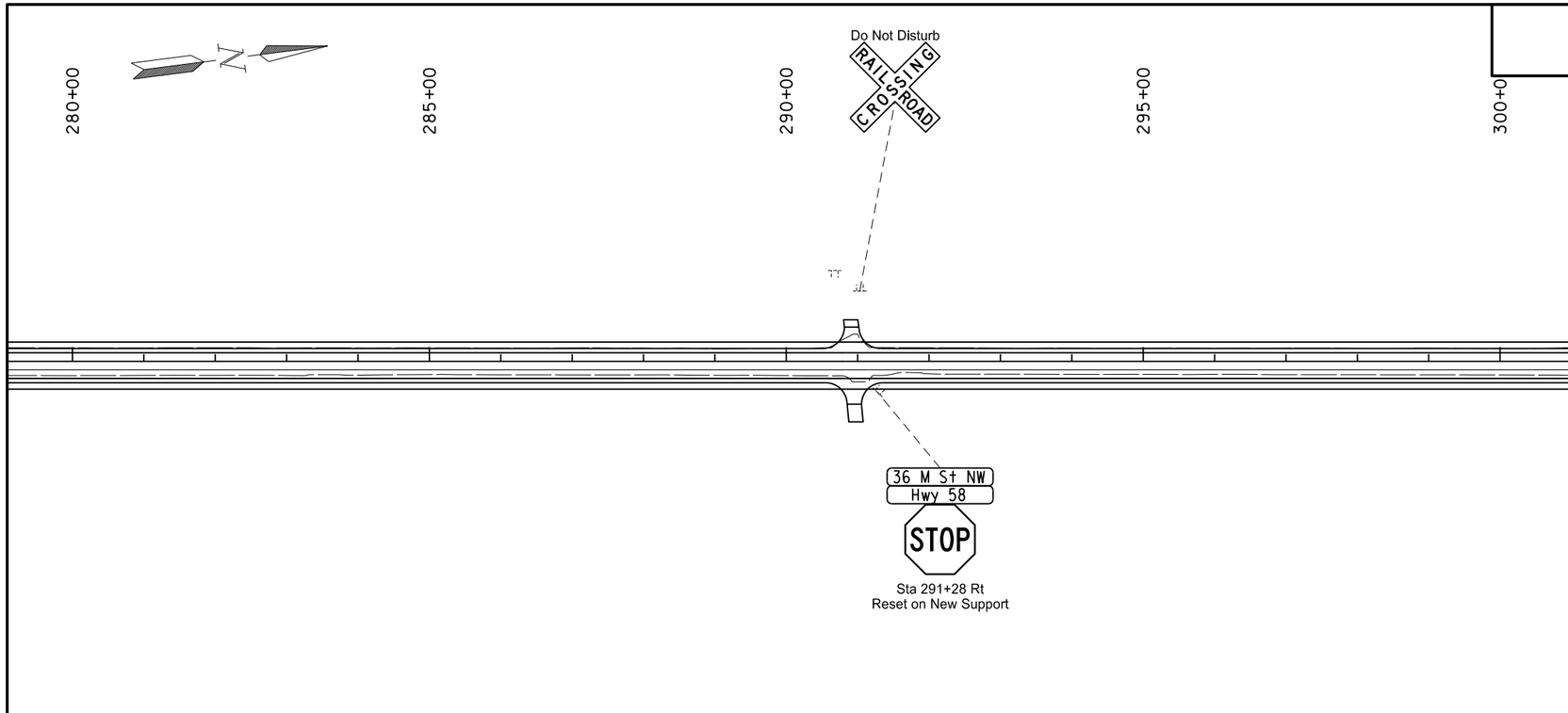

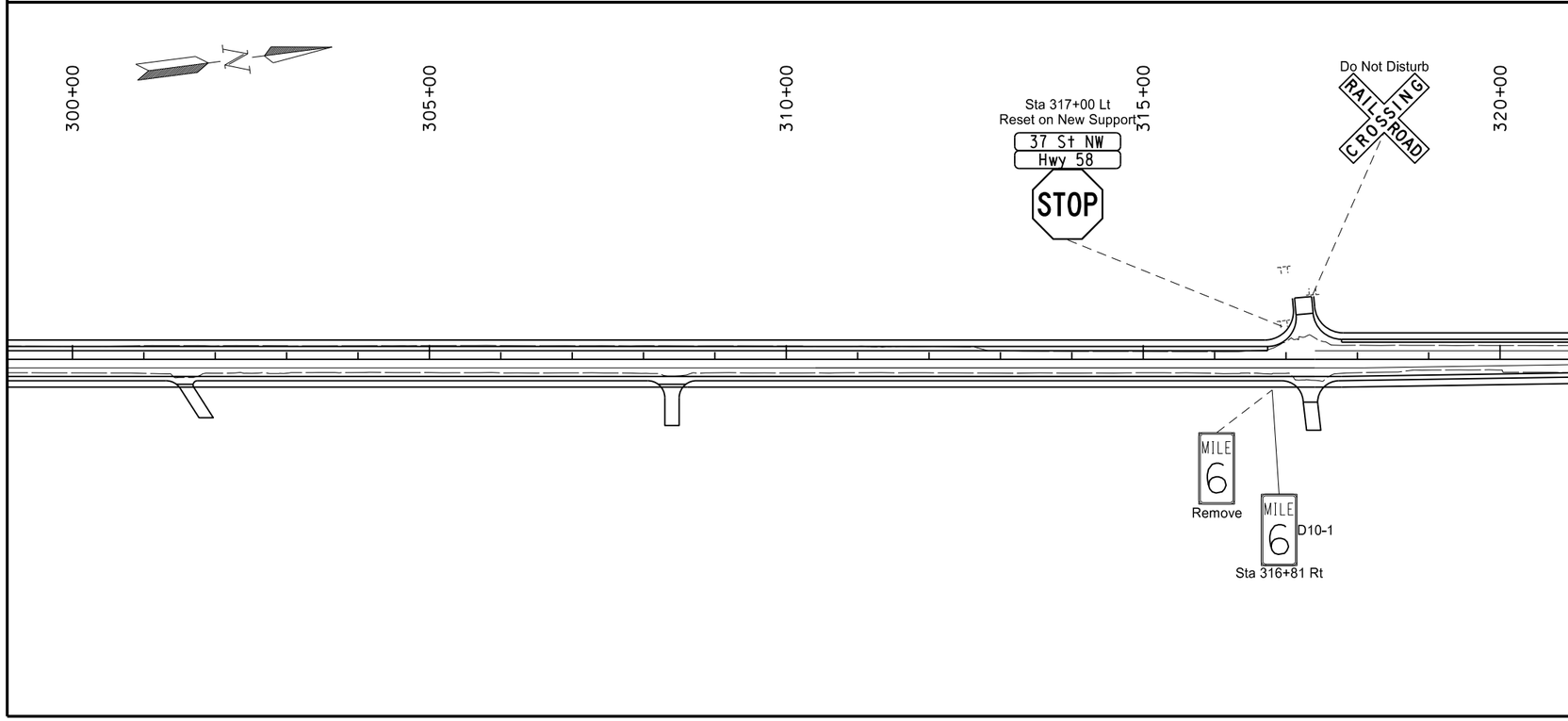

This document was originally issued and sealed by William Doerr, Registration Number PE- 7113, on 12/04/15 and the original document is stored at the North Dakota Department of Transportation

Sign Layout

ND 58

Jct 200 to Jct 1804

STATE	PROJECT NO.	SECTION NO.	SHEET NO.
ND	SOIB-7-058(013)000	110	11

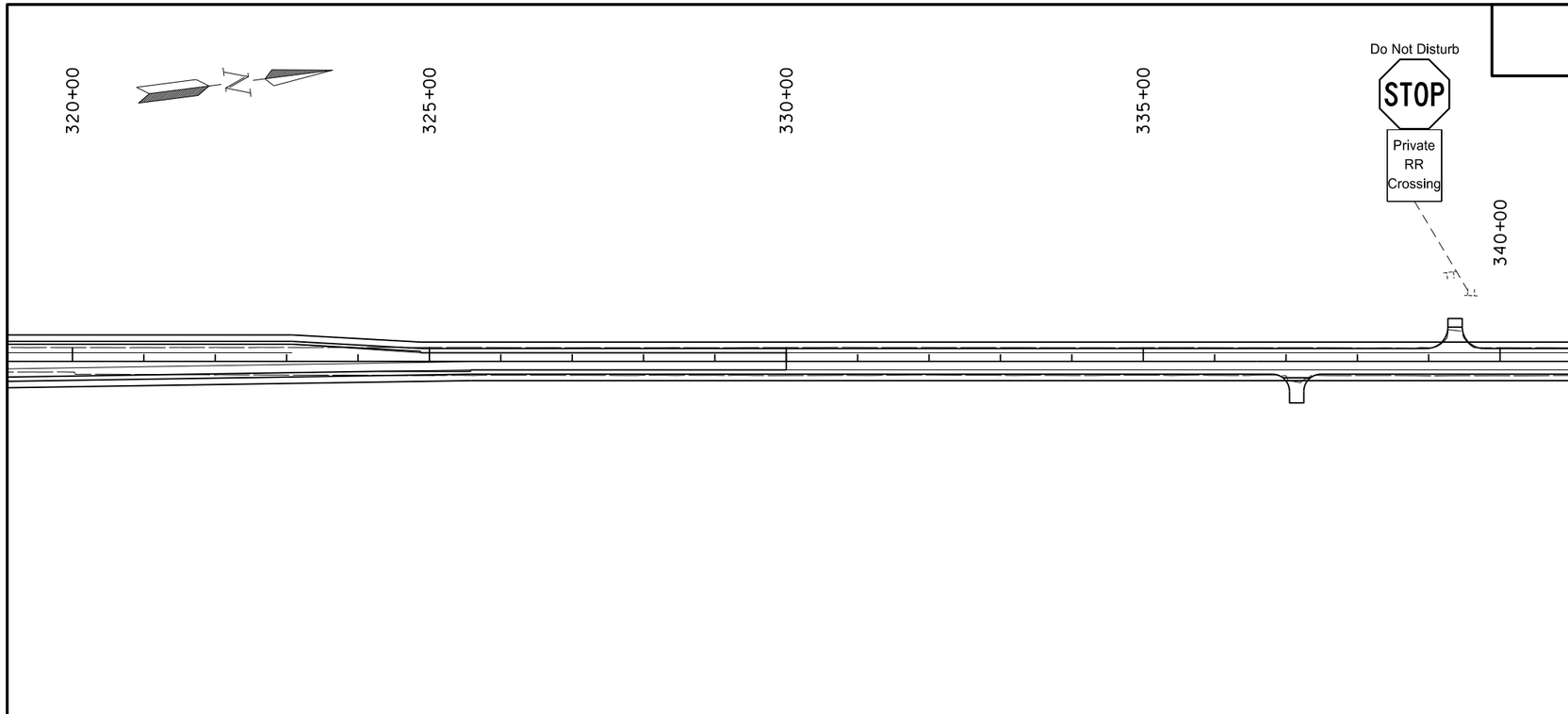

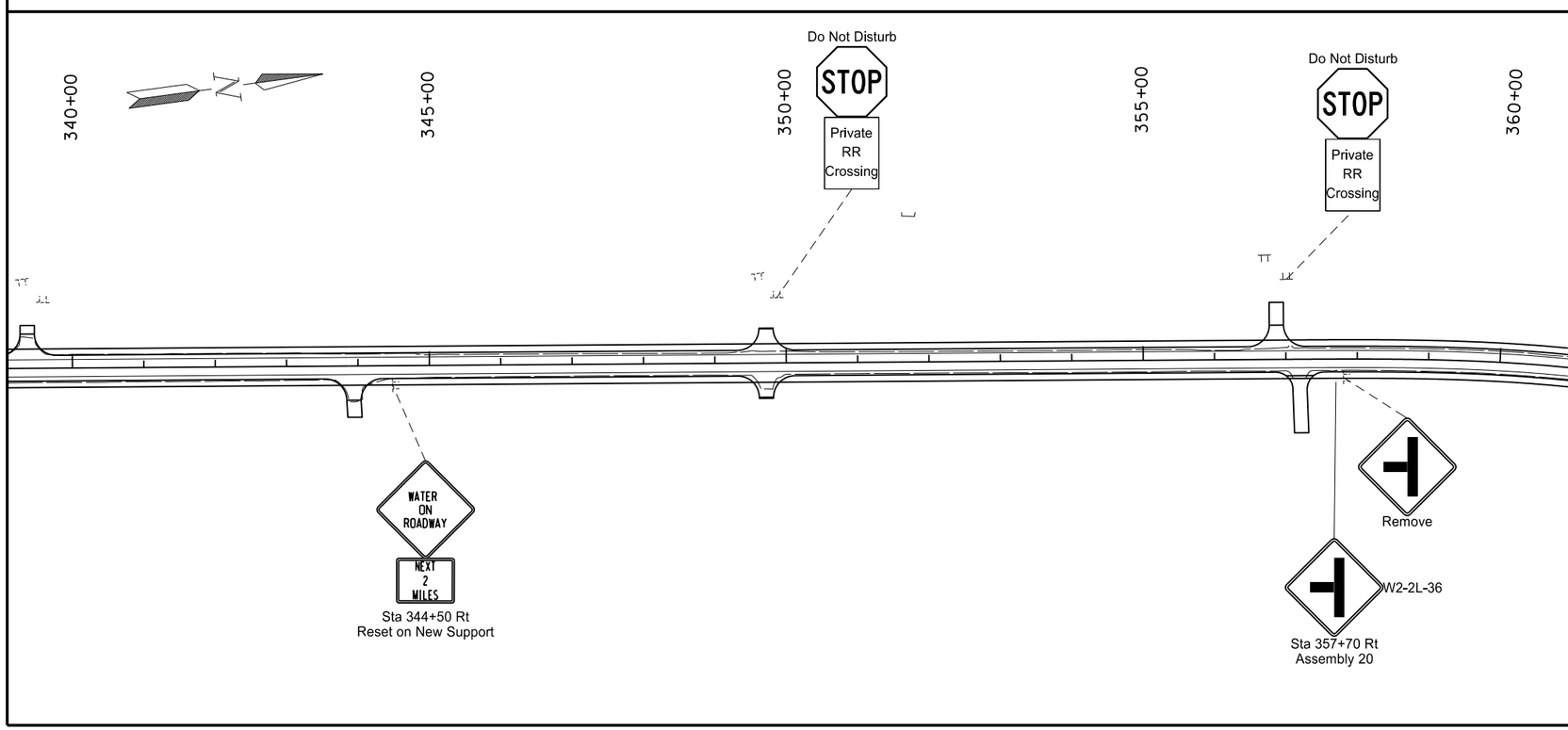

This document was originally issued and sealed by William Doerr, Registration Number PE- 7113, on 12/04/15 and the original document is stored at the North Dakota Department of Transportation

Sign Layout

ND 58

Jct 200 to Jct 1804

STATE	PROJECT NO.	SECTION NO.	SHEET NO.
ND	SOIB-7-058(013)000	110	12

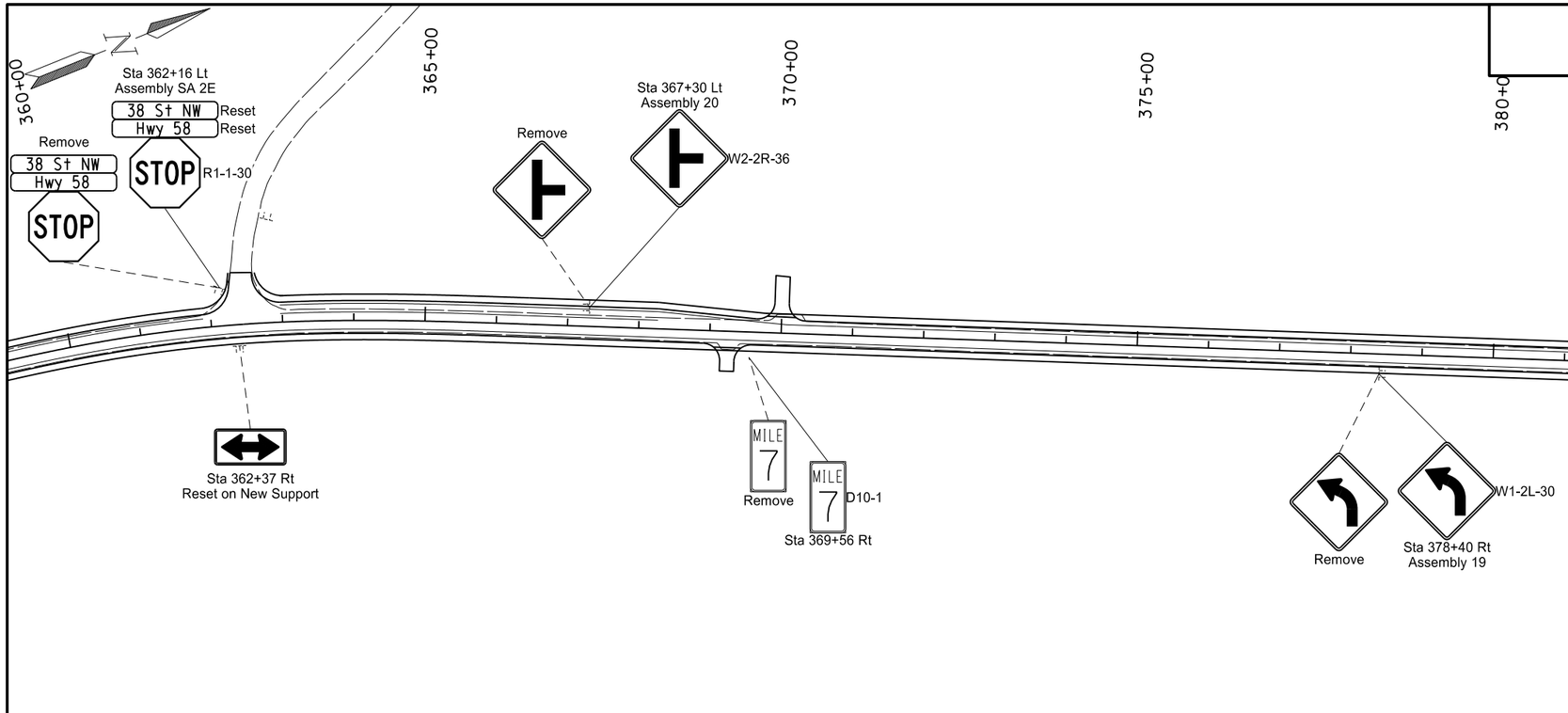

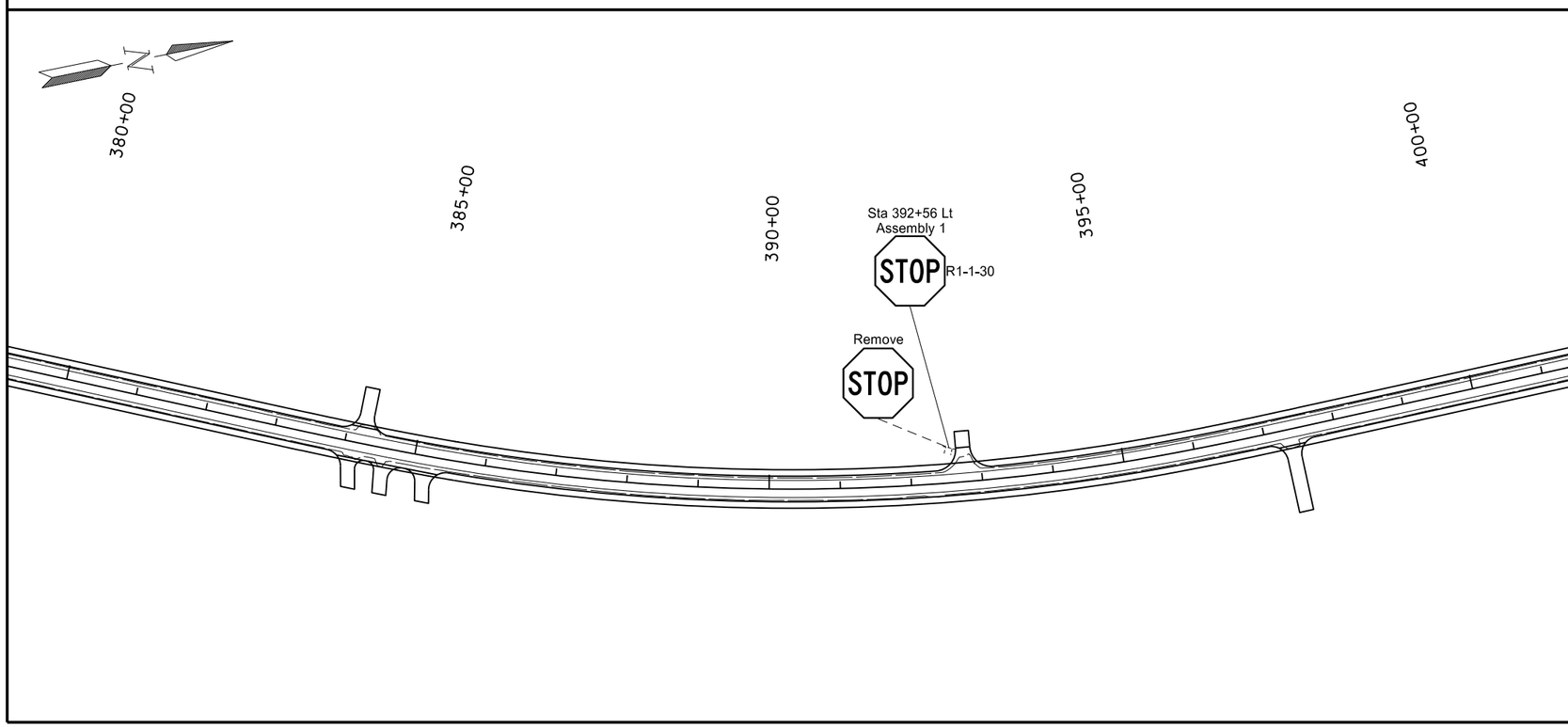

This document was originally issued and sealed by William Doerr, Registration Number PE- 7113, on 12/04/15 and the original document is stored at the North Dakota Department of Transportation

Sign Layout

ND 58

Jct 200 to Jct 1804

STATE	PROJECT NO.	SECTION NO.	SHEET NO.
ND	SOIB-7-058(013)000	110	13

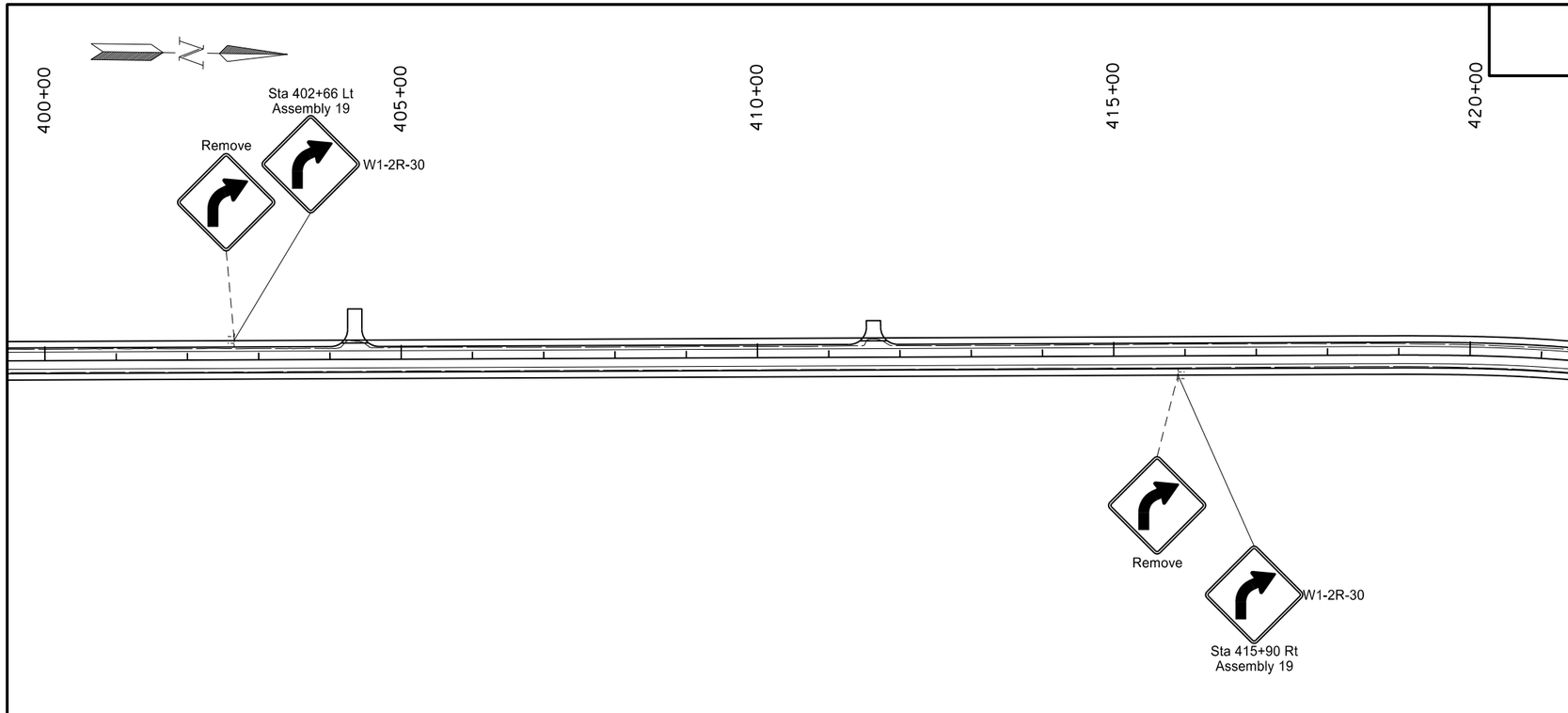

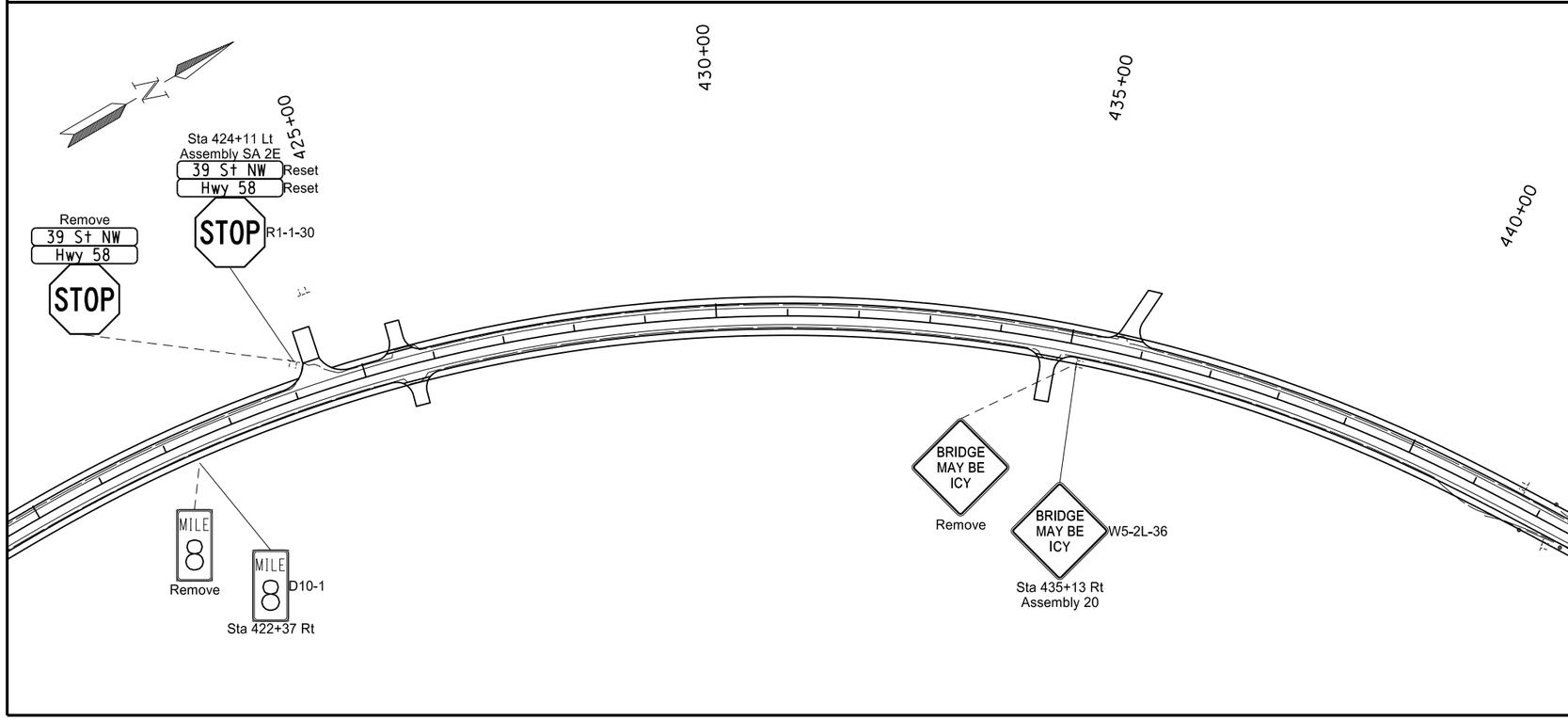

This document was originally issued and sealed by William Doerr, Registration Number PE- 7113, on 12/04/15 and the original document is stored at the North Dakota Department of Transportation

Sign Layout

ND 58

Jct 200 to Jct 1804

STATE	PROJECT NO.	SECTION NO.	SHEET NO.
ND	SOIB-7-058(013)000	110	14

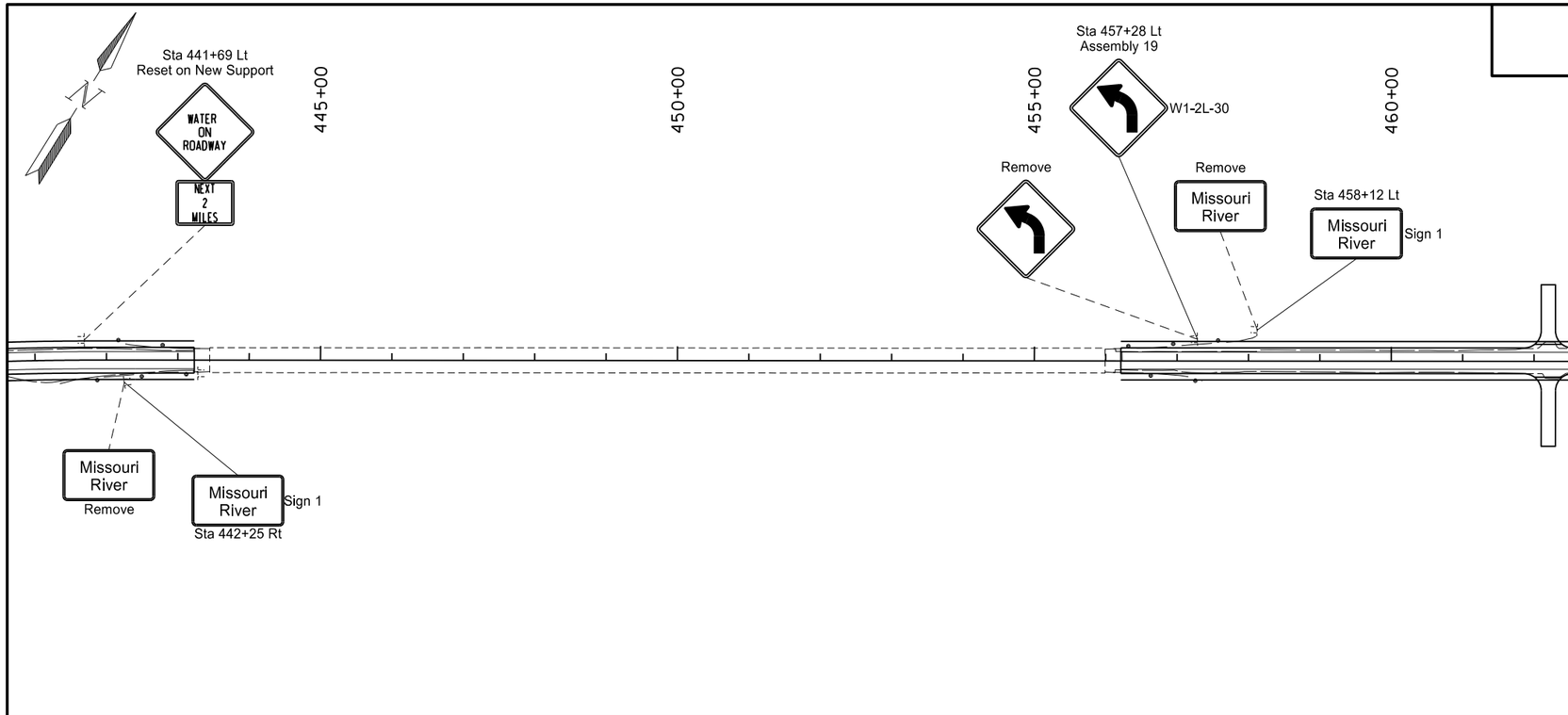

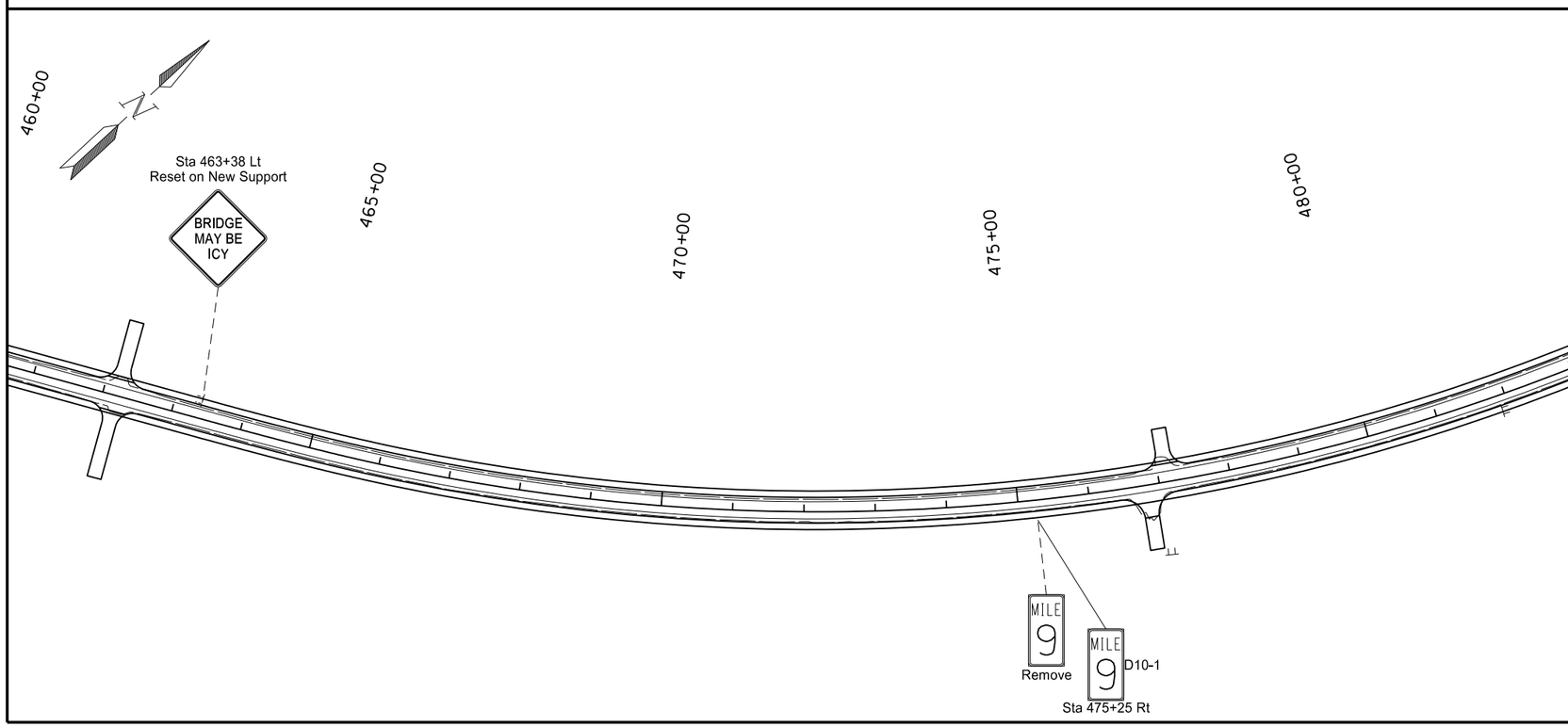

This document was originally issued and sealed by William Doerr, Registration Number PE- 7113, on 12/04/15 and the original document is stored at the North Dakota Department of Transportation

Sign Layout

ND 58

Jct 200 to Jct 1804

STATE	PROJECT NO.	SECTION NO.	SHEET NO.
ND	SOIB-7-058(013)000	110	15

SIGN NUMBER	Sign 1
WIDTH x HEIGHT	5'-0" x 3'-0"
BORDER WIDTH	1.25" (inset 0")
CORNER RADIUS	6"
MOUNTING	Ground
BACKGROUND	TYPE: IV Reflective
	COLOR: Green
LEGEND/BORDER	TYPE: IV Reflective
	COLOR: White

SYMBOL	X	Y	WID	HT	ANGLE

STATION(S):
442+25 Rt
458+12 Lt

AREA: 15.0 Sq.Ft.

BORDER
R=6"
TH=1.25"

FONT:
(1) ClearviewHwy-5-W

Dimensions are in inches.tenths

Letter locations are panel edge to lower left corner

PANEL STYLE: ND_Conv_Destination.ssl

LETTER POSITION (X)																			LENGTH	SIZE	SERIES
M	i	s	s	o	u	r	i												40.4	6/4.9	ClearviewHwy-5-W
9.8	17.5	20.6	25.9	31.4	38.1	44.4	48.8														
R	i	v	e	r															24.4	6/4.9	ClearviewHwy-5-W
17.8	24.2	27.1	33	39.4																	

This document was originally issued and sealed by William Doerr, Registration Number PE- 7113 , on 12/04/15 and the original document is stored at the North Dakota Department of Transportation

Special Signs

ND 58

Jct 200 to Jct 1804

STATE	PROJECT NO.	SECTION NO.	SHEET NO.
ND	SOIB-7-058(013)000	120	1

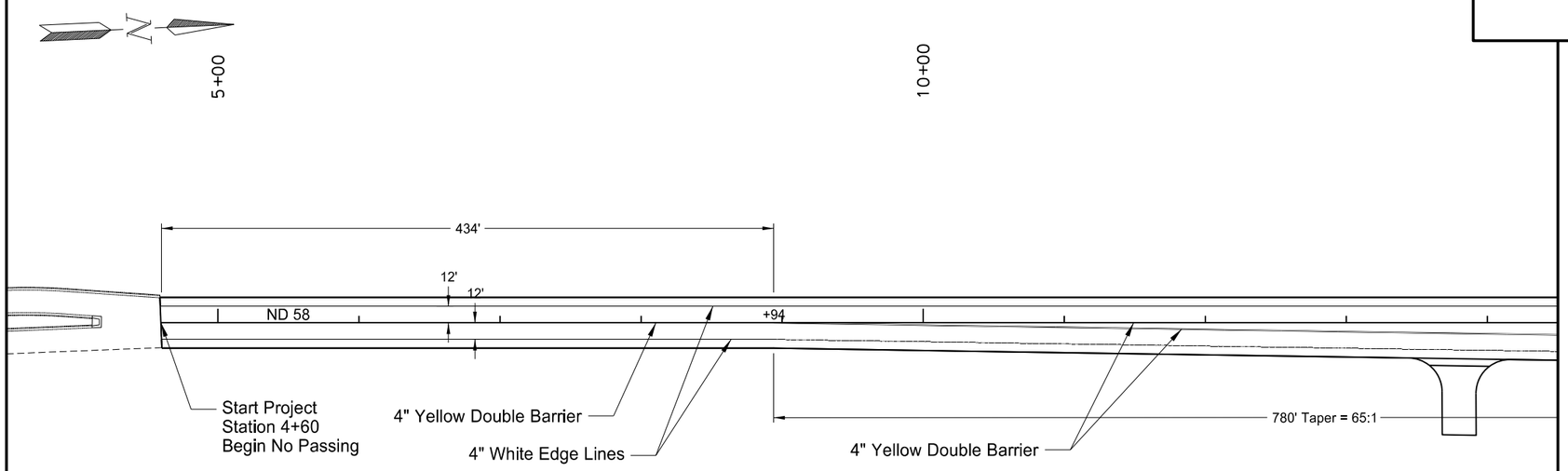

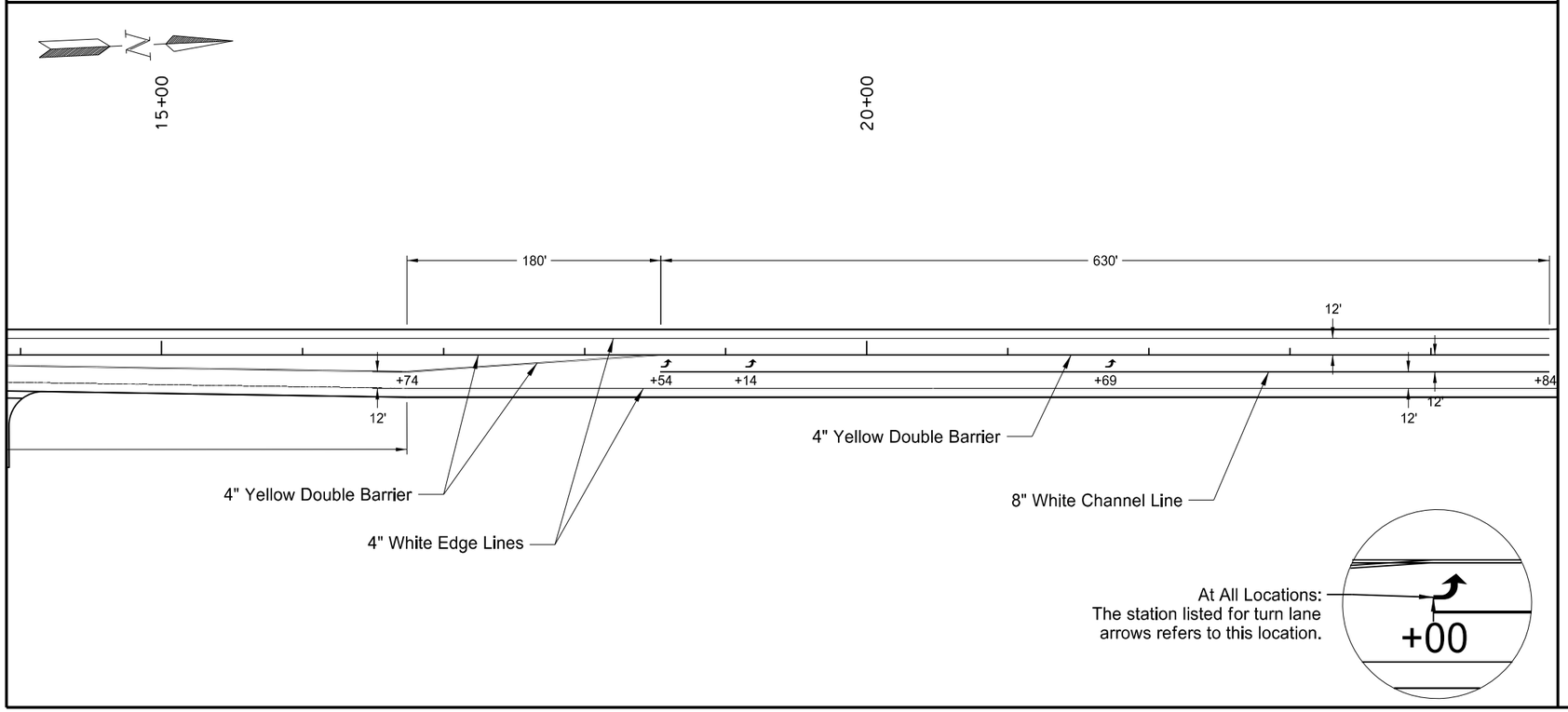

SPEC	CODE	BID ITEM	QUANTITY	UNIT
762	0122	PREFORMED PATTERNED PVMT MK-MESSAGE(GROOVED)		
		3 Left Turn Arrows - White	48	SF
762	1305	PREFORMED PATTERNED PVMT MK 4IN LINE-GROOVED		
		Yellow Double Barrier 4+60 - 8+94	868	LF
		Yellow Double Barrier 8+94 - 24+84	5100	LF
762	1309	PREFORMED PATTERNED PVMT MK 8IN LINE-GROOVED		
		18+54 - 24+84	630	LF

This document was originally issued and sealed by William Doerr, Registration Number PE- 7113, on 12/04/15 and the original document is stored at the North Dakota Department of Transportation

Pavement Marking

ND 58

Jct 200 to Jct 1804

STATE	PROJECT NO.	SECTION NO.	SHEET NO.
ND	SOIB-7-058(013)000	120	2

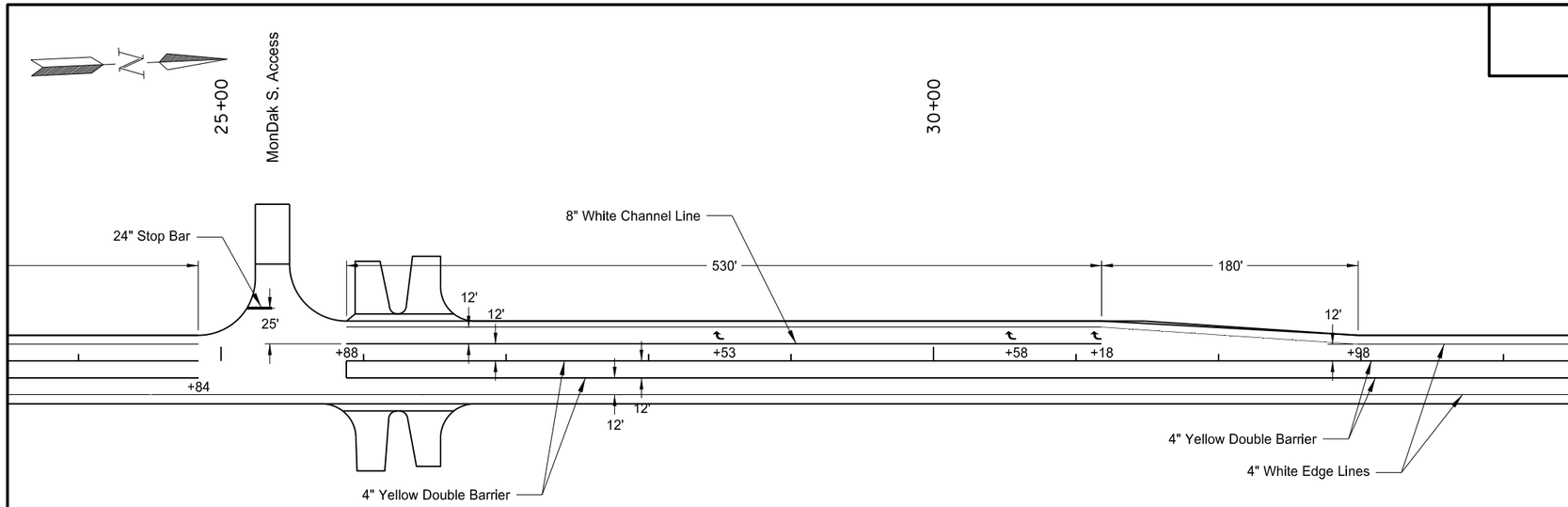

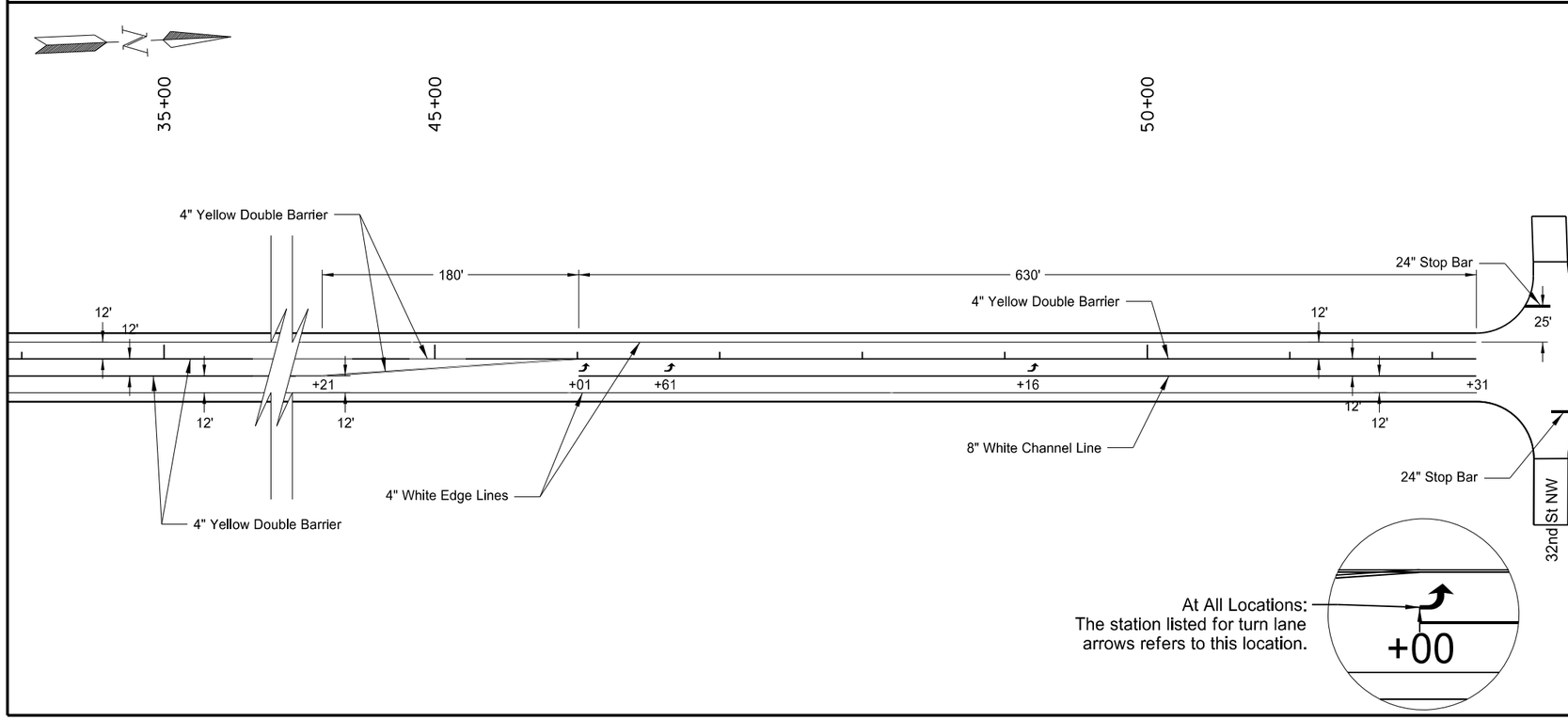

SPEC	CODE	BID ITEM	QUANTITY	UNIT
762	0122	PREFORMED PATTERNED PVMT MK-MESSAGE(GROOVED)		
		3 Right Turn Arrows - White	48	SF
		3 Left Turn Arrows - White	48	SF
762	1305	PREFORMED PATTERNED PVMT MK 4IN LINE-GROOVED		
		Yellow Double Barrier 25+88 - 32+98	2864	LF
		Yellow Double Barrier 32+98 - 44+21	4492	LF
		Yellow Double Barrier 44+21 - 52+31	1980	LF
762	1309	PREFORMED PATTERNED PVMT MK 8IN LINE-GROOVED		
		25+88 - 31+18	530	LF
		46+01 - 52+31	630	LF
762	1325	PREFORMED PATTERNED PVMT MK 24IN LINE-GROOVED		
		25+36 Lt	18	LF
		52+84 Lt	18	LF
		52+84 Rt	30	LF

This document was originally issued and sealed by William Doerr, Registration Number PE- 7113, on 12/04/15 and the original document is stored at the North Dakota Department of Transportation

Pavement Marking

ND 58

Jct 200 to Jct 1804

STATE	PROJECT NO.	SECTION NO.	SHEET NO.
ND	SOIB-7-058(013)000	120	3

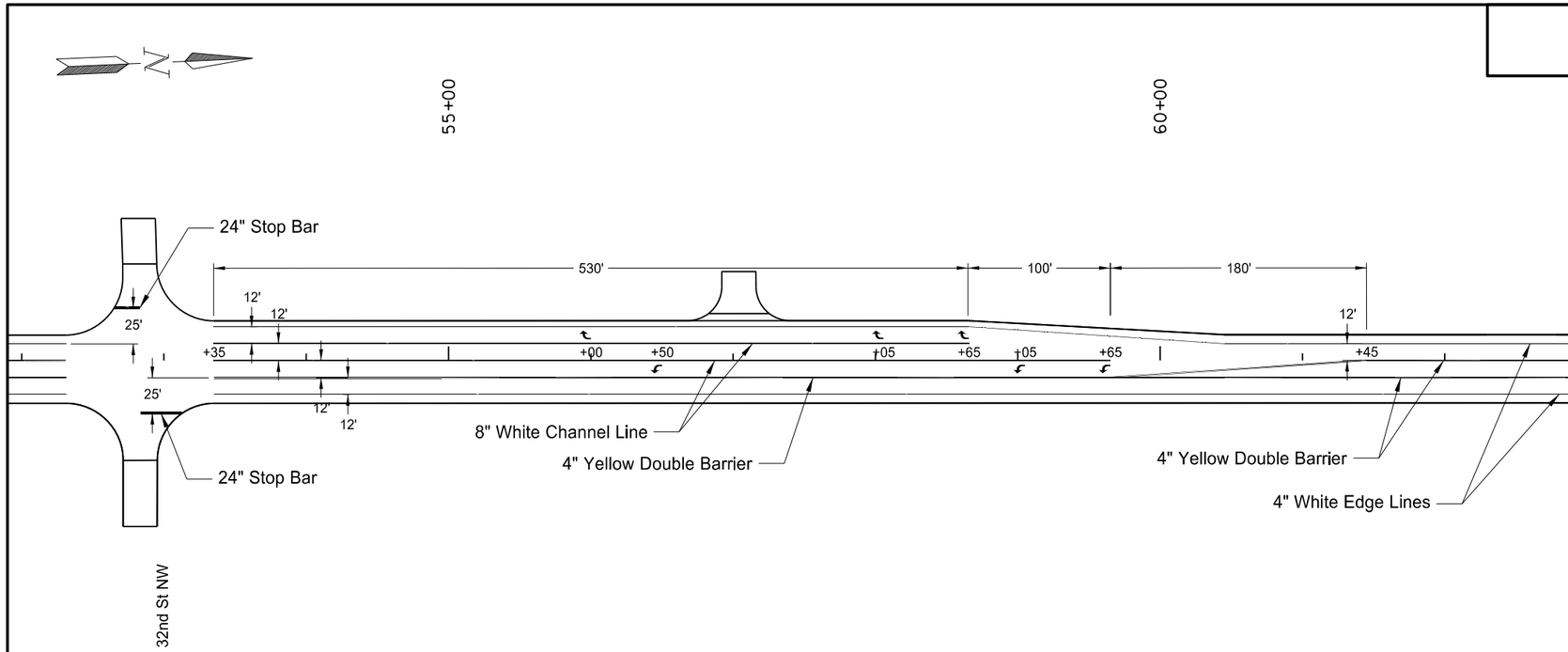

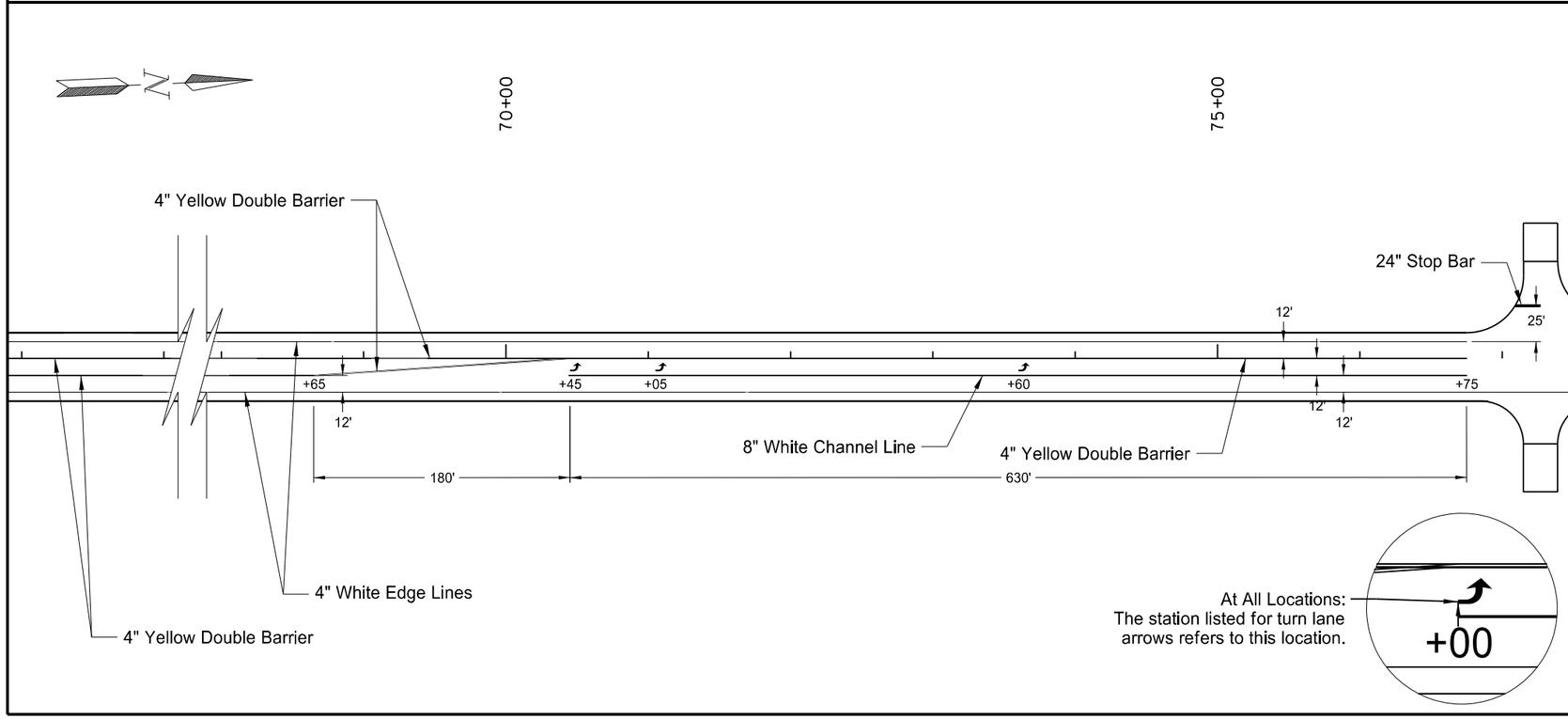

SPEC	CODE	BID ITEM	QUANTITY	UNIT
762	0122	PREFORMED PATTERNED PVMT MK-MESSAGE(GROOVED)		
		3 Right Turn Arrows - White	48	SF
		3 Left Turn Arrows - White	48	SF
		3 Left Turn Arrows - White	48	SF
762	1305	PREFORMED PATTERNED PVMT MK 4IN LINE-GROOVED		
		Yellow Double Barrier 53+35 - 61+45	1980	LF
		Yellow Double Barrier 61+45 - 68+65	2880	LF
		Yellow Double Barrier 68+65 - 76+75	1980	LF
762	1309	PREFORMED PATTERNED PVMT MK 8IN LINE-GROOVED		
		53+35 - 59+65	1160	LF
		70+45 - 76+75	630	LF
762	1325	PREFORMED PATTERNED PVMT MK 24IN LINE-GROOVED		
		77+27 Rt	18	LF

This document was originally issued and sealed by William Doerr, Registration Number PE- 7113, on 12/04/15 and the original document is stored at the North Dakota Department of Transportation

Pavement Marking

ND 58

Jct 200 to Jct 1804

STATE	PROJECT NO.	SECTION NO.	SHEET NO.
ND	SOIB-7-058(013)000	120	4

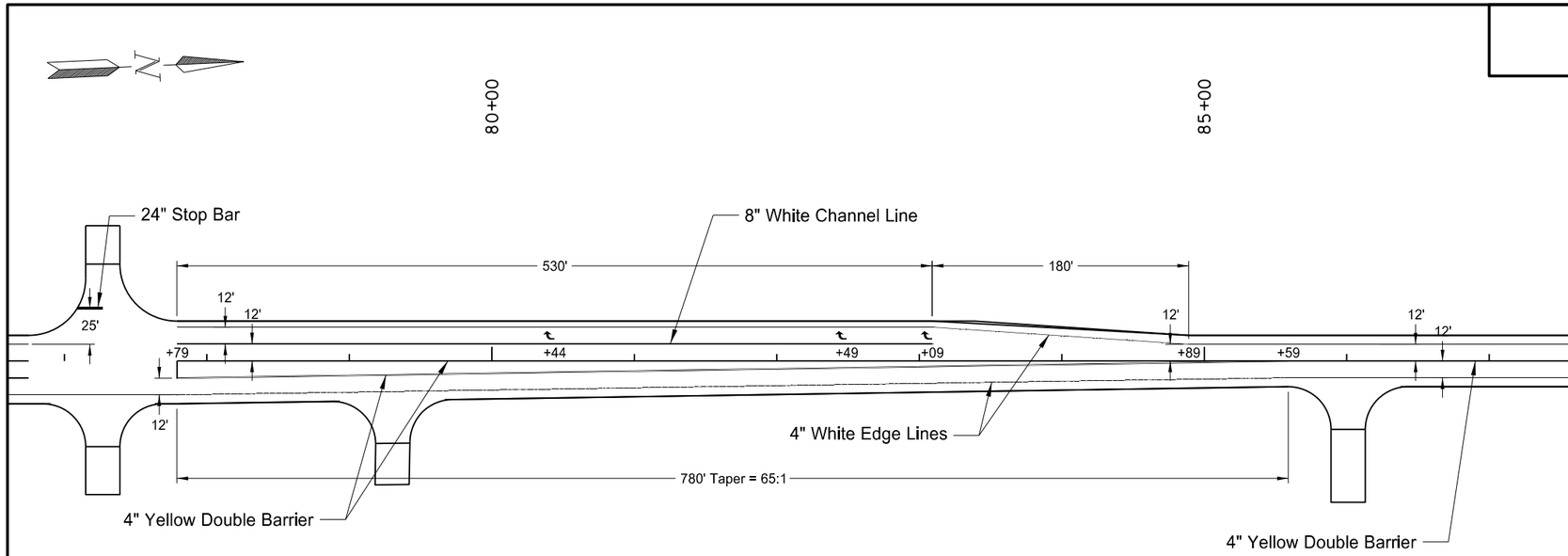

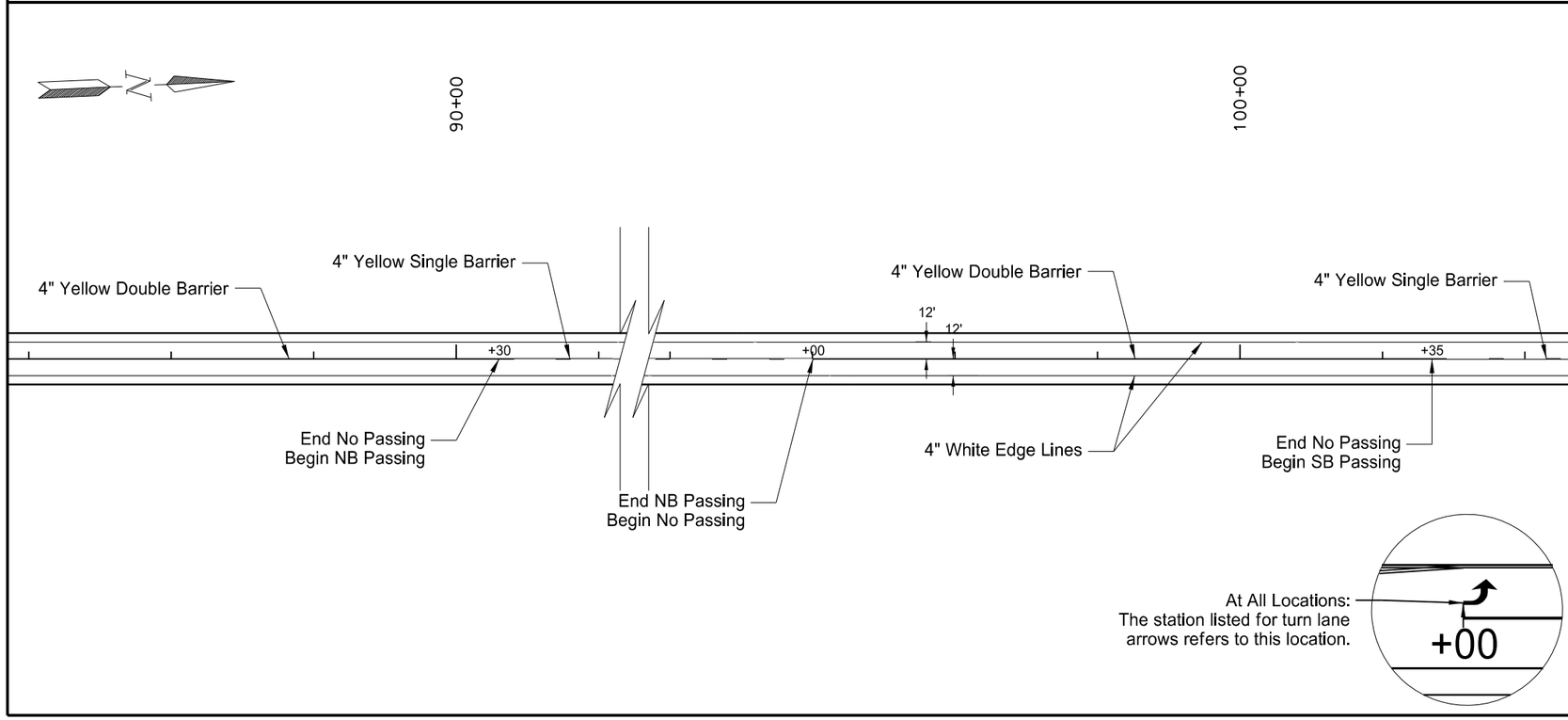

SPEC	CODE	BID ITEM	QUANTITY	UNIT
762	0122	PREFORMED PATTERNED PVMT MK-MESSAGE(GROOVED)		
		3 Right Turn Arrows - White	48	SF
762	1305	PREFORMED PATTERNED PVMT MK 4IN LINE-GROOVED		
		Yellow Double Barrier 77+79 - 85+59	3144	LF
		Yellow Double Barrier 85+59 - 90+30	942	LF
		Yellow Single Barrier 90+30 - 97+00	838	LF
		Yellow Double Barrier 97+00 - 101+35	870	LF
		Yellow Single Barrier 101+35 - 104+00	331	LF
762	1309	PREFORMED PATTERNED PVMT MK 8IN LINE-GROOVED		
		53+35 - 58+65	1060	LF
		71+45 - 76+75	530	LF

This document was originally issued and sealed by William Doerr, Registration Number PE- 7113, on 12/04/15 and the original document is stored at the North Dakota Department of Transportation

Pavement Marking

ND 58

Jct 200 to Jct 1804

STATE	PROJECT NO.	SECTION NO.	SHEET NO.
ND	SOIB-7-058(013)000	120	5

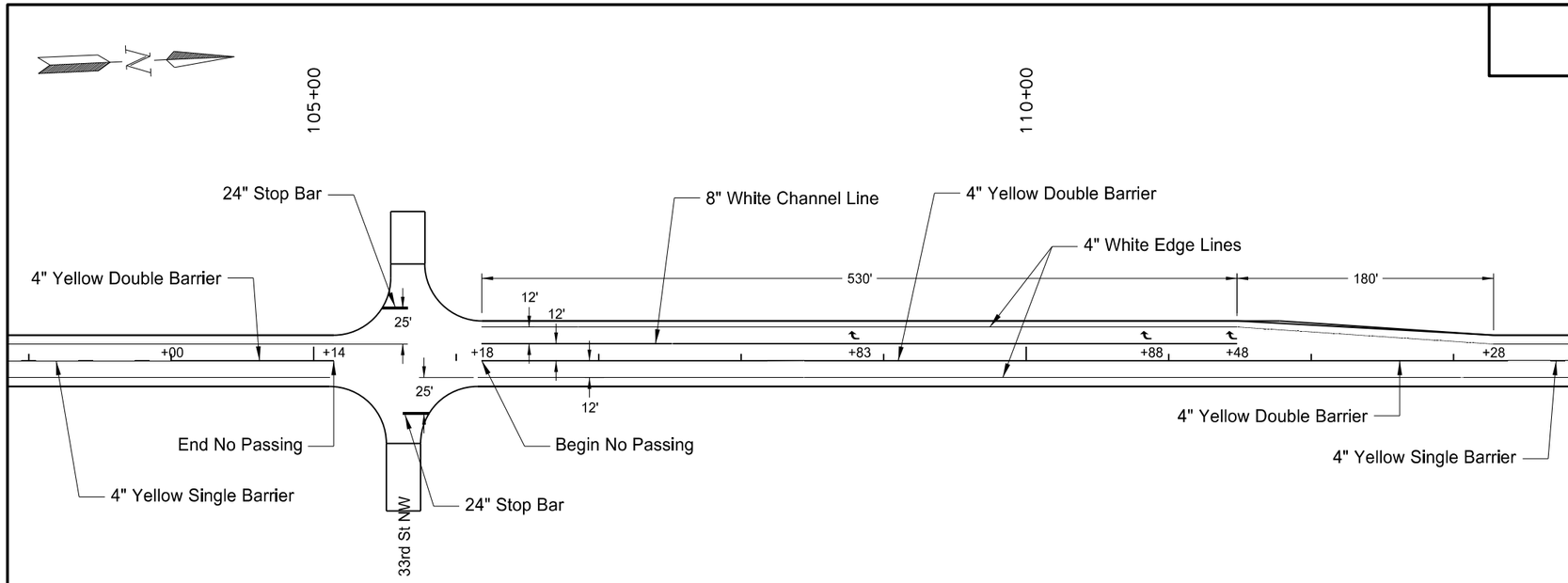

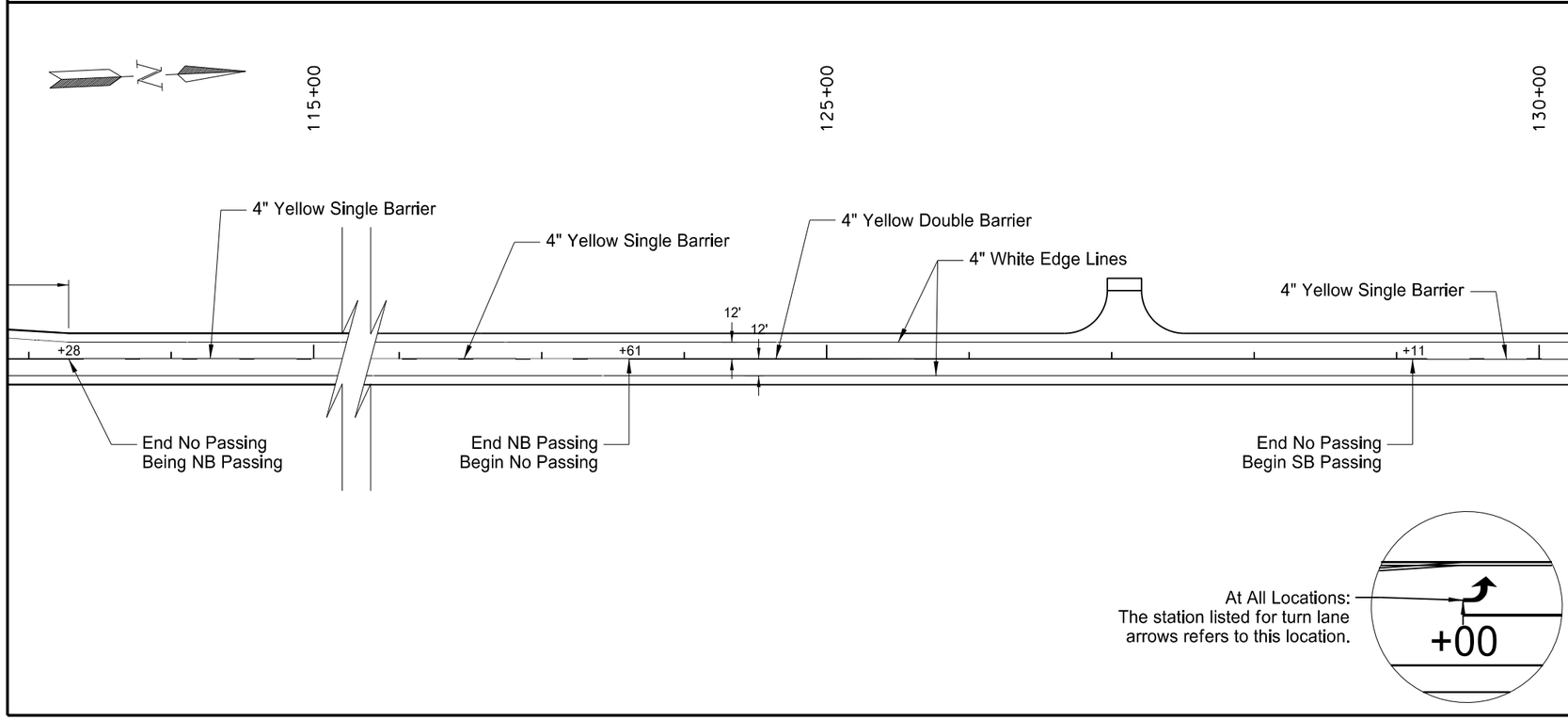

SPEC	CODE	BID ITEM	QUANTITY	UNIT
762	0122	PREFORMED PATTERNED PVMT MK-MESSAGE(GROOVED)		
		3 Right Turn Arrows - White	48	SF
762	1305	PREFORMED PATTERNED PVMT MK 4IN LINE-GROOVED		
		Yellow Double Barrier 104+00 - 105+14	228	LF
		Yellow Double Barrier 106+18 - 113+28	1420	LF
		Yellow Single Barrier 113+28 - 123+61	1291	LF
		Yellow Double Barrier 123+61 - 129+11	1100	LF
762	1309	PREFORMED PATTERNED PVMT MK 8IN LINE-GROOVED		
		106+18 - 111+48	530	LF
762	1325	PREFORMED PATTERNED PVMT MK 24IN LINE-GROOVED		
		105+62 Lt & Rt	36	LF

This document was originally issued and sealed by William Doerr, Registration Number PE- 7113, on 12/04/15 and the original document is stored at the North Dakota Department of Transportation

Pavement Marking

ND 58

Jct 200 to Jct 1804

STATE	PROJECT NO.	SECTION NO.	SHEET NO.
ND	SOIB-7-058(013)000	120	6

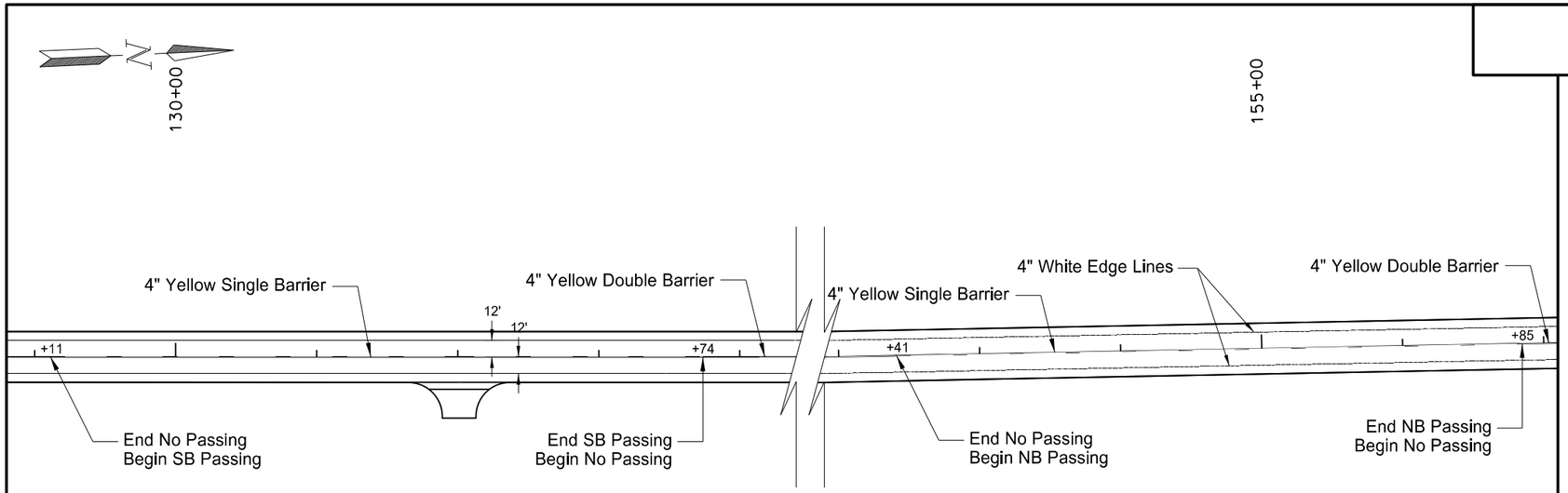

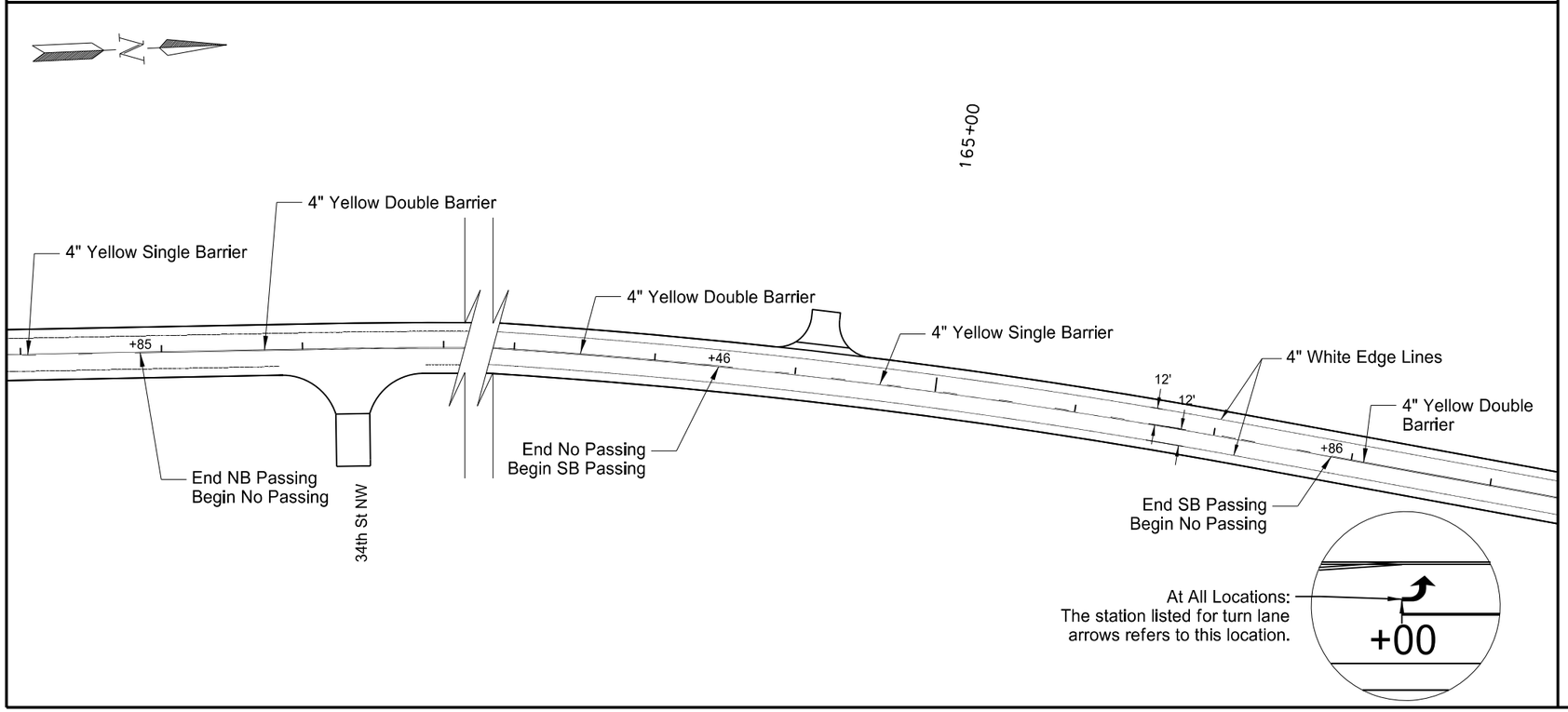

SPEC	CODE	BID ITEM	QUANTITY	UNIT
762	1305	PREFORMED PATTERNED PVMT MK 4IN LINE-GROOVED		
		Yellow Single Barrier 129+11 - 133+74	579	LF
		Yellow Double Barrier 133+74 - 152+41	3734	LF
		Yellow Single Barrier 152+41 - 156+85	555	LF
		Yellow Double Barrier 156+85 - 163+46	1322	LF
		Yellow Single Barrier 163+46 - 167+86	550	LF

This document was originally issued and sealed by William Doerr, Registration Number PE- 7113, on 12/04/15 and the original document is stored at the North Dakota Department of Transportation

Pavement Marking

ND 58

Jct 200 to Jct 1804

STATE	PROJECT NO.	SECTION NO.	SHEET NO.
ND	SOIB-7-058(013)000	120	7

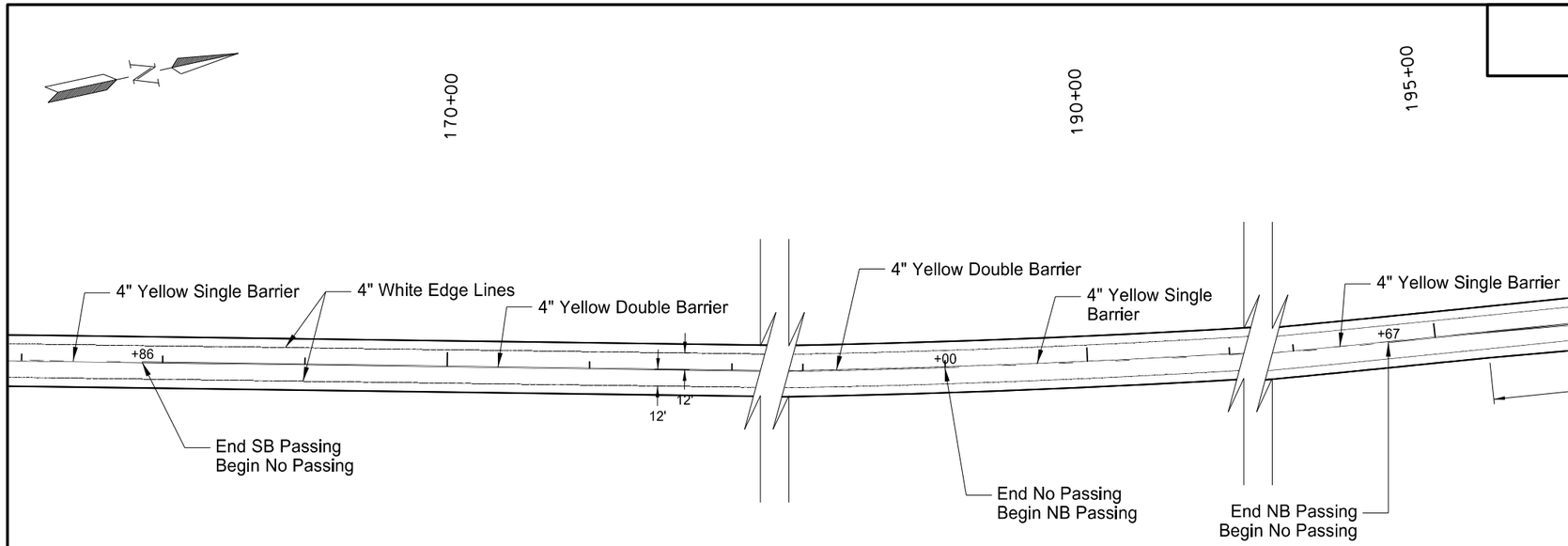

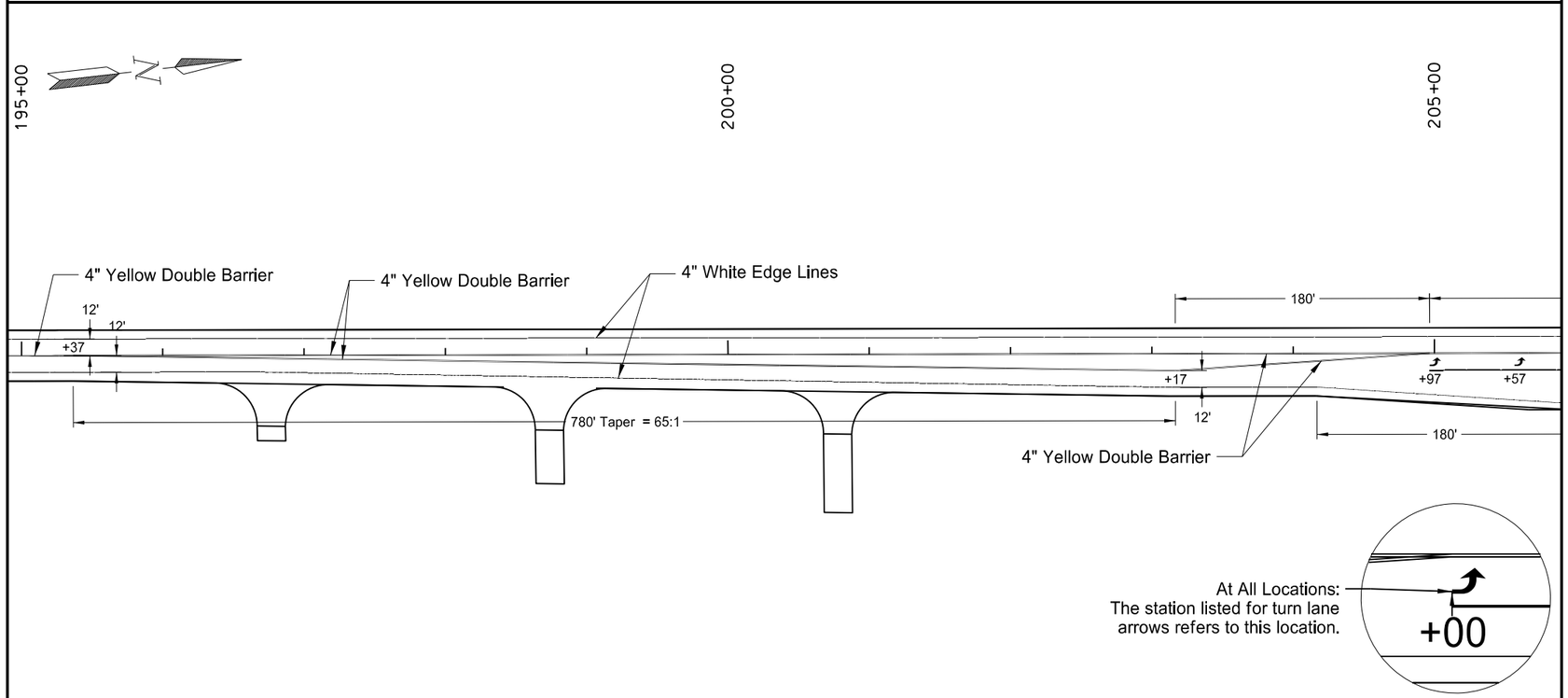

SPEC	CODE	BID ITEM	QUANTITY	UNIT
762	1305	PREFORMED PATTERNED PVMT MK 4IN LINE-GROOVED		
		Yellow Double Barrier 167+86 - 189+00	4228	LF
		Yellow Single Barrier 189+00 - 194+67	709	LF
		Yellow Double Barrier 194+67 - 195+37	140	LF
		Yellow Double Barrier 195+37 - 204+97	3840	LF

This document was originally issued and sealed by William Doerr, Registration Number PE- 7113, on 12/04/15 and the original document is stored at the North Dakota Department of Transportation

Pavement Marking

ND 58

Jct 200 to Jct 1804

STATE	PROJECT NO.	SECTION NO.	SHEET NO.
ND	SOIB-7-058(013)000	120	8

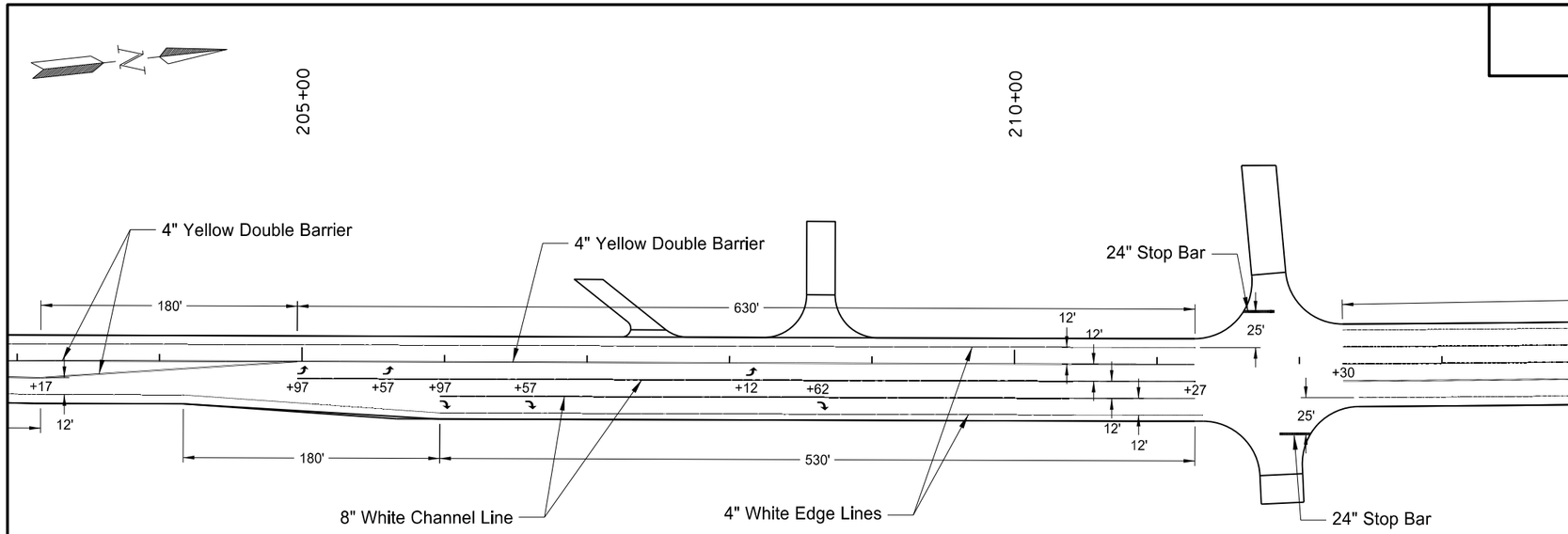

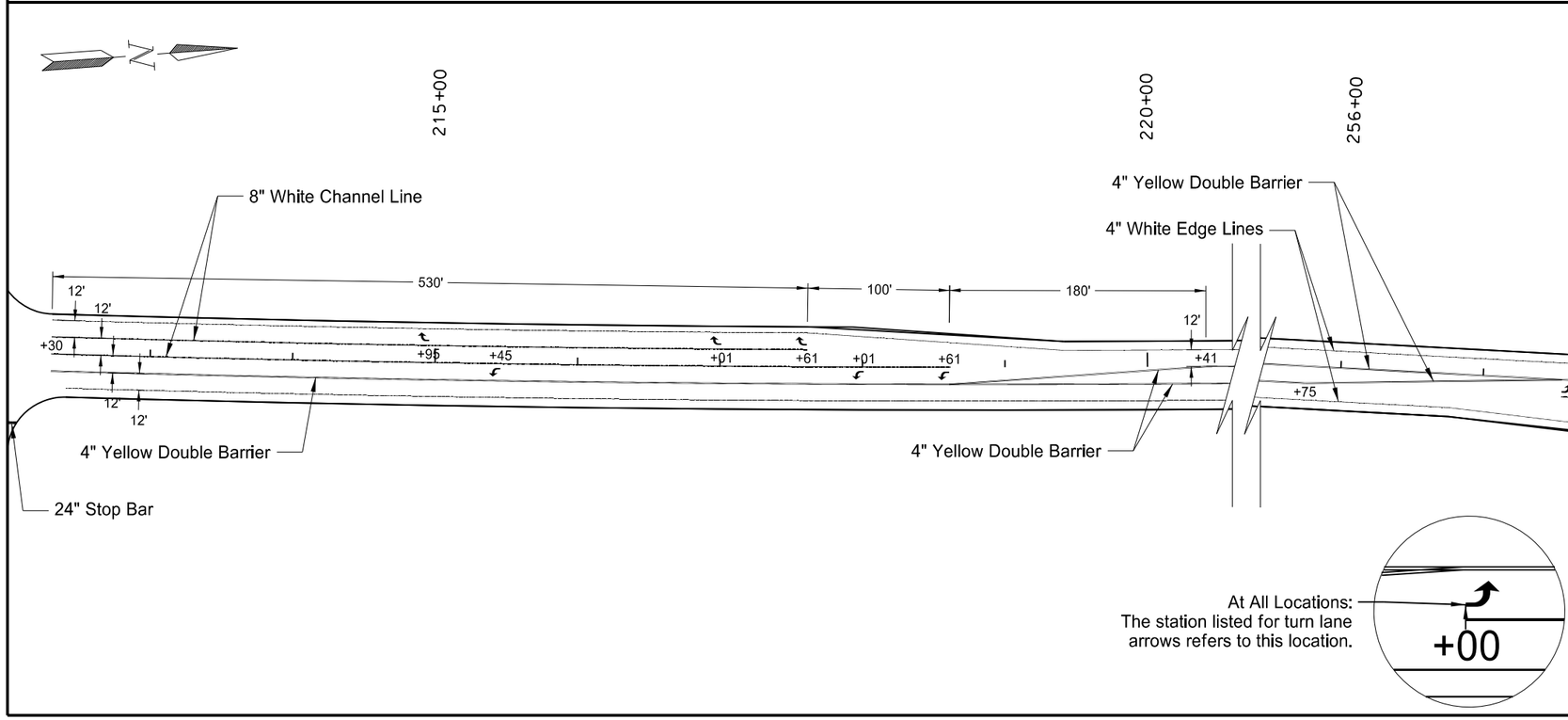

SPEC	CODE	BID ITEM	QUANTITY	UNIT
762	0122	PREFORMED PATTERNED PVMT MK-MESSAGE(GROOVED)		
		6 Left Turn Arrows - White	96	SF
		6 Right Turn Arrows - White	96	SF
762	1305	PREFORMED PATTERNED PVMT MK 4IN LINE-GROOVED		
		Yellow Double Barrier 204+97 - 211+27	1260	LF
		Yellow Double Barrier 212+30 - 220+41	1982	LF
		Yellow Double Barrier 220+41 - 255+75	14136	LF
762	1309	PREFORMED PATTERNED PVMT MK 8IN LINE-GROOVED		
		204+97 - 211+27	1160	LF
		212+30 - 218+61	1160	LF
762	1325	PREFORMED PATTERNED PVMT MK 24IN LINE-GROOVED		
		211+84 Lt	20	LF
		211+84 Rt	22	LF

This document was originally issued and sealed by William Doerr, Registration Number PE- 7113, on 12/04/15 and the original document is stored at the North Dakota Department of Transportation

Pavement Marking

ND 58

Jct 200 to Jct 1804

STATE	PROJECT NO.	SECTION NO.	SHEET NO.
ND	SOIB-7-058(013)000	120	9

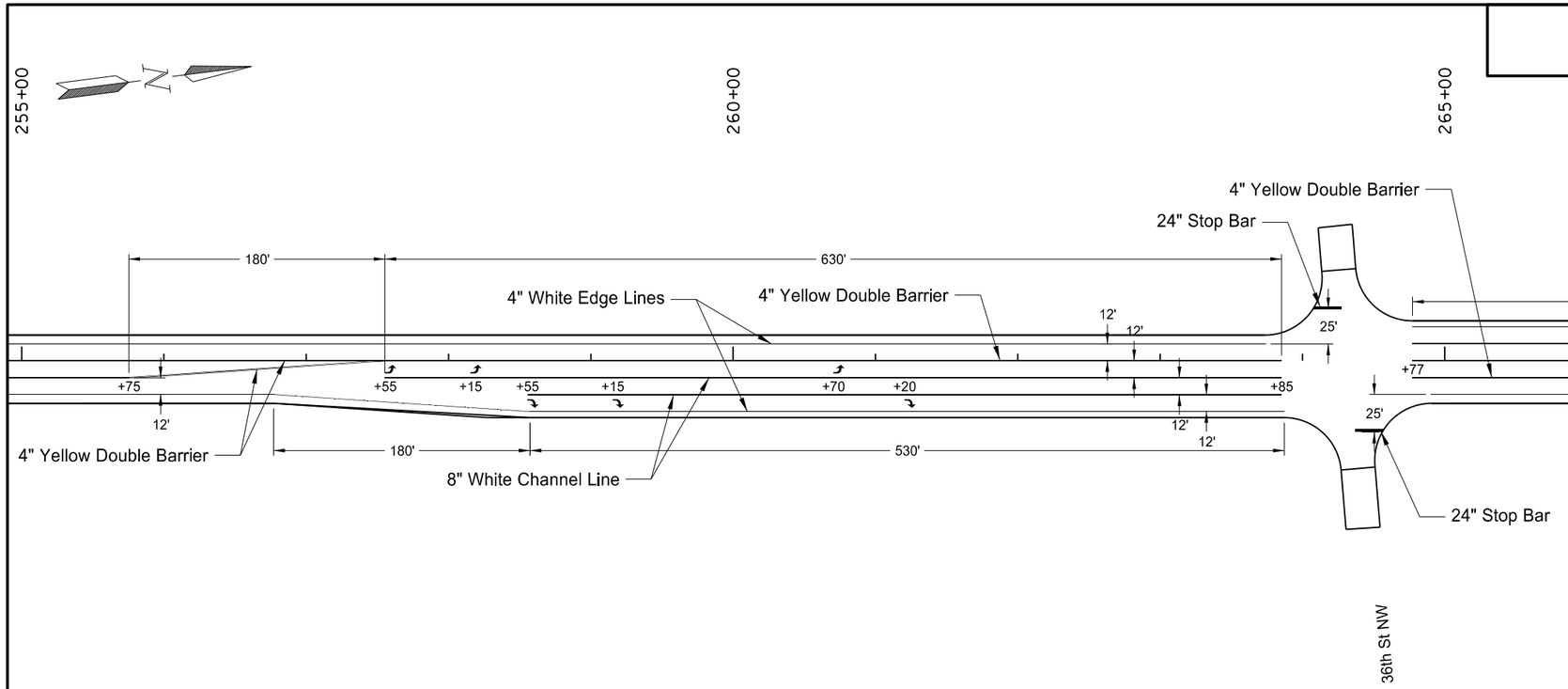

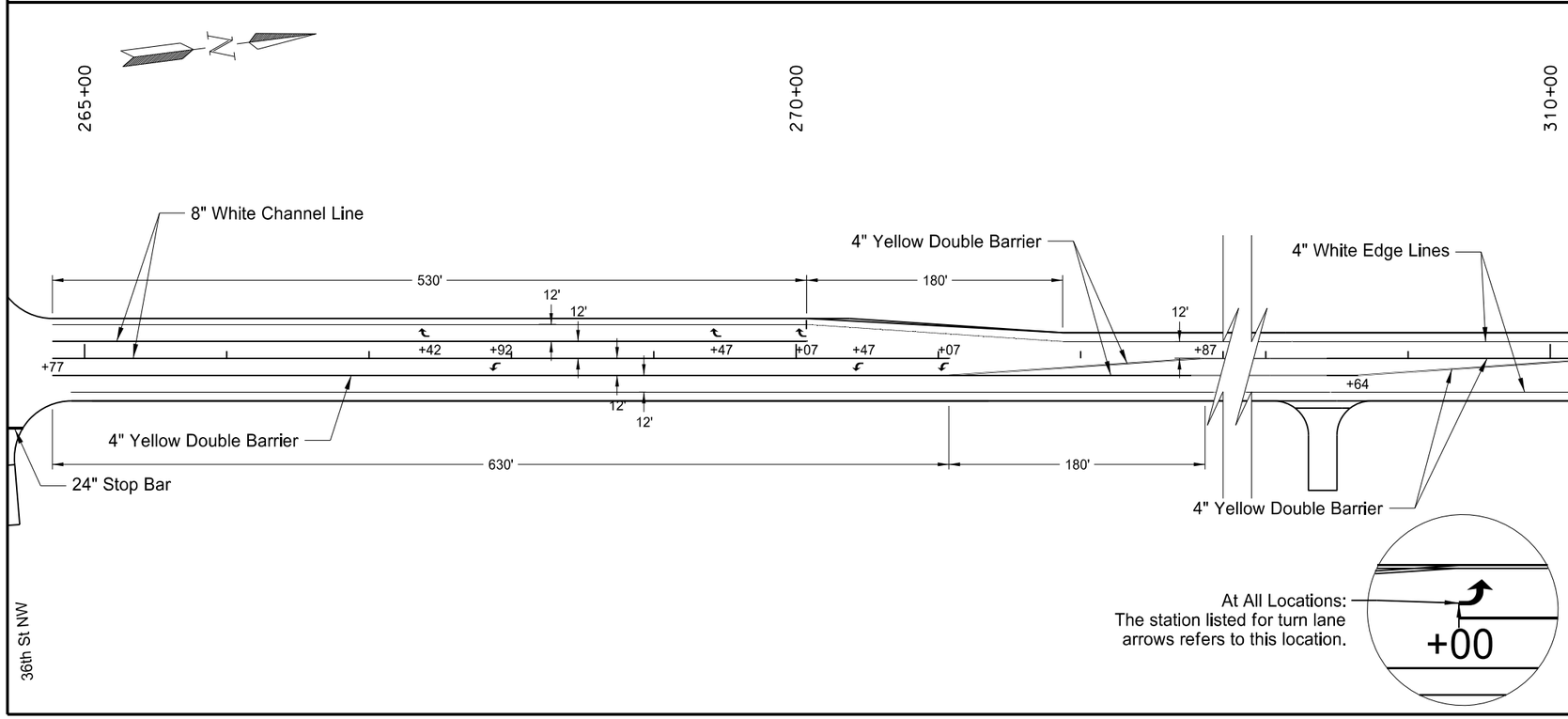

SPEC	CODE	BID ITEM	QUANTITY	UNIT
762	0122	PREFORMED PATTERNED PVMT MK-MESSAGE(GROOVED)		
		6 Right Turn Arrows - White	96	SF
		6 Left Turn Arrows - White	96	SF
762	1305	PREFORMED PATTERNED PVMT MK 4IN LINE-GROOVED		
		Yellow Double Barrier 255+75 - 263+85	1980	LF
		Yellow Double Barrier 264+77 - 272+87	1980	LF
		Yellow Double Barrier 272+87 - 308+64	14308	LF
762	1309	PREFORMED PATTERNED PVMT MK 8IN LINE-GROOVED		
		257+55 - 263+85	1160	LF
		264+77 - 271+07	1160	LF
762	1325	PREFORMED PATTERNED PVMT MK 24IN LINE-GROOVED		
		264+31 Lt	20	LF
		264+31 Rt	20	LF

This document was originally issued and sealed by William Doerr, Registration Number PE- 7113, on 12/04/15 and the original document is stored at the North Dakota Department of Transportation

Pavement Marking

ND 58

Jct 200 to Jct 1804

STATE	PROJECT NO.	SECTION NO.	SHEET NO.
ND	SOIB-7-058(013)000	120	10

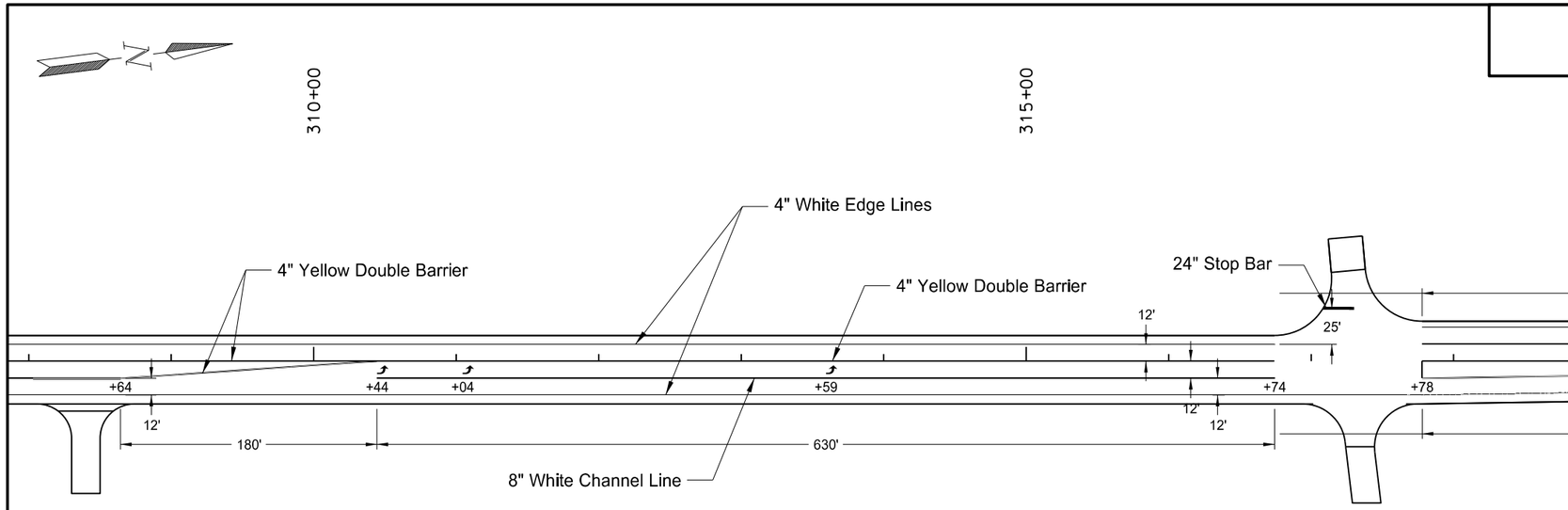

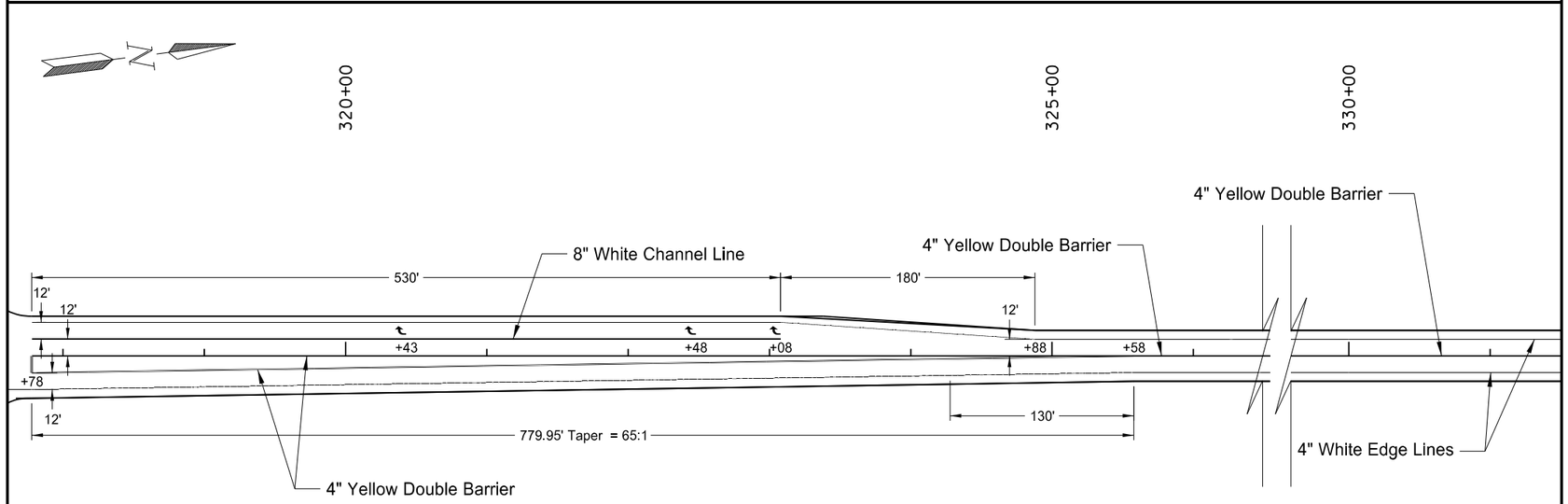

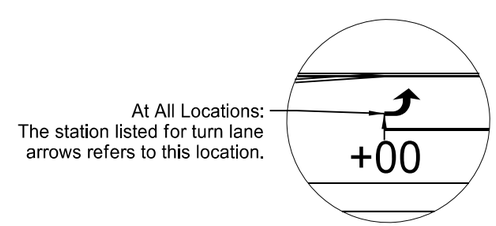

SPEC	CODE	BID ITEM	QUANTITY	UNIT
762	0122	PREFORMED PATTERNED PVMT MK-MESSAGE(GROOVED)		
		3 Left Turn Arrows - White	48	SF
		3 Right Turn Arrows - White	48	SF
762	1305	PREFORMED PATTERNED PVMT MK 4IN LINE-GROOVED		
		Yellow Double Barrier 308+64 - 316+74	1980	LF
		Yellow Double Barrier 317+78 - 325+58	3144	LF
		Yellow Double Barrier 325+58 - 330+00	884	LF
		White Edge Lines 4+60 - 330+00 = 65080 LF	65080	LF
762	1309	PREFORMED PATTERNED PVMT MK 8IN LINE-GROOVED		
		310+44 - 316+74	630	LF
		317+78 - 323+08	530	LF
762	1325	PREFORMED PATTERNED PVMT MK 24IN LINE-GROOVED		
		317+41 Lt	20	LF

This document was originally issued and sealed by William Doerr, Registration Number PE- 7113, on 12/04/15 and the original document is stored at the North Dakota Department of Transportation

Pavement Marking

ND 58

Jct 200 to Jct 1804

STATE	PROJECT NO.	SECTION NO.	SHEET NO.
ND	SOIB-7-058(013)000	120	11

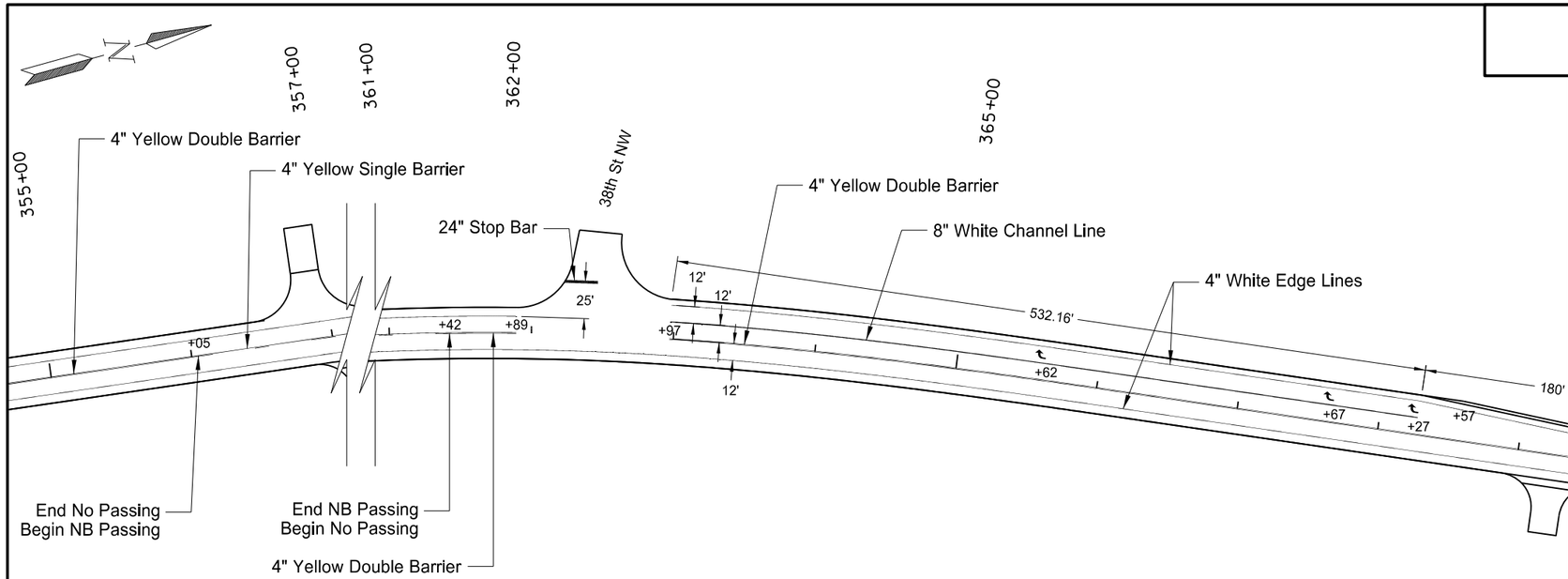

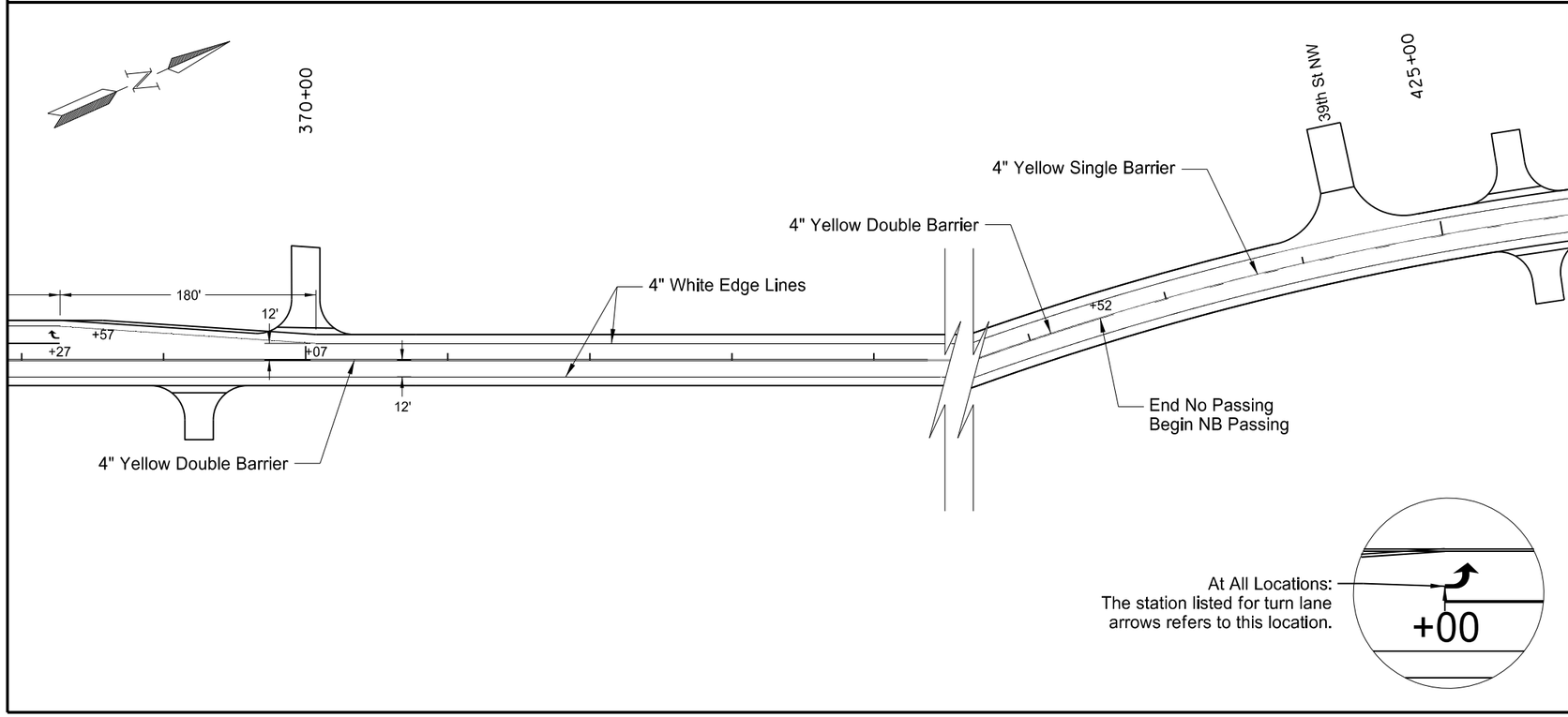

SPEC	CODE	BID ITEM	QUANTITY	UNIT
762	0112	EPOXY PVMT MK MESSAGE		
		3 Right Turn Arrows - White	48	SF
762	0113	EPOXY PVMT MK 4IN LINE		
		Yellow Double Barrier 330+00 - 356+05	5210	LF
		Yellow Single Barrier 356+05 - 361+42	671	LF
		Yellow Double Barrier 361+42 - 361+89	94	LF
		Yellow Double Barrier 362+97 - 370+07	1420	LF
		Yellow Double Barrier 370+07 - 422+52	10490	LF
762	0115	EPOXY PVMT MK 8IN LINE		
		362+97 - 368+27	530	LF
762	0117	EPOXY PVMT MK 24IN LINE		
		362+45 Lt	23	LF

This document was originally issued and sealed by William Doerr, Registration Number PE- 7113, on 12/04/15 and the original document is stored at the North Dakota Department of Transportation

Pavement Marking

ND 58

Jct 200 to Jct 1804

STATE	PROJECT NO.	SECTION NO.	SHEET NO.
ND	SOIB-7-058(013)000	120	12

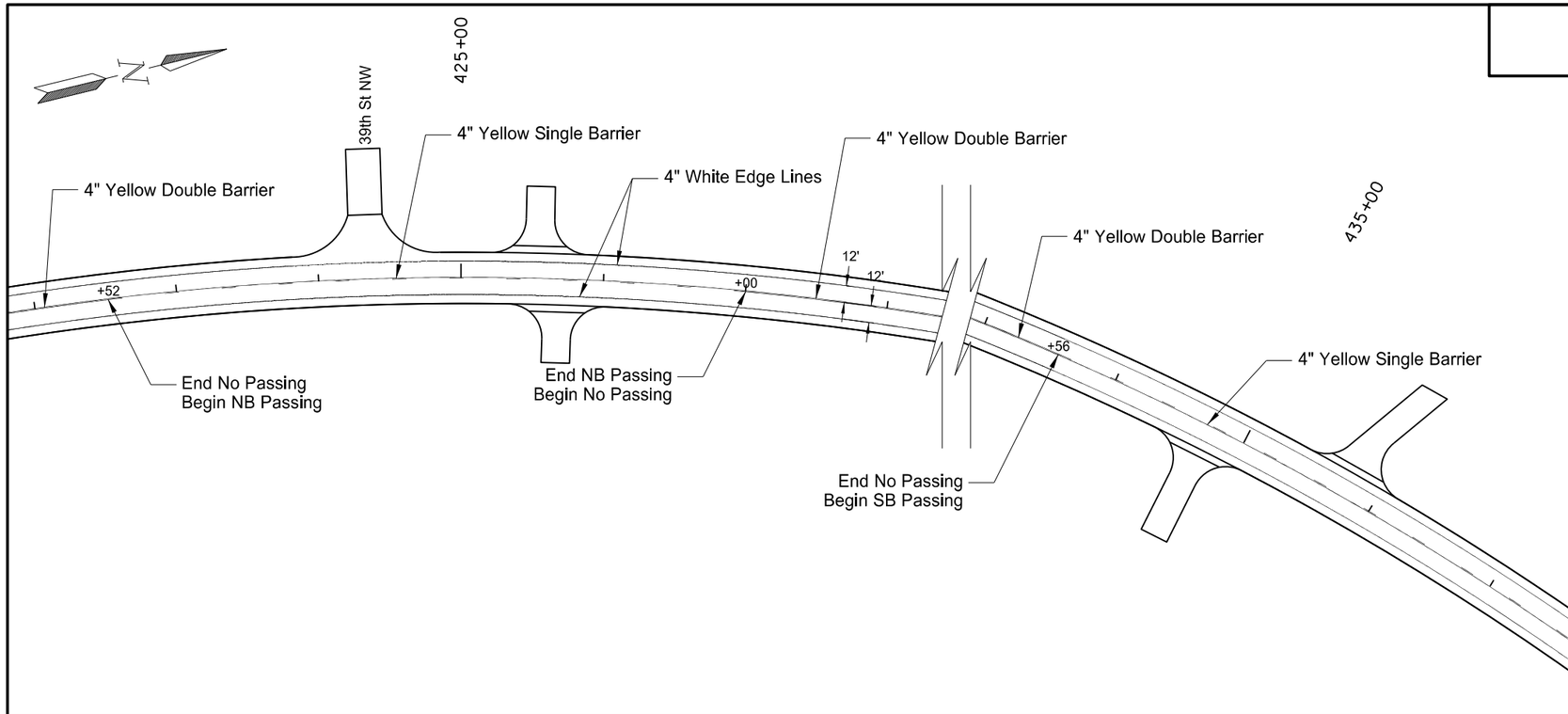

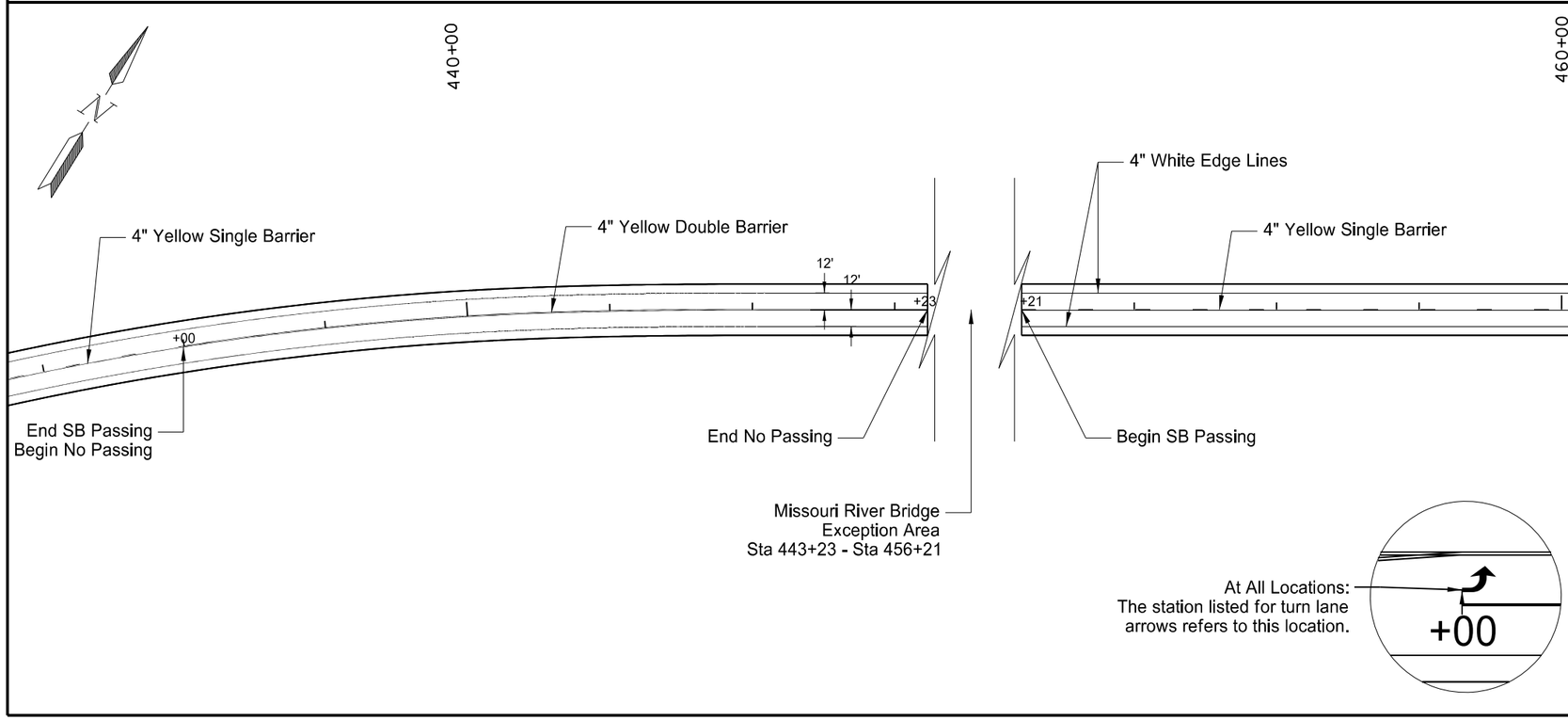

SPEC	CODE	BID ITEM	QUANTITY	UNIT
762	0113	EPOXY PVMT MK 4IN LINE		
		Yellow Single Barrier 422+52 - 427+00	560	LF
		Yellow Double Barrier 427+00 - 433+56	1312	LF
		Yellow Single Barrier 433+56 - 438+00	555	LF
		Yellow Double Barrier 438+00 - 443+23	1046	LF

This document was originally issued and sealed by William Doerr, Registration Number PE- 7113, on 12/04/15 and the original document is stored at the North Dakota Department of Transportation

Pavement Marking

ND 58

Jct 200 to Jct 1804

STATE	PROJECT NO.	SECTION NO.	SHEET NO.
ND	SOIB-7-058(013)000	120	13

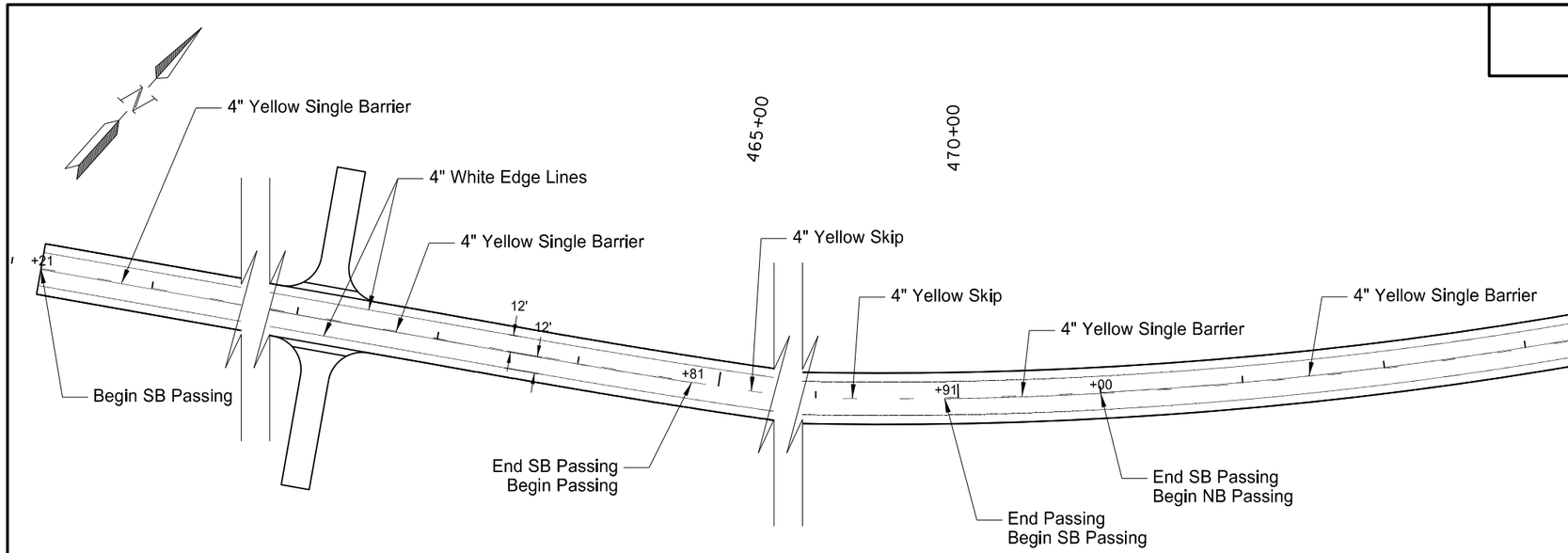

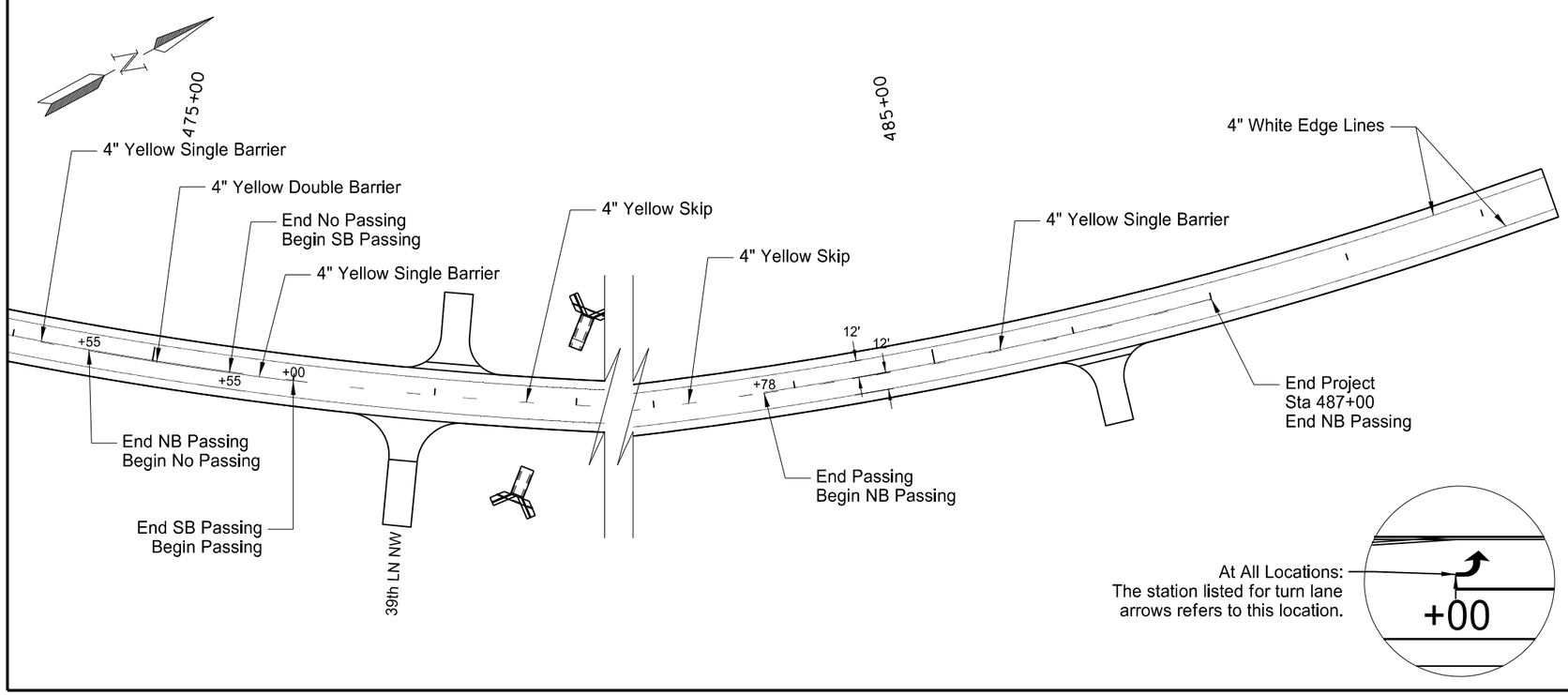

SPEC	CODE	BID ITEM	QUANTITY	UNIT
762	0113	EPOXY PVMT MK 4IN LINE		
		Yellow Single Barrier 456+21 - 464+81	1075	LF
		Yellow Skip 464+81 - 469+91	128	LF
		Yellow Single Barrier 469+91 - 471+00	136	LF
		Yellow Single Barrier 471+00 - 474+55	444	LF
		Yellow Double Barrier 474+55 - 475+55	200	LF
		Yellow Single Barrier 475+55 - 476+00	56	LF
		Yellow Skip 476+00 - 483+78	195	LF
		Yellow Single Barrier 483+78 - 487+00	403	LF
		White Edge Lines 330+00 - 443+23 = 22646 LF 456+21 - 487+00 = 6158 LF	28804	LF

This document was originally issued and sealed by William Doerr, Registration Number PE- 7113, on 12/04/15 and the original document is stored at the North Dakota Department of Transportation

Pavement Marking

ND 58

Jct 200 to Jct 1804

23 USC §409 Documents NDDOT Reserves All Objections.

STATE	PROJECT NO.	SECTION NO.	SHEET NO.
ND	SOIB-7-058(013)000	130	1

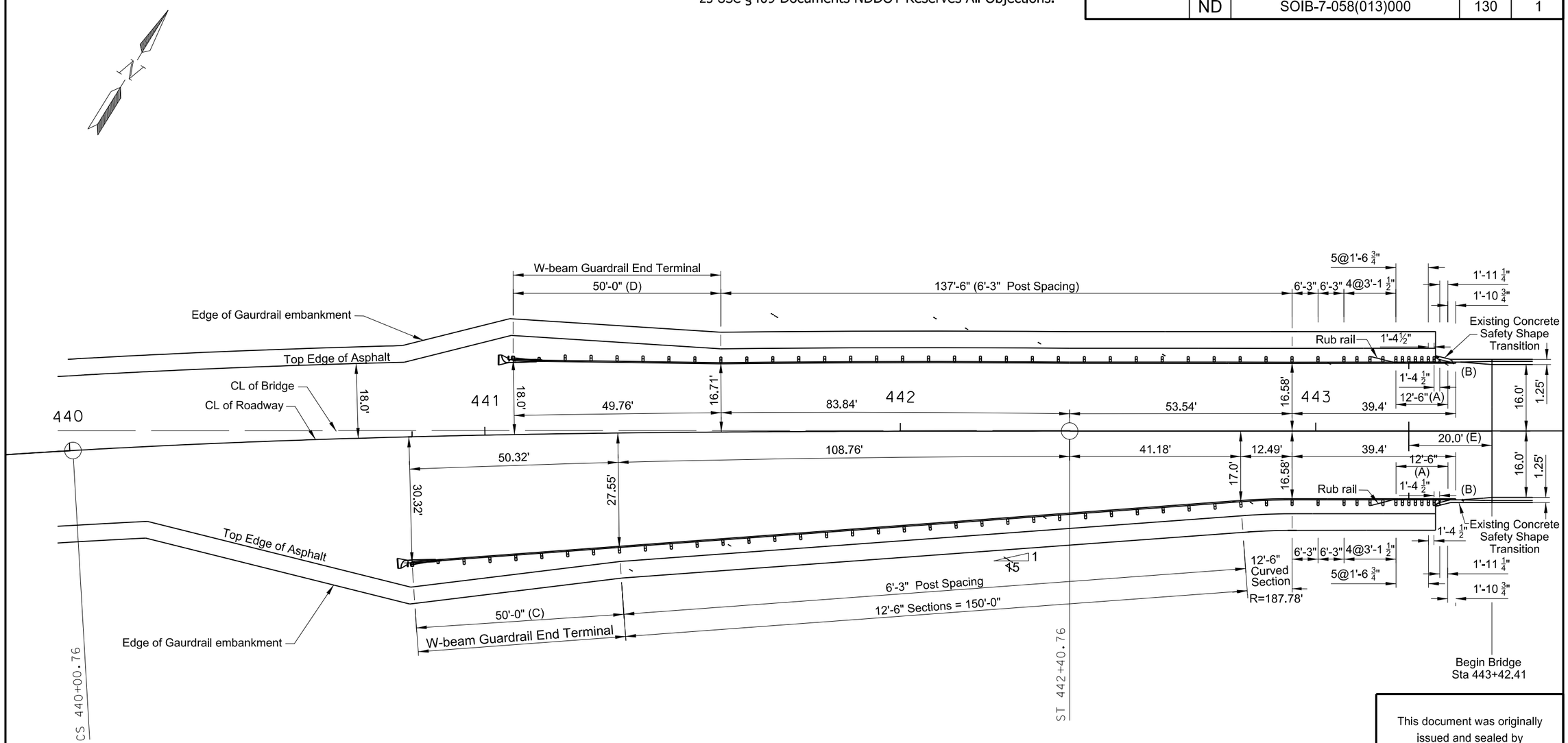

(A) 12'-6" double rail section

(B) Installation of the guardrail onto the existing safety shape transition requires drilling new bolt holes through the concrete. See Standard Drawing D-764-11.

(C) Install either a FLEAT or Slotted Rail Terminal at this location.

If the FLEAT is installed it shall be installed as shown above.

If the Slotted Rail Terminal is installed the offset shown on Standard Drawing D-764-7 shall be used. The additional guardrail embankment shall be at the contractor's expense.

(D) Install a FLEAT end terminal at this location.

(E) Approach Slab.

Note: All offset dimensions are to face of block.

This document was originally issued and sealed by William Doerr, Registration Number PE- 7113, on 12/04/15 and the original document is stored at the North Dakota Department of Transportation

W Beam Guardrail Layout at Begining of Bridge

Missouri River Bridge

ND 58

RP 8.514

23 USC §409 Documents NDDOT Reserves All Objections.

STATE	PROJECT NO.	SECTION NO.	SHEET NO.
ND	SOIB-7-058(013)000	130	2

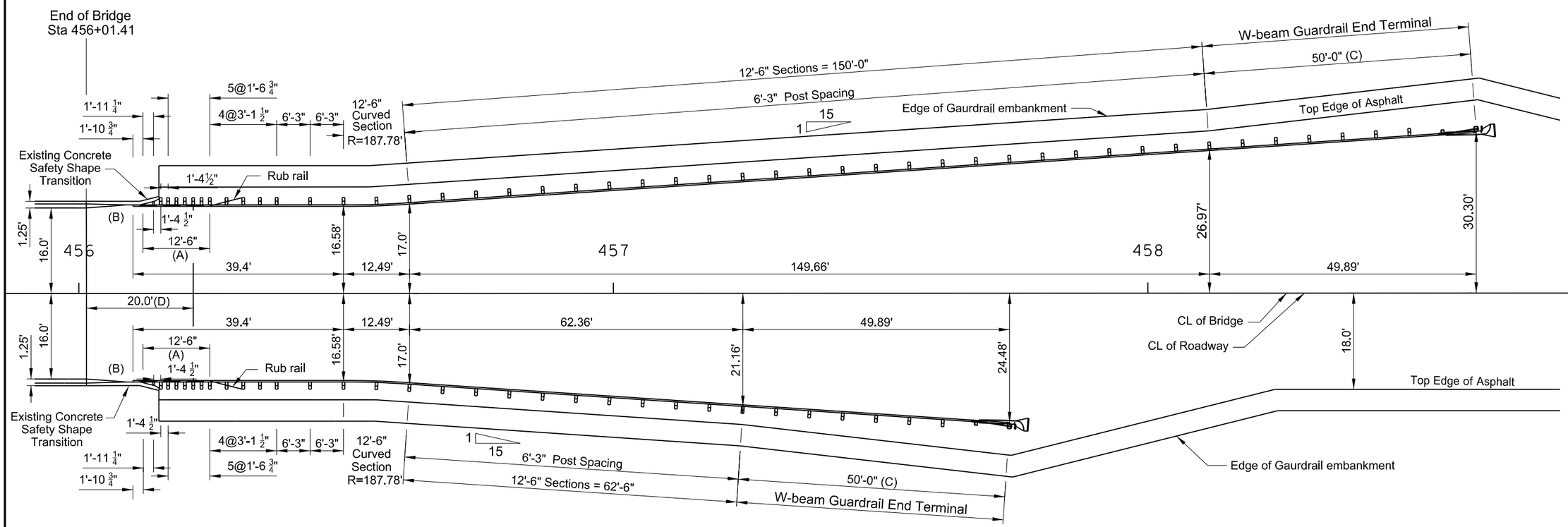

(A) 12'-6" double rail section

(B) Installation of the guardrail onto the existing safety shape transition requires drilling new bolt holes through the concrete. See Standard Drawing D-764-11.

(C) Install either a FLEAT or Slotted Rail Terminal at this location.

If the FLEAT is installed it shall be installed as shown above.

If the Slotted Rail Terminal is installed the offset shown on Standard Drawing D-764-7 shall be used. The additional guardrail embankment shall be at the contractor's expense.

(D) Approach Slab.

Note: All offset dimensions are to face of block.

This document was originally issued and sealed by William Doerr, Registration Number PE- 7113, on 12/04/15 and the original document is stored at the North Dakota Department of Transportation

W Beam Guardrail Layout at End of Bridge

Missouri River Bridge

ND 58

RP 8.514

23 USC § 409 Documents
NDDOT Reserves All Objections

STATE	PROJECT NO.	SECTION NO.	SHEET NO.
ND	SOIB-7-058(013)000	130	3

W-BEAM GUARDRAIL SUMMARY OF QUANTITIES

W-BEAM GUARDRAIL AT BRIDGE ENDS WITH EXISTING SAFETY SHAPE TRANSITION

LOCATION	(A) TERM-INAL CONNEC-TOR	(A) 6" ID STD PIPE 12" LONG	(A) 5/8" Ø x 2" LONG GUARD-RAIL BOLT	(A) 7/8"Ø x 10" LONG HEX HEAD BOLT	(A) 5/8" Ø x 18" LONG GUARD-RAIL BOLT	(A) 6"x 8" x 14" WOOD OFF-SET BLOCK	(A) 6"x 8" x 6' TIMBER POST	(A) 5/8" Ø x 1 1/4" LONG GUARD-RAIL BOLT	(A) 12'-6" DOUBLE RAIL SECTION	(A) 12'-6" STRAIGHT RAIL SECTION	(A) 12'-6" CURVED RAIL SECTION	(A) 1/2" Ø x 4" LONG LAG SCREW	(A) 6" x 8" x 7'-0" TIMBER POSTS	(A) 6" x 8" x 23" WOOD OFFSET BLOCK	(A) 5'-3" RUBRAIL SECTION	(A) 15'-7 1/4" RUBRAIL SECTION	(A) 5/8" Ø x 1 ½" LONG HEX HEAD BOLT	(A) 5/8" Ø x 20" LONG GUARD-RAIL BOLT	(A) REFL-ECTOR-IZED PLATES	(B) EMBANK-MENT -	(A) 7" x 7" x ½" RUBRAIL ANCHOR PLATE	(A) 7 3/4" x 4 1/2" x x 3/8" RUBRAIL SPLICE PLATE	(A) 12" x 12 1/2" x 5/8" PLATE	(A) 6"x 9 3/4" x 14" WOOD OFF-SET BLOCK	(A) 5/8" Ø x 20" LONG GUARD-RAIL BOLT
	EACH	EACH	EACH	EACH	EACH	EACH	EACH	EACH	EACH	EACH	EACH	EACH	EACH	EACH	EACH	EACH	EACH	EACH	EACH	CY	EACH	EACH	EACH	EACH	EACH
Sta 442+44.53 to 443+33.70 Rt.	1	1	1	7	14	7	11	40	1	2	1	1	4	7	1	1	4	7	7	See	1	1	1	1	1
Sta 441+94.30 to 443+33.70 Lt.	1	1	1	7	12	5	9	32	1	2		1	4	7	1	1	4	7	9	Section	1	1	1	1	1
Sta 456+10.12 to 456+86.82 Rt.	1	1	1	7	14	7	11	40	1	2	1	1	4	7	1	1	4	7	7	11	1	1	1	1	1
Sta 456+10.12 to 456+99.30 Lt.	1	1	1	7	14	7	11	40	1	2	1	1	4	7	1	1	4	7	7	Sheets	1	1	1	1	1
TOTAL	4	4	4	28	54	26	42	152	4	8	3	4	16	28	4	4	16	28	30	-	4	4	4	4	4

Remove W-beam guardrail & posts

Sta 441+70.85 to 443+34.91 Rt.	164.4	LF
Sta 442+45.63 to 443+34.91 Lt.	89.4	LF
Sta 456+08.91 to 456+98.19 Rt.	89.4	LF
Sta 456+08.91 to 457+72.97 Lt.	164.4	LF
Total	507.6	LF

W-beam guardrail

Sta 442+44.37 to 443+33.76 Rt.	89.4	LF
Sta 441+94.36 to 443+33.76 Lt.	139.4	LF
Sta 456+10.06 to 456+86.95 Rt.	76.9	LF
Sta 456+10.06 to 456+99.45 Lt.	89.4	LF
Total	395.1	LF

Reset W-beam guardrail

Sta 441+32.00 to 442+44.37 Rt.	112.5	LF
Sta 441+56.92 to 441+94.36 Lt.	37.5	LF
Sta 456+86.95 to 457+24.31 Rt.	37.5	LF
Sta 456+99.45 to 458+11.61 Lt.	112.5	LF
Total	300	LF

Remove end treatment & transtition

Sta 441+34.05 to 441+70.85 Rt.	1	ea
Sta 442+08.83 to 442+45.63 Lt.	1	ea
Sta 456+98.19 to 457+34.99 Rt.	1	ea
Sta 457+72.97 to 458+09.77 Lt.	1	ea
Total	4	ea

Guardrail embankment - type A

Sta 440+17.20 to 443+28.84 Rt.	1	ea
Sta 440+80.70 to 443+28.84 Lt.	1	ea
Sta 456+15.00 to 458+24.32 Rt.	1	ea
Sta 456+15.00 to 459+34.94 Lt.	1	ea
Total	4	ea

W-beam guardrail end terminal

Sta 440+81.68 to 441+32.00 Rt.	1	ea
Sta 441+07.16 to 441+56.92 Lt.	1	ea
Sta 457+24.31 to 457+74.2 Rt.	1	ea
Sta 458+11.61 to 458+61.50 Lt.	1	ea
Total	4	ea

(A) These items are not to be bid separately but shall be included in the price bid for the item "W-Beam Guardrail".

This document was originally issued and sealed by William Doerr, Registration Number PE-7113, on 12/4/15 and the original document is stored at the North Dakota Department of Transportation

W-Beam Guardrail Quantities

Missouri River Bridge

ND 58

RP 8.514

STATE	PROJECT NUMBER	SECTION NO.	SHEET NO.
ND	SOIB-7-058(013)000	170	1

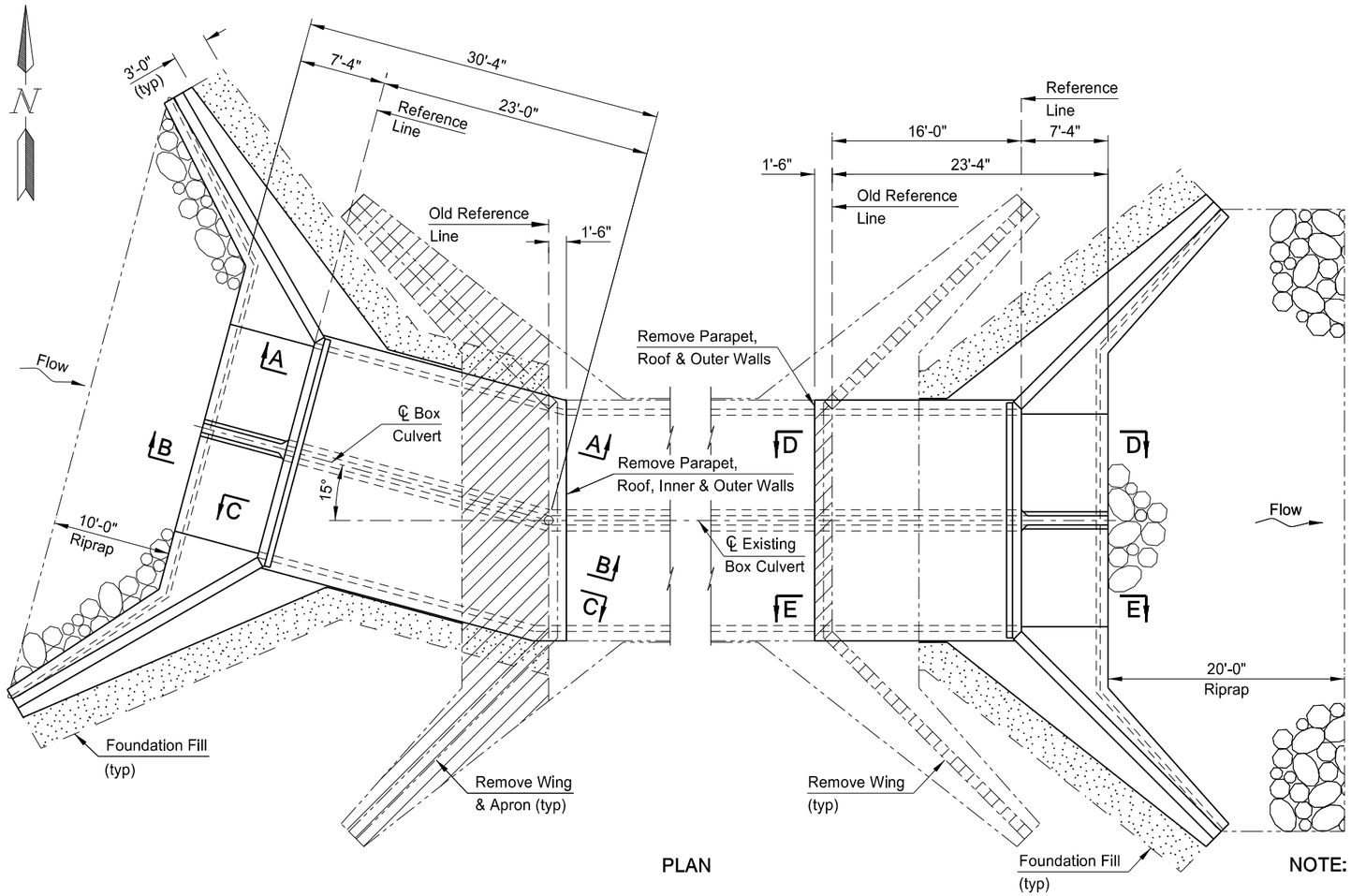

PLAN

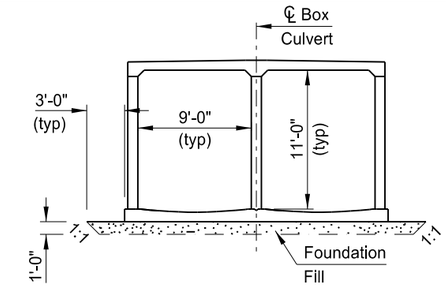

(SHOWING FILL UNDER BOX)

SECTION

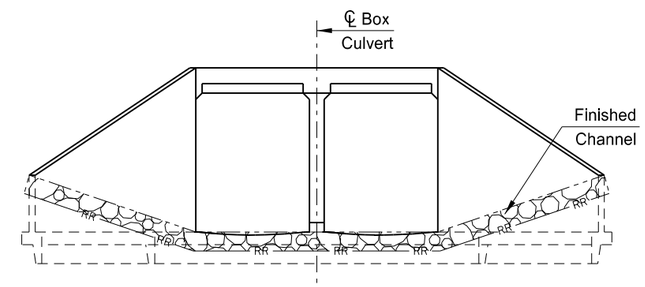

(SHOWING FINISHED SECTION)

END VIEW

This document was originally issued and sealed by Dustin Wing Registration Number PE 7128, on 11/10/2015 and the original document is stored at the North Dakota Department of Transportation

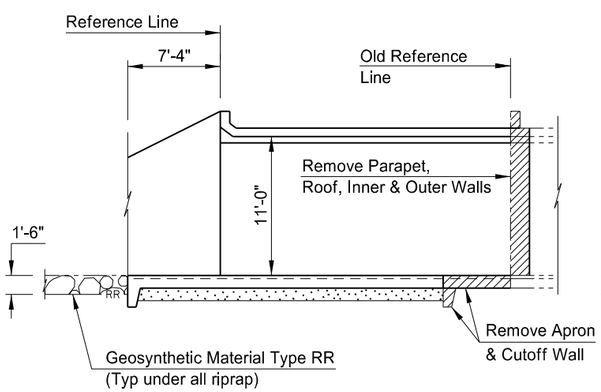

A-A

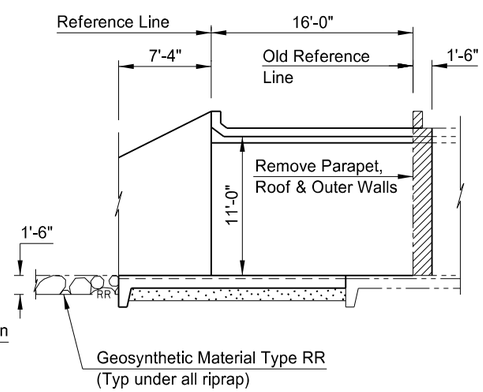

E-E

NOTE:

Provide a 1'-0" minimum depth of foundation fill under the floor. Remove and replace all unsound material under the box with foundation fill. The Engineer will determine the depth required.

DESIGN STRENGTHS:

f'c = 3,000 psi ~ Class AE-3 Concrete
fy = 60,000 psi ~ Reinforcing Steel

BOX CULVERT BID ITEMS

SPEC	CODE	ITEM DESCRIPTION	UNIT	QUANTITY
202	0115	REMOVAL OF CONCRETE - SITE 1	L SUM	1
210	0051	BOX CULVERT EXCAVATION - SITE 1	EA	1
210	0202	FOUNDATION PREPARATION - SITE 1	L SUM	1
210	0210	FOUNDATION FILL	CY	90
256	0200	RIPRAP GRADE II	CY	75
602	1131	CLASS AE-3 CONCRETE-BOX CULVERT	CY	144.6
612	0114	REINFORCING STEEL-GRADE 60-BOX CULVERT	LBS	20,117
709	0155	GEOSYNTHETIC MATERIAL TYPE RR	SY	150

SPECIAL PROVISIONS	
SP 4(14)	MIGRATORY BIRD TREATY ACT

HL-93 DESIGN LOADING

NORTH DAKOTA
DEPARTMENT OF TRANSPORTATION
CREEK
3 MILES NORTH OF ND 200

REINFORCED CONCRETE DOUBLE BOX CULVERT EXTENSION LAYOUT

CLEAR SPAN 2 x 9' CLEAR HEIGHT 11'
MAXIMUM FILL 8'

PROJECT: SOIB-7-058(013)000

MCKENZIE COUNTY

11/10/2015 — DATE
Jon Ketterling — BRIDGE ENGINEER

NOTES

100 SCOPE OF WORK: Work at this site consists of extending a double 9' x 11' reinforced concrete box culvert 23'-0" on the west end and 16'-0" on the east end. The west extension is skewed 15 degrees from the existing box culvert.

202 REMOVAL OF CONCRETE: Remove portions of existing culvert end where extension is to be attached. Remove 1'-6" of existing concrete to expose the existing reinforcing steel at the parapet, roof, and the outside walls at the vertical junction with the wing on the west and east end. Remove existing wing walls in entirety.

On the west end also remove the inner wall from the apron to 1'-6" past the old reference line, and the floor apron and cutoff walls in entirety. When removing the west floor apron leave 1'-6" of rebar length protruding from the old reference line.

On the east end cut rebar protruding from the floor under the wing walls flush with the top surface of the floor. Flame cutting of reinforcing steel is permitted. Leave existing floor and cutoff walls in place.

If the existing wall and roof thicknesses are different than the new thicknesses, taper the exterior surfaces in the first 1'-6" of the barrel while keeping the interior surfaces flush.

Submit SFN 17987 "Asbestos Notification of Demolition and Renovation" to the North Dakota Department of Health 10 days before beginning removal of concrete.

602 CURING CONCRETE: Wet cure all concrete surfaces not covered by forms. Cover the concrete with a double thickness of burlap. Maintain surface moisture between the final finish and placement of burlap by periodic applications of a light fog spray of water. Keep the burlap continuously moist until the end of the curing period.

602 CONCRETE: Provide aggregate for concrete that meets the requirements of Section 802.01 C.2, "Coarse Aggregate" and Section 802.01 C.3, "Fine Aggregate."

602 CONCRETE: Cast the following elements of each section in one continuous run:

1. Floor slab and wing footings
2. Each intermediate wall up to the bottom of fillets
3. Each sidewall up to the bottom of fillets with its adjacent wings complete to the top
4. Roof slab and parapets

Allow the concrete in the walls to set at least two hours before the roof slab is poured.

612 REINFORCING STEEL: Dimensions of bent bars are given out to out.

This document was originally issued and sealed by Dustin Wing, Registration Number PE-7128, on 11/10/2015 and the original document is stored at the North Dakota Department of Transportation.

STATE	PROJECT NUMBER	SECTION NO.	SHEET NO.
ND	SOIB-7-058(013)000	170	3

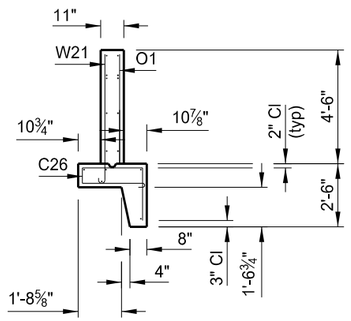

END VIEW

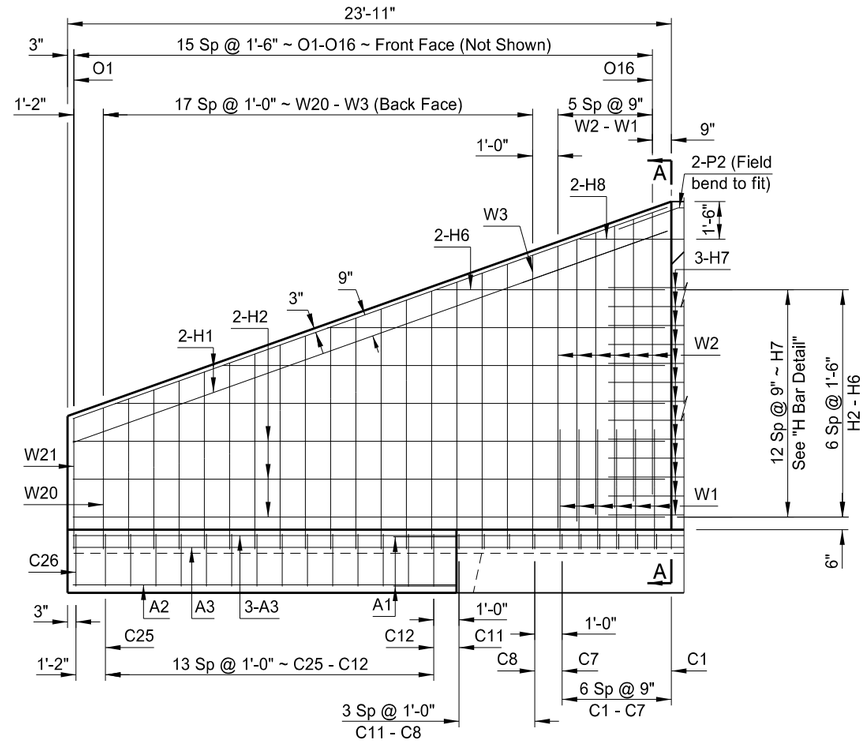

WING ELEVATION

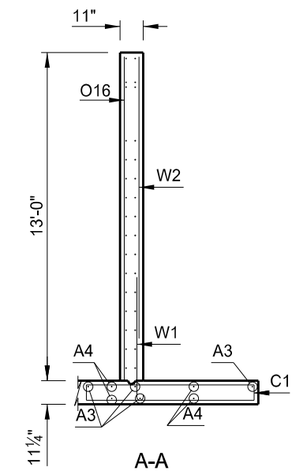

A-A

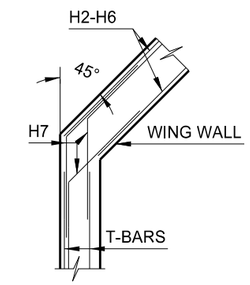

H BAR DETAIL

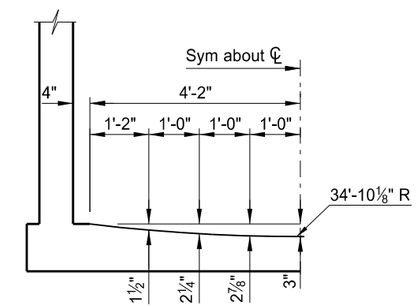

CURVED FLOOR OFF-SETS

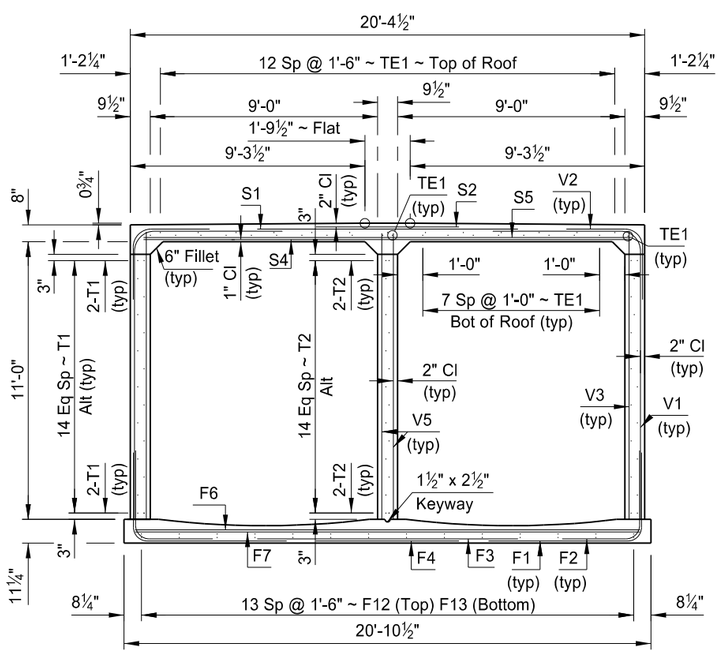

EAST END BARREL SECTION

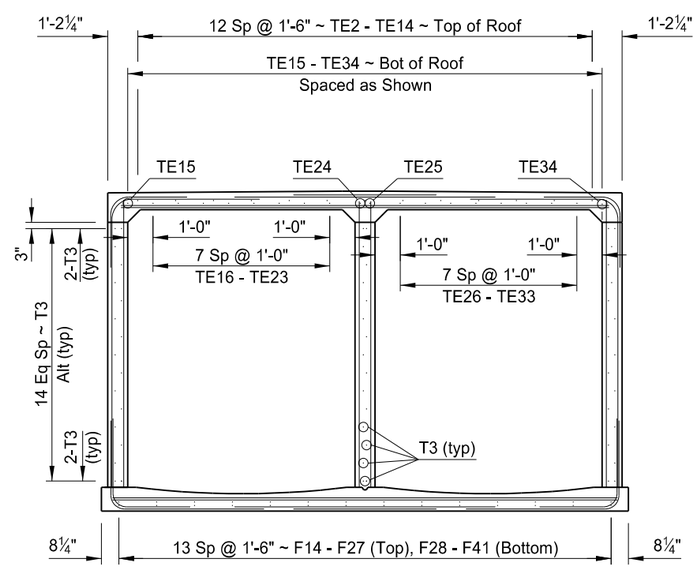

(SAME AS EAST BARREL EXCEPT AS INDICATED)

WEST END BARREL SECTION

This document was originally issued and sealed by Dustin Wing Registration Number PE 7128, on 11/10/2015 and the original document is stored at the North Dakota Department of Transportation

CREEK
3 MILE NORTH OF ND 200

BARREL SECTION & WING DETAILS

STATE	PROJECT NUMBER	SECTION NO.	SHEET NO.
ND	SOIB-7-058(013)000	170	4

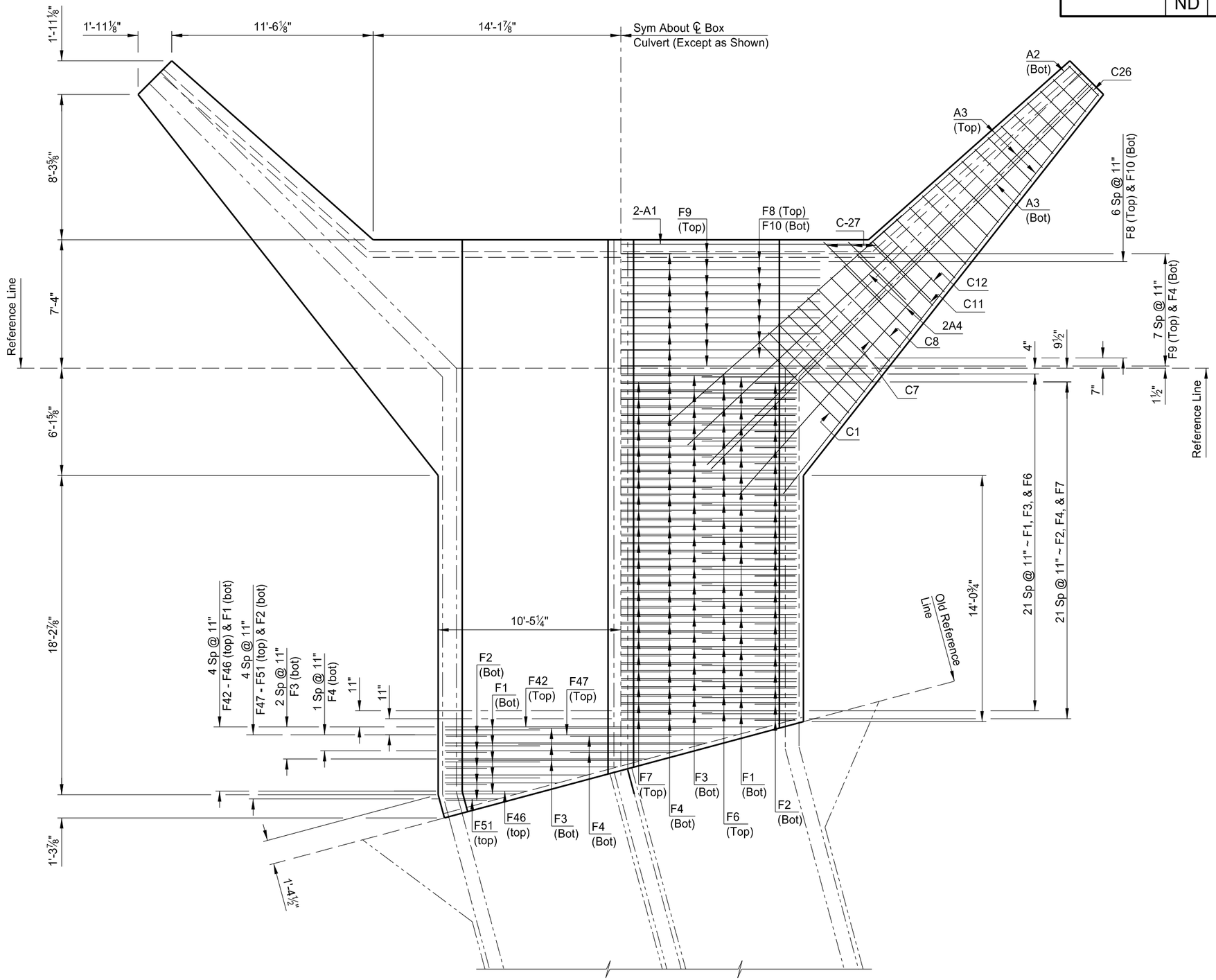

This document was originally issued and sealed by Dustin Wing Registration Number PE 7128, on 11/10/2015 and the original document is stored at the North Dakota Department of Transportation

CREEK
3 MILE NORTH OF ND 200

WEST FLOOR DETAIL

STATE	PROJECT NUMBER	SECTION NO.	SHEET NO.
ND	SOIB-7-058(013)000	170	5

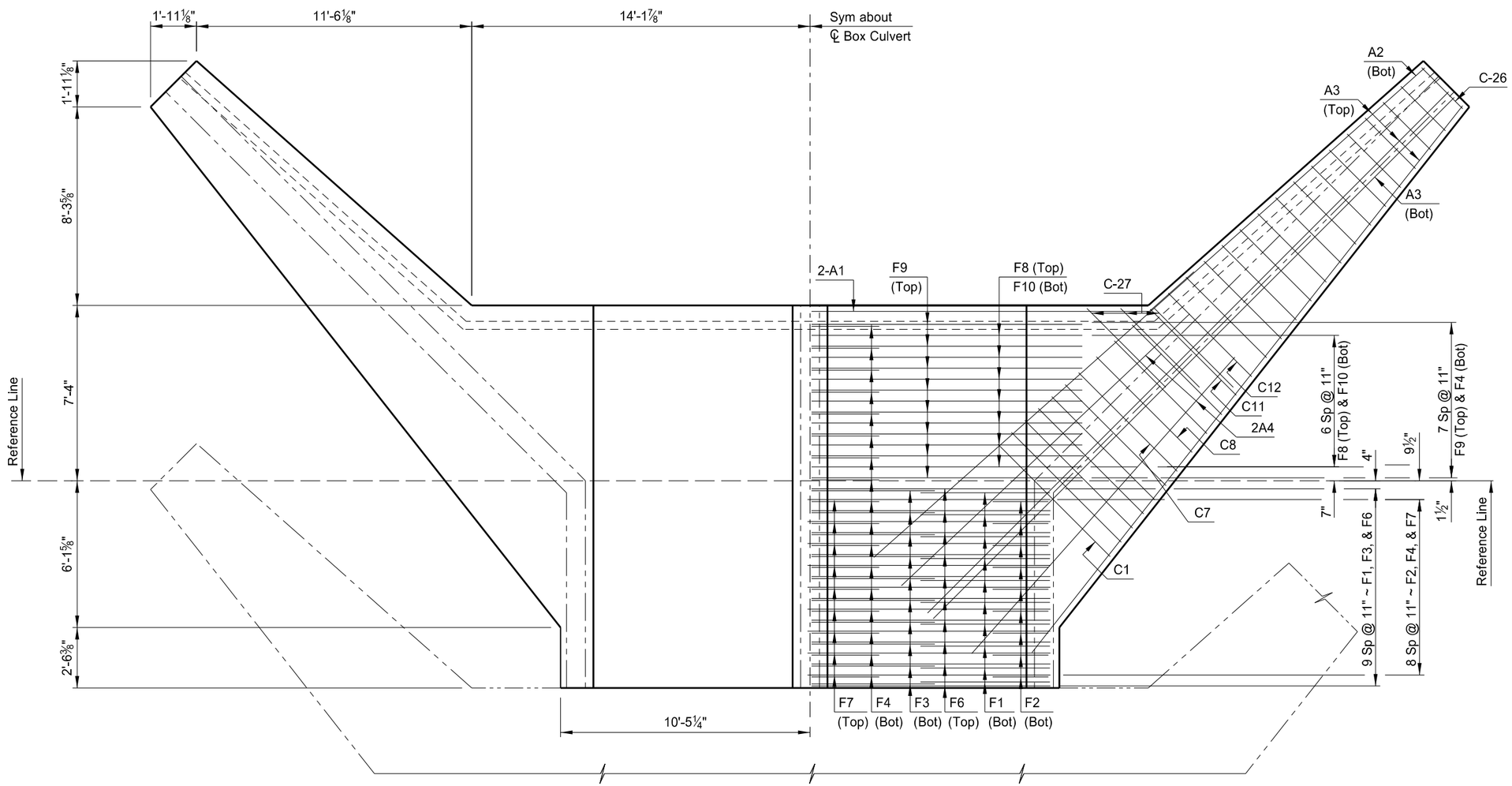

(SHOWING DIMENSIONS) (SHOWING REINFORCING)

FLOOR PLAN

This document was originally issued and sealed by Dustin Wing Registration Number PE 7128, on 11/10/2015 and the original document is stored at the North Dakota Department of Transportation

FOUR MILE CREEK
3 MILE NORTH OF ND 200

EAST FLOOR DETAIL

STATE	PROJECT NUMBER	SECTION NO.	SHEET NO.
ND	SOIB-7-058(013)000	170	6

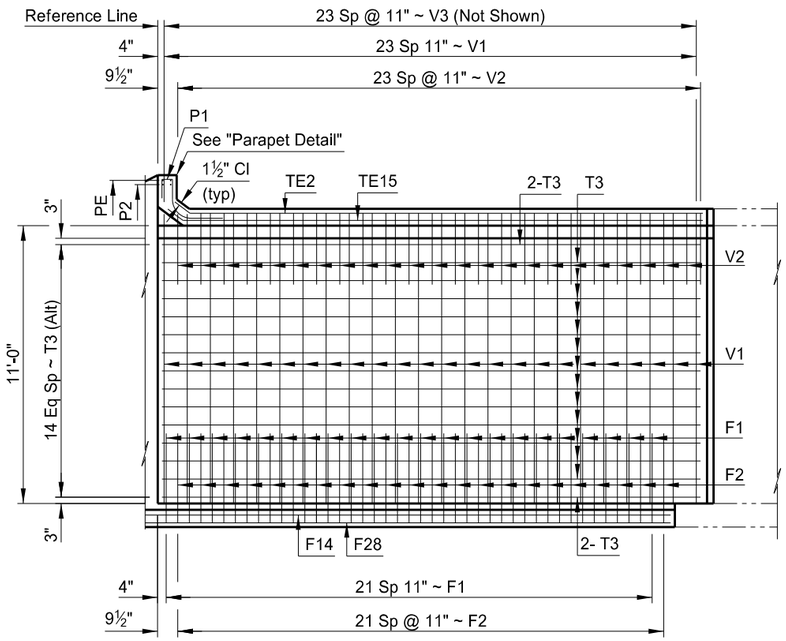

(OUTER WALL)
A-A

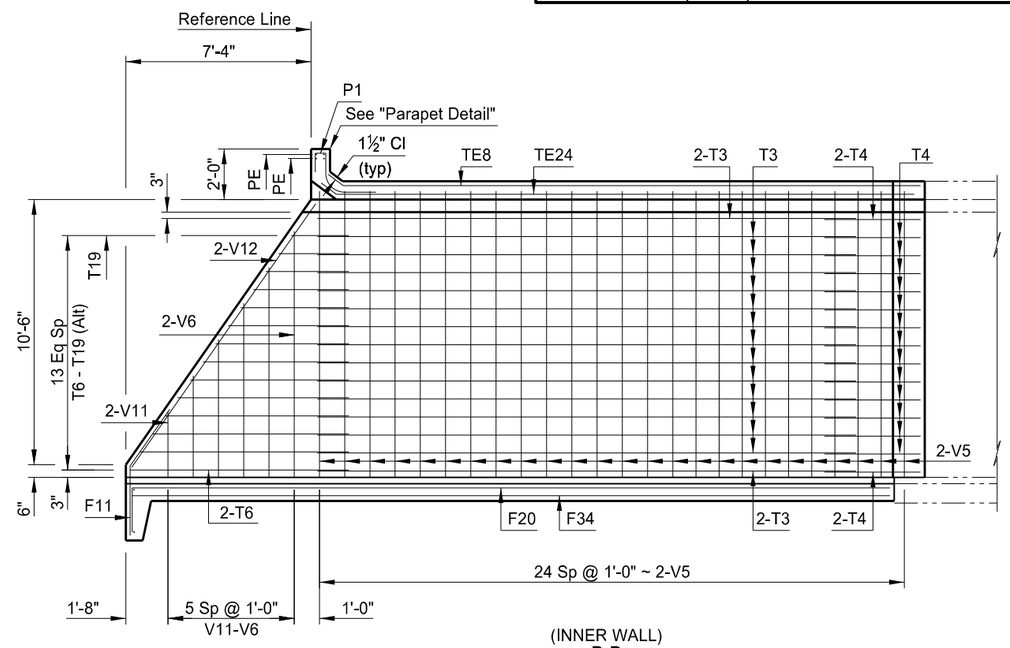

(INNER WALL)
B-B

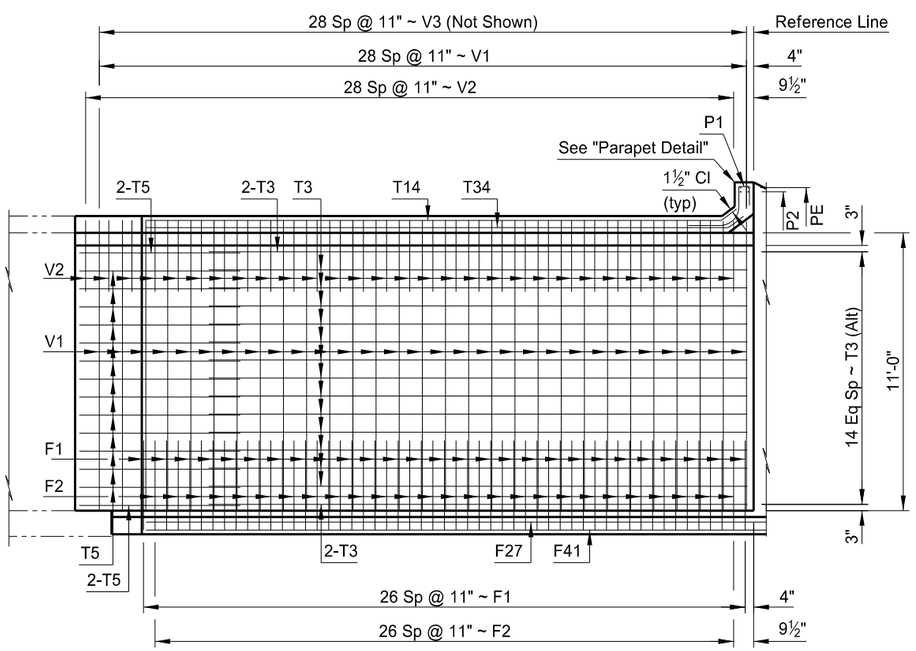

(OUTER WALL)
C-C

LONGITUDINAL SECTIONS

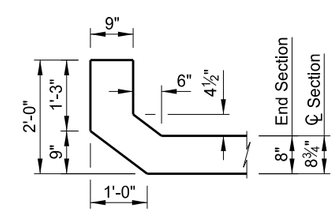

PARAPET DETAIL

This document was originally issued and sealed by Dustin Wing Registration Number PE 7128, on 11/10/2015 and the original document is stored at the North Dakota Department of Transportation

CREEK
3 MILE NORTH OF ND 200

WEST WALL DETAILS
PARAPET DETAIL

STATE	PROJECT NUMBER	SECTION NO.	SHEET NO.
ND	SOIB-7-058(013)000	170	7

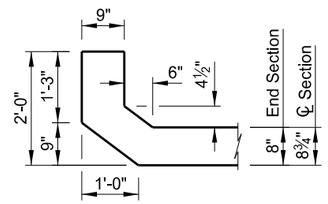

PARAPET DETAIL

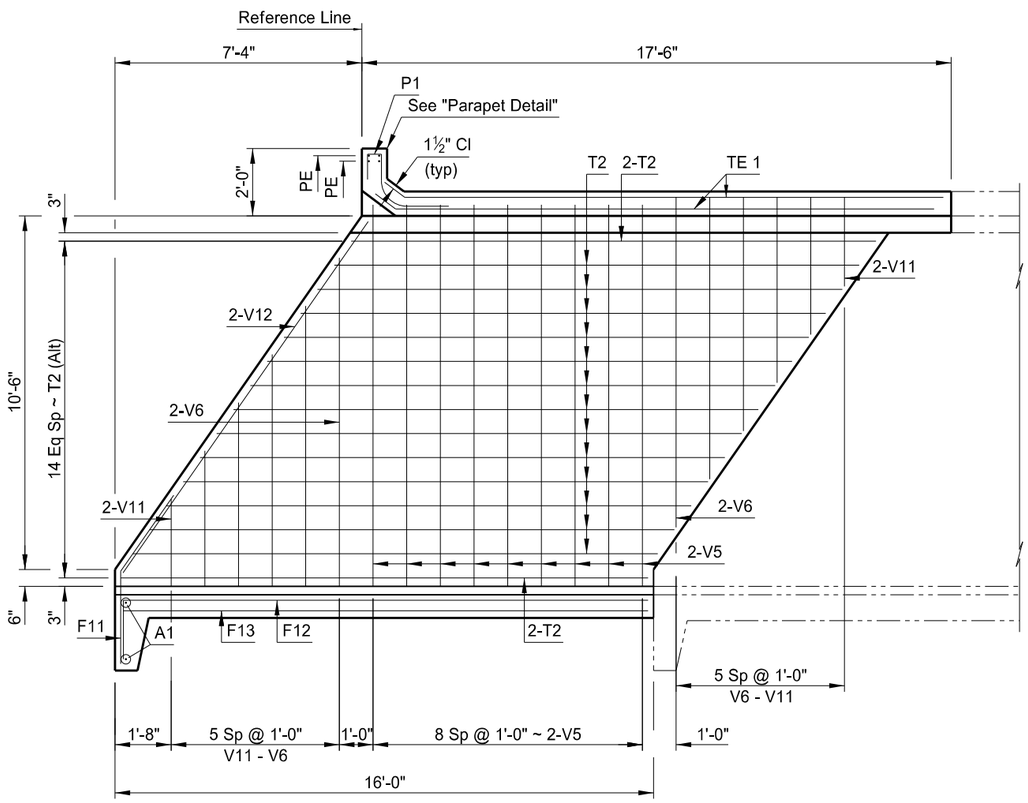

D-D

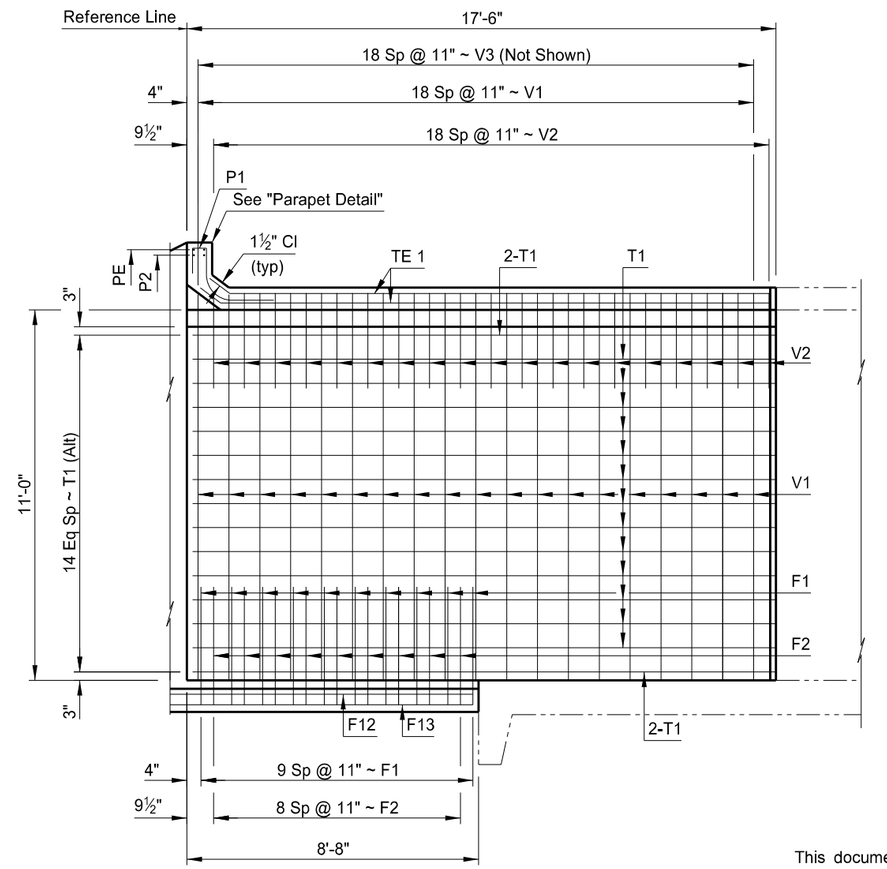

E-E

This document was originally issued and sealed by Dustin Wing Registration Number PE 7128, on 11/10/2015 and the original document is stored at the North Dakota Department of Transportation

LONGITUDINAL SECTIONS

CREEK
3 MILE NORTH OF ND 200

EAST WALL DETAILS &
PARAPET DETAIL

STATE	PROJECT NUMBER	SECTION NO.	SHEET NO.
ND	SOIB-7-058(013)000	170	8

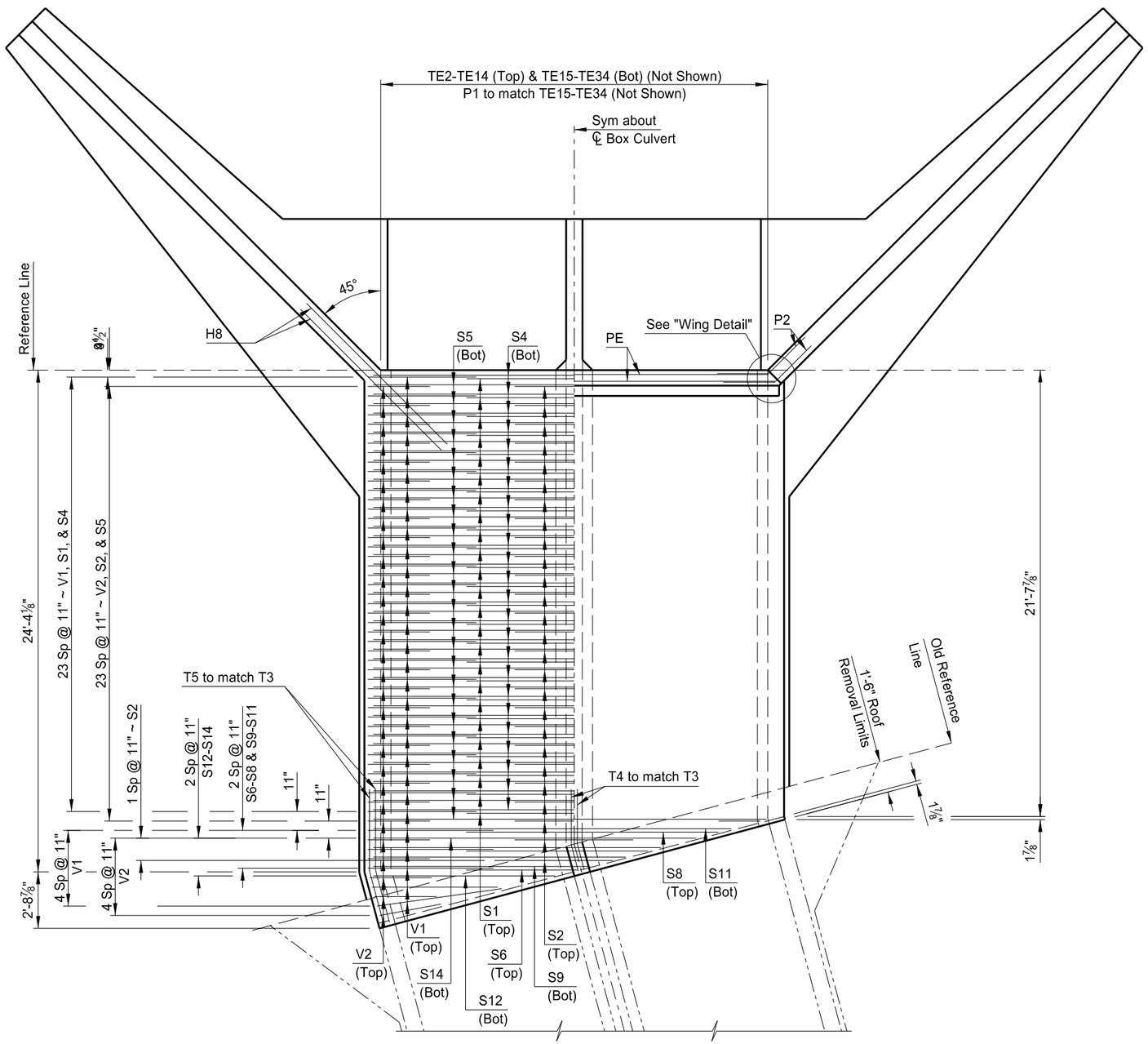

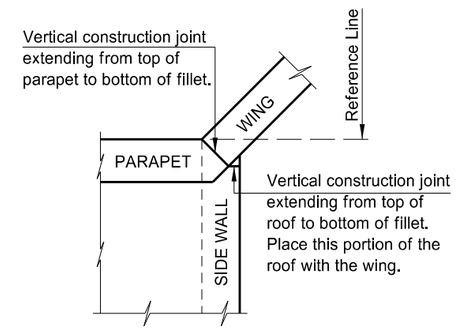

WING DETAIL

This document was originally issued and sealed by Dustin Wing Registration Number PE 7128, on 11/10/2015 and the original document is stored at the North Dakota Department of Transportation

CREEK
3 MILE NORTH OF ND 200

WEST ROOF DETAILS

STATE	PROJECT NUMBER	SECTION NO.	SHEET NO.
ND	SOIB-7-058(013)000	170	9

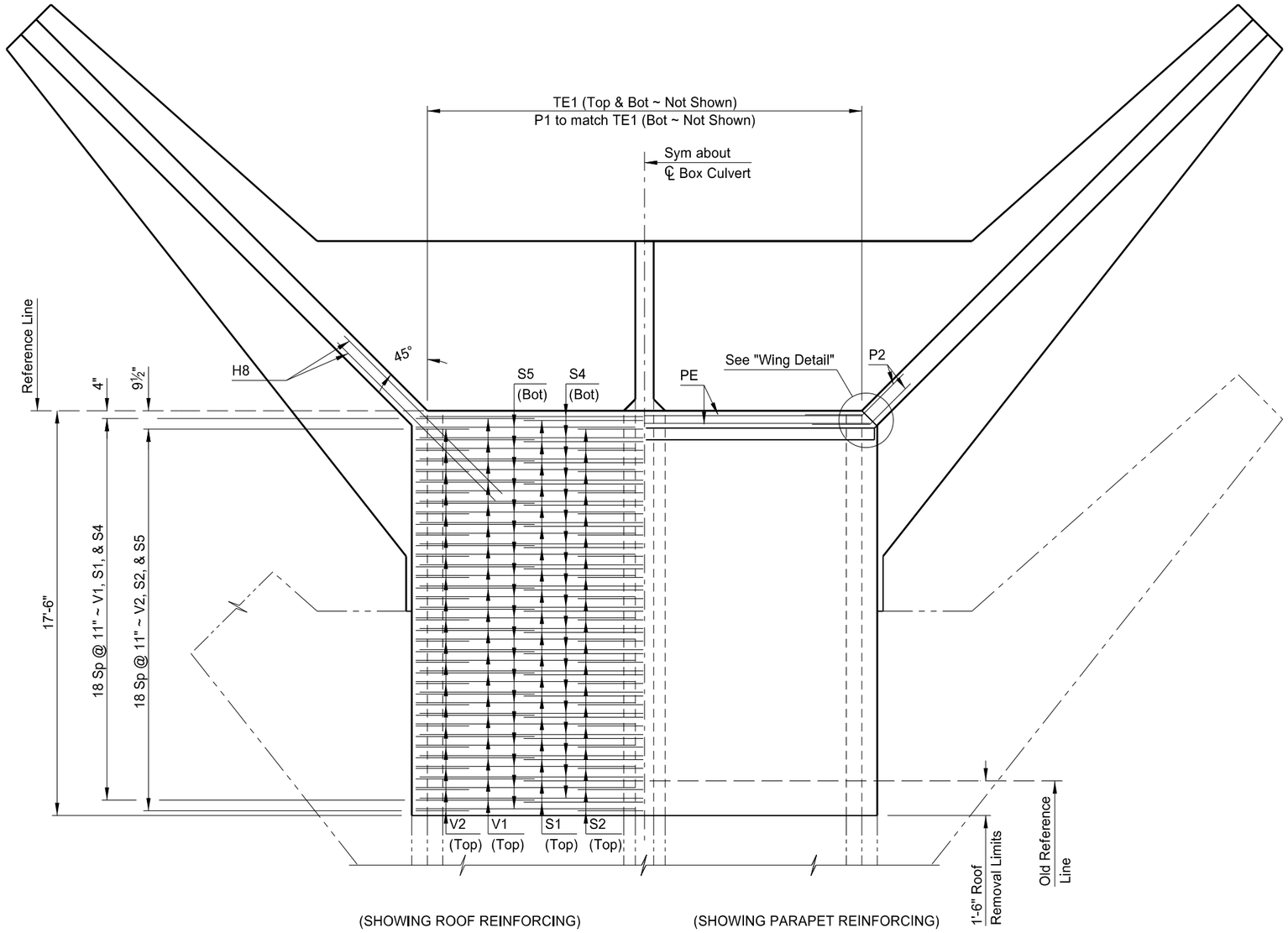

ROOF PLAN

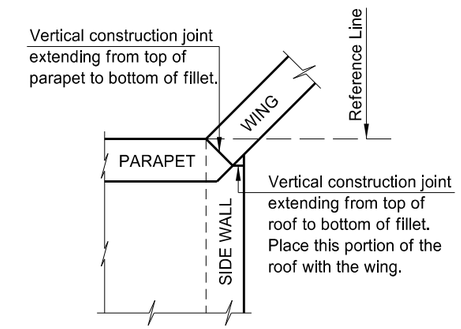

WING DETAIL

This document was originally issued and sealed by Dustin Wing Registration Number PE 7128, on 11/10/2015 and the original document is stored at the North Dakota Department of Transportation

CREEK
3 MILE NORTH OF ND 200

EAST ROOF DETAILS

STATE	PROJECT NUMBER	SECTION NO.	SHEET NO.
ND	SOIB-7-058(013)000	170	10

BAR LIST (CONSTANT)

MARK	SIZE	NO.	LENGTH	SHAPE
W1	7	24	4'-10"	BENT
W2	6	24	11'-2"	STR.
W3	7	4	12'-5"	BENT
W4	7	4	12'-1"	BENT
W5	7	4	11'-8"	BENT
W6	7	4	11'-4"	BENT
W7	7	4	11'-0"	BENT
W8	7	4	10'-7"	BENT
W9	6	4	10'-1"	BENT
W10	6	4	9'-9"	BENT
W11	6	4	9'-5"	BENT
W12	5	4	8'-11"	BENT
W13	5	4	8'-7"	BENT
W14	4	4	8'-2"	BENT
W15	4	4	7'-10"	BENT
W16	4	4	7'-5"	BENT
W17	4	4	7'-1"	BENT
W18	4	4	6'-9"	BENT
W19	4	4	6'-5"	BENT
W20	4	4	6'-0"	BENT
W21	4	4	5'-7"	BENT
C1	6	4	14'-10"	BENT
C2	6	4	14'-8"	BENT
C3	6	4	14'-4"	BENT
C4	6	4	14'-0"	BENT
C5	6	4	13'-10"	BENT
C6	6	4	13'-6"	BENT
C7	6	4	13'-4"	BENT
C8	5	4	12'-10"	BENT
C9	5	4	12'-6"	BENT
C10	5	4	12'-2"	BENT
C11	5	4	11'-10"	BENT
C12	5	4	13'-0"	BENT
C13	5	4	12'-8"	BENT
C14	5	4	12'-4"	BENT
C15	5	4	12'-0"	BENT
C16	5	4	11'-8"	BENT
C17	4	4	11'-3"	BENT
C18	4	4	10'-11"	BENT
C19	4	4	10'-5"	BENT
C20	4	4	10'-1"	BENT
C21	4	4	9'-9"	BENT
C22	4	4	9'-5"	BENT
C23	4	4	9'-1"	BENT
C24	4	4	8'-9"	BENT
C25	4	4	8'-5"	BENT
C26	4	4	7'-11"	BENT
C27	4	12	6'-9"	BENT
H1	7	16	24'-11"	STR.
H2	4	24	23'-6"	STR.
H3	4	8	21'-9"	STR.
H4	4	8	17'-6"	STR.
H5	4	8	13'-3"	STR.
H6	4	8	9'-1"	STR.
H7	4	156	6'-0"	BENT
H8	6	8	9'-8"	STR.

BAR LIST (CONSTANT)

MARK	SIZE	NO.	LENGTH	SHAPE
01-016	4	4 SETS	133'-4"	STR.
A1	6	8	17'-8"	BENT
A2	6	4	15'-4"	STR.
A3	6	16	30'-7"	STR.
A4	6	16	16'-7"	STR.
P1	4	40	4'-7"	BENT
P2	6	8	5'-0"	BENT
PE	6	8	12'-8"	STR.
V6	4	6	9'-9"	STR.
V7	4	6	8'-3"	STR.
V8	4	6	6'-10"	STR.
V9	4	6	5'-5"	STR.
V10	4	6	4'-0"	STR.
V11	4	6	2'-7"	STR.
V12	6	4	12'-10"	STR.
F8	5	14	22'-9"	STR.
F9	4	16	22'-9"	STR.
F10	4	14	22'-9"	STR.
F11	6	4	5'-6"	BENT
F12	4	14	17'-4"	BENT
F13	4	14	15'-7"	STR.
F14-F27	4	1 SET	442'-9"	BENT
F28-F41	4	1 SET	418'-3"	STR.
T6	4	2	8'-8"	STR.
T7-T19	4	1 SET	69'-4"	STR.

BAR LIST (VARIABLE)

MARK	SIZE	NO.	LENGTH	SHAPE
V1	4	91	17'-3"	BENT
V2	5	91	5'-6"	BENT
V3	4	91	11'-4"	STR.
V5	4	68	11'-4"	STR.
F1	5	69	9'-3"	BENT
F2	5	67	6'-3"	BENT
F3	4	35	10'-6"	STR.
F4	6	49	5'-9"	STR.
F6	5	32	20'-4"	STR.
F7	4	31	20'-4"	STR.
F42-F46	5	1 SET	59'-10"	STR.
F47-F51	4	1 SET	51'-3"	STR.
S1	5	43	10'-6"	STR.
S2	6	45	5'-9"	STR.
S4	5	43	19'-6"	STR.
S5	5	43	19'-6"	STR.
S6-S8	5	1 SET	26'-5"	STR.
S9-S11	5	1 SET	41'-9"	STR.
S12-S14	5	1 SET	36'-8"	STR.
T1	4	34	17'-0"	STR.
T2	4	17	15'-6"	STR.
T3	4	51	21'-4"	STR.
T4	4	17	3'-11"	BENT
T5	4	17	6'-6"	BENT
TE1	4	33	17'-1"	BENT
TE2-TE14	4	1 SET	305'-6"	BENT
TE15-TE34	4	1 SET	485'-10"	BENT

This document was originally issued and sealed by Dustin Wing Registration Number PE 7128, on 11/10/2015 and the original document is stored at the North Dakota Department of Transportation

CONCRETE QUANTITIES (EAST END)	
ENTIRE FLOOR	21.1 CY
TWO OUTSIDE WALLS & TWO WINGS	24.8 CY
INSIDE WALL	4.9 CY
ENTIRE ROOF	10.9 CY
TOTAL	61.7 CY

CONCRETE QUANTITIES (WEST END)	
ENTIRE FLOOR	30.0 CY
TWO OUTSIDE WALLS & TWO WINGS	29.1 CY
INSIDE WALL	8.8 CY
ENTIRE ROOF	15.0 CY
TOTAL	82.9 CY

QUANTITIES	
CLASS AE-3 CONCRETE	144.6 CY
REINFORCING STEEL	20,117 LBS

CREEK
3 MILE NORTH OF ND 200

REINFORCING BAR LIST

STATE	PROJECT NUMBER	SECTION NO.	SHEET NO.
ND	SOIB-7-058(013)000	170	11

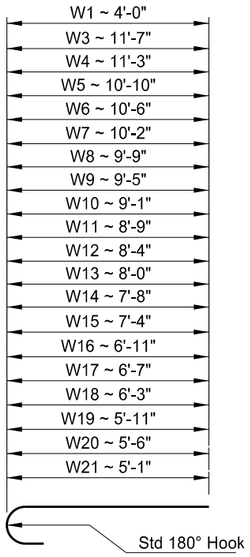

W1 & W3 - W12

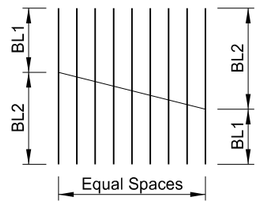

2 SETS SHOWN

MARK	LENGTH 1 SET	BL1	BL2	SPACES
O1-O16	133'-4"	4'-4"	12'-4"	15
F28-F41	418'-3"	27'-3"	32'-6"	13
F42-F46	59'-10"	5'-1"	18'-10"	4
F47-F51	51'-3"	3'-5"	17'-1"	4
S6-S8	26'-5"	5'-4"	12'-3"	2
S9-S11	41'-9"	10'-6"	17'-4"	2
S12-S14	36'-8"	8'-9"	15'-8"	2
T7-T19	69'-4"	2'-4"	8'-4"	12

BAR CUTTING DETAILS

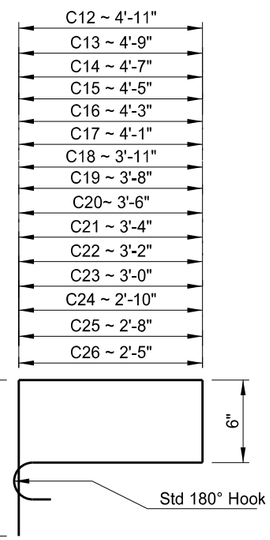

C12 - C26

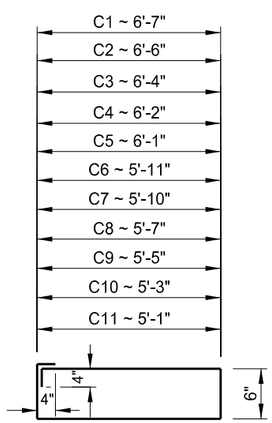

C1 - C11

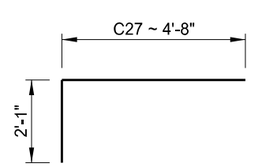

C27

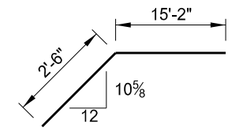

A1

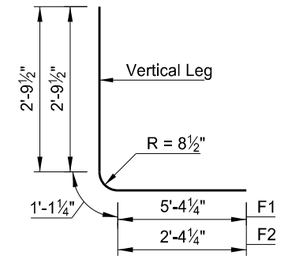

F1 & F2

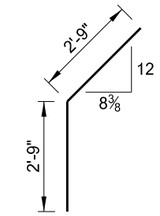

F11

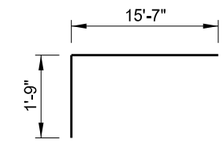

F12

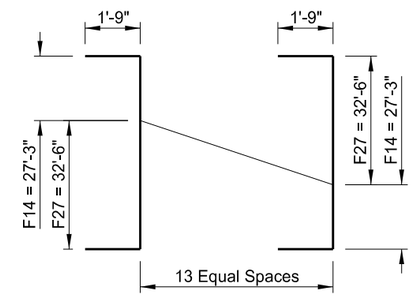

F14 - F27

2 SETS SHOWN
1 SETS REQUIRED
LENGTH 1 SET = 442'-9"

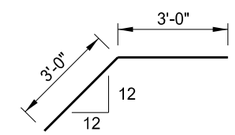

H7

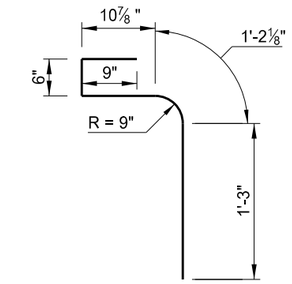

P1

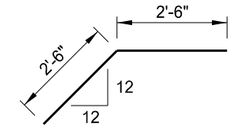

P2

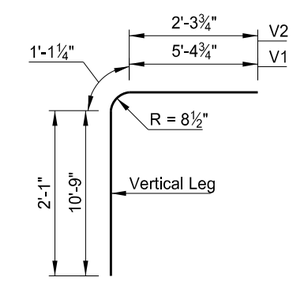

V1 & V2

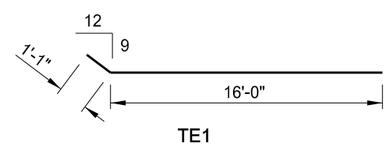

TE1

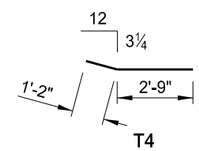

T4

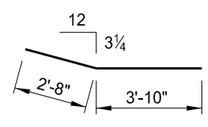

T5

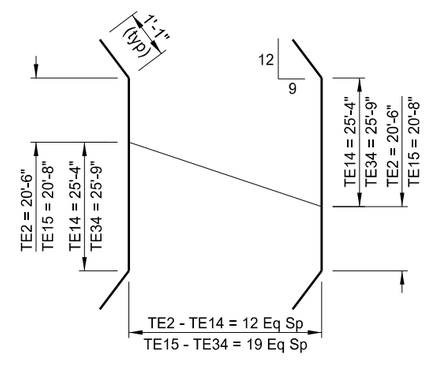

TE2-TE14
TE15-TE34

2 SETS SHOWN
1 SETS REQUIRED
LENGTH 1 SET TE2-TE14 = 305'-6"
LENGTH 1 SET TE15-TE34 = 485'-10"

This document was originally issued and sealed by Dustin Wing Registration Number PE 7128, on 11/10/2015 and the original document is stored at the North Dakota Department of Transportation

CREEK
3 MILE NORTH OF ND 200

BAR DETAILS

STATE	PROJECT NUMBER	SECTION NO.	SHEET NO.
ND	SOIB-7-058(013)000	170	12

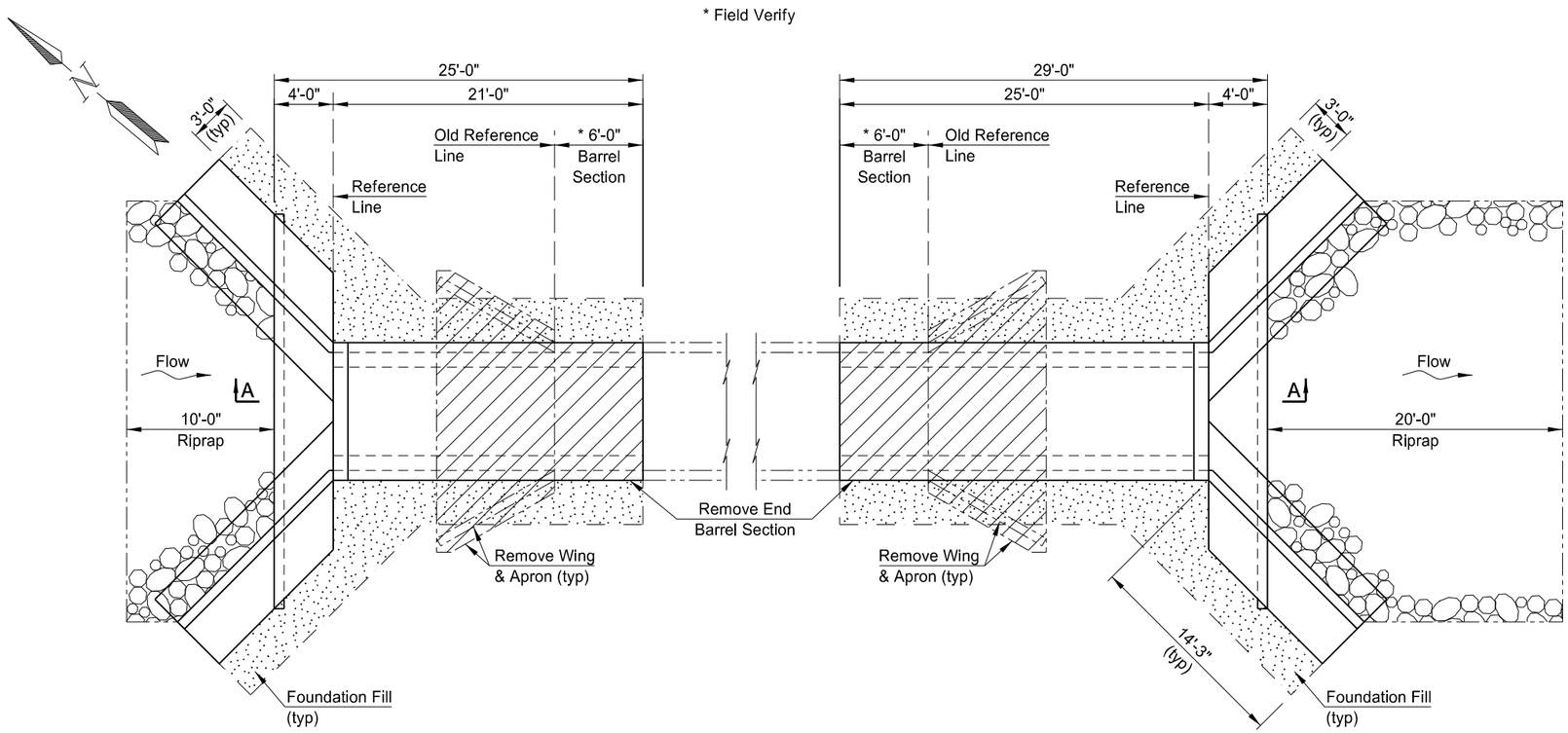

PLAN

For a single barrel box culvert with 8" thick roof, 8" floor and 8" walls, the following total factored moments and shears would result from the application of the required loads:

FACTORED DESIGN MOMENTS (SINGLE)		FACTORED DESIGN SHEARS (SINGLE)	
WALL MOMENT	3,291 ft-lbs	WALL SHEAR	3,232 lbs
ROOF MOMENTS		ROOF SHEARS	
CORNER	9,285 ft-lbs	CORNER	6,905 lbs
BOTTOM	12,558 ft-lbs	FLOOR SHEARS	
FLOOR MOMENTS		CORNER	9,648 lbs
CORNER	10,296 ft-lbs		
TOP	13,368 ft-lbs		

BOX CULVERT BID ITEMS

SPEC	CODE	ITEM DESCRIPTION	UNIT	QUANTITY
202	0116	REMOVAL OF CONCRETE-SITE 2	L SUM	1
210	0052	BOX CULVERT EXCAVATION-SITE 2	EA	1
210	0203	FOUNDATION PREPARATION-SITE 2	L SUM	1
210	0210	FOUNDATION FILL	CY	60
256	0200	RIPRAP GRADE II	CY	45
606	0806	8FT X 6FT PRECAST RCB CULVERT	LF	46
606	4806	8FT X 6FT PRECAST RCB END SECTION	EA	2
709	0155	GEOSYNTHETIC MATERIAL TYPE RR	SY	90

This document was originally issued and sealed by Brian W. Raschke, Registration Number PE 4361, on 11/10/15 and the original document is stored at the North Dakota Department of Transportation

NOTE:

Provide a 1'-0" minimum depth of foundation fill under the floor. Remove and replace all unsound material under the box extension with foundation fill. The Engineer will determine the depth required.

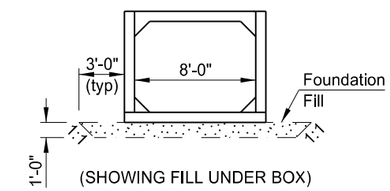

(SHOWING FILL UNDER BOX)

SECTION

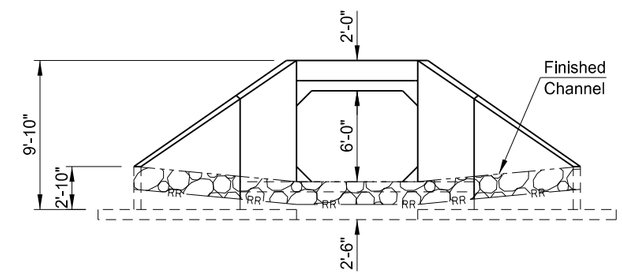

(SHOWING FINISHED SECTION)

END VIEW

NOTE:

See Dwg 58-009.046-3 for Section A-A.

SPECIAL PROVISIONS	
SP 4(14)	MIGRATORY BIRD TREATY ACT

STANDARD DRAWINGS
D-714-22

HL-93 DESIGN LOADING

NORTH DAKOTA
DEPARTMENT OF TRANSPORTATION
IRRIGATION DITCH
1 MILE SOUTH OF ND 1804

PRECAST CONCRETE SINGLE
BOX CULVERT EXTENSION LAYOUT

CLEAR SPAN 1 x 8' CLEAR HEIGHT 6'
MAXIMUM FILL 12'

PROJECT: SOIB-7-058(013)000

McKENZIE COUNTY

11/10/15 — DATE
Jon Ketterling — BRIDGE ENGINEER

NOTES

100 SCOPE OF WORK: Work at this site consists of extending a single 8' x 6' precast concrete box culvert 12'-0" on the northwest end and 22'-0" on the southeast end.

105 WORK DRAWINGS: Submit work drawings for the precast concrete box culvert to the Engineer for review. Use the following minimum text sizes on all work drawing sheets.

Dimensions and Notes =	0.08"
Detail Subtitles =	0.09"
Detail Titles =	0.10"

202 REMOVAL OF CONCRETE: Remove the existing cast-in-place floor apron and cutoff walls in entirety. Remove the existing precast wingwalls and end barrel section in entirety. Remove the existing sheet piling in entirety. Include all costs to remove the floor apron, cutoff walls, wingwalls, end barrel section and sheet piling in the contract unit price for “Removal of Concrete-Site 2.”

Submit SFN 17987 “Asbestos Notification of Demolition and Renovation” to the North Dakota Department of Health 10 days before beginning removal of concrete.

606 PRECAST SECTION: Tie the barrel sections together with 1" ϕ tie bolts as shown on Standard Drawing D-714-22. Place two ties per wall at each joint located at third points of the wall clear height. Field drill holes into the existing barrel section to facilitate tying the section to the new adjacent barrel section.

Payment for “8Ft X 6Ft Precast RCB End Section” includes the apron, cutoff wall, parapet and wingwalls. Attach the apron to the last barrel section, the wingwalls and the cutoff wall. Attach the wingwalls to the last barrel section. Provide a welded tie type system for the connections of the apron to the box and wingwalls. Connect the wingwalls to the last barrel section by the use of tie bolts, steel-bolted plates or other approved method so the inside corner surface is smooth.

Use ASTM A36 steel for bolts, plates, angles, and studs. Use heavy hex nuts meeting the requirements of ASTM A563 and washers meeting ASTM F436, Type 1. Provide welded pipe sleeves meeting the requirements of ASTM A53, Grade B. Galvanize hardware and structural steel according to Section 854.

Welders are to meet the requirements of Section 105.06 D. Galvanize field welds according to Section 854.02.

Cast holes at 3'-0" centers through the apron and into the cutoff wall to receive ¾" diameter reinforcing bars. Cast holes in the last barrel section at 1'-0" centers for ½" diameter reinforcing bars to attach the parapet. Cast parapet against the section. Install the bars according to the manufacturer’s recommendations, with a high strength adhesive specifically intended for concrete anchorage, in accordance with Section 806.02.

For the 12" cap, use a weatherproof and freeze/thaw resistant, non-shrink cement grout material such as SikaGrout® 212, BASF Masterflow® 928, Euclid NS Grout, or an approved equal which complies with ASTM C1107.

This document was originally issued and sealed by Brian W. Raschke, Registration Number PE-4361, on 11/10/15 and the original document is stored at the North Dakota Department of Transportation.

STATE	PROJECT NUMBER	SECTION NO.	SHEET NO.
ND	SOIB-7-058(013)000	170	14

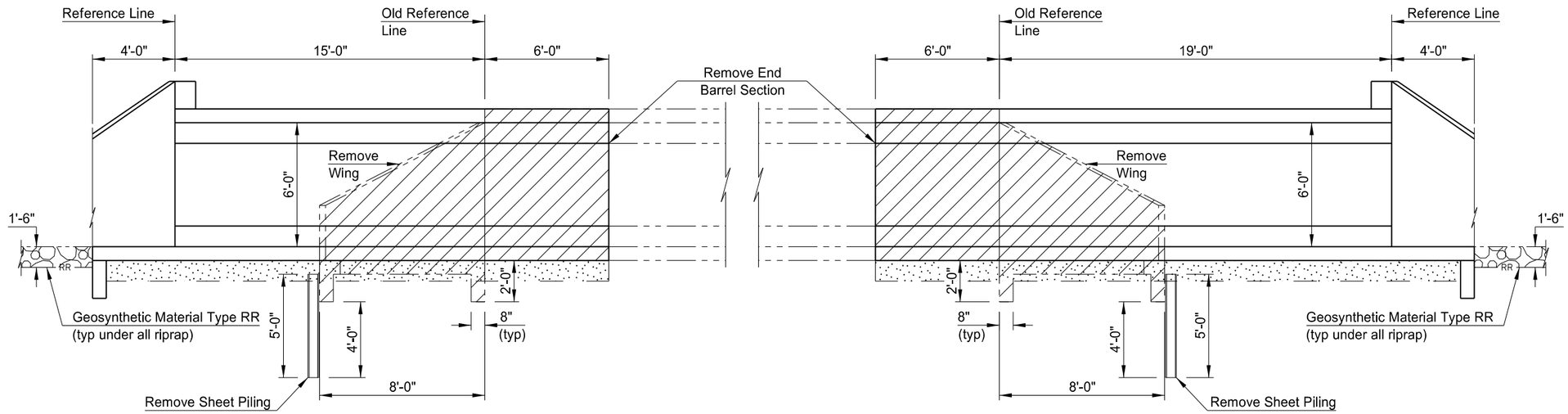

A-A

Hatched area indicates concrete to be removed.

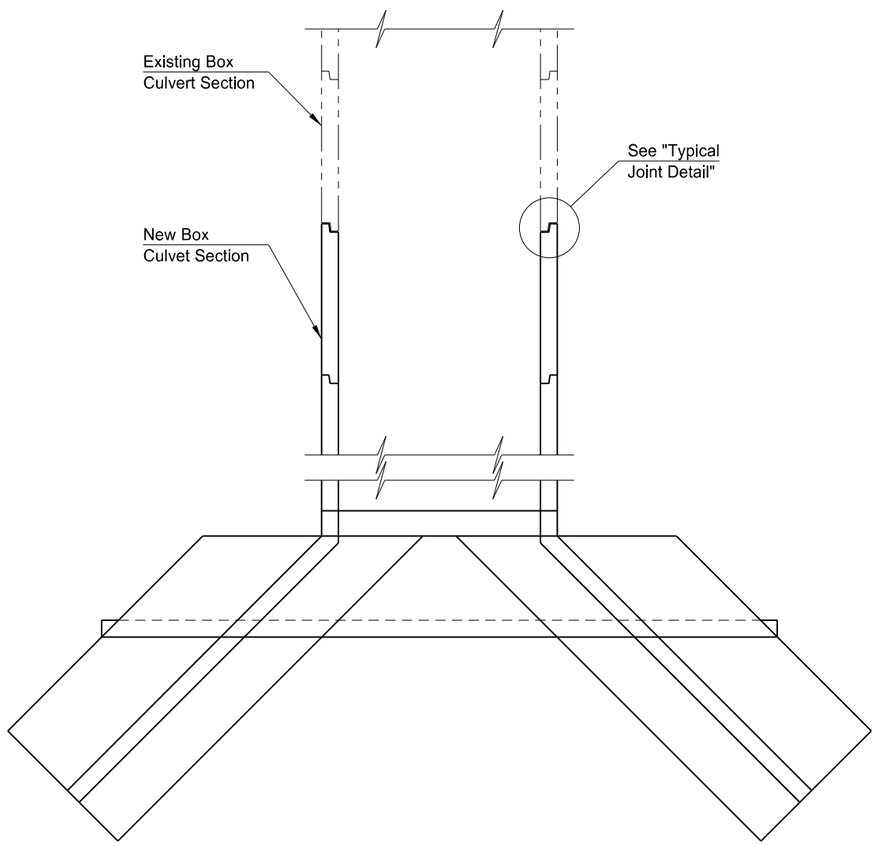

PLAN

NOTE:

See Dwg 58-009.046-1 for location of Section A-A.

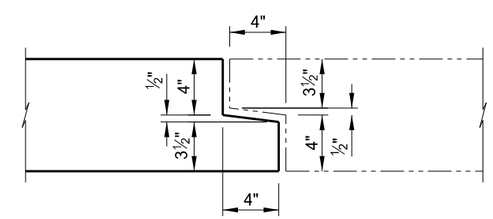

TYPICAL JOINT DETAIL

This document was originally issued and sealed by Brian W. Raschke, Registration Number PE 4361, on 11/10/15 and the original document is stored at the North Dakota Department of Transportation

IRRIGATION DITCH
1 MILE SOUTH OF ND 1804

REMOVAL & BOX EXTENSION DETAILS

STATE	PROJECT NO.	SECTION NO.	SHEET NO.
ND	SOIB-7-058(013)000	180	1

NORTH DAKOTA DEPARTMENT OF TRANSPORTATION

TEST HOLE PLAT

Location: SE1/4SW1/4 31-152-103 & NE1/4NW1/4 6-151-103 County: McKenzie

Ownership: James & Diana Gullikson, Cartwright, ND

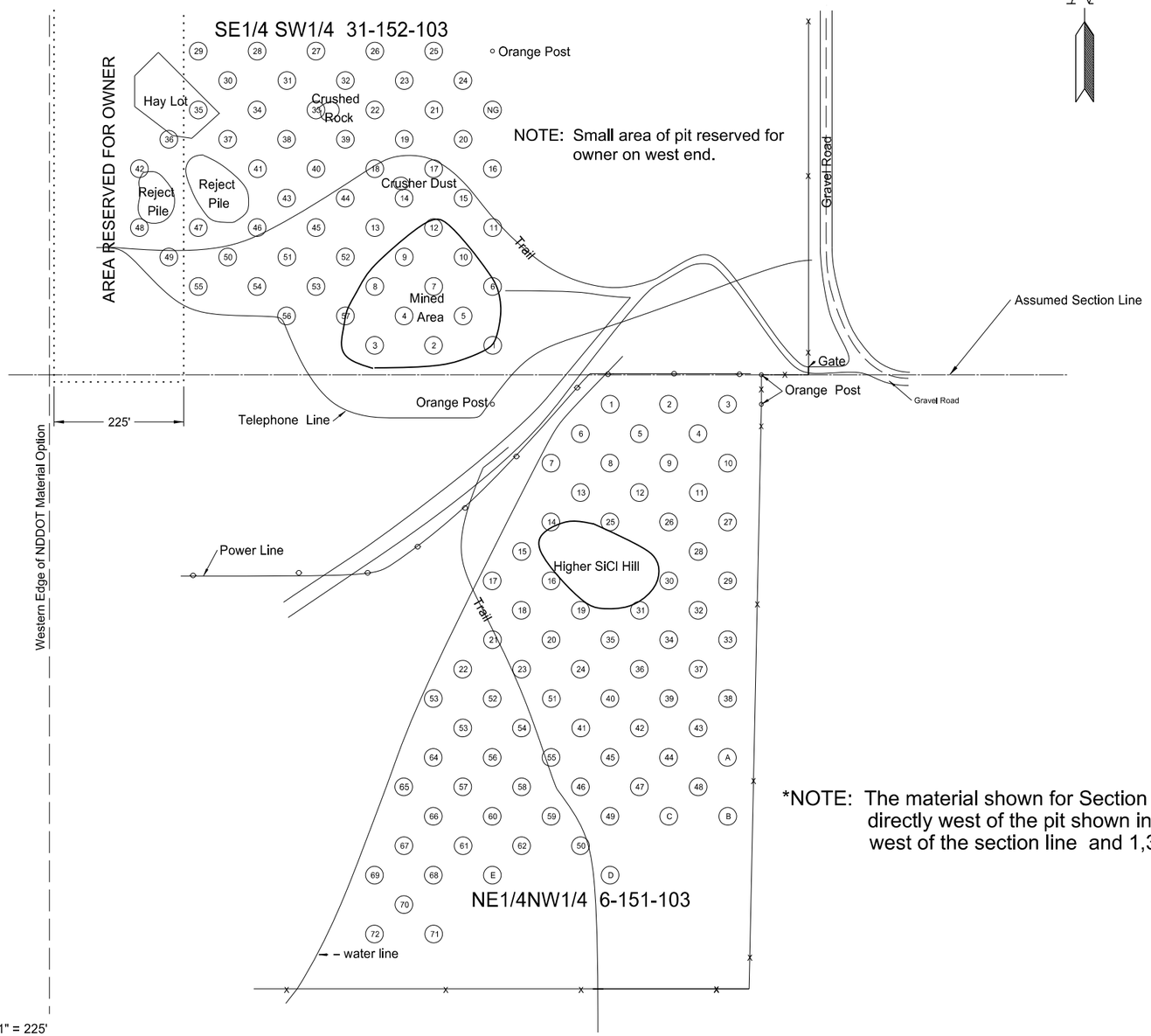

Scale 1" = 225'

LOCATION OF PIT IN SECTION

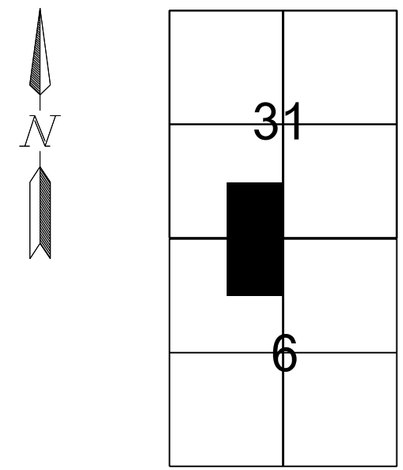

SE1/4SW1/4 31-152-103
Area "A" consists of Test Holes 1 - 13
Area "B consists of Test Holes 14 - 26
Area "C" consists of Test Holes 27 - 39
Area "D" consists of Test Holes 40 - 48
Area "E" consists of Test Holes 49 - 57

NE1/4NW1/4 6-151-103
Area "A" consists of Test Holes 1 - 13
Area "B consists of Test Holes 14 - 24
Area "C" consists of Test Holes 25 - 37
Area "D" consists of Test Holes 38 - 50
Area "E" consists of Test Holes 51 - 62
Area "F" consists of Test Holes 63 - 72

Legend:
gr = gravel
sd = sand
FS = fine sand
Fgr = fine gravel
CS = coarse sand
sh = shale
SiCl = silt clay
rk = rock
FeO = Iron oxide
CoS = Coal Slack
WL = water line
NG = no gravel

*NOTE: The material shown for Section 6 may now be depleted. More material may be available directly west of the pit shown in Section 6. The NDDOT Material Option includes 1,320 feet west of the section line and 1,320 feet south of the section line in Section 6.

STATE	PROJECT NO.	SECTION NO.	SHEET NO.
ND	SOIB-7-058(013)000	180	2

PIT LOGGING BY TEST HOLES

Test Hole No.	Depth of Stripping (Ft)	Depth of Material (Ft)	% Retained on 1½" Screen	% Retained on ¾" Screen	% Retained on 3/8" Screen	% Retained on #4 Screen	Bottom of Test Hole
1	1.5	9.0 gr	0	18	45	62	+WL16.5
		1.5 FS					
		4.5 gr					
2	0.5	0.5 gr	0	16	33	42	+WL 7.0
		1.0 Fgr					
		1.0 Fgr SiCl					
		1.0 Fgr					
		1.0 Fgr SiCl					
		2.0 gr					
3	0.5	4.5 gr	2	17	32	51	+WL 5.0
4	0.5	3.5 gr	1	24	48	62	+WL 4.0
5	5.0	1.0 gr	3	18	28	35	+WL 8.0
		1.0 FS					
		1.0 gr					
6	0.5	5.5 gr SiCl	1	12	27	33	+WL14.0
		1.0 gr					
		0.5 FS					
		0.5 Fgr					
		4.0 gr					
		2.0 FS					
7	0.5	3.5 gr	0	12	24	37	+WL 4.0
8	0.5	4.5 gr	1	26	48	58	+WL 5.0
9	0.5	1.5 gr	1	22	33	37	+WL 2.0
10	2.0	1.0 sd	2	21	40	50	+WL 8.0
		4.0 gr					
		1.0 FS					
11	1.0	1.0 Fgr	2	21	41	54	+WL17.0
		8.0 gr					
		1.0 Fgr					
		2.0 gr					
		1.0 Fgr					
		3.0 gr					
12	0.5	0.5 FS	1	21	44	55	+WL 3.0
		2.0 gr					
13	0.5	5.5 Fgr	0	9	22	29	+WL 9.0
		1.0 sd					
		1.0 Fgr					
		1.0 gr					
14	0.5	2.5 FS	0	7	19	29	+WL 8.0
		3.0 gr					
		2.0 FS					
15	2.0	1.0 gr	1	17	35	43	+WL13.0
		1.0 sd					
		6.0 gr					
		2.0 FS					
		1.0 gr					

PIT LOGGING BY TEST HOLES

Test Hole No.	Depth of Stripping (Ft)	Depth of Material (Ft)	% Retained on 1½" Screen	% Retained on ¾" Screen	% Retained on 3/8" Screen	% Retained on #4 Screen	Bottom of Test Hole
16	0.5	0.5 Fgr	1	13	29	37	+WL 9.5
		1.0 FS					
		1.0 Fgr					
		2.0 FgrSiCl					
		1.0 FS					
		3.0 gr					
17	1.0	2.0 FS	0	15	33	40	+WL 7.0
		3.0 gr					
		1.0 FS					
18	0.5	6.5 gr	0	16	36	48	+WL 8.0
		1.0 sd					
19	0.5	3.5 gr	0	10	27	35	+WL 6.0
		1.0 FS					
		1.0 gr					
20	0.5	2.5 Fgr	0	14	32	43	+WL10.0
		3.0 gr					
		0.5 FS					
		3.5 gr					
21	0.5	5.5 gr	0	14	33	44	+WL 6.0
22	0.5	0.5 sd	0	12	29	42	+WL 6.0
		4.5 gr					
		0.5 Fgr					
23	0.5	1.5 sd	0	9	19	25	+WL 9.0
		1.0 sd SiCl					
		1.0 FS					
		3.0 gr					
		1.0 FS					
		1.0 gr					
24	0.5	2.5 sd	0	4	12	17	+WL10.0
		1.0 Fgr SiCl					
		3.0 gr					
		3.0 FS					
25	0.5	2.5 sd SiCl	0	11	25	31	+WL 9.0
		5.0 gr					
		1.0 FS					
26	0.5	3.5 FS	0	6	15	20	+WL12.0
		1.0 sd					
		1.0 FS					
		1.0 Fgr					
		2.0 gr					
		3.0 FS					
27	0.5	2.5 gr	0	9	19	26	+WL 7.0
		4.0 FS					
28	0.5	3.5 gr	2	28	44	50	+WL 8.0
		1.0 FS					
		3.0 gr					
29	0.5	4.5 gr	1	21	44	50	+WL 9.0
		2.0 FS					
		2.0 gr					
30	0.5	7.5 gr	4	29	51	60	+WL 8.0

PIT LOGGING BY TEST HOLES

Test Hole No.	Depth of Stripping (Ft)	Depth of Material (Ft)	% Retained on 1½" Screen	% Retained on ¾" Screen	% Retained on 3/8" Screen	% Retained on #4 Screen	Bottom of Test Hole
31	0.5	6.0 gr	3	23	55	75	+WL 6.5
32	0.5	5.5 gr	0	16	37	49	+WL 6.0
33	0.5	1.5 gr	0	11	32	47	+WL 5.0
		1.0 FS					
		2.0 gr					
34	0.5	5.5 gr	3	19	45	63	+WL 6.0
35	0.5	7.5 gr	2	31	53	69	+WL 8.0
36	0.5	4.5 FS SiCl	0	20	35	45	+WL 8.5
		3.5 gr					
37	0.5	1.5 gr	0	10	28	37	+WL 5.0
		1.0 FS					
		1.0 gr					
		1.0 FS					
38	0.5	5.5 gr	0	17	38	48	+WL 6.0
39	1.0	4.0 gr	0	13	31	44	+WL 5.0
40	0.5	1.5 gr	0	9	24	33	+WL 6.0
		4.0 FS SiCl					
41	0.5	5.5 gr	0	13	36	48	+WL 6.0
42	0.5	2.5 sd	0	7	17	28	+WL 7.0
		4.0 gr					
43	0.5	4.5 gr	0	21	46	60	+WL 8.0
		1.0 FS					
		2.0 gr					
44	0.5	3.5 gr	0	6	19	27	+WL 7.0
		3.0 sd SiCl					
45	0.5	3.0 gr	0	15	36	52	+WL 9.0
		0.5 FS					
		1.5 gr					
		0.5 Fgr					
		3.0 gr					
46	0.5	0.5 gr	2	22	42	54	+WL 8.5
		1.0 sd					
		4.0 gr					
		1.0 FS					
		1.5 gr					
47	1.0	1.0 Fgr	0	16	39	53	+WL 8.0
		6.0 gr					
48	0.5	2.5 FS	0	11	24	31	+WL 8.0
		2.0 gr					
		2.0 FS					
		1.0 gr					
49	1.5	7.5 gr	2	22	43	58	+WL 12.0
		1.0 gr Si Cl					
		2.0 gr					
50	0.5	6.0 FS	0	9	21	31	+WL 10.5
		1.5 Fgr					
		2.5 gr					
51	0.5	5.5 gr	3	25	41	51	+WL 9.5
		2.0 FS					
		1.5 gr					

PIT LOGGING BY TEST HOLES

Test Hole No.	Depth of Stripping (Ft)	Depth of Material (Ft)	% Retained on 1½" Screen	% Retained on ¾" Screen	% Retained on 3/8" Screen	% Retained on #4 Screen	Bottom of Test Hole
52	0.5	1.5 gr	0	13	25	30	+WL 10.0
		2.0 FS					
		3.0 gr					
		5.0 Fgr					
		2.5 FS					
53	0.5	1.5 gr	0	15	29	37	+WL 9.5
		5.0 FS					
		2.5 gr					
54	0.5	0.5 Fgr	0	23	46	59	+WL 11.0
		10.0 gr					
55	5.0	6.0 gr	2	20	38	52	+Cave
		2.0 FS					
56	0.5	2.0 gr	0	11	24	34	+WL 10.0
		4.5 FS					
		2.0 gr					
		1.0 FS					
57	0.5	6.0 gr	0	21	42	54	+WL 6.5

RANGE 103 **TWP** 152 **SEC** SE¼SW¼ 31

COUNTY McKenzie Sep-08

PROSPECTED BY Volk/Swenson

INSPECTED & APPROVED Carter Jun-09

STATE	PROJECT NO.	SECTION NO.	SHEET NO.
ND	SOIB-7-058(013)000	180	3

PIT LOGGING BY TEST HOLES

Test Hole No.	Depth of Stripping (Ft)	Depth of Material (Ft)	% Retained on 1½" Screen	% Retained on ¾" Screen	% Retained on 3/8" Screen	% Retained on #4 Screen	Bottom of Test Hole
1	1.0	2.0 sd	2	25	46	58	+
		2.0 gr					
		1.5 sd					
		13.5 gr					
2	4.0	2.0 FS	2	14	33	45	+
		10.5 gr					
		0.5 gr SiCl					
		1.5 gr					
		0.5 gr CoS					
		1.0 gr					
3	2.0	2.0 gr	1	15	36	51	+
		1.0 FS					
		2.0 Fgr					
		1.0 FS SiCl					
		6.0 gr					
		1.0 FS					
		2.0 gr					
		1.0 FS					
		2.0 gr					
4	2.0	2.0 FS SiCl	1	20	41	54	+
		14.5 gr					
		0.5 gr CoS					
		1.0 Fgr					
5	0.5	1.0 sd	1	23	48	60	+
		2.5 Fgr					
		14.0 gr					
		1.0 FS					
		1.0 gr					
6	0.5	1.5 sd	2	18	44	58	+
		15.5 gr					
		1.5 Fgr					
7	0.5	0.5 sd	2	25	49	63	+
		2.0 Fgr					
		17.0 gr					
8	1.0	1.0 Fgr	3	22	49	62	+
		1.0 sd					
		8.0 gr					
		2.0 FS					
		2.0 gr					
		2.0 gr SiCl					
		3.0 gr					
9	1.0	2.0 sd	0	21	43	55	+
		15.5 gr					
		1.5 FS					
10	0.5	1.5 FS	3	22	49	62	+
		18.0 gr					
11	0.5	2.5 sd	1	20	42	56	+
		2.0 Fgr					
		15.0 gr					

PIT LOGGING BY TEST HOLES

Test Hole No.	Depth of Stripping (Ft)	Depth of Material (Ft)	% Retained on 1½" Screen	% Retained on ¾" Screen	% Retained on 3/8" Screen	% Retained on #4 Screen	Bottom of Test Hole
12	1.0	2.0 sd SiCl	3	28	54	65	+
		14.0 gr					
		2.0 gr SiCl					
		1.0 gr					
13	2.0	16.0 gr	0	16	44	61	+
		2.0 FS					
14	8.0	1.0 sd Si Cl	0	11	31	43	+
		1.0 Fgr					
		2.0 gr					
		2.0 FS					
		6.0 gr					
15	4.0	0.5 FS	0	21	44	59	+
		4.0 gr					
		0.5 FS					
		11.0 gr					
16	9.0	4.0 Fgr	0	7	26	43	+
		1.0 gr					
		1.0 FS					
		4.0 Fgr					
		1.0 FS					
17	3.0	2.0 Fgr	1	14	34	44	+
		8.0 gr					
		5.0 FS					
		1.0 gr					
		1.0 FS					
18	5.0	1.5 FS	2	16	34	46	+
		4.5 gr					
		1.0 FS					
		8.0 gr					
19	6.0	9.0 FS	0	0	1	3	+ Cave
20	4.0	1.5 FS	0	16	27	34	+
		1.5 gr					
		1.0 FS					
		2.0 gr					
		1.0 FS					
		1.0 Fgr					
		3.0 gr					
		2.0 FS Si Cl					
		0.5 Fgr					
		0.5 FS					
		2.0 gr					
21	1.0	1.0 FS	2	22	47	60	+
		18.0 gr					
22	1.0	1.0 FS	1	17	36	47	+
		2.0 gr					
		0.5 FS					
		1.5 Fgr					
		12.0 gr					

PIT LOGGING BY TEST HOLES

Test Hole No.	Depth of Stripping (Ft)	Depth of Material (Ft)	% Retained on 1½" Screen	% Retained on ¾" Screen	% Retained on 3/8" Screen	% Retained on #4 Screen	Bottom of Test Hole
23	2.0	1.5 sd	1	20	38	49	+
		3.5 gr					
		1.0 FS					
		4.5 gr					
		3.5 FS					
		4.0 gr					
24	2.0	1.5 FS	3	17	37	47	+
		6.5 gr					
		1.0 sd					
		3.5 gr					
		0.5 sd					
		1.5 gr					
		0.5 FS					
		3.0 gr					
25	5.0	7.0 gr	1	21	45	57	+
		2.0 FS					
		6.0 gr					
26	1.0	2.0 FS	3	19	37	50	+
		4.5 gr					
		1.5 FS					
		9.5 gr					
		1.0 FS					
		0.5 Fgr					
27	1.0	3.0 FS	1	18	41	54	+
		13.0 gr					
		1.5 FS					
		1.5 gr					
28	2.0	2.0 sd	0	13	38	52	+
		8.5 gr					
		1.5 Fgr					
		4.5 gr					
		1.5 gr Co S					
29	4.0	2.0 sd	1	13	32	46	+
		2.5 FS					
		4.5 gr					
		4.0 Fgr					
		3.0 gr					
30	7.0	5.0 gr	0	16	37	50	+
		1.0 gr Si Cl					
		1.0 gr					
		1.0 gr Si Cl					
		2.0 gr					
		2.0 FS					
		1.0 Fgr					
31	8.0	2.0 FS Si Cl	0	15	33	46	+
		1.0 FS					
		9.0 gr					
32	7.0	6.0 gr	2	21	44	61	+
		1.0 gr Si Cl					
		6.0 gr					

PIT LOGGING BY TEST HOLES

Test Hole No.	Depth of Stripping (Ft)	Depth of Material (Ft)	% Retained on 1½" Screen	% Retained on ¾" Screen	% Retained on 3/8" Screen	% Retained on #4 Screen	Bottom of Test Hole
33	4.0	8.0 FS	0	14	30	39	+
		8.0 gr					
34	2.5	1.0 FS	0	14	37	49	+
		0.5 Fgr					
		6.5 gr					
		0.5 FS					
		9.0 gr					
35	2.0	7.0 FS	0	18	35	42	+
		9.0 gr					
		1.0 FS					
		1.0 gr					
36	2.0	2.0 FS	1	14	31	42	+
		1.0 sd					
		1.0 Fgr					
		1.0 gr					
		1.0 FS					
		6.5 gr					
		2.5 FS					
		3.0 gr					
37	5.0	1.0 FS	0	15	41	54	+
		4.0 gr Si Cl					
		6.0 gr					
		1.0 FS					
		1.0 gr					
		1.5 gr Si Cl					
		0.5 gr					
38	6.0	10.0 FS	0	4	13	17	+
		4.0 gr					
39	3.0	2.0 FS	1	19	44	57	+
		6.5 gr					
		1.5 Fgr					
		7.0 gr					
40	1.0	19.0 gr	2	17	39	56	+
41	2.0	3.0 gr	1	17	36	48	+
		1.0 FS					
		1.0 Fgr					
		1.0 FS					
		5.0 gr					
		1.0 FS					
		6.0 gr					

RANGE 103 **TWP** 152 **SEC** NE¼ NW¼ 6

COUNTY McKenzie Sep-08

PROSPECTED BY Volk/Swenson

INSPECTED & APPROVED Carter Jun-09

STATE	PROJECT NO.	SECTION NO.	SHEET NO.
ND	SOIB-7-058(013)000	180	4

PIT LOGGING BY TEST HOLES

Test Hole No.	Depth of Stripping (Ft)	Depth of Material (Ft)	% Retained on 1½" Screen	% Retained on ¾" Screen	% Retained on 3/8" Screen	% Retained on #4 Screen	Bottom of Test Hole
42	2.0	2.0 FS	3	20	44	57	+
		16.0 gr					
43	3.5	4.5 FS	0	9	23	30	+
		2.0 sd					
		2.0 gr					
		1.0 FS					
		1.5 gr					
		3.5 FS					
		2.0 gr					
44	6.0	2.0 FS	0	11	33	47	+
		1.0 gr					
		1.0 FS					
		4.0 gr					
		1.0 Fgr					
		5.0 gr					
45	3.0	1.0 sd	1	22	46	57	+
		4.0 gr					
		1.0 FS					
		1.0 gr					
		1.0 FS					
		9.0 gr					
46	6.0	1.0 Fgr	1	23	46	56	+
		4.0 gr					
		2.0 FS					
		7.0 gr					
47	6.0	1.0 sd	1	18	39	51	+
		1.0 Fgr					
		5.0 gr					
		1.0 FS					
		1.0 Fgr					
		5.0 gr					
48	7.0	6.0 FS	0	9	27	40	+
		7.0 gr					
49	8.0	1.0 FS	1	14	36	50	+
		8.5 gr					
		0.5 FS					
		2.0 gr					
50	6.0	1.0 FS	0	12	27	38	+
		1.0 Fgr					
		1.0 FS					
		1.0 Fgr Co S					
		1.0 Fgr Si Cl					
		2.0 FS					
		7.0 gr					
51	2.0	1.0 FS	0	20	40	50	+
		9.0 gr					
		0.5 FS					
		1.5 Fgr					
		6.0 gr					

PIT LOGGING BY TEST HOLES

Test Hole No.	Depth of Stripping (Ft)	Depth of Material (Ft)	% Retained on 1½" Screen	% Retained on ¾" Screen	% Retained on 3/8" Screen	% Retained on #4 Screen	Bottom of Test Hole
52	2.5	1.5 gr	1	21	41	54	+
		2.0 FS					
		11.0 gr					
		2.0 FS					
		1.0 gr					
53	2.0	0.5 gr	3	28	54	65	+
		1.5 FS					
		16.0 gr					
54	3.0	2.5 gr	1	14	34	46	+
		3.5 FS					
		3.0 gr					
		1.0 FS					
		1.0 gr					
		1.0 FS					
		5.0 gr					
55	4.0	0.5 FS	1	18	37	48	+
		2.5 gr					
		3.0 FS					
		10.0 gr					
56	2.0	1.0 FS	0	10	24	35	+
		4.0 gr					
		1.0 FS					
		1.0 Fgr					
		1.0 FS					
		1.0 FS					
		1.0 Fgr					
		4.0 gr					
		1.0 FS					
		1.0 Fgr					
		1.0 FS					
		1.0 Fgr					
57	2.0	2.5 FS	1	18	35	45	+
		4.5 gr					
		5.0 FS					
		5.0 gr					
		1.0 FS					
58	2.0	3.0 FS	2	17	38	49	+
		1.0 Fgr					
		6.0 gr					
		0.5 FS					
		0.5 Fgr					
		7.0 gr					
59	4.0	1.5 gr	1	14	32	42	+
		2.5 FS					
		8.0 gr					
		1.0 FS					
		2.0 gr					
		1.0 FS					

PIT LOGGING BY TEST HOLES

Test Hole No.	Depth of Stripping (Ft)	Depth of Material (Ft)	% Retained on 1½" Screen	% Retained on ¾" Screen	% Retained on 3/8" Screen	% Retained on #4 Screen	Bottom of Test Hole
60	5.0	3.0 FS	0	18	38	46	+
		7.0 gr					
		1.0 sd					
		4.0 gr					
61	2.0	2.0 FS	0	7	19	29	+
		2.0 FS Co S					
		1.0 Fgr					
		2.0 FS					
		1.0 sd Si Cl					
		1.0 FS					
		9.0 gr					
62	8.5	1.5 FS	0	14	33	45	+
		1.0 Fgr					
		1.0 FS					
		2.0 Fgr					
		6.0 gr					
63	1.0	1.0 FS	2	20	45	58	+
		1.0 Fgr					
		17.0 gr					
64	2.0	7.0 gr	2	26	46	57	+
		3.0 FS					
		4.0 gr					
		1.0 FS					
		3.0 gr					
65	1.0	1.0 Fgr	0	19	44	56	+
		8.0 gr					
		1.0 FS					
		9.0 gr					
66	3.5	1.5 FS	1	18	38	49	+
		6.0 gr					
		3.0 FS					
		6.0 gr					
67	5.5	1.5 FS	0	16	42	55	+
		9.0 gr					
		1.0 FS					
		3.0 gr					
68	6.0	1.0 sd	0	12	27	38	+
		1.0 gr					
		3.0 FS					
		2.0 gr					
		1.0 FS					
		6.0 gr					
69	5.5	0.5 FS	0	14	36	50	+
		2.0 Fgr					
		7.0 gr					
		1.0 sd					
		4.0 gr					
70	4.0	1.0 gr	0	6	19	27	+
		10.0 FS					
		5.0 gr					

PIT LOGGING BY TEST HOLES

Test Hole No.	Depth of Stripping (Ft)	Depth of Material (Ft)	% Retained on 1½" Screen	% Retained on ¾" Screen	% Retained on 3/8" Screen	% Retained on #4 Screen	Bottom of Test Hole
71	3.5	4.5 sd	0	0	4	3	+
		12.0 FS					
72	6.0	4.0 sd	1	12	29	42	+
		4.0 gr					
		1.5 FS					
		3.0 gr					
		1.5 FS					
A	1.0	3.0 FS	0	0	0	0	+
		1.0 sd Si Cl					
		16.0 FS					
B	6.0	14.0 FS	0	0	0	0	+
C	1.0	14.0 FS	0	0	2	3	+
		0.5 Fgr					
		3.5 FS					
		1.0 Fgr					
D	8.0	2.0 FS Si Cl	0	2	7	10	+
		1.0 gr Si Cl					
		1.0 FS Si Cl					
		8.0 FS					
E	2.0	1.0 FS	0	0	5	8	+
		1.0 Fgr					
		1.0 sd Co S					
		2.0 Fgr					
		3.0 sd					
		2.0 Fgr					
		1.0 FS					
		1.5 Fgr					
		0.5 gr					

***NOTE: THE MATERIAL IN SECTION 6 MIGHT BE DEPLETED**

RANGE 103 **TWP** 151 **SEC** NE¼ NW¼ 6

COUNTY McKenzie Sep-08

PROSPECTED BY Volk/Swenson

INSPECTED & APPROVED Carter Jun-09

STATE	PROJECT NO.	SECTION NO.	SHEET NO.
ND	SOIB-7-058(013)000	180	5

NORTH DAKOTA DEPARTMENT OF TRANSPORTATION

TEST HOLE PLAT

Location: SE1/4 10-24-59 County: Richland, MT

Ownership: Prewitt Land & Livestock

LOCATION OF PIT IN SECTION

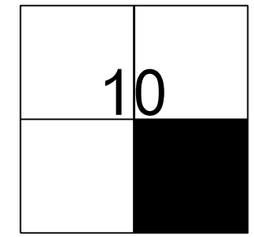

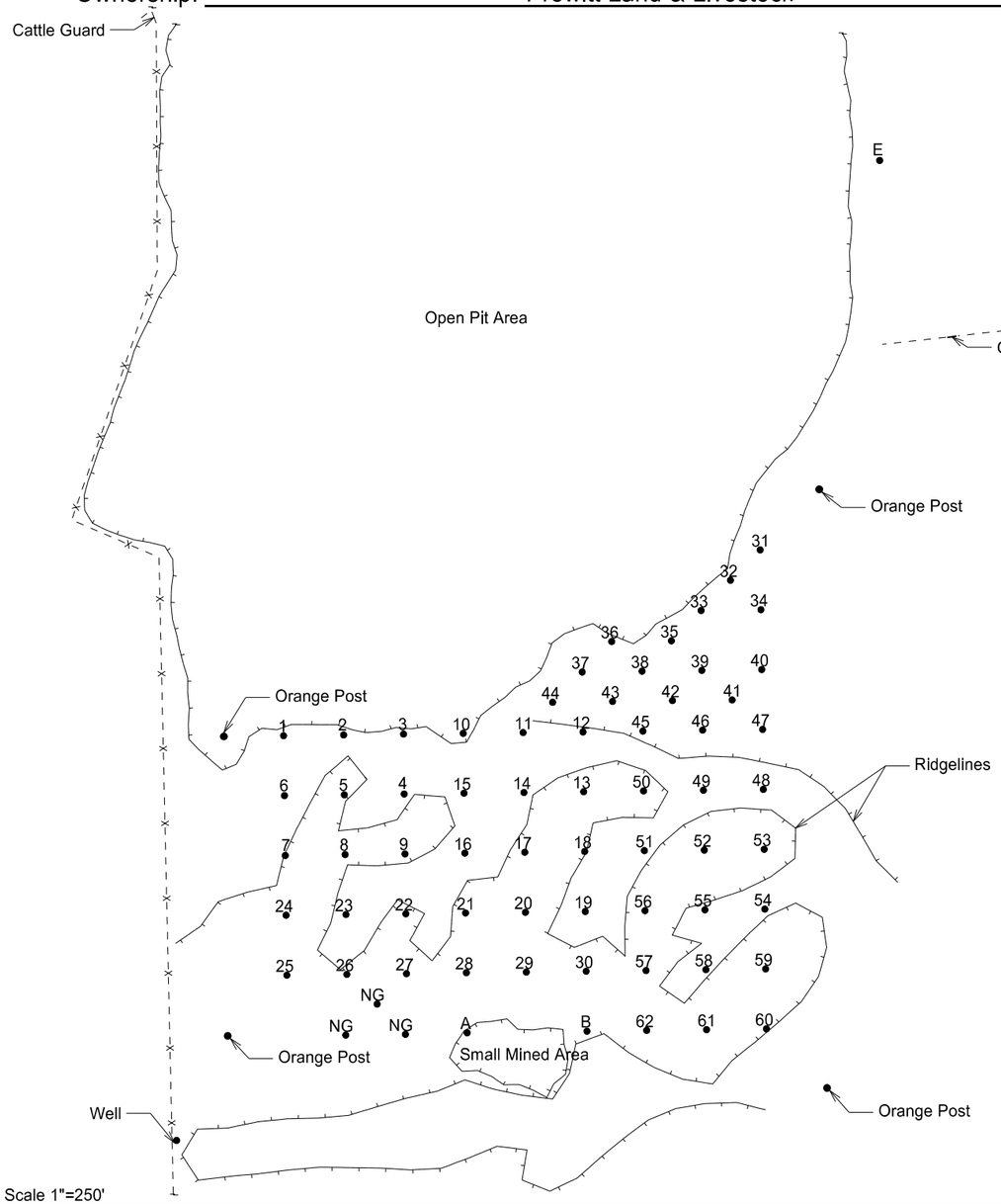

Area "A" consists of test holes 1-9
Area "B" consists of test holes 10-18
Area "C" consists of test holes 19-30
Area "D" consists of test holes 31-44
Area "E" consists of test holes 45-53
Area "F" consists of test holes 54-62
Test Holes A-E are for Information only

Legend
gr = gravel
Fgr = fine gravel
CGr = coarse gravel
sd = sand
FS = fine sand
CS = coarse sand
sh = shale
SiCl = silt clay
rk = rock
FeO = iron oxide
CoS = coal slack
NG = no gravel
DM = disturbed material
WL = water line

11/12/2015 9:23:43 AM johne S:\2013proj\13205B\Project\7058000013\Design\Pit Plats\1002405901_Prewitt.dgn

STATE	PROJECT NO.	SECTION NO.	SHEET NO.
ND	SOIB-7-058(013)000	180	6

PIT LOGGING BY TEST HOLES

Test Hole No.	Depth of Stripping (Ft)	Depth of Material (Ft)	% Retained on 1½" Screen	% Retained on ¾" Screen	% Retained on 3/8" Screen	% Retained on #4 Screen	Bottom of Test Hole
1	0.5	6.0 gr	0	15	38	55	+
		0.5 sd					
		4.0 gr					
		1.0 Fgr					
		6.0 gr					
		2.0 gr Si Cl					
2	2.0	3.0 gr	1	16	37	53	+
		1.0 FS					
		1.0 sd					
		13.0 gr					
3	1.0	4.0 gr	1	16	35	51	+
		2.0 sd					
		1.0 FS					
		12.0 gr					
4	2.0	1.0 Fgr Si Cl	0	13	37	53	+
		2.0 gr					
		1.0 Fgr Si Cl					
		11.0 gr					
		1.0 gr Co S					
		2.0 gr					
5	0.5	2.5 gr	1	17	40	55	Si Cl
		1.0 FS					
		8.0 gr					
		2.0 FS					
		5.0 gr					
6	0.5	0.5 Fgr Si Cl	0	11	33	48	Si Cl
		9.0 gr					
		1.0 sd Si Cl					
		0.5 sd					
		0.5 Fgr					
		3.0 gr					
		3.0 gr Si Cl					
7	0.5	4.0 gr	1	15	36	50	Si Cl
		0.5 FS					
		1.5 gr					
		2.5 FS					
		4.5 gr					
8	1.0	1.0 gr Si Cl	0	10	31	45	Si Cl
		2.0 gr					
		1.0 gr Co S					
		1.0 gr					
		1.0 sd					
		4.0 gr					
		1.0 gr Si Cl					
9	0.5	1.5 gr Si Cl	2	24	44	55	+
		13.0 gr					
		1.0 FS					
		4.0 gr					

PIT LOGGING BY TEST HOLES

Test Hole No.	Depth of Stripping (Ft)	Depth of Material (Ft)	% Retained on 1½" Screen	% Retained on ¾" Screen	% Retained on 3/8" Screen	% Retained on #4 Screen	Bottom of Test Hole
10	0.5	1.0 FS	1	19	36	47	+
		3.5 gr					
		1.0 FS					
		4.0 gr					
		1.0 Si Cl					
		2.0 gr					
		3.0 FS					
		4.0 gr					
11	2.0	11.5 gr	0	13	31	46	+
		0.5 sd					
		3.0 gr					
		1.0 sd					
		2.0 gr					
12	1.0	2.0 sd	0	14	30	41	+
		1.5 Fgr					
		3.0 gr					
		1.0 FS					
		3.0 gr					
		1.0 FS					
		4.5 gr					
		3.0 FS					
13	0.5	2.5 gr	0	10	29	42	+
		2.0 sd					
		1.0 gr					
		0.5 Fgr					
		1.0 gr					
		1.5 sd					
		1.0 Fgr					
		6.5 gr					
		0.5 sd					
		1.0 Fgr					
		2.0 gr					
14	2.0	2.0 sd	1	16	35	47	+
		14.0 gr					
		1.0 sd					
		1.0 Fgr					
15	2.0	0.5 sd Si Cl	0	16	39	55	+
		0.5 Fgr					
		17.0 gr					
16	0.5	2.5 gr Si Cl	1	15	30	39	+
		4.0 gr					
		6.0 FS					
		4.0 gr					
		1.5 gr Si Cl					
		1.5 gr					

PIT LOGGING BY TEST HOLES

Test Hole No.	Depth of Stripping (Ft)	Depth of Material (Ft)	% Retained on 1½" Screen	% Retained on ¾" Screen	% Retained on 3/8" Screen	% Retained on #4 Screen	Bottom of Test Hole
17	0.5	0.5 gr Si Cl	0	12	34	48	+
		1.0 sd					
		1.0 sd Si Cl					
		1.0 gr					
		1.0 Fgr					
		1.0 gr					
		1.0 sd					
		6.0 gr					
		2.0 gr Si Cl					
		1.0 Fgr					
		2.0 gr					
		1.0 gr Co S					
		1.0 gr					
18	0.5	1.5 gr Si Cl	0	15	28	37	+
		4.0 gr					
		0.5 Si Cl					
		2.5 FS					
		1.0 gr					
		2.0 sd					
		1.0 FS Co S					
		2.0 gr					
		3.0 FS					
		2.0 gr					
19	4.0	3.0 sd	0	17	35	44	+
		13.0 gr					
20	2.0	1.0 sd Si Cl	0	16	36	48	Si Cl
		8.0 gr					
21	1.5	0.5 Fgr Si Cl	0	12	30	45	Si Cl
		2.5 gr					
		0.5 sd					
		1.0 gr					
		2.0 sd					
		1.0 sd					
		2.0 gr					
		1.0 gr					
		2.0 gr Si Cl					
22	1.5	0.5 Fgr Si Cl	0	17	38	52	Si Cl
		9.0 gr					
		1.0 Fgr					
		3.0 gr					
		1.0 gr Si Cl					
23	0.5	1.5 gr Si Cl	1	19	41	53	Si Cl
		8.0 gr					
		0.5 FS					
		0.5 gr					
		2.0 sd					
		3.0 gr					

PIT LOGGING BY TEST HOLES

Test Hole No.	Depth of Stripping (Ft)	Depth of Material (Ft)	% Retained on 1½" Screen	% Retained on ¾" Screen	% Retained on 3/8" Screen	% Retained on #4 Screen	
24	1.0	1.0 Fgr Si Cl	0	4	19	30	Si Cl
		1.5 Fgr					
		0.5 sd					
		1.0 gr Si Cl					
25	0.5	2.5 gr	1	19	40	52	Si Cl
26	1.0	1.0 gr Si Cl	0	13	35	48	Si Cl
		2.0 gr					
		1.0 sd					
		3.0 gr					
		0.5 gr Si Cl					
27	5.0	1.0 sd	0	9	24	35	Si Cl
		2.0 gr					
		1.0 FS					
		2.0 sd					
28	3.0	1.0 Fgr Si Cl	0	8	24	42	Si Cl
		1.0 gr Si Cl					
29	2.5	1.5 gr Si Cl	1	24	43	54	Si Cl
		1.5 gr					
		3.5 gr Si Cl					
30	0.5	12.5 gr	1	13	39	56	Si Cl
31	2.0	8.0 gr	1	17	38	51	Si Cl
		1.0 FS					
		1.0 gr Si Cl					
		4.5 gr					
32	0.5	0.5 gr Si Cl	0	12	32	47	Si Cl
		8.0 gr					
		1.0 Fgr					
		2.0 FS					
		5.0 gr					
		1.0 gr Si Cl					
33	3.0	5.0 gr	0	12	26	36	+
		1.0 sd					
		1.0 gr					
		1.5 sd					
		2.5 gr					
		1.0 gr Si Cl					
		1.0 gr					
		4.0 sd					

RANGE 59 **TWP** 24 **SEC** SE1/4 10

COUNTY Richland MT Oct-15

PROSPECTED BY Volk/Nelson

INSPECTED & APPROVED Jeffrey Swank Oct-15

STATE	PROJECT NO.	SECTION NO.	SHEET NO.
ND	SOIB-7-058(013)000	180	7

PIT LOGGING BY TEST HOLES

Test Hole No.	Depth of Stripping (Ft)	Depth of Material (Ft)	% Retained on 1½" Screen	% Retained on ¾" Screen	% Retained on 3/8" Screen	% Retained on #4 Screen	Bottom of Test Hole
34	3.0	1.0 gr	0	12	28	38	+
		1.0 FS					
		3.0 gr					
		2.0 FS					
		2.0 gr					
		1.0 FS					
		1.0 gr Si Cl					
		2.0 gr					
		1.0 FS					
		1.5 gr					
		1.5 FS					
35	2.5	1.5 sd Si Cl	0	14	35	46	+
		1.0 Fgr					
		3.0 gr					
		1.0 Fgr					
		4.0 gr					
		2.0 gr Si Cl					
		4.0 gr					
		1.0 sd					
36	4.0	7.0 gr	0	13	31	47	+
		1.0 FS					
		4.0 gr					
		2.0 gr Si Cl					
		2.0 FS					
37	4.0	2.0 sd Si Cl	0	10	23	34	+
		1.0 gr					
		1.0 Fgr					
		3.0 gr					
		3.0 sd					
		1.0 sd Si Cl					
		1.0 gr					
		1.0 Fgr					
		1.5 gr					
		1.5 sd					
38	4.0	2.5 FS	0	8	23	34	+
		5.5 gr					
		3.0 FS					
		5.0 gr					
39	2.0	3.0 sd	0	9	25	38	+
		1.0 gr Si Cl					
		6.0 gr					
		2.0 sd					
		2.0 gr					
		1.0 Fgr					
		3.0 gr					
40	3.0	3.0 gr	1	14	32	47	+
		1.0 FS					
		13.0 gr					

PIT LOGGING BY TEST HOLES

Test Hole No.	Depth of Stripping (Ft)	Depth of Material (Ft)	% Retained on 1½" Screen	% Retained on ¾" Screen	% Retained on 3/8" Screen	% Retained on #4 Screen	Bottom of Test Hole
41	1.0	2.0 sd	0	15	30	41	+
		1.0 Fgr					
		1.0 sd					
		2.0 gr					
		1.0 Fgr					
		4.0 gr					
		1.0 Fgr					
		3.5 gr					
		1.5 sd					
		1.0 gr					
		1.0 sd					
42	1.0	1.5 sd	1	8	32	47	+
		1.5 Fgr					
		6.0 gr					
		1.0 FS Co S					
		2.0 gr					
		1.0 sd					
		2.0 gr					
		1.0 FS					
		3.0 gr					
43	1.0	1.0 sd	1	13	36	52	+Cave
		6.0 gr					
		1.0 gr Si Cl					
		8.0 gr					
44	1.0	0.5 sd	1	12	32	44	+
		2.0 gr					
		1.5 sd					
		6.5 gr					
		1.5 FS					
		3.0 gr					
		1.0 FS					
		2.0 Si Cl					
		2.0 gr					
45	1.0	3.0 sd	0	13	31	42	+
		1.0 Fgr					
		2.0 gr					
		2.0 sd					
		3.0 gr					
		1.0 gr Co S					
		5.0 gr					
		1.0 Fgr					
		1.0 gr					
46	4.0	2.0 sd	0	12	28	39	+
		2.0 Fgr					
		7.5 gr					
		0.5 FS					
		4.0 gr					

PIT LOGGING BY TEST HOLES

Test Hole No.	Depth of Stripping (Ft)	Depth of Material (Ft)	% Retained on 1½" Screen	% Retained on ¾" Screen	% Retained on 3/8" Screen	% Retained on #4 Screen	Bottom of Test Hole
47	1.0	1.0 sd Si Cl	0	9	24	35	+
		3.0 sd					
		1.0 Fgr					
		2.0 sd					
		1.0 Fgr					
		1.0 sd					
		1.0 Fgr					
		1.5 gr					
		0.5 sd					
		5.5 gr					
		0.5 sd					
		1.0 gr					
48	4.0	2.0 FS	0	5	11	16	+
		10.0 sd					
		2.0 gr					
		1.0 gr Si Cl					
		1.0 gr					
49	3.0	8.0 sd	0	8	20	31	+
		1.0 Fgr					
		7.0 gr					
		1.0 Fgr Si Cl					
50	2.0	1.0 sd	1	14	28	39	+
		2.0 gr					
		2.0 FS					
		5.0 gr					
		0.5 Si Cl					
		2.5 gr					
		3.0 FS					
		2.0 gr					
51	3.0	2.0 gr	0	12	32	44	+
		1.0 sd					
		5.0 gr					
		1.0 Fgr					
		1.0 gr					
		3.0 sd					
		1.0 Fgr					
		3.0 gr					
52	1.0	1.0 Fgr	1	12	28	38	+
		1.0 FS					
		7.5 gr					
		5.5 FS					
		4.0 gr					
53	2.0	1.0 sd	0	13	31	41	+
		2.0 FS					
		1.0 sd					
		9.0 gr					
		1.0 FS					
		1.0 Fgr Si Cl					
		2.0 gr Si Cl					
		1.0 sd					

PIT LOGGING BY TEST HOLES

Test Hole No.	Depth of Stripping (Ft)	Depth of Material (Ft)	% Retained on 1½" Screen	% Retained on ¾" Screen	% Retained on 3/8" Screen	% Retained on #4 Screen	Bottom of Test Hole
54	4.0	7.5 FS	0	8	19	26	+
		2.5 gr					
		2.0 FS					
		4.0 gr					
55	2.0	9.0 gr	0	15	36	51	+
		1.0 sd					
		1.0 FS					
		5.5 gr					
		0.5 sd					
		1.0 gr					
56	3.5	2.5 FS	1	16	35	47	+
		10.0 gr					
		1.0 FS					
		3.0 gr					
57	1.0	2.0 gr Si Cl	0	13	40	53	Si Cl
		6.0 gr					
		1.0 gr Si Cl					
		3.0 gr					
		1.0 gr Si Cl					
58	0.5	0.5 gr	1	14	33	44	+
		5.0 FS					
		1.0 gr					
		1.5 FS					
		11.5 gr					
59	0.5	0.5 gr	0	15	35	47	+
		1.0 Fgr					
		2.5 gr					
		1.5 sd					
		2.0 FS					
		0.5 sd					
		10.5 gr					
		1.0 sd					
60	5.0	1.0 sd	0	16	32	42	+
		2.0 gr					
		1.0 gr Si Cl					
		4.0 FS					
		7.0 gr					

RANGE 59 **TWP** 24 **SEC** SE1/4 10

COUNTY Richland MT Oct-15

PROSPECTED BY Volk/Nelson

INSPECTED & APPROVED Jeffrey Swank Oct-15

STATE	PROJECT NO.	SECTION NO.	SHEET NO.
ND	SOIB-7-058(013)000	180	8

PIT LOGGING BY TEST HOLES

Test Hole No.	Depth of Stripping (Ft)	Depth of Material (Ft)	% Retained on 1½" Screen	% Retained on ¾" Screen	% Retained on 3/8" Screen	% Retained on #4 Screen	Bottom of Test Hole
61	0.5	0.5 Fgr	2	18	38	51	+
		12.0 gr					
		1.0 Fgr					
		3.0 gr					
		2.0 sd Si Cl					
		1.0 gr					
62	1.5	1.5 gr Si Cl	1	17	39	54	Si Cl
		9.0 gr					

PIT LOGGING BY TEST HOLES

Test Hole No.	Depth of Stripping (Ft)	Depth of Material (Ft)	% Retained on 1½" Screen	% Retained on ¾" Screen	% Retained on 3/8" Screen	% Retained on #4 Screen	Bottom of Test Hole
A	0.5	1.5 gr Si Cl	1	24	46	57	Si Cl
		4.0 gr					
B	0.5	1.5 gr	0	14	36	50	+
		1.0 sd					
		1.0 FS					
		3.0 gr					
		3.0 Fgr					
		7.0 gr					
		3.0 gr Si Cl					
C	2.5	0.5 gr Si Cl	0	12	30	41	+
		2.0 sd					
		2.0 gr					
		2.5 Fgr					
		4.5 gr					
		2.0 sd					
		4.0 gr					
D	1.5	5.5 sd	0	11	24	34	+
		9.0 gr					
		2.0 Fgr					
		2.0 FS					
E	5.0	3.5 gr	2	23	40	52	+
		1.5 sd					
		1.0 gr					
		1.0 Si Cl					
		5.0 gr					
		3.0 gr Si Cl					

PIT LOGGING BY TEST HOLES

Test Hole No.	Depth of Stripping (Ft)	Depth of Material (Ft)	% Retained on 1½" Screen	% Retained on ¾" Screen	% Retained on 3/8" Screen	% Retained on #4 Screen	Bottom of Test Hole

PIT LOGGING BY TEST HOLES

Test Hole No.	Depth of Stripping (Ft)	Depth of Material (Ft)	% Retained on 1½" Screen	% Retained on ¾" Screen	% Retained on 3/8" Screen	% Retained on #4 Screen	Bottom of Test Hole

RANGE 59 **TWP** 24 **SEC** SE1/4 10

COUNTY Richland MT Oct-15

PROSPECTED BY Volk/Nelson

INSPECTED & APPROVED Jeffrey Swank Oct-15