DESIGN DATA				
Traffic	Average Daily			
Current 2013	Pass: 4,395	Trucks: 1,420	Total: 5,815	
Forecast 2033	Pass: 7,210	Trucks: 2,570	Total: 9,780	
Clear Zone Distance: 34' & 42'		Design Speed: 65		
Minimum Sight Dist. for Stopping: 645'		Bridges: HL-93		
Sight Dist. for No Passing Zone: 1100'				
Pavement Design Life 20 (years)				
Design Accumulated One-way Rigid ESALs: 6,968,230, Flexible ESALs: 5,516,824				

STATE	PROJECT NO.	PCN	SECTION NO.	SHEET NO.
ND	SOIB-7-058(013)000	20416	1	1

JOB # 13
NORTH DAKOTA
DEPARTMENT OF TRANSPORTATION

SOIB-7-058(013)000

GOVERNING SPECIFICATIONS:
2014 Standard Specifications adopted by the North Dakota Department of Transportation and the Supplemental Specifications effective on the date the project is advertised.

PROJECT NUMBER \ DESCRIPTION	NET MILES	GROSS MILES
SOIB-7-058(013)000	8.938	9.184

McKenzie and Williams County
Jct ND 200 North to Jct ND 1804

Roadway Widening, Full Depth Reclamation, Concrete Paving, HMA Overlay, Turn Lanes, Culvert Extensions, HMA Shoulders, Reinforced Concrete Box Culvert Extension and Incidentals

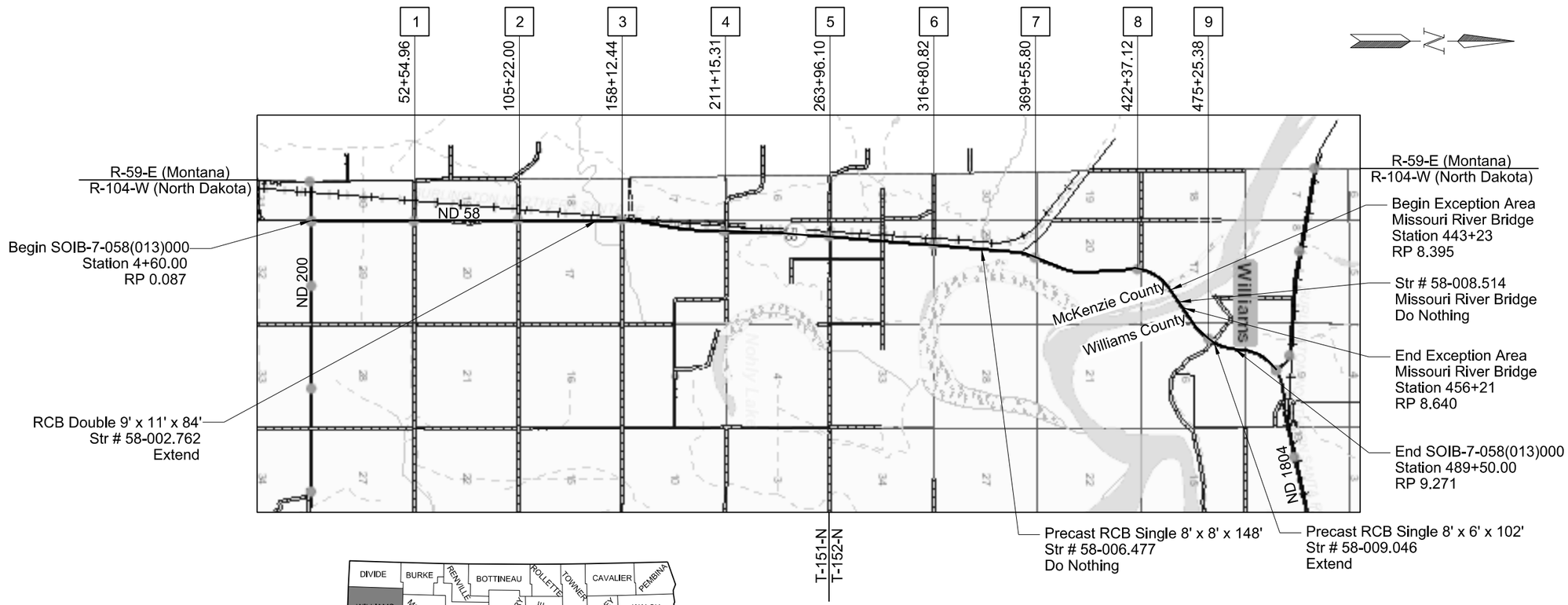

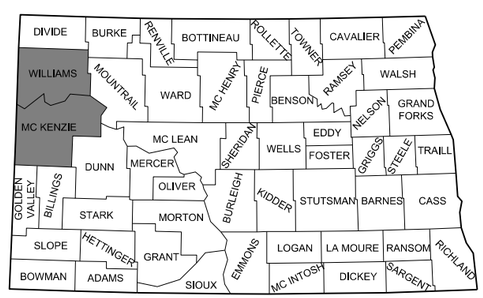

STATE COUNTY MAP

DESIGNERS

William Doerr, P.E.

John Erk, P.E.

Daniel Cichosz, P.E.

APPROVED DATE 12/8/2015

Roger Weigel /s/
OFFICE OF PROJECT DEVELOPMENT
ND DEPARTMENT OF TRANSPORTATION

I hereby certify that the attached plans were prepared by me or under my direct supervision and that I am a duly registered professional engineer under the laws of the state of ND.

APPROVED DATE 12/04/2015

William Doerr /s/
BROSZ ENGINEERING, INC.

This document was originally issued and sealed by William Doerr, Registration Number PE- 7113, on 12/04/15 and the original document is stored at the North Dakota Department of Transportation

TABLE OF CONTENTS

Section No.	Sheet No.	Description
1	1	Title Sheet
2	1	Table of Contents
2	2-3	List of Standard Drawings
4	1-2	Scope of Work
6	1-5	Notes
8	1-3	Quantities
10	1-2	Basis of Estimate
11	1-7	Earthwork Summary & Data Tables
20	1-15	General Details
30	1-6	Typical Sections
50	1-11	Manhole and Irrigation Details
51	1-5	Allowable Pipe List
60	1-23	Plan & Profile Sheets
75	1-19	Wetlands
76	1-13	Temporary Erosion Control Sheets
77	1-13	Permanent Erosion Control Sheets
81	1-3	Preliminary Survey Coordinate and Curve Data
82	1-40	Survey Data
90	1-41	Paving Layout
100	1-4	Work Zone Traffic Control
110	1-15	Signing
120	1-13	Pavement Marking
130	1-3	Guardrail
170	1-14	Box Culverts
180	1-8	Gravel Pit Plats
200	1-181	Cross Sections

LIST OF SPECIAL PROVISIONS (SP)

SP#	Description
03(14)	Temporary Erosion and Sediment Best Management Practices
04(14)	Federal Migratory Bird Treaty Act
233(14)	Stringless Grade Control
234(14)	Dowel Bar Placement
235(14)	Flexible Pavement Surface Tolerance
236(14)	Temporary Water Diversion
237(14)	Winter Suspension
258(14)	Biologist
5086(14)	Permits and Environmental Considerations

LIST OF STANDARD DRAWINGS

Standard No.	Description
D-101-1	NDDOT Abbreviations
D-101-2	NDDOT Abbreviations
D-101-3	NDDOT Abbreviations
D-101-10	NDDOT Utility Company and Organization Abbreviations
D-101-20	Line Styles
D-101-21	Line Styles
D-101-30	Symbols
D-101-31	Symbols
D-101-32	Symbols
D-203-7	Recovery Approaches at T-Intersections
D-203-8	Standard Rural Approaches
D-255-2	Erosion and Siltation Control – Erosion Control Blanket Installation
D-260-1	Erosion and Siltation Controls – Silt Fence
D-261-1	Erosion Control – Fiber Roll Placement Details
D-550-2	Longitudinal Joint Details
D-550-3	Transverse Contraction Joint Details
D-550-5	Transverse Construction Joint
D-704-1	Attenuation Device
D-704-2	Traffic Control For Coring Of Hot Bituminous Pavement
D-704-5	Contractor Sign Detail
D-704-7	Breakaway Systems For Construction Zone Signs - Perforated Tube
D-704-8	Breakaway Systems For Construction Zone Signs – U-Channel Post
D-704-9	Construction Sign Details – Terminal and Guide Signs
D-704-10	Construction Sign Details – Regulatory Signs
D-704-11	Construction Sign Details – Warning Signs
D-704-12	Shoulder Closure Tapers
D-704-13	Barricade and Channelizing Device Details
D-704-14	Construction Sign Punching and Mounting Details
D-704-15	Road Closure Layouts
D-704-16	Lane Closure on a Two Lane Road Using Traffic Control Signals
D-704-17	Sign Layout for One Lane Closure Two Lane Roadway
D--704-19	Road Closure and Lane Closure on a Two Way Road Layouts

LIST OF STANDARD DRAWINGS

Standard No.	Description
D-704-20	Terminal and Seal Coat Sign Layouts
D-704-22	Construction Truck and Temporary Detour Layouts
D-704-24	Shoulder Closures and Bridge Painting Layouts
D-704-26	Miscellaneous Sign Layouts
D-704-27	Traffic Control Plan for Moving Operations
D-704-30	Windrow Marking
D-704-50	Portable Sign Support Assembly
D-704-56	Mobile Operation - Grinding Shoulder Rumble Strips
D-706-1	Bituminous Laboratory
D-708-6	Erosion and Siltation Controls – Median or Ditch Inlet Protection
D-714-1	Reinforced Concrete Pipe Culverts & End Sections (Round Pipe)
D-714-4	Round Corrugated Steel Pipe Culverts & End Sections
D-714-22	Concrete Pipe or Precast Concrete Box Culvert Ties
D-720-1	Standard Monuments and Right of Way Markers
D-722-1A	Inlet - Catch Basin
D-722-5	Manhole Details
D-722-7	Precast Concrete Median Drain
D-754-9	Letter and Arrow Details For Variable Length Signs
D-754-19	(Conventional Use) Reference Markers
D-754-23	Perforated Tube Assembly Details
D-754-24	Mounting Details Perforated Tube
D-754-24A	Breakaway Coupler System for Perforated Tubes
D-754-25	Mounting Details Perforated Tube
D-754-26	Sign Punching, Stringer, and Support Location Details Regulatory, Warning and Guide Signs
D-754-27	Sign Punching, Stringer, and Support Location Details Regulatory, Warning and Guide Signs
D-754-29	Sign Punching, Stringer, and Support Location Details Regulatory, Warning and Guide Signs
D-754-32	Sign Punching, Stringer, and Support Location Details Regulatory, Warning and Guide Signs
D-754-40	Sign Punching, Stringer, and Support Location Details Regulatory, Warning and Guide Signs
D-754-47	Sign Punching, Stringer and Support Location Details For Variable Length Signs

LIST OF STANDARD DRAWINGS

Standard No.	Description
D-754-48	Sign Punching, Stringer and Support Location Details For Variable Length Signs
D-754-49	Sign Punching, Stringer and Support Location Details For Variable Length Signs
D-754-50	Sign Punching, Stringer and Support Location Details for Variable Length Signs
D-754-51	Sign Punching, Stringer and Support Location Details - Route Marker Signs
D-754-57	Sign Punching, Stringer and Support Location Details - Route Marker Signs
D-754-59	Sign Punching, Stringer and Support Location Details - Route Marker Signs
D-754-83	Object Markers - Culverts
D-754-86	911 Sign Support Information and Sign Details
D-754-87	Sign Punching, Stringer and Support Location Details for Street Name and 911 Signs
D-760-3	Rumble Strips Undivided Highways (Shoulders 4’ or Greater)
D-762-1	Pavement Marking Message Details
D-762-3	Pavement Marking for Standard 90 Degree Flared Intersection
D-762-4	Pavement Marking
D-762-6	Short-Term Pavement Marking
D-764-1	W-Beam Guardrail General Details
D-764-6	Flared Energy Absorbing Terminal
D-764-7	Slotted Rail Terminal
D-764-11	W-Beam Transition to in Place Concrete Safety Shape Transition
D-764-20	Short Term End Treatment For Bridges (Attenuation Device Method)
D-764-21	Short Term End Treatment For Bridges (Guardrail Method)
D-764-22	Typical Grading at Bridge Ends with W-Beam Guardrail
D-766-1	Mailbox Location Details

STATE	PROJECT NO.	SECTION NO.	SHEET NO.
ND	SOIB-7-058(013)000	4	1

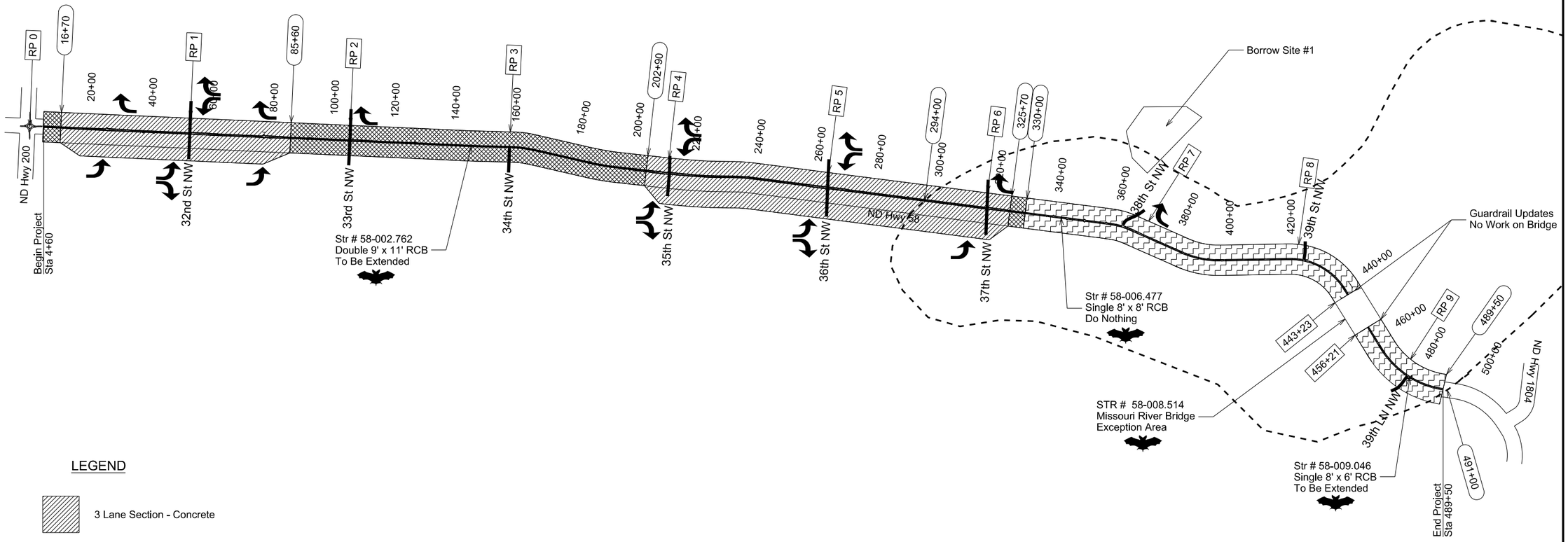

LEGEND

- 3 Lane Section - Concrete
- 2 Lane Section - Concrete
- Exception Area
- 2 Lane Section - Asphalt Overlay
- Turn Lanes
- Piping Plover Designated Critical Habitat See Environmental Commitment EC-3
- Northern Long-Eared Bat Potential Roosting Habitat See Environmental Commitment EC-7

This document was originally issued and sealed by William Doerr, Registration Number PE- 7113, on 12/04/15 and the original document is stored at the North Dakota Department of Transportation

Scope of Work

ND 58

Jct 200 to Jct 1804

STATE	PROJECT NO.	SECTION NO.	SHEET NO.
ND	SOIB-7-058(013)000	4	2

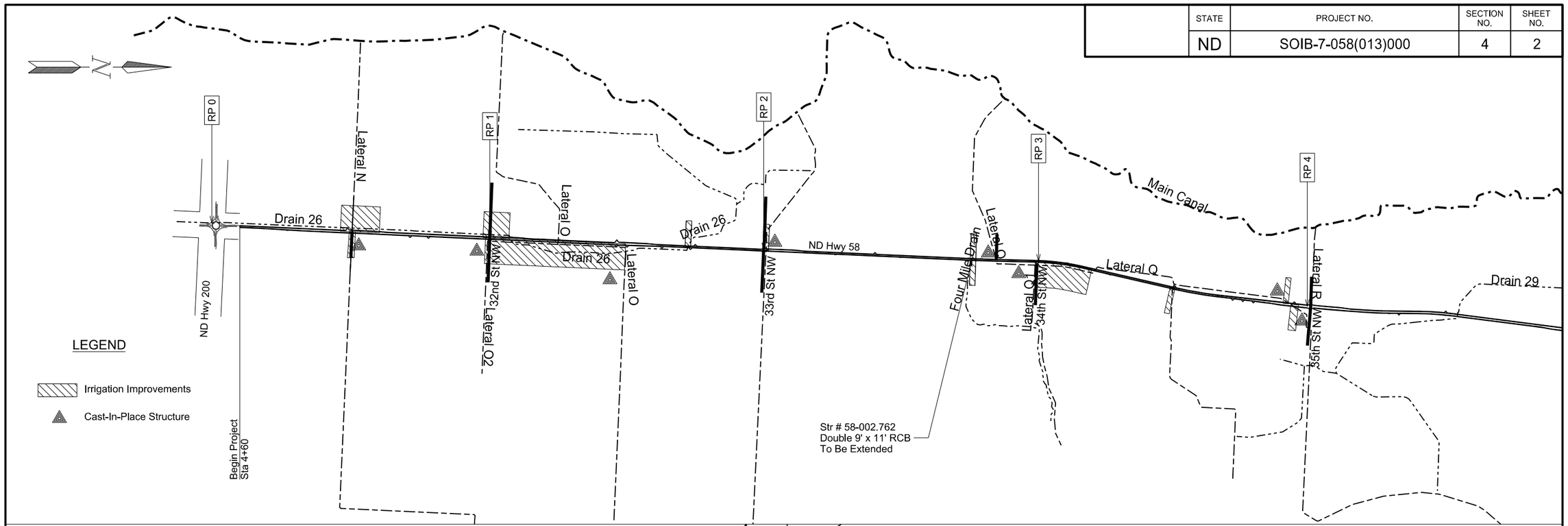

LEGEND

Irrigation Improvements

Cast-In-Place Structure

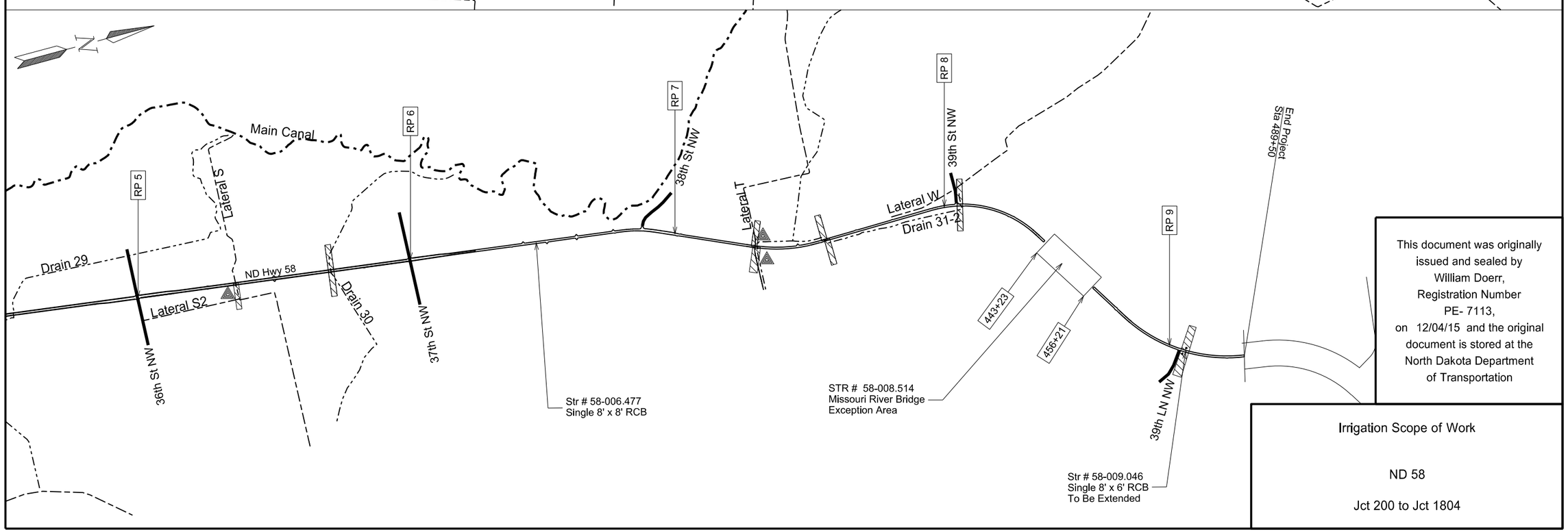

This document was originally issued and sealed by William Doerr, Registration Number PE- 7113, on 12/04/15 and the original document is stored at the North Dakota Department of Transportation

Irrigation Scope of Work

ND 58

Jct 200 to Jct 1804

PLAN NOTES

100-P01 WEEKLY PLANNING/REPORTING MEETING: Organize a weekly meeting to coordinate efforts between subcontractors, utilities, local authorities, and others.

Send a knowledgeable representative to conduct the weekly reporting/planning meeting. Prepare minutes for each meeting and make the appropriate distribution of the minutes. Have the minutes approved by the Engineer before distribution.

Provide a written schedule of the next week's work and a tentative schedule of the following week. Include a discussion of problems encountered during the current week; also include information of interest to local authorities, subcontractors, and utilities.

Provide a suitable meeting facility. Room must be approved by the Engineer.

Invite interested agencies to the meeting. Include the following agencies and any other agencies that are necessary:

A. North Dakota Department of Transportation
B. Local Government Agencies
C. Police department
D. Fire department
E. Ambulance service
F. Telephone Co.
G. Power Co.
H. Cable T.V.
I. Gas Co.
J. Railroad Co.
K. Subcontractors
L. Chamber of Commerce
M. FHWA
N. Lower Yellowstone Irrigation District

Include all costs for the Weekly Planning/Reporting Meeting including, but not limited to, providing minutes, schedules and meeting facility room in the price bid for other items.

100-P02 SUGAR BEET HARVEST / PAVING RESTRICTION: No paving will be performed on Hwy 58 during sugar beet harvest unless the Contractor receives written approval from the Sidney Valley receiving yard at Fairview, MT. Sidney Valley is a 50 acre sugar beet stacking yard located on the north end of Fairview. Typical dates for the sugar beet harvest are October 1st to October 15th. The Contractor shall contact a local representative from Sidney Valley to determine the exact harvest dates and the restrictions that may limit paving activities due to farmers hauling beets to the Fairview receiving yard.

100-P03 COORDINATION OF PROJECTS: A number of projects within the vicinity of this project will be under contract during the 2016-2017 construction seasons. One of these projects is SS-7-200(016)004 which is an overlay with widening on Hwy 200 from the Yellowstone River Bridge to Jct US 85.

100-P04 COORDINATION WITH IRRIGATION DISTRICT: This project is located within an active Irrigation District administered by the US Bureau of Reclamation and operated and maintained by the Lower Yellowstone Irrigation Project (LYIP). Irrigation operations cannot be interrupted at any time and work activities that could impact any parts of the irrigation system must be coordinated with the LYIP. See Environmental Commitment 2. Coordinate the project with the following:

James Brower
Project Manager
Lower Yellowstone Irrigation Project
2327 Lincoln Ave South East
Sidney, Montana 59270
(406) 433-1306 Office
(406) 478-4502 Cellular
(406) 433-9188 Fax
jbrower@midrivers.com

105-200 UTILITY COORDINATION: A utility coordination meeting is required.

107-710 HAUL ROADS: Before submitting a proposal, contact the appropriate State, County, Township or City officials to determine if there are any roadways that will be designated as “no haul routes”.

107-P01 RAILROAD PROTECTIVE LIABILITY INSURANCE: This project is adjacent to the BNSF Railway Company from RP 3.011 to RP 6.780. The type of work that will be performed within the railroad right of way consists of minor grading and resurfacing of intersecting roads between Highway 58 and the at-grade railroad crossing. Direct inquiries regarding protective liability insurance to:

Marsh USA Inc.
4400 Comerica Bank Tower
1717 Main Street
Dallas, TX 75201-7357, USA

Obtain information regarding crossing numbers from the Federal Railroad Administration website: http//safetydata.fra.dot.gov/Officeofsafety/

201-P01 CLEARING & GRUBBING: Remove trees from within the work limits at the following locations, as well as any additional locations not listed below but ordered by the Engineer, before March 31 or after October 1. See Environmental Commitment 8. Remove trees according to Section 201 Clearing and Grubbing. Payment for “Clearing and Grubbing” will be lump sum.

- 146+00 Left
- 198+00 Right
- 354+00 Left
- 361+00 Left & Right
- 441+00 Right
- 464+00 Right

This document was originally issued and sealed by William Doerr, Registration Number PE-7113, on 12/04/15 and the original document is stored at the North Dakota Department of Transportation

PLAN NOTES

202-P01 REMOVAL OF BITUMINOUS SURFACING: Include the cost of the full depth vertical saw cuts adjacent to pavement removal areas, specified in Section 202.04 A “General”, in the contract unit price for “Removal of Bituminous Surfacing.”

202-P02 REMOVAL OF CONCRETE: Remove and dispose of the existing concrete irrigation headwalls and end structures as specified in the plans.

202-P03 REMOVE & SLAVAGE AGGREGATE BASE: Temporary gravel surfacing is necessary to maintain traffic during construction and is shown on the cross sections. The quantity for this temporary gravel surfacing is estimated at 16,920 ton and is included in the plan quantity of salvaged base course. Upon opening the roadway back to two lanes of traffic, remove and dispose of the temporary gravel surfacing.

Include all costs associated with the removal and disposal of the temporary gravel surfacing in the price bid for “Remove & Salvage Aggregate Base.”

203-010 SHRINKAGE: 25 percent additional volume is included for shrinkage in earth embankment.

203-385 AVERAGE HAUL: No average haul has been computed for this project.

203-P01 COMMON EXCAVATION-WASTE: Temporary embankment material is necessary to maintain traffic during construction and is shown on the cross sections. The quantity for this temporary embankment material is estimated at 23,233 cubic yards and is included in the plan quantity of borrow excavation. Upon opening the roadway back to two lanes of traffic, remove and dispose of the temporary embankment material.

Include all costs associated with the removal and disposal of the temporary embankment material in the price bid for “Common Excavation-Waste.” Plan quantity will be used as the measurement for payment of “Common Excavation-Waste.”

203-P02 COMMON EXCAVATION-TYPE A: Determine the optimum moisture and density, as specified in ND T 180, for each type of material encountered that requires compaction control. Perform a multi-point test using a minimum of 4 points. Submit the results to the Engineer along with a split sample of each material.

The Engineer will perform comparison tests using the same procedure on the split sample. The Engineer’s results will be used for determining in place density of material.

302-P01 TRIMMING BLENDED BASE: Use Surface Tolerance Type B for the blended base. Incorporate excess material removed by the trimming operation from the high points into the low points or into the salvaged base course. The cost for providing the required grade and cross section shall be included in the unit price bid for "Full Depth Reclamation."

430-P01 LONGITUDINAL JOINTS: For the top lift of HBP, paving seams are not allowed in the wheel path of the 12’ driving lanes.

550-P01 LEAVE OUTS: A leave out will consist of only paving half of a crossroad intersection and allowing through traffic on the portion left out. The leave out will not be paved until the concrete overlay has attained a flexural strength of 450 psi or a compressive strength of 3,000 psi. The leave out locations are identified in the plans. Include all costs for this work in the unit price bid for "8.5 IN Non-Reinf Concrete Pvmt CL AE-Doweled."

550-P02 CORRECTIVE ACTION: The Engineer will collect a second profile a maximum of 5 working days after the completion of corrective action. If additional corrective action is necessary, the Engineer will apply a liquidated damage of $1,500 per trip for each profile collected after the second profile.

704-100 TRAFFIC CONTROL SUPERVISOR: Provide a Traffic Control Supervisor.

704-255 TRAFFIC CONTROL FOR SHOULDER DROP-OFF: If the shoulder and adjacent driving lane are not even at the end of the day, the following criteria will apply:

Place the following sign assembly at the locations listed below.

Sign Assembly: Sign No. W8-9a-48 “Shoulder Drop Off” and supplemental plate Sign No. W20-52-54 to identify the distance.

Locations:

- In advance of the drop off;
- Spaced at each mile from the advance sign; and
- At major intersections (CMC routes, state and US Highways, and Interstate Ramps).

If the difference in elevation between the shoulder and the driving lane is 2” or greater, construct a slough on the driving lane that is 4:1 or flatter.

If the difference in elevation between the shoulder and driving lane is less than 2”, no slough is required.

Sign assemblies will be measured and paid for according to Section 704 “Temporary Traffic Control”.

This document was originally issued and sealed by William Doerr, Registration Number PE-7113, on 12/04/15 and the original document is stored at the North Dakota Department of Transportation

PLAN NOTES

704-P01 TRAFFIC CONTROL FOR BITUMINOUS PAVING AND WIDENING: Provide traffic control consisting of a temporary road closure, flagging and a pilot car.

Traffic control device quantities are based on the list below. Provide additional devices at no additional cost to the Department.

1. Standard D-704-12;
2. Standard D-704-15, layout A;
3. Standard D-704-20, layout G;
4. Standard D-704-22, layouts K and L;
5. Standard D-704-24, layout R; and
6. Standard D-704-26, layouts CC, EE, and GG.

When installing layout G from Standard D-704-20, move sign W-3-5-48 and the sign assembly containing signs R2-1-48 and R2-1a-24 with the work area as it progresses through the construction zone. Place the R2-1-48 assembly a minimum of 500 feet in advance of flagging signs.

Place flaggers and traffic control devices as shown on Standard D-704-15, layout A at the following intersections when the lane closure spans across them:

1. 38th Street NW
2. 39th Street NW
3. 39th Lane NW

704-P02 TRAFFIC CONTROL PHASING FOR CONCRETE PAVING AND WIDENING: Complete each phase in order as shown in Section 100 Sheets 3 & 4, “Work Zone Traffic Control” and as follows:

Phase 1: Maintain traffic on existing roadway surface. Following standard drawing D-704-24 Layout Type U reducing speeds to 40 MPH. Use stackable vertical panels in lieu of tubular markers throughout Phase 1 at 80’ spacing. Construct embankment, culverts and ditches to the proposed grade and place salvage base course level with the existing asphalt surface on both sides of the highway through station 330+00.

Phase 2a: Move northbound traffic to the widened shoulder constructed in Phase 1 and southbound traffic to the existing northbound lane with speeds reduced to 25 MPH. Place stackable vertical panels at the outside edge of each lane of traffic and place tubular markers between the two lanes of traffic, all at 50’ spacing. Perform the mine & blend operation on the left hand side and the first 6’ of the right hand side of the highway through station 330+00.

Phase 2b: Move the northbound and southbound traffic to the blended base surface constructed in Phase 2a with speeds remaining at 25 MPH. Place stackable vertical panels at the outside edge of each lane of traffic and place tubular markers between the two lanes of traffic, all at 50’ spacing. Perform the mine & blend operation on the remainder of the right hand side of the highway through station 330+00.

Phase 3: Move the northbound and southbound traffic back to the right hand side of the highway as in Phase 2a with speeds remaining at 25 MPH. Place stackable vertical panels at the outside edge of each lane of traffic and place tubular markers between the two lanes of traffic, all at 50’ spacing. Pave the concrete pavement for the southbound driving lane and turn lanes. Install salvage base course for shoulder surfacing.

Phase 4: Maintain northbound traffic as in Phase 3. Move southbound traffic to the far left side of the highway. Maintain speeds at 25 MPH. Place stackable vertical panels at the outside edge of each lane of traffic at 50’ spacing. Pave the concrete pavement for the northbound driving lane in the two-lane sections and the center lane in the three-lane sections.

Phase 5: Maintain southbound traffic as in Phase 4. Move northbound traffic to be adjacent to the southbound traffic. Maintain speeds at 25 MPH. Place stackable vertical panels at the outside edge of each lane of traffic and place tubular markers between the two lanes of traffic, all at 50’ spacing. Pave the concrete pavement for the northbound driving lane and turn lanes in the three-lane sections.

Phase 6: Move northbound and southbound traffic to the center of the concrete pavement. Maintain speeds at 25 MPH. Place stackable vertical panels at the outside edge of each lane of traffic and place tubular markers between the two lanes of traffic, all at 50’ spacing. Pave the asphalt shoulders on both sides of the highway.

704-P03 TRAFFIC CONTROL FOR CENTERLINE RUMBLE STRIP INSTALLATION: Provide traffic control as described below:

Two sets of signs for D-704-15, layout Type A is a minimum. The work zone shall be limited to 3 miles in length. However, the signs for the next 3 mile work zone shall be set ahead of the current work zone in the direction the operation is moving. Once to that point, the original set of signs is removed and reset ahead in the next 3 miles. This traffic control requires a minimum of 2 flaggers working at all times. Signs cannot be moved by the flaggers.

704-P04 WINTER TRAFFIC CONTROL: Traffic control is required for irrigation system work to be completed during the winter suspension from 11/1/16 to 4/15/16. No portion of any driving lane shall be closed during this time and remove all traffic control devices from the roadway at the end of each working day.

This document was originally issued and sealed by William Doerr, Registration Number PE-7113, on 12/04/15 and the original document is stored at the North Dakota Department of Transportation

PLAN NOTES

706-P01 FIELD OFFICE: Provide a field office which meets the following requirements:

1. Minimum total area of 450 square feet
2. Indoor bathroom facilities and supplies with weekly cleaning services
3. Hookups for heat, electricity, sewer and potable water.
4. Minimum cabinet space of 32 cubic feet
5. Minimum counter space of 40 square feet
6. Air conditioner with a minimum of 20,000 BTUs
7. Lighting with a minimum of 110 foot-candles
8. Supply a photocopier with enough toner to last the length of the project and with the following capabilities:
   a. Printing;
   b. Scanning; and
   c. Producing 11 x 17 photocopies and prints.

Place the field office on the project, or as close to the project as possible. The Contractor is responsible for the pay for the following:
- Rental fees;
- Heating;
- Electrical;
- Sewer; and
- Potable water.

Make the field office available for occupancy one week before the start of the project. The Engineer will approve the location and the condition of the office. Do not remove the field office until the Engineer releases the field office.

The Engineer is responsible for the following items:
- Furnishing office equipment;
- Supplying paper; and
- Supplying and paying for internet service.

All requirements of the Field Office are subject to approval by the Engineer. Include the costs for the field office in the bid item "Field Office".

Schedule for Payments:
- 25% when set up on site.
- 50% when 30% of the work is complete.
- 75% when 60% of the work is complete.
- 100% when project is complete.

714-P01 PIPE BENDS: Where sections of pipe requires bends, install individual prefabricated pipe bend sections that have a maximum deflection of 1.5 degrees.

714-P02 SILTED PIPES: Clear any debris and/or silt from within all pipe that are extended or requiring new end sections. When not within delineated wetland, the silt shall also be removed from the adjacent channel within the right of way up to 15 feet beyond the end of the pipe. The cost of removal and disposal of silt or debris shall be included in the price bid for centerline and approach pipe bid items.

714-P03 RELAYING END SECTIONS: Relayed concrete end sections shall be tied to the new pipe as shown on Standard D-714-22. Include the cost of drilling the required holes and furnishing and installing the tie bolts in the contract unit price bid for “Remove & Relay End Section – All Types & Sizes”.

714-P04 PIPE CONDUIT 18IN: Remove the pipe installed from Station 158+11 to 168+81 when the temporary widening is removed.

Include the cost of removing the pipe in the contract unit price of “Pipe Conduit 18 In.”

722-100 INLETS AND MANHOLES: Inlets and manholes were designed with a minimum 4 foot riser height. Fill the bottom of each drainage structure with concrete, up to the lowest invert elevation.

762-050 PAVEMENT MARKING: If the Engineer and Contractor agree, plan quantity will be used as the measurement for payment for pavement marking items.

910-P01 SLUICE GATE: Install 18” and 42” sluice gates in the irrigation structure located at Station 76+29 to control the flow through the 18” and 42” diameter outfall pipe. Install the sluice gates in accordance with the manufacturer’s recommendations.

Furnish a Waterman manufactured C-10 canal gate. Design the gate to be mounted inside the concrete structure in front of a flush pipe. Submit Work Drawings to the Engineer showing the installation details.

The floor of the structure has been set below the flow line to allow for the proper installation of the sluice gate.

Include the cost of materials, equipment and labor required to furnish and install the sluice gates in the contract unit price of the appropriate Sluice Gate bid item.

920-P01 ARCHEOLOGIST: See Environmental Notes EC-07 for requirements.

This document was originally issued and sealed by William Doerr, Registration Number PE-7113, on 12/04/15 and the original document is stored at the North Dakota Department of Transportation

ENVIRONMENTAL NOTES

EC-01 LOWER YELLOWSTONE IRRIGATION PROJECT: The project is located within the Lower Yellowstone Irrigation Project. The Lower Yellowstone Irrigation Project is owned by the U.S. Bureau of Reclamation and is managed by the Lower Yellowstone Irrigation District. This fully-functioning irrigation system runs parallel to and crosses beneath the project at numerous locations.

No construction activities within the irrigation system will take place during the irrigation season from April 15 to October 1. The timing of all culvert installation, temporary or permanent, during the project implementation shall be coordinated with James Brower, Manager, Lower Yellowstone Irrigation District, Sidney, MT so that any irrigation project operations are not interrupted. Mr. Brower can be reached at (406)433-1306.

EC-02 WHOOPING CRANE: The project is located within the migration corridor of the endangered whooping crane, and suitable stopover habitat for the whooping crane is present. The migration periods of the whooping crane are April 1st to May 15th and September 10 to October 31.

Cease all construction activities and notify the Engineer immediately in the event a whooping crane is identified within one mile of the project location. The Engineer will then coordinate with the USFWS, FHWA and NDDOT. Do not resume work within the avoidance area until the Engineer has confirmed that the bird has left the area.

Above ground utility conflicts are not foreseen with this project but if any impacts are required, the Contractor shall contact the NDDOT Utility Engineer to coordinate with the utility company. Bird diverters will be installed by the utility company on overhead utility lines that are shifted due to the proposed action.

EC-03 AQUATIC NUISANCE SPECIES: The Contractor shall prevent the introduction of Aquatic Nuisance Species (ANS) into North Dakota waters, or transport of aquatic vegetation to or from any waters of the state, or transport of any aquatic vegetation into the state.

The Contractor shall follow the North Dakota Game and Fish Department's (NDGFD) Administrative Rules 30-3-06 for compliance with ND Century Code Chapter 20.1-17 on ANS. Contractor shall notify the NDGFD at least 72 hours prior to the placement IN or ON the waters of the State of North Dakota of any and all vehicles, vessels, pumps and equipment that will be used in the project, to allow the NDGFD sufficient time to inspect any and all such equipment for ANS. The NDGFD ANS Coordinator, Fred Ryckman, shall be contacted by phone (701-770-0920) or e-mail fryckman@nd.gov for equipment inspections, or any additional information regarding ANS prevention protocol.

EC-04 FORT BUFORD STATE HISTORIC SITE: The south entrance into the Fort Bufford Historic Site is located within the project area (Station 477+80 Right, 39th Lane NW).

The Contractor shall provide continuous access for the traveling public to use the south entrance into the Fort Bufford Historic Site.

EC-05 NORTHERN LONG-EARED BAT: The project contains structures that are potential roosting habitat of the Northern long-eared bat.

For the work at Structure # 58-002.762 and # 58-009.046, the box culvert will only be lengthened on one end at a time and these construction activities will be limited to 30 minutes after sunrise to 30 minutes before sunset.

EC-06 NORTHERN LONG-EARED BAT: The project contains trees that are potential roosting habitat of the Northern long-eared bat.

Tree removals will only occur during October 1 to March 31, outside of the summer maternity season of the bat (April 1 to September 30).

EC-07 ARCHEOLOGIST: Hire an archeologist to monitor historic site 32WI25 while any construction activities are being performed around the Fort Bufford Historic Site to ensure no archaeology associated with Fort Bufford Historic Site is impacted by construction activities and any discoveries are addressed appropriately. The archeologist must be permitted by the State Historic Preservation Office and will be required to have a tribal monitor present during monitoring. Include all costs for a qualified archeologist and tribal monitor in the unit price bid for "Archeologist".

This document was originally issued and sealed by William Doerr, Registration Number PE-7113, on 12/10/15 and the original document is stored at the North Dakota Department of Transportation

STATE	PROJECT NO.	SECTION	SHEET
ND	SOIB-7-058(013)000	8	1

ESTIMATE OF QUANTITIES

SPEC	CODE	ITEM DESCRIPTION	UNIT	MAINLINE	TOTAL
103	0100	CONTRACT BOND	L SUM	1	1
103	0200	ESCROW OF BID DOCUMENTATION	L SUM	1	1
201	0330	CLEARING & GRUBBING	L SUM	1	1
202	0112	REMOVAL OF CONCRETE	SY	147	147
202	0115	REMOVAL OF CONCRETE-SITE 1	L SUM	1	1
202	0116	REMOVAL OF CONCRETE-SITE 2	L SUM	1	1
202	0123	REMOVE & SALVAGE AGGREGATE BASE	TON	16,920	16,920
202	0135	REMOVAL OF BITUMINOUS SURFACING	TON	4,783	4,783
202	0169	REMOVAL OF END SECTION-ALL TYPES & SIZES	EA	29	29
202	0174	REMOVAL OF PIPE ALL TYPES AND SIZES	LF	3,710	3,710
203	0101	COMMON EXCAVATION-TYPE A	CY	27,840	27,840
203	0108	TOPSOIL-BORROW AREA	CY	15,833	15,833
203	0109	TOPSOIL	CY	60,912	60,912
203	0121	TOPSOIL-WETLAND	CY	782	782
203	0113	COMMON EXCAVATION-WASTE	CY	23,233	23,233
203	0140	BORROW-EXCAVATION	CY	158,326	158,326
210	0051	BOX CULVERT EXCAVATION - SITE 1	EA	1	1
210	0052	BOX CULVERT EXCAVATION - SITE 2	EA	1	1
210	0202	FOUNDATION PREPARATION-SITE 1	L SUM	1	1
210	0203	FOUNDATION PREPARATION-SITE 2	L SUM	1	1
210	0210	FOUNDATION FILL	CY	183	183
216	0100	WATER	M GAL	4,947	4,947
220	0100	PREPARE STOCKPILE SITE	L SUM	1	1
220	0200	RESTORE STOCKPILE SITE	L SUM	1	1
251	0200	SEEDING CLASS II	ACRE	115	115
251	1000	WETLAND SEED	ACRE	5	5
251	2000	TEMPORARY COVER CROP	ACRE	120	120
253	0101	STRAW MULCH	ACRE	240	240
255	0103	ECB TYPE 3	SY	461	461
256	0200	RIPRAP GRADE II	CY	260	260
260	0200	SILT FENCE SUPPORTED	LF	2,940	2,940
260	0201	REMOVE SILT FENCE SUPPORTED	LF	2,940	2,940
261	0112	FIBER ROLLS 12IN	LF	95,855	95,855
261	0113	REMOVE FIBER ROLLS 12IN	LF	49,490	49,490
262	0100	FLOTATION SILT CURTAIN	LF	80	80
262	0101	REMOVE FLOTATION SILT CURTAIN	LF	80	80
302	0100	SALVAGED BASE COURSE	TON	116,545	116,545
302	0316	TRAFFIC SERVICE GRAVEL	CY	200	200
306	0510	FULL DEPTH RECLAMATION	SY	141,782	141,782
401	0050	TACK COAT	GAL	9,477	9,477
401	0060	PRIME COAT	GAL	18,082	18,082
401	0160	BLOTTER MATERIAL CL44	TON	545	545
411	0105	MILLING PAVEMENT SURFACE	SY	1,200	1,200
430	0045	SUPERPAVE FAA 45	TON	28,972	28,972
430	5828	PG 58-28 ASPHALT CEMENT	TON	1,276	1,276
430	6434	PG 64-34 ASPHALT CEMENT	TON	442	442
430	1000	CORED SAMPLE	EA	88	88
550	0302	8.5IN NON-REINF CONCRETE PVMT CL AE-DOWELED	SY	123,723	123,723
602	0130	CLASS AAE-3 CONCRETE	CY	79.8	79.8
602	1131	CLASS AE-3 CONCRETE-BOX CULVERT	CY	144.6	144.6

STATE	PROJECT NO.	SECTION	SHEET
ND	SOIB-7-058(013)000	8	2

ESTIMATE OF QUANTITIES

SPEC	CODE	ITEM DESCRIPTION	UNIT	MAINLINE	TOTAL
606	0806	8FT X 6FT PRECAST RCB CULVERT	LF	46	46
606	4806	8FT X 6FT PRECAST RCB END SECTION	EA	2	2
612	0114	REINFORCING STEEL-GRADE 60-BOX CULVERT	LBS	20,117.0	20,117.0
612	0115	REINFORCING STEEL-GRADE 60	LBS	11,933.0	11,933.0
702	0100	MOBILIZATION	L SUM	1	1
704	0100	FLAGGING	MHR	5,000	5,000
704	1000	TRAFFIC CONTROL SIGNS	UNIT	3,570	3,570
704	1052	TYPE III BARRICADE	EA	100	100
704	1060	DELINEATOR DRUMS	EA	200	200
704	1067	TUBULAR MARKERS	EA	650	650
704	1080	STACKABLE VERTICAL PANELS	EA	2,600	2,600
704	1081	VERTICAL PANELS-BACK TO BACK	EA	50	50
704	1185	PILOT CAR	HR	2,000	2,000
706	0400	FIELD OFFICE	EA	1	1
706	0500	AGGREGATE LABORATORY	EA	1	1
706	0550	BITUMINOUS LABORATORY	EA	1	1
706	0600	CONTRACTOR'S LABORATORY	EA	2	2
709	0155	GEOSYNTHETIC MATERIAL TYPE RR	SY	552	552
714	0310	PIPE CONC REINF 18IN CL III	LF	14	14
714	0615	PIPE CONC REINF 24IN CL III	LF	172	172
714	0820	PIPE CONC REINF 30IN CL III	LF	2,603	2,603
714	0905	PIPE CONC REINF 36IN CL III	LF	24	24
714	1005	PIPE CONC REINF 42IN CL III	LF	1,328	1,328
714	1105	PIPE CONC REINF 48IN CL III	LF	138	138
714	1310	PIPE CONC REINF 60IN CL III	LF	72	72
714	1510	PIPE CONC REINF 72IN CL III	LF	30	30
714	2165	PIPE CONC REINF ARCH 65IN X 40IN CL III	LF	827	827
714	3023	END SECT-TRAVERSABLE REINF CONC 24IN	EA	21	21
714	3033	END SECT-TRAVERSABLE REINF CONC 30IN	EA	2	2
714	3036	END SECT-TRAVERSABLE REINF CONC 36IN	EA	3	3
714	4100	PIPE CONDUIT 18IN	LF	1,100	1,100
714	4106	PIPE CONDUIT 24IN-APPROACH	LF	3,098	3,098
714	4113	PIPE CONDUIT 30IN-APPROACH	LF	126	126
714	4116	PIPE CONDUIT 36IN-APPROACH	LF	118	118
714	9660	REMOVE AND RELAY END SECTION-ALL TYPES & SIZES	EA	18	18
720	0110	RIGHT OF WAY MARKERS	EA	246	246
720	0125	ALIGNMENT MONUMENTS	EA	52	52
720	0130	IRON PIN R/W MONUMENTS	EA	188	188
720	0135	IRON PIN REFERENCE MONUMENTS	EA	58	58
722	0120	MANHOLE 72IN	EA	4	4
722	1120	MANHOLE RISER 72IN	LF	29	29
722	4565	MEDIAN DRAIN PRECAST CONCRETE-TYPE A	EA	2	2
754	0112	FLAT SHEET FOR SIGNS-TYPE IV REFL SHEETING	SF	29.8	29.8
754	0115	FLAT SHEET FOR SIGNS-TYPE XI REFL SHEETING	SF	119.8	119.8
754	0206	STEEL GALV POSTS-TELESCOPING PERFORATED TUBE	LF	737.9	737.9

STATE	PROJECT NO.	SECTION	SHEET
ND	SOIB-7-058(013)000	8	3

ESTIMATE OF QUANTITIES

SPEC	CODE	ITEM DESCRIPTION	UNIT	MAINLINE	TOTAL
754	0561	REFERENCE MARKER-TYPE A	EA	9	9
754	0592	RESET SIGN PANEL	EA	22	22
754	0805	OBJECT MARKERS - CULVERTS	EA	184	184
760	0001	RUMBLE STRIPS - CONCRETE SHOULDER	MILE	7.3	7.3
760	0003	RUMBLE STRIPS - CONCRETE CENTERLINE	MILE	2.6	2.6
760	0005	RUMBLE STRIPS - ASPHALT SHOULDER	MILE	17.9	17.9
760	0007	RUMBLE STRIPS - ASPHALT CENTERLINE	MILE	2.8	2.8
762	0112	EPOXY PVMT MK MESSAGE	SF	48	48
762	0113	EPOXY PVMT MK 4IN LINE	LF	52,799	52,799
762	0115	EPOXY PVMT MK 8IN LINE	LF	530	530
762	0117	EPOXY PVMT MK 24IN LINE	LF	23	23
762	0122	PREFORMED PATTERNED PVMT MK-MESSAGE(GROOVED)	SF	864	864
762	0430	SHORT TERM 4IN LINE-TYPE NR	LF	119,975	119,975
762	1305	PREFORMED PATTERNED PVMT MK 4IN LINE-GROOVED	LF	154,699	154,699
762	1309	PREFORMED PATTERNED PVMT MK 8IN LINE-GROOVED	LF	11,500	11,500
762	1325	PREFORMED PATTERNED PVMT MK 24IN LINE-GROOVED	LF	222	222
764	0131	W-BEAM GUARDRAIL	LF	395	395
764	0145	W-BEAM GUARDRAIL END TERMINAL	EA	4	4
764	0150	REMOVE & RESET GUARDRAIL	LF	300	300
764	0151	REMOVE W-BEAM GUARDRAIL & POSTS	LF	508	508
764	2081	REMOVE END TREATMENT & TRANSITION	EA	4	4
766	0100	MAILBOX - ALL TYPES	EA	11	11
900	1000	TEMPORARY STREAM DIVERSION	EA	2	2
910	0696	SLUICE GATE 18IN	EA	1	1
910	0702	SLUICE GATE 42IN	EA	1	1
920	1240	ARCHEOLOGIST	L SUM	1	1
920	1241	BIOLOGIST	L SUM	1	1

STATE	PROJECT NO.	SECTION NO.	SHEET NO.
ND	SOIB-7-058(013)000	10	1

Removals
Removal of Bituminous Surfacing (includes bituminous surfacing and base) @ 1.9 Ton/CY
Removal of Aggregate @ 1.5 Ton/CY

Surfacing
Salvaged Base Course @ 1.875 Ton/CY
Prime Coat @ 0.25 Gal/SY
Tack Coat @ 0.05 Gal/SY
Superpave FAA 45 @ 2.0 Ton/CY
PG 58-28 Asphalt Cement @ 5.9% (Bottom 3.5" Lifts, Shoulders & Approaches)
PG 64-34 Asphalt Cement @ 5.9% (Top 2" Lift)
Blotter Material CL 44 @ 15 Lbs/SY

Water
25 MGal/Mile for Dust Palliative
20 Gal/Ton for Aggregates
10 Gal/CY for Embankment

			36' Finished Top 2 Lane Concrete Section 24' of 8.5" Doweled PCC 6' Asphalt Shoulders Transition Location			36' Finished Top 2 Lane Concrete Section 24' of 8.5" Doweled PCC 6' Asphalt Shoulders			48' Finished Top 3 Lane Concrete Section 36' of 8.5" Doweled PCC 6' Asphalt Shoulders			60' Finished Top 3 Lane Concrete Section SB Right Turn Lane 48' of 8.5" Doweled PCC 6' Asphalt Shoulders			48' Finished Top 2 Lane Concrete Section SB Right Turn Lane 36' of 8.5" Doweled PCC 6' Asphalt Shoulders			60' Finished Top 3 Lane Concrete Section NB Right Turn Lane 48' of 8.5" Doweled PCC 6' Asphalt Shoulders			36' Finished Top 2 Lane Asphalt Section 36' of 5.5" Asphalt			48' Finished Top 2 Lane Asphalt Section SB Right Turn Lane 48' of 5.5" Asphalt				
			Begin Station*	End Station*		Begin Station*	End Station*		Begin Station*	End Station*		Begin Station*	End Station*		Begin Station*	End Station*		Begin Station*	End Station*		Begin Station*	End Station*		Begin Station*	End Station*			
			4+60	11+00		11+00	12+84		12+84	25+36		25+36	32+08		105+67	112+38		200+67	211+84		330+00	362+43		362+43	369+63			
						83+99	105+67		32+08	52+84		52+84	59+55		317+26	323+98		257+67	264+39		369+32	443+23						
						112+38	200+67		59+55	77+27		77+27	83+99								456+21	487+00						
						323+98	330+00		218+51	257+67		211+84	218+51															
									270+97	317+26		264+39	270+97															
MAINLINE SURFACING QUANTITIES			**Total Stations =**	**6.40**		**Total Stations =**	**117.83**		**Total Stations =**	**136.45**		**Total Stations =**	**33.40**		**Total Stations =**	**13.43**		**Total Stations =**	**17.89**		**Total Stations =**	**137.13**		**Total Stations =**	**7.20**			
Material		**Unit**	**Width (ft)**	**Quantity per Station**	**Sub-Total**	**Width (ft)**	**Quantity per Station**	**Sub-Total**	**Width (ft)**	**Quantity per Station**	**Sub-Total**	**Width (ft)**	**Quantity per Station**	**Sub-Total**	**Width (ft)**	**Quantity per Station**	**Sub-Total**	**Width (ft)**	**Quantity per Station**	**Sub-Total**	**Width (ft)**	**Quantity per Station**	**Sub-Total**	**Width (ft)**	**Quantity per Station**	**Sub-Total**	**Total**	**Unit**
302-0100	Salvaged Base Course (1.875 Ton/CY)	Ton	-	415.14	2,657	-	226.88	26,734	-	201.81	27,537	-	312.92	10,452	-	201.81	2,711	-	312.92	5,599	-	116.39	15,961	-	189.31	1,364	**93,015**	**Ton**
306-0510	Full Depth Reclamation	SY	-	-	-	40	444.45	52,370	40	444.45	60,646	40	444.45	14,845	40	444.45	5,969	40	444.45	7,952	-	-	-	-	-	-	**141,782**	**SY**
401-0050	Tack Coat (0.05 Gal/SY) (after 1st Lift)	Gal	14	7.78	50	14	7.78	917	14	7.78	1,062	14	7.78	260	14	7.78	105	14	7.78	140	41	22.78	3,124	53	29.45	213	**9,129**	**Gal**
401-0050	Tack Coat (0.05 Gal/SY) (after 2nd Lift)	Gal	-	-	-	-	-	-	-	-	-	-	-	-	-	-	-	-	-	-	40	22.23	3,049	52	28.89	209		
401-0060	Prime Coat (0.25 Gal/SY)	Gal	20	55.56	356	20	55.56	6,547	20	55.56	7,582	20	55.56	1,856	20	55.56	747	20	55.56	994	-	50.00	6,857	-	83.34	601	**18,082**	**Gal**
401-0160	Blotter Material CL 44 (15 Lbs/SY)	Ton	20	1.67	11	20	1.67	197	20	1.67	228	20	1.67	56	20	1.67	23	20	1.67	30	-	1.50	206	-	2.50	18	**545**	**Ton**
430-0045	Superpave FAA 45 (2 Ton/CY)	Ton	12	33.19	213	12	33.19	3,911	12	33.19	4,529	12	33.19	1,109	12	33.19	446	12	33.19	594	36	114.67	15,725	48	155.41	1,119	**27,646**	**Ton**
430-5828	PG 58-28 Asphalt Cement (5.9%)**	Ton	12	1.96	13	12	1.96	231	12	1.96	268	12	1.96	66	12	1.96	27	12	1.96	36	36	4.31	592	48	5.84	43	**1,276**	**Ton**
430-6434	PG 64-34 Asphalt Cement (5.9%)**	Ton	-	-	-	-	-	-	-	-	-	-	-	-	-	-	-	-	-	-	36	2.47	339	48	3.34	25	**364**	**Ton**
550-0302	8.5IN Non-Reinf Concrete Pvmt CL AE-Doweled	SY	24	266.67	1,707	24	266.67	31,422	36	400.00	54,580	48	533.34	17,814	36	400.00	5,372	48	533.34	9,542	-	-	-	-	-	-	**120,437**	**SY**

* For ease of calculations, the station ranges are split in middle of the transition between each section. Construct transitions per Section 90.
** In the Concrete Section, the Asphalt Shoulders will use PG 58-28 oil. In the Asphalt Section, paving will consist of 3 lifts; 1.5" thick bottom lift using PG 58-28 oil, 2" thick second lift using PG 58-28 oil, 2" thick top lift using PG 64-34 oil.

RUMBLE STRIPS						
Type	Begin Station	End Station	Length (Miles)	No. of Sides	Total Quantity	
Asphalt Outside Shoulder	4+60	443+23	8.31	2	16.62	
Asphalt Outside Shoulder	456+21	489+50	0.64	2	1.28	
Asphalt Outside Shoulder Total					**17.9**	**MILE**
Type	Begin Station	End Station	Length (Miles)	No. of Sides	Total Quantity	
Asphalt Centerline	330+00	443+23	2.15	1	2.15	
Asphalt Centerline	456+21	489+50	0.64	1	0.64	
Asphalt Centerline Total					**2.8**	**MILE**
Type	Begin Station	End Station	Length (Miles)	No. of Sides	Total Quantity	
Concrete Centerline	4+60	16+70	0.23	1	0.23	
Concrete Centerline	85+60	202+90	2.23	1	2.23	
Concrete Centerline	325+70	330+00	0.09	1	0.09	
Concrete Centerline Total					**2.6**	**MILE**
Type	Begin Station	End Station	Length (Miles)	No. of Sides	Total Quantity	
Concrete Inside Shoulder	16+70	85+60	1.31	2	2.62	
Concrete Inside Shoulder	202+90	325+70	2.33	2	4.66	
Concrete Inside Shoulder Total					**7.3**	**MILE**

See Section 20, Sheets 8 & 9 and D-760-3 for specific installation information.

CORED SAMPLES							
	A	B	C	D			
Location	Distance (Ft) ÷ 2000	Lanes	Lifts	Sublots (A x B x C)	Quantity (D x 2)	Quantity (1 per mile)	Unit
430.04 I.2.b(1), "General" 330+00 to 443+23, 456+21 to 489+50	7	2	3	44	88	N/A	EA
430.04 I.2.b(2), "Pavement Thickness Determination Cores"					N/A	0	EA
				Total	**88**	**0**	**EA**

MAILBOXES			
Station		Type	Action
37+59	Rt	Double	Replace
85+85	Lt	9 Boxes	Replace
92+24	Lt	Single	Replace
127+00	Rt	Single	Replace
197+07	Rt	Single	Replace
200+95	Rt	Double	Replace
316+97	Rt	Double	Replace
337+35	Rt	Single	Replace
344+10	Rt	Single	Replace
349+65	Rt	Single	Replace
392+31	Rt	Single	Replace
Total		**11**	**EA**

This document was originally issued and sealed by William Doerr, Registration Number PE- 7113, on 12/04/15 and the original document is stored at the North Dakota Department of Transportation

Basis of Estimate

ND 58

Jct 200 to Jct 1804

STATE	PROJECT NO.	SECTION NO.	SHEET NO.
ND	SOIB-7-058(013)000	10	2

OBJECT MARKERS - CULVERTS

Location	Quantity (EA)	Location	Quantity (EA)
13+81 - Rt (Bk & Ahd)	2	208+65 - Lt (Bk & Ahd)	2
24+31 - CL (Lt & Rt)	2	219+40 - CL (Lt & Rt)	2
24+20 - Lt (Bk)	1	228+90 - Rt (Bk & Ahd)	2
26+25 - CL (Lt & Rt)	2	237+90 - Rt (Bk & Ahd)	2
26+81 - CL (Lt & Rt)	2	237+90 - Lt (Bk & Ahd)	2
31+48 - Lt (Ahd)	1	240+21 - CL (Lt & Rt)	2
37+45 - Rt (Bk & Ahd)	2	248+73 - CL (Lt & Rt)	2
49+52 - CL (Lt & Rt)	2	264+31 - Rt (Bk & Ahd)	2
51+70 - Lt (Bk)	1	264+31 - Lt (Bk & Ahd)	2
52+23 - Rt (Bk)	1	278+01 - Rt (Bk & Ahd)	2
52+43 Rt (Rt)	1	278+01 - Lt (Bk & Ahd)	2
52+44 Rt (Bk)	1	283+42 - CL (Rt)	1
52+82 - Rt (Bk & Ahd)	2	290+93 - Rt (Bk & Ahd)	2
53+31 - CL (Lt & Rt)	2	290+93 - Lt (Bk & Ahd)	2
56+51 - CL (Lt & Rt)	2	301+40 - Rt (Bk & Ahd)	2
56+93 - Lt (Bk & Ahd)	2	301+96 - CL (Lt & Rt)	2
66+03 - Rt (Ahd)	1	308+40 - Rt (Bk & Ahd)	2
66+03 - Rt (Bk)	1	316+91 - CL (Lt & Rt)	2
76+26 - 76+44 - Rt (Rt)	1	317+32 - Lt (Bk & Ahd)	2
76+29 - Rt (Bk)	1	317+32 - Rt (Bk & Ahd)	2
79+09 - Rt (Ahd)	1	339+37 - Lt (Bk & Ahd)	2
77+28 - Rt (Bk & Ahd)	2	349+76 - Rt (Bk & Ahd)	2
78+31 - CL (Lt & Rt)	2	349+76 - Lt (Bk & Ahd)	2
79+09 - Rt (Rt)	1	354+12 -CL (Lt & Rt)	2
86+00 - Rt (Bk & Ahd)	2	356+87 - Lt (Bk & Ahd)	2
91+15 - CL (Lt & Rt)	2	357+19 - Rt (Bk & Ahd)	2
91+52 - Rt (Bk & Ahd)	2	360+64 - CL (Lt & Rt)	2
92+42 - Lt (Bk & Ahd)	2	362+46 - Lt (Bk & Ahd)	2
106+12 - CL (Lt & Rt)	2	370+00 - Lt (Bk & Ahd)	2
119+47 - Lt (Bk & Ahd)	2	384+35 - Rt (Bk & Ahd)	2
127+11 - Lt (Bk & Ahd)	2	384+44 - CL (Lt & Rt)	2
132+02 - Rt (Bk & Ahd)	2	384+96 - CL (Lt & Rt)	2
145+17 - Lt (Bk & Ahd)	2	397+36 - Rt (Bk & Ahd)	2
146+54 - Rt (Bk & Ahd)	2	398+14 - CL (Lt & Rt)	2
147+52 - Lt (Bk & Ahd)	2	404+35 - Lt (Bk & Ahd)	2
150+44 - CL (Lt & Rt)	2	419+45 - CL (Lt & Rt)	2
158+39 - Rt (Bk & Ahd)	2	425+55 - Lt (Bk & Ahd)	2
168+81 - CL (Lt & Rt)	2	425+68 - Rt (Bk & Ahd)	2
157+96 - Rt (Bk)	1	434+96 - CL (Lt & Rt)	2
168+82 - Rt (Ahd)	1	436+35 - CL (Lt & Rt)	2
166+53 - Rt (Ahd)	1	438+23 - CL (Lt & Rt)	2
172+66 - Rt (Bk & Ahd)	2	438+29 - CL (Lt & Rt)	2
185+13 - Rt (Bk & Ahd)	2	456+17 - Rt (Bk & Ahd)	2
185+39 - Lt (Bk & Ahd)	2	462+20 - Rt (Bk & Ahd)	2
196+79 - Rt (Bk & Ahd)	2	462+20 - Lt (Bk & Ahd)	2
198+23 - CL (Lt & Rt)	2	464+00 - Rt (Bk & Ahd)	2
198+37 - CL (Lt & Rt)	2	464+95 - Lt (Bk & Ahd)	2
198+76 - Rt (Bk & Ahd)	2	464+95 - Rt (Bk & Ahd)	2
200+76 - Rt (Bk & Ahd)	2	475+44 - Lt (Bk & Ahd)	2
207+85 - CL (Lt & Rt)	2	475+11 - Rt (Bk & Ahd)	2
Total			**184**	**EA**

TEMPORARY PAVEMENT MARKING

Location	Start Station	End Station	Measured Length	Painted Length (1 Application)	Painted Length (5 Applications)*
Centerline Yellow Double Barrier @ 2.0 ft/ft	330+00	356+05	2,605	5,210	26,050
	361+42	361+89	47	94	470
	362+97	370+07	710	1,420	7,100
	370+07	422+52	5,245	10,490	52,450
	427+00	433+56	656	1,312	6,560
	438+00	443+23	523	1,046	5,230
	474+55	475+55	100	200	1,000
	Yellow Double Barrier Total			**19,772**	**98,860**
Centerline Yellow Single Barrier @ 1.25 ft/ft	356+05	361+42	537	671	3,355
	422+52	427+00	448	560	2,800
	433+56	438+00	444	555	2,775
	456+21	464+81	860	1,075	5,375
	469+91	471+00	109	136	680
	471+00	474+55	355	444	2,220
	475+55	476+00	45	56	280
	483+78	487+00	322	403	2,015
	Yellow Single Barrier Total			**3,900**	**19,500**
Centerline Yellow Skip @ 0.25 ft/ft	464+81	469+91	510	128	640
	476+00	483+78	778	195	975
	Yellow Skip Total			**323**	**1,615**
TOTAL SHORT TERM 4IN LINE-TYPE NR TOTAL				**23,995**	**119,975**

*NOTE: QUANTITY INCLUDES ONE APPLICATION AFTER EACH OF THE FOLLOWING:

- 1ST LIFT OF HBP
- 2ND LIFT OF HBP
- 3RD LIFT OF HBP
- GRINDING RUMBLE STRIPS
- FOG SEALING RUMBLE STRIPS

This document was originally issued and sealed by William Doerr, Registration Number PE- 7113, on 12/04/15 and the original document is stored at the North Dakota Department of Transportation

Basis of Estimate

ND 58

Jct 200 to Jct 1804

Alignment	Common Excavation Type A (CY) Pay Item	Embankment (CY)	Common Excavation Waste (CY) Pay Item	Borrow Excavation (CY) Pay Item	Topsoil (CY) Pay Item
ND 58	27,840	186,166	23,233	158,326	61,694
Totals =	**27,840**	**186,166**	**23,233**	**158,326**	**61,694**

Note: 25 percent additional volume is included for shrinkage in earth embankment.

This document was originally issued and sealed by William Doerr, Registration Number PE- 7113, on 12/04/15 and the original document is stored at the North Dakota Department of Transportation

Earthwork Summary

ND 58

Jct 200 to Jct 1804

STATE	PROJECT NO.	SECTION NO.	SHEET NO.
ND	SOIB-7-058(013)000	11	2

	End Areas (SF)		Volume (CY)		
	Exca	Fill	Exca	Fill	Mass Ordinate
5+00	15.4	31.2	28.0	0.0	28
6+00	9.2	17.6	45.6	113.0	-39
7+00	2.6	23.4	21.9	95.0	-112
8+00	2.2	37.5	8.8	141.1	-245
8+94	0.7	44.4	4.9	178.3	-418
9+00	0.6	53.5	0.1	13.6	-432
10+00	0.0	59.6	1.1	261.7	-692
11+00	0.0	70.6	0.0	301.5	-994
12+00	0.0	72.6	0.0	331.5	-1325
13+00	0.0	63.6	0.0	415.2	-1740
14+00	3.4	33.5	6.3	224.7	-1959
15+00	0.0	110.4	6.3	333.0	-2285
16+00	1.5	100.2	2.8	487.4	-2770
16+74	1.6	114.8	4.3	368.3	-3134
17+00	1.3	120.0	1.4	141.3	-3274
18+00	0.7	135.7	3.8	591.7	-3862
19+00	0.0	148.6	1.4	658.1	-4519
20+00	0.0	168.1	0.0	733.1	-5252
21+00	0.4	168.0	0.7	777.9	-6029
22+00	0.0	172.0	0.7	787.0	-6815
23+00	0.0	176.3	0.0	806.1	-7621
24+00	0.0	203.5	0.0	879.0	-8500
24+84	0.0	197.3	0.0	779.3	-9279
25+00	0.0	316.1	0.0	190.2	-9470
25+88	0.0	174.8	0.0	1000.1	-10470
26+00	0.0	45.8	0.0	461.3	-10931
27+00	0.0	332.6	0.0	875.8	-11807
28+00	0.0	324.1	0.0	1520.0	-13327
29+00	0.0	342.7	0.0	1543.4	-14870
30+00	0.0	336.2	0.0	1571.4	-16442
31+00	0.0	295.3	0.0	1461.6	-17903
31+18	0.0	249.7	0.0	227.1	-18130
31+48	0.0	209.7	0.0	319.0	-18449
32+00	0.0	160.8	0.0	446.0	-18895
32+98	0.0	111.2	0.0	617.1	-19512
33+00	0.0	111.6	0.0	10.3	-19523
34+00	0.0	99.5	0.0	488.5	-20011
35+00	0.0	85.8	0.0	428.9	-20440
36+00	0.0	98.8	0.0	427.2	-20867
37+00	5.5	85.2	10.3	525.9	-21383
38+00	4.7	85.9	18.9	496.2	-21860
39+00	2.6	68.6	13.4	357.6	-22204
40+00	5.6	86.1	15.2	458.0	-22647
41+00	18.6	49.8	44.8	314.7	-22917
42+00	3.1	91.0	40.1	326.0	-23203
43+00	12.0	86.0	27.8	409.9	-23585
44+00	15.1	68.4	50.0	357.6	-23893

	End Areas (SF)		Volume (CY)		
	Exca	Fill	Exca	Fill	Mass Ordinate
45+00	15.0	63.2	55.6	304.7	-24142
46+00	15.8	56.9	57.0	278.1	-24363
47+00	15.1	67.1	57.3	287.0	-24592
48+00	12.1	68.1	50.4	312.9	-24855
49+00	13.6	76.1	47.7	333.8	-25141
50+00	10.7	86.7	45.0	376.9	-25473
51+00	8.6	90.1	35.7	409.4	-25847
52+00	0.0	183.0	16.0	832.3	-26663
53+00	75.0	8.0	138.8	442.1	-26966
53+35	53.8	95.6	83.4	83.9	-26967
54+00	50.5	278.5	125.5	562.8	-27404
55+00	38.9	330.4	165.5	1409.5	-28648
56+00	30.7	344.6	128.8	1562.5	-30082
57+00	33.0	118.6	118.0	1172.1	-31136
58+00	44.0	182.6	142.6	797.3	-31791
58+65	105.1	217.5	179.4	602.1	-32213
58+95	59.9	239.2	91.7	317.2	-32439
59+00	52.7	244.6	10.4	56.0	-32484
60+00	18.4	172.2	131.6	964.8	-33318
60+45	7.2	142.9	21.3	328.2	-33624
61+00	12.8	115.4	20.3	428.8	-34033
62+00	14.2	93.4	49.9	583.4	-34567
63+00	7.0	98.6	39.2	444.5	-34972
64+00	3.2	119.6	18.9	605.1	-35558
65+00	2.8	145.2	11.2	612.9	-36160
66+00	1.0	25.9	7.0	596.0	-36749
67+00	44.7	163.7	84.7	438.8	-37103
68+00	30.5	177.2	139.3	789.1	-37753
69+00	25.6	161.4	103.9	783.9	-38433
70+00	46.5	150.5	133.6	721.9	-39021
71+00	63.9	139.0	204.6	670.1	-39487
72+00	68.4	132.0	245.1	627.5	-39869
73+00	62.5	122.7	242.5	589.7	-40216
74+00	57.5	122.0	222.3	566.3	-40560
75+00	62.5	112.5	222.3	542.7	-40881
76+00	128.9	109.9	354.4	514.8	-41041
77+00	138.0	146.5	494.1	843.5	-41391
77+79	275.5	162.9	604.9	565.7	-41351
78+00	265.7	166.1	210.5	159.9	-41301
79+00	251.8	210.3	958.3	971.3	-41314
80+00	153.3	122.4	750.1	770.1	-41334
81+00	158.9	97.9	578.1	510.0	-41266
82+00	168.3	93.2	605.8	442.5	-41102
83+00	171.2	102.7	628.7	453.5	-40927
83+09	172.0	101.9	57.2	42.6	-40913
83+39	155.4	91.9	181.8	134.6	-40865
84+00	181.2	70.7	380.2	229.7	-40715

	End Areas (SF)		Volume (CY)		
	Exca	Fill	Exca	Fill	Mass Ordinate
84+89	133.4	40.7	518.6	229.5	-40426
85+00	132.8	39.9	54.2	20.5	-40392
85+59	152.3	22.1	311.5	84.7	-40165
86+00	233.7	12.0	293.0	132.4	-40004
87+00	154.6	43.3	719.0	128.1	-39414
88+00	152.1	47.9	567.8	211.1	-39057
89+00	173.3	49.0	602.5	224.3	-38679
90+00	174.6	43.0	644.2	213.0	-38247
91+00	192.4	55.6	679.8	328.2	-37896
92+00	1.0	6.7	358.3	244.3	-37782
93+00	0.0	12.5	1.9	44.4	-37824
94+00	0.3	13.8	0.5	60.9	-37885
95+00	0.0	15.1	0.5	66.9	-37951
96+00	0.1	14.1	0.2	67.4	-38018
97+00	0.0	25.7	0.2	91.9	-38110
98+00	0.0	26.8	0.0	121.3	-38231
99+00	0.0	24.6	0.0	118.8	-38350
100+00	0.0	31.6	0.0	129.9	-38480
101+00	0.0	38.0	0.0	161.0	-38641
102+00	0.0	53.4	0.0	211.6	-38853
103+00	0.0	57.1	0.0	255.9	-39109
104+00	0.2	56.9	0.3	264.0	-39372
105+00	0.1	27.2	0.5	394.8	-39767
106+00	0.0	41.1	0.3	158.1	-39924
106+18	0.0	35.2	0.0	31.8	-39956
107+00	0.0	86.5	0.0	231.0	-40187
108+00	0.0	137.3	0.0	518.0	-40705
109+00	0.0	165.4	0.0	700.6	-41406
110+00	0.0	140.3	0.0	707.4	-42113
111+00	0.0	134.5	0.0	636.0	-42749

This document was originally issued and sealed by William Doerr, Registration Number PE-7113, on 12/04/15 and the original document is stored at the North Dakota Department of Transportation.

Earthwork Values

ND 58

Jct 200 to Jct 1804

STATE	PROJECT NO.	SECTION NO.	SHEET NO.
ND	SOIB-7-058(013)000	11	3

	End Areas (SF)		Volume (CY)		
	Exca	Fill	Exca	Fill	Mass Ordinate
111+48	0.0	120.0	0.0	282.7	-43032
111+78	0.0	105.9	0.0	156.8	-43189
112+00	0.0	99.2	0.0	104.5	-43293
113+00	0.0	66.2	0.0	382.8	-43676
113+28	0.0	48.7	0.0	74.4	-43750
114+00	0.0	53.2	0.0	169.7	-43920
115+00	0.0	39.2	0.0	213.7	-44134
116+00	0.0	34.7	0.0	171.0	-44305
117+00	0.0	33.8	0.0	158.6	-44464
118+00	0.0	32.5	0.0	153.5	-44617
119+00	0.0	27.0	0.0	237.8	-44855
120+00	0.0	28.7	0.0	129.1	-44984
121+00	0.0	36.5	0.0	150.9	-45135
122+00	0.0	40.2	0.0	177.5	-45312
123+00	0.0	42.3	0.0	191.0	-45503
124+00	0.0	40.3	0.0	191.3	-45695
125+00	0.0	31.3	0.0	165.8	-45860
126+00	0.0	29.5	0.0	140.7	-46001
127+00	0.0	17.6	0.0	209.0	-46210
128+00	0.0	36.8	0.0	125.8	-46336
129+00	0.0	40.1	0.0	177.9	-46514
130+00	0.0	35.8	0.0	175.6	-46689
131+00	0.0	19.8	0.0	128.5	-46818
132+00	41.5	13.4	76.8	176.9	-46918
133+00	0.0	18.3	76.8	73.4	-46914
134+00	0.0	19.4	0.0	87.3	-47002
135+00	0.0	15.4	0.0	80.7	-47082
136+00	0.0	12.8	0.0	65.3	-47148
137+00	0.0	12.8	0.0	59.3	-47207
138+00	0.0	10.6	0.0	54.2	-47261
139+00	0.0	11.5	0.0	51.0	-47312
140+00	0.0	15.7	0.0	62.9	-47375
141+00	0.0	20.1	0.0	82.8	-47458
142+00	0.0	31.0	0.0	118.2	-47576
143+00	0.0	37.1	0.0	157.6	-47734
144+00	0.0	40.4	0.0	304.2	-48038
145+00	0.0	20.5	0.0	290.9	-48329
146+00	0.0	225.5	0.0	694.5	-49023
147+00	0.0	90.6	0.0	831.7	-49855
148+00	0.1	72.6	0.1	377.7	-50233
149+00	0.0	50.6	0.1	285.0	-50517
150+00	15.4	14.1	28.6	149.6	-50638
151+00	0.0	21.5	28.6	82.4	-50692
152+00	0.0	48.1	0.0	161.1	-50853
153+00	0.0	47.6	0.0	221.6	-51075
154+00	0.0	47.3	0.0	219.8	-51295
155+00	0.0	53.5	0.0	233.4	-51528

	End Areas (SF)		Volume (CY)		
	Exca	Fill	Exca	Fill	Mass Ordinate
156+00	20.0	18.0	37.1	165.5	-51656
156+59	0.0	53.6	21.8	97.5	-51732
157+00	0.0	60.2	0.0	108.6	-51841
158+00	0.0	60.4	0.0	279.0	-52120
158+00	0.0	60.5	0.0	100.2	-52220
158+50	0.0	53.8	0.0	133.2	-52353
159+00	35.3	124.3	32.4	204.6	-52525
160+00	33.9	113.1	128.2	549.7	-52947
161+00	40.9	90.9	138.5	472.2	-53281
162+00	35.3	95.1	141.0	430.4	-53570
163+00	17.3	96.4	97.3	443.2	-53916
164+00	26.2	81.6	80.6	512.1	-54347
165+00	21.7	107.0	88.7	436.6	-54695
166+00	16.7	127.2	71.1	542.1	-55166
166+79	11.7	67.1	41.7	356.7	-55481
167+00	8.5	66.6	7.8	64.0	-55538
167+31	6.0	58.3	8.0	85.9	-55615
168+00	4.2	33.2	13.0	146.9	-55749
168+72	0.0	18.6	5.5	86.1	-55830
169+00	0.0	10.2	0.0	18.8	-55849
170+00	0.0	11.6	0.0	50.3	-55899
171+00	0.0	24.8	0.0	84.3	-55983
172+00	0.0	29.0	0.0	374.5	-56358
173+00	0.0	37.9	0.0	154.9	-56513
174+00	0.0	55.9	0.0	217.3	-56730
175+00	0.0	53.7	0.0	253.8	-56984
176+00	0.0	73.0	0.0	293.4	-57277
177+00	0.0	81.4	0.0	357.4	-57634
178+00	0.0	79.2	0.0	371.8	-58006
179+00	0.0	82.1	0.0	373.5	-58380
180+00	0.0	84.6	0.0	385.8	-58766
181+00	0.0	77.5	0.0	375.2	-59141
182+00	0.0	72.0	0.0	346.2	-59487
182+77	0.0	72.5	0.0	256.9	-59744
183+00	0.0	75.8	0.0	79.7	-59824
184+00	0.0	56.9	0.0	407.2	-60231
185+00	19.8	16.1	36.7	268.9	-60463
186+00	0.0	46.1	36.7	144.1	-60570
186+27	0.0	49.2	0.0	59.2	-60629
187+00	0.0	41.3	0.0	153.4	-60783
188+00	0.0	47.0	0.0	204.4	-60987
189+00	0.0	51.9	0.0	228.9	-61216
190+00	0.0	42.1	0.0	217.6	-61434
191+00	0.0	30.9	0.0	169.0	-61603
192+00	0.0	23.0	0.0	124.7	-61727
193+00	0.0	22.6	0.0	105.5	-61833
193+54	0.0	24.2	0.0	55.8	-61889

	End Areas (SF)		Volume (CY)		
	Exca	Fill	Exca	Fill	Mass Ordinate
194+00	0.0	25.4	0.0	55.8	-61944
195+00	0.0	31.1	0.0	130.7	-62075
195+37	0.0	26.9	0.0	49.1	-62124
196+00	0.7	19.3	0.8	167.7	-62291
197+00	3.7	7.8	8.1	62.7	-62346
197+01	77.0	8.3	2.2	0.6	-62344
198+00	0.0	26.1	140.4	178.4	-62382
199+00	1.6	11.0	3.0	85.7	-62465
200+00	0.0	36.4	3.0	234.5	-62696
201+00	5.2	13.1	9.6	114.5	-62801
202+00	0.0	69.6	9.6	191.3	-62983
203+00	0.0	85.9	0.0	359.8	-63343
203+17	0.0	83.1	0.0	65.0	-63408
204+00	0.0	103.1	0.0	359.5	-63767
204+17	0.0	119.4	0.0	86.5	-63854
205+00	0.0	152.9	0.0	524.3	-64378
205+67	0.1	157.3	0.1	477.6	-64855
205+97	0.0	161.4	0.1	223.6	-65079
206+00	0.0	160.5	0.0	23.9	-65103
207+00	1.1	126.2	2.0	663.6	-65764
208+00	0.0	93.4	2.0	608.4	-66371
209+00	1.8	128.9	3.3	514.7	-66882
210+00	0.7	169.5	4.6	690.9	-67568
211+00	0.0	188.0	1.3	1027.6	-68595
211+27	0.0	149.3	0.0	208.5	-68803
212+00	15.9	125.8	21.5	466.8	-69248
212+31	0.0	108.1	9.0	165.1	-69405
213+00	6.2	190.3	7.9	480.0	-69877
214+00	18.6	184.7	45.9	867.9	-70699
215+00	19.6	181.4	70.8	847.3	-71475

This document was originally issued and sealed by William Doerr, Registration Number PE-7113, on 12/04/15 and the original document is stored at the North Dakota Department of Transportation.

Earthwork Values

ND 58

Jct 200 to Jct 1804

STATE	PROJECT NO.	SECTION NO.	SHEET NO.
ND	SOIB-7-058(013)000	11	4

	End Areas (SF)		Volume (CY)		
	Exca	Fill	Exca	Fill	Mass Ordinate
216+00	34.0	154.2	99.3	776.7	-72153
217+00	33.6	144.6	125.2	691.7	-72719
217+61	43.5	129.3	87.1	386.8	-73019
217+93	48.8	124.2	54.4	186.6	-73151
218+00	49.6	122.9	13.1	41.2	-73179
219+00	59.5	81.2	201.9	472.4	-73449
219+41	60.7	48.0	91.7	123.2	-73481
220+00	48.0	56.1	118.4	141.7	-73504
220+95	52.4	59.8	175.9	253.8	-73582
221+00	51.5	60.8	10.3	14.9	-73587
222+00	58.0	77.7	202.7	320.6	-73705
223+00	53.8	96.4	207.0	403.0	-73901
223+75	50.3	101.3	143.9	341.8	-74099
224+00	47.1	101.0	45.7	118.7	-74172
225+00	42.2	104.8	165.4	476.4	-74483
225+86	38.6	102.7	129.3	415.4	-74769
226+00	39.0	100.7	19.4	63.7	-74813
227+00	72.8	90.2	206.9	441.9	-75048
228+00	33.0	84.9	195.9	505.3	-75357
228+66	24.1	14.4	70.4	152.7	-75440
229+00	6.3	9.7	18.9	18.7	-75439
230+00	15.7	67.6	40.8	178.8	-75577
230+53	0.0	65.3	15.4	162.8	-75725
231+00	17.0	70.6	14.8	148.2	-75858
232+00	20.6	83.4	69.6	356.5	-76145
233+00	26.0	87.2	86.3	394.9	-76454
233+33	26.2	93.4	31.8	137.6	-76560
234+00	31.8	102.6	72.1	304.4	-76792
235+00	33.0	119.1	120.0	513.2	-77185
236+00	31.0	107.0	118.4	523.3	-77590
237+00	34.7	69.9	121.6	609.5	-78078
238+00	0.7	18.1	65.5	203.8	-78216
239+00	0.0	123.6	1.3	328.1	-78543
239+08	0.0	112.8	0.0	43.0	-78586
240+00	0.0	90.3	0.0	433.1	-79019
241+00	49.8	95.7	92.2	430.4	-79357
241+88	61.3	98.3	180.7	394.4	-79571
242+00	62.2	100.3	27.8	55.8	-79599
243+00	64.3	117.8	234.2	504.8	-79870
244+00	84.2	122.8	275.0	557.1	-80152
245+00	83.4	106.6	310.4	531.0	-80372
246+00	66.0	114.8	276.7	512.6	-80608
247+00	53.8	111.7	221.9	524.3	-80910
248+00	32.9	97.2	160.5	483.5	-81233
249+00	33.6	72.7	123.2	393.2	-81503
250+00	30.1	71.3	117.9	333.2	-81719
251+00	31.2	95.7	113.3	386.5	-81992

	End Areas (SF)		Volume (CY)		
	Exca	Fill	Exca	Fill	Mass Ordinate
252+00	31.5	95.4	116.0	442.3	-82318
253+00	20.5	89.9	96.4	428.9	-82651
254+00	16.8	89.1	69.1	414.3	-82996
255+00	13.8	91.6	56.5	418.4	-83358
256+00	7.6	98.6	39.6	440.4	-83759
256+77	12.2	104.1	28.3	362.3	-84093
257+00	18.0	119.7	12.8	118.1	-84198
258+00	19.0	133.4	68.6	585.9	-84715
258+27	22.9	131.1	20.9	165.3	-84860
258+57	23.4	133.7	25.7	183.9	-85018
259+00	21.7	133.4	35.9	265.9	-85248
260+00	20.7	133.0	78.5	616.6	-85786
261+00	15.3	136.7	66.8	624.1	-86343
262+00	15.4	145.4	57.0	652.8	-86939
263+00	31.7	129.7	87.3	636.8	-87488
263+87	22.9	138.4	88.2	541.3	-87942
264+00	17.7	123.0	9.6	277.5	-88209
264+77	17.1	135.7	49.8	463.4	-88623
265+00	13.0	131.3	12.6	139.7	-88750
266+00	9.0	135.8	40.6	618.3	-89328
267+00	5.6	147.8	27.0	656.5	-89957
268+00	2.1	162.8	14.3	719.0	-90662
269+00	4.1	158.6	11.6	743.9	-91394
270+00	4.0	173.3	15.1	768.3	-92147
270+07	3.7	173.4	1.1	59.4	-92206
270+37	2.4	165.4	3.4	235.2	-92438
271+00	3.7	150.5	7.0	457.6	-92888
271+87	22.7	121.8	42.6	550.8	-93396
272+00	22.9	120.6	10.6	70.7	-93456
273+00	22.9	109.9	84.7	533.5	-93905
274+00	38.1	118.2	112.9	528.0	-94320
275+00	42.2	128.6	148.7	571.4	-94743
276+00	42.3	135.2	156.4	610.7	-95197
277+00	30.8	157.6	135.3	677.8	-95740
278+00	0.0	34.6	57.0	895.0	-96578
279+00	0.0	202.8	0.0	549.6	-97127
280+00	0.0	174.2	0.0	872.6	-98000
281+00	0.0	143.0	0.0	734.2	-98734
282+00	0.0	131.6	0.0	635.6	-99370
283+00	0.0	49.4	0.0	418.8	-99789
284+00	0.0	43.2	0.0	214.2	-100003
285+00	0.0	77.5	0.0	279.3	-100282
286+00	0.0	83.6	0.0	372.9	-100655
287+00	0.0	101.0	0.0	427.2	-101082
288+00	0.0	100.7	0.0	466.8	-101549
289+00	0.0	87.7	0.0	436.0	-101985
290+00	0.0	89.8	0.0	610.8	-102596

	End Areas (SF)		Volume (CY)		
	Exca	Fill	Exca	Fill	Mass Ordinate
291+00	0.0	9.9	0.0	230.8	-102827
292+00	5.8	108.5	10.7	274.1	-103090
293+00	6.3	92.6	22.3	465.5	-103533
294+00	6.7	75.1	24.1	388.1	-103897
295+00	7.8	70.9	26.9	337.9	-104208
296+00	9.3	72.1	31.7	330.9	-104507
297+00	10.2	65.6	36.2	318.5	-104790
298+00	10.9	66.8	39.0	306.3	-105057
299+00	29.5	76.2	74.7	331.0	-105313
300+00	35.6	89.8	120.4	384.3	-105577
301+00	38.0	93.1	136.1	423.4	-105864
302+00	21.0	102.2	109.1	452.0	-106207
303+00	30.0	95.4	94.3	457.2	-106570
304+00	42.3	108.4	133.8	471.6	-106908
305+00	40.0	109.7	152.4	504.8	-107260
306+00	43.4	116.0	154.5	522.5	-107628
307+00	35.8	104.4	146.6	510.1	-107992
308+00	34.6	80.8	130.3	428.6	-108290
309+00	42.3	82.6	142.5	378.1	-108526
310+00	29.1	83.9	132.2	385.4	-108779
311+00	30.3	96.1	109.9	416.8	-109086
312+00	27.5	97.5	106.9	448.3	-109427
313+00	29.6	88.2	105.7	429.8	-109751
314+00	27.5	93.7	105.7	421.0	-110067
315+00	40.3	98.3	125.5	444.4	-110386
316+00	43.1	89.8	154.5	435.3	-110666
317+00	1.0	15.6	81.7	443.8	-111029
317+78	0.0	108.4	1.4	223.6	-111251
318+00	42.2	159.0	17.3	136.8	-111370
319+00	39.8	143.6	151.9	700.5	-111919

This document was originally issued and sealed by William Doerr, Registration Number PE-7113, on 12/04/15 and the original document is stored at the North Dakota Department of Transportation.

Earthwork Values

ND 58

Jct 200 to Jct 1804

STATE	PROJECT NO.	SECTION NO.	SHEET NO.
ND	SOIB-7-058(013)000	11	5

	End Areas (SF)		Volume (CY)		
	Exca	Fill	Exca	Fill	Mass Ordinate
320+00	23.8	135.1	117.8	645.1	-112446
321+00	31.0	139.0	101.5	634.3	-112979
322+00	53.9	125.1	157.1	611.2	-113433
323+00	41.6	123.2	176.8	574.7	-113831
323+08	42.1	123.9	12.2	45.2	-113864
323+38	44.6	112.5	48.2	164.1	-113980
324+00	26.3	82.8	81.6	280.7	-114179
324+28	22.0	73.0	25.0	100.7	-114255
324+88	0.0	47.1	24.4	166.8	-114397
325+00	0.0	46.1	0.0	26.1	-114423
325+58	0.0	33.2	0.0	106.3	-114529
326+00	0.0	35.7	0.0	67.1	-114597
327+00	0.5	25.8	1.0	142.5	-114738
328+00	0.0	25.0	1.0	117.6	-114855
329+00	0.5	34.2	0.9	136.9	-114991
330+00	0.0	43.8	0.9	180.5	-115170
331+00	0.4	17.6	0.7	142.1	-115312
332+00	1.7	11.1	3.8	66.5	-115374
333+00	0.5	23.4	4.2	80.0	-115450
334+00	0.6	26.6	2.1	115.7	-115564
335+00	0.9	37.2	2.7	147.5	-115709
336+00	2.8	21.0	6.9	134.6	-115836
337+00	2.5	2.5	9.9	154.4	-115981
338+00	2.5	17.9	9.2	47.1	-116019
339+00	1.5	12.6	7.4	170.4	-116182
340+00	0.4	22.0	3.5	80.1	-116258
341+00	0.4	36.6	1.5	135.7	-116392
342+00	0.7	24.0	2.1	140.3	-116531
343+00	2.0	4.8	5.1	166.6	-116692
344+00	3.6	3.3	10.5	18.7	-116700
345+00	1.6	37.4	9.6	94.1	-116785
346+00	4.8	43.5	11.8	187.2	-116960
347+00	2.9	50.9	14.3	218.4	-117164
348+00	4.4	64.6	13.6	267.2	-117418
349+00	7.3	57.2	21.7	481.8	-117878
350+00	3.4	9.4	19.7	154.0	-118012
351+00	4.7	70.1	15.0	183.9	-118181
352+00	6.0	69.0	19.8	322.1	-118483
353+00	5.1	39.7	20.5	251.8	-118715
354+00	8.6	2.0	25.4	96.6	-118786
355+00	2.4	36.2	20.3	88.5	-118854
355+50	2.3	43.3	4.3	92.1	-118942
356+00	6.8	45.2	8.3	202.2	-119136
357+00	173.9	0.6	334.4	205.9	-119007
358+00	3.3	66.9	328.1	156.3	-118835
358+35	2.3	62.3	3.6	104.2	-118936
359+00	3.0	45.8	6.4	163.0	-119093

	End Areas (SF)		Volume (CY)		
	Exca	Fill	Exca	Fill	Mass Ordinate
360+00	2.7	13.0	10.6	136.2	-119218
361+00	5.5	7.5	15.2	47.5	-119251
362+00	4.5	46.0	18.6	223.8	-119456
362+97	3.3	115.4	14.0	363.0	-119805
363+00	3.3	124.3	0.3	15.6	-119820
364+00	1.7	143.5	9.2	619.9	-120431
365+00	1.6	126.8	6.2	625.6	-121050
365+03	1.6	126.0	0.2	15.6	-121065
366+00	3.1	100.0	8.6	509.1	-121566
367+00	3.1	73.2	11.6	400.9	-121955
367+87	0.8	58.3	6.3	266.2	-122215
368+00	3.8	61.1	1.1	34.8	-122249
368+27	4.0	62.8	3.8	76.3	-122321
368+57	4.2	65.8	4.6	91.1	-122408
369+00	2.9	59.7	5.7	249.3	-122651
370+00	3.0	35.1	11.0	319.5	-122960
370+07	2.9	34.0	0.8	11.5	-122971
371+00	4.0	71.4	11.9	226.5	-123185
372+00	4.1	72.7	15.1	333.6	-123504
373+00	2.2	106.7	11.8	415.2	-123907
374+00	3.0	100.4	9.8	479.3	-124377
375+00	2.6	98.1	10.4	459.5	-124826
376+00	2.9	94.4	10.2	445.7	-125261
377+00	2.5	89.8	10.1	426.4	-125678
378+00	2.4	91.2	9.2	418.9	-126087
379+00	2.3	90.4	8.8	420.4	-126499
380+00	3.6	93.2	10.9	425.1	-126913
381+00	3.7	98.2	13.4	443.2	-127343
381+35	3.7	97.9	4.7	157.6	-127496
382+00	1.5	112.6	6.3	318.0	-127808
383+00	1.5	110.0	5.6	515.2	-128317
383+87	2.7	20.5	6.8	261.8	-128572
384+00	3.6	2.7	1.5	207.1	-128778
385+00	1.1	85.3	8.7	1203.8	-129973
386+00	1.6	89.0	5.0	403.4	-130371
387+00	3.0	87.6	8.5	408.7	-130772
388+00	0.8	98.2	7.1	430.1	-131194
389+00	1.0	107.9	3.3	476.9	-131668
390+00	1.4	75.6	4.4	424.8	-132088
391+00	0.6	81.5	3.8	363.6	-132448
392+00	1.5	66.7	4.0	442.9	-132887
393+00	2.9	35.7	8.2	237.1	-133116
394+00	1.9	76.8	8.9	260.5	-133367
395+00	1.7	82.5	6.5	368.7	-133730
396+00	2.5	65.9	7.7	343.5	-134066
396+81	0.7	62.9	4.8	241.7	-134302
397+00	1.4	35.4	0.8	193.1	-134495

	End Areas (SF)		Volume (CY)		
	Exca	Fill	Exca	Fill	Mass Ordinate
398+00	1.7	51.4	5.8	200.8	-134690
399+00	3.5	24.2	9.6	175.0	-134855
399+33	5.1	22.2	5.2	35.5	-134885
400+00	3.3	29.1	10.3	79.4	-134955
401+00	4.2	36.9	13.8	152.8	-135094
402+00	1.8	52.4	11.2	206.6	-135289
403+00	1.9	47.8	6.9	231.9	-135514
404+00	6.0	18.7	14.5	254.0	-135754
405+00	4.6	23.1	19.6	96.8	-135831
406+00	4.3	24.9	16.4	111.1	-135925
407+00	6.8	24.6	20.5	114.4	-136019
408+00	7.0	22.9	25.5	110.0	-136104
409+00	5.0	27.5	22.2	116.7	-136198
410+00	5.3	37.0	19.1	149.2	-136328
411+00	3.4	41.7	16.1	282.0	-136594
412+00	3.7	16.5	13.1	134.6	-136716
413+00	3.5	45.0	13.4	142.3	-136845
414+00	4.1	54.6	14.1	230.6	-137061
415+00	2.6	76.0	12.5	302.5	-137351
416+00	2.8	83.0	10.1	368.1	-137709
417+00	2.8	68.7	10.4	351.1	-138050
417+58	2.8	68.7	6.0	184.0	-138228
418+00	3.7	76.3	5.0	141.5	-138364
419+00	2.1	92.5	10.7	390.5	-138744
419+32	1.8	104.6	2.3	144.3	-138886
420+00	2.2	113.1	5.1	344.6	-139226
421+00	3.5	110.8	10.4	518.4	-139733
422+00	3.1	114.0	12.2	520.6	-140242
423+00	2.3	99.0	10.0	493.1	-140725
424+00	1.6	30.5	7.2	399.7	-141117

This document was originally issued and sealed by William Doerr, Registration Number PE-7113, on 12/04/15 and the original document is stored at the North Dakota Department of Transportation.

Earthwork Values

ND 58

Jct 200 to Jct 1804

STATE	PROJECT NO.	SECTION NO.	SHEET NO.
ND	SOIB-7-058(013)000	11	6

	End Areas (SF)		Volume (CY)		
	Exca	Fill	Exca	Fill	Mass Ordinate
425+00	2.5	5.8	7.5	284.1	-141394
426+00	1.6	10.3	7.6	37.3	-141424
427+00	2.2	61.0	7.0	164.9	-141582
428+00	3.2	51.6	9.9	260.5	-141832
429+00	2.0	44.7	9.6	222.9	-142046
430+00	1.7	39.1	6.9	194.1	-142233
431+00	1.8	32.7	6.4	166.2	-142393
432+00	1.7	35.6	6.5	158.1	-142544
433+00	1.9	38.6	6.7	171.7	-142709
434+00	1.8	36.2	6.9	447.9	-143150
435+00	4.2	21.4	11.2	133.1	-143272
436+00	2.5	16.4	12.4	87.4	-143347
437+00	2.5	44.2	9.2	140.3	-143478
438+00	0.7	118.0	5.9	375.5	-143848
439+00	1.5	74.8	3.9	446.2	-144290
440+00	1.5	132.4	5.5	479.6	-144764
440+18	1.6	137.4	1.0	109.4	-144872
440+83	0.8	47.7	2.9	278.4	-145148
441+00	0.6	220.0	0.5	108.5	-145256
441+02	0.6	46.2	0.1	13.4	-145269
441+54	1.0	35.8	1.5	98.0	-145366
441+58	1.2	30.8	0.2	6.9	-145372
442+00	3.2	305.7	3.4	324.7	-145694
442+90	13.6	125.3	27.8	892.8	-146559
443+00	16.4	187.0	5.8	75.9	-146629
443+28	14.2	580.6	15.7	491.4	-147105
456+00	14.8	450.7	684.5	30372.9	-176793
456+55	19.3	282.1	34.4	924.4	-177683
457+00	27.8	9.5	39.7	307.1	-177950
457+86	19.4	0.8	75.0	20.5	-177896
458+00	23.6	30.3	11.3	10.2	-177895
458+39	5.0	5.7	20.4	32.1	-177907
458+61	5.8	6.2	4.4	6.1	-177908
459+00	7.0	143.4	9.3	136.5	-178035
459+33	4.5	81.4	7.1	173.3	-178202
460+00	2.2	83.1	8.3	254.1	-178447
461+00	1.9	57.0	7.7	324.4	-178764
461+71	1.0	38.3	3.8	156.3	-178917
462+00	2.6	5.0	1.9	229.2	-179144
463+00	0.5	78.3	5.7	192.7	-179331
464+00	0.3	78.9	1.5	363.6	-179693
464+23	0.2	71.6	0.2	79.7	-179772
465+00	3.9	13.5	5.9	151.9	-179918
466+00	0.7	51.6	8.5	150.6	-180061
467+00	1.2	19.4	3.4	164.3	-180221
468+00	0.4	42.5	2.9	143.2	-180362
469+00	2.0	38.7	4.4	188.0	-180545

	End Areas (SF)		Volume (CY)		
	Exca	Fill	Exca	Fill	Mass Ordinate
470+00	2.4	49.8	8.2	204.9	-180742
471+00	1.5	68.7	7.2	274.4	-181009
472+00	0.3	85.2	3.2	356.4	-181363
473+00	0.4	99.5	1.2	427.6	-181789
474+00	0.8	111.2	2.2	487.9	-182275
475+00	0.2	145.0	1.8	593.1	-182866
476+00	1.1	150.3	2.3	783.5	-183647
477+00	8.1	2.9	16.9	454.5	-184085
478+00	0.1	215.3	15.2	504.9	-184574
479+00	0.6	52.0	1.4	618.7	-185192
480+00	0.4	60.5	1.9	260.5	-185450
481+00	0.7	51.5	1.9	259.3	-185708
482+00	0.6	52.5	2.3	240.8	-185946
483+00	0.9	50.4	2.8	238.2	-186182
484+00	0.9	67.6	3.3	273.0	-186451
485+00	8.4	44.6	17.1	259.7	-186694
486+00	59.1	6.4	124.8	218.0	-186787
487+00	66.9	24.7	233.2	71.8	-186626
			Volume (CY)		
			Exca	Fill	Mass Ordinate
Totals			27,840	162,933	

This document was originally issued and sealed by William Doerr, Registration Number PE-7113, on 12/04/15 and the original document is stored at the North Dakota Department of Transportation.

Earthwork Values

ND 58

Jct 200 to Jct 1804

STATE	PROJECT NO.	SECTION NO.	SHEET NO.
ND	SOIB-7-058(013)000	11	7

Right of Way / Reference Monuments & Markers

Station	Offset	Iron Pin R/W Monument	R/W Marker (Witness Post)	Iron Pin Reference Monument
11+00.00	60.00	X	X	
11+00.00	75.00	X	X	
26+42.03	-109.95		X	X
26+42.03	70.00		X	X
26+42.03	75.00		X	X
32+50.00	60.00	X	X	
32+50.00	70.00	X	X	
35+80.15	-100.00	X	X	
35+80.17	-109.96	X	X	
51+83.88	-100.00		X	X
52+00.00	60.00	X	X	
52+00.00	83.51		X	X
52+00.00	110.00	X	X	
52+50.51	110.00	X	X	
53+83.06	100.00		X	X
53+83.51	-100.00		X	X
56+81.28	140.00	X	X	
56+81.37	100.00	X	X	
57+31.51	-65.00	X	X	
57+31.59	-100.00	X	X	
60+30.94	140.00	X	X	
60+31.03	100.00	X	X	
65+71.44	-64.98	X	X	
65+71.67	-164.96	X	X	
66+31.46	-74.96	X	X	
66+31.67	-164.96	X	X	
76+00.00	-95.00	X	X	
76+00.00	-75.00	X	X	
77+40.79	-115.00	X	X	
77+40.79	-95.00	X	X	
78+50.00	100.00	X	X	
78+50.00	130.00	X	X	
79+22.73	-115.00		X	X
79+22.73	-100.00		X	X
79+22.73	100.00		X	X
79+22.73	130.00		X	X
81+14.27	100.00	X	X	
81+14.27	110.00	X	X	
91+64.27	70.00	X	X	
91+64.27	110.00	X	X	
92+42.49	-60.00	X	X	
92+42.58	-100.00	X	X	
98+00.00	60.00	X	X	
98+00.00	70.00	X	X	
105+01.95	60.00		X	X
105+02.21	-60.00		X	X
105+95.09	-95.00	X	X	
106+50.00	-95.00	X	X	
106+50.00	-88.05		X	X
106+50.00	-65.00	X	X	
106+61.51	100.00		X	X
132+01.45	-65.00		X	X
132+01.45	100.00		X	X
132+80.71	100.00	X	X	
132+80.82	50.00	X	X	
144+49.23	-65.00	X	X	
144+49.23	50.00	X	X	
144+80.19	-65.00	X	X	
144+80.22	-90.00	X	X	
145+18.76	50.00	X	X	
145+18.76	80.00	X	X	
146+55.15	-65.00	X	X	
146+55.25	-90.00	X	X	
146+55.25	60.00	X	X	
146+55.25	80.00	X	X	
150+00.37	-65.00	X	X	
150+00.37	60.00	X	X	
151+00.25	52.23	X	X	
151+00.25	60.00	X	X	
157+57.88	-65.00		X	X
157+94.88	65.60		X	X
159+18.47	98.87		X	X
159+21.13	-58.57		X	X
167+20.53	-67.07	X	X	
167+20.53	100.00	X	X	
169+31.31	-58.03	X	X	
169+31.31	-50.00	X	X	
170+31.31	75.00	X	X	
170+31.31	100.00	X	X	
173+81.31	-75.00	X	X	
173+81.31	-50.00	X	X	
184+51.79	-75.00	X	X	
184+51.79	75.00	X	X	
185+14.25	-75.00		X	X

Right of Way / Reference Monuments & Markers

Station	Offset	Iron Pin R/W Monument	R/W Marker (Witness Post)	Iron Pin Reference Monument
185+14.25	75.00		X	X
188+00.00	-75.00	X	X	
188+00.00	-59.47	X	X	
192+79.81	-58.96	X	X	
195+26.48	-60.00	X	X	
195+26.48	75.00	X	X	
198+48.29	58.88	X	X	
198+49.36	75.00	X	X	
206+24.77	-85.00	X	X	
206+24.77	-60.00	X	X	
206+89.65	-85.00	X	X	
206+89.65	-60.00	X	X	
207+83.50	82.57	X	X	
207+83.50	95.00	X	X	
210+41.10	-60.00	X	X	
210+41.10	95.00	X	X	
210+81.69	95.04		X	X
210+98.26	-59.93		X	X
212+49.61	75.00		X	X
212+55.45	-100.00		X	X
215+00.00	75.00	X	X	
215+00.00	105.00	X	X	
221+19.40	-100.00	X	X	
221+19.40	105.00	X	X	
221+19.40	115.00	X	X	
222+34.66	-100.00	X	X	
222+34.66	115.00	X	X	
227+26.48	-100.00	X	X	
227+26.48	115.00	X	X	
229+00.00	75.00	X	X	
229+00.00	115.00	X	X	
231+92.92	-100.00	X	X	
231+92.92	75.00	X	X	
232+79.18	-100.09	X	X	
232+79.31	-60.00	X	X	
238+02.56	75.00		X	X
238+05.95	-60.00		X	X
238+08.83	75.00	X	X	
238+10.26	100.00	X	X	
240+47.86	-60.00	X	X	
240+47.86	100.00	X	X	
247+31.05	85.00	X	X	
247+31.05	100.00	X	X	
263+45.81	85.00		X	X
263+70.81	-60.00		X	X
264+70.95	85.00	X	X	
264+90.81	-60.00		X	X
265+00.00	65.00	X	X	
265+00.00	69.19		X	X
265+00.00	85.00	X	X	
270+98.44	65.00	X	X	
271+00.92	95.00	X	X	
278+00.00	75.00	X	X	
278+00.00	95.00	X	X	
283+00.00	75.00	X	X	
283+00.00	85.00	X	X	
290+83.03	-60.00		X	X
290+83.03	85.00		X	X
292+00.00	65.00	X	X	
292+00.00	85.00	X	X	
298+00.00	65.00	X	X	
298+00.00	85.00	X	X	
316+68.73	-60.00		X	X
316+69.68	85.00		X	X
317+90.70	-60.00		X	X
318+42.46	85.00		X	X
326+00.00	75.00	X	X	
326+00.00	85.00	X	X	
334+90.77	60.00	X	X	
334+90.77	75.00	X	X	
341+40.77	-85.00	X	X	
341+40.77	-60.00	X	X	
341+40.77	60.00	X	X	
341+40.77	100.00	X	X	
342+40.77	-85.00	X	X	
342+40.77	-75.00	X	X	
343+40.77	75.00	X	X	
343+40.77	100.00	X	X	
343+87.42	-75.00		X	X
343+87.42	75.00		X	X
354+62.33	-80.00	X	X	
354+62.33	-75.00	X	X	
355+62.44	65.00	X	X	
355+62.44	75.00	X	X	

Right of Way / Reference Monuments & Markers

Station	Offset	Iron Pin R/W Monument	R/W Marker (Witness Post)	Iron Pin Reference Monument
356+92.46	-80.00	X	X	
356+92.46	65.00	X	X	
357+54.41	-80.00	X	X	
366+45.05	-65.00	X	X	
366+45.05	50.00	X	X	
369+28.21	-65.00		X	X
370+49.32	65.00		X	X
371+05.88	-65.00		X	X
372+26.99	65.00		X	X
382+60.72	-65.00	X	X	
382+60.72	65.00	X	X	
388+65.59	65.00		X	X
388+86.90	-65.00		X	X
394+38.80	-65.00	X	X	
394+38.80	-50.00	X	X	
397+00.00	-75.00	X	X	
397+00.00	-50.00	X	X	
397+88.80	65.00	X	X	
397+88.80	80.00	X	X	
398+07.06	-75.00	X	X	
398+07.06	80.00	X	X	
398+33.06	-75.00		X	X
398+33.06	80.00		X	X
399+00.00	50.00	X	X	
399+00.00	80.00	X	X	
399+91.96	-75.00		X	X
399+91.96	50.00		X	X
406+63.80	50.00	X	X	
406+63.80	65.00	X	X	
414+00.00	65.00	X	X	
414+00.00	75.00	X	X	
418+44.73	-75.00	X	X	
418+44.73	75.00	X	X	
420+84.91	64.99	X	X	
420+84.91	74.99	X	X	
423+75.02	-75.03		X	X
424+29.52	64.96		X	X
424+60.03	98.94	X	X	
425+19.50	-65.05		X	X
425+27.87	86.52	X	X	
425+76.88	64.95		X	X
436+45.02	-100.13	X	X	
436+45.02	-65.13	X	X	
436+45.03	64.87	X	X	
436+45.03	99.87	X	X	
442+40.76	-100.15	X	X	
442+40.76	99.86	X	X	
442+69.99	-100.14	X	X	
442+70.00	-200.14	X	X	
443+44.99	74.86	X	X	
443+44.99	99.86	X	X	
443+89.99	-75.14	X	X	
443+90.00	-200.14	X	X	
449+32.63	-100.12	X	X	
449+32.63	-75.12	X	X	
449+55.64	74.88	X	X	
449+55.64	99.88	X	X	
455+39.23	99.91	X	X	
455+39.23	100.42	X	X	
455+39.24	-100.09	X	X	
455+39.24	-75.09	X	X	
462+47.97	100.73	X	X	
462+96.86	-75.06	X	X	
463+56.68	64.94		X	X
463+56.97	-75.06		X	X
464+22.42	64.94		X	X
464+47.32	64.94	X	X	
464+47.71	74.94	X	X	
476+27.66	74.90	X	X	
476+36.03	259.90	X	X	
476+45.73	-75.10	X	X	
476+48.23	-220.10	X	X	
477+54.53	99.90	X	X	
477+55.27	259.90	X	X	
478+72.06	-100.10	X	X	
478+75.33	-220.10	X	X	
486+45.76	-75.10	X	X	
486+46.18	-100.10	X	X	
Total		**188**	**246**	**58**

Alignment Monuments

Station	Offset	Description	Monument per Standard D-720-1	Point Number
0+00.00	0.00	POT - Intersection	X	102
26+42.03	0.00	QTR COR	X	306
52+83.51	0.00	SEC COR	X	103
79+22.73	0.00	QTR COR	X	305
105+61.95	0.00	SEC COR	X	101
132+01.45	0.00	QTR COR	X	304
144+49.23	0.00	PC	X	
147+24.80	1.33	PI - C11	X	
150+00.37	0.00	PT	X	
158+10.03	0.00	PC	X	
158+41.19	-0.11	SEC - TAN XING		
162+64.84	-22.88	PI - C1015	X	
164+29.61	-9.28	SEC - TAN XING		
167+19.64	0.00	PT	X	
184+51.79	0.00	TS	X	
185+14.25	0.03	QTR - TAN XING		
189+89.14	12.75	PI - C19	X	
195+26.48	0.00	ST	X	
210+41.10	0.00	PC	X	
211+65.86	0.34	SEC - TAN XING		
215+80.25	6.34	PI - C22	X	
221+19.40	0.00	PT	X	
222+34.66	0.00	TS	X	
224+80.57	2.15	PI - C25	X	
227+26.48	0.00	ST	X	
231+92.92	0.00	TS	X	
236+20.39	-9.66	PI - C28	X	
238+04.52	-2.08	QTR - TAN XING		
240+47.86	0.00	ST	X	
264+30.81	0.00	TWP XING		
290+83.03	0.00	QTR XING	X	87
317+40.62	0.00	SEC XING		
343+87.42	0.00	QTR XING	X	226
356+92.46	0.00	TS	X	
361+68.75	-23.68	PI - C38	X	
366+45.05	0.00	ST	X	
370+77.60	0.00	SEC XING		85
382+60.72	0.00	TS	X	
388+69.78	38.50	QTR - TAN XING		
390+33.89	70.48	PI - C166	X	166
398+07.06	0.00	ST	X	
398+33.06	0.00	QTR XING		
399+91.96	0.00	QTR XING		
418+44.73	0.00	TS	X	
424+76.26	0.00	SEC XING		
430+42.92	-315.20	PI - C500	X	158
442+40.76	0.00	ST	X	
462+96.86	0.00	TS	X	
463+56.82	0.04	SEC - TAN XING		
464+23.01	0.39	QTR - TAN XING		
476+81.76	289.89	PI - C501	X	
489+19.50	0.00	PT	X	
Total			**52**	

This document was originally issued and sealed by William Doerr, Registration Number PE- 7113, on 12/04/15 and the original document is stored at the North Dakota Department of Transportation

Right of Way Markers

ND 58

Jct 200 to Jct 1804

STATE	PROJECT NO.	SECTION NO.	SHEET NO.
ND	SOIB-7-058(013)000	20	1

Notes:

1. Actual HMA paving and aggregate base course locations may vary in the field, as approved by the Engineer.
2. Quantity totals have been included in the bid items of the "Estimate of Quantities" of the plans.
3. Aggregate base course has been provided in the quantities to fill in around the radii. This material will be required when sloughs are steeper than 4:1, see B-B.

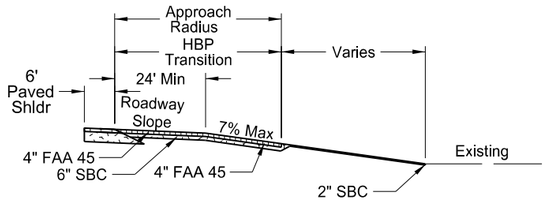

(1) Gravel Section Line, County Road, or Street Approach
Profile View

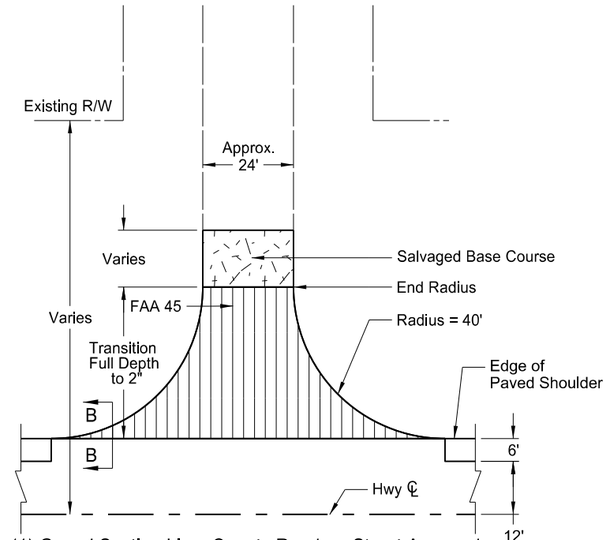

(1) Gravel Section Line, County Road, or Street Approach

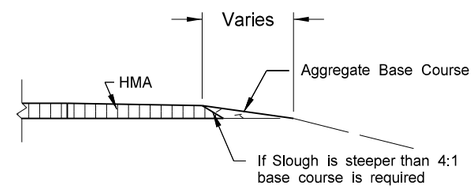

Section B-B

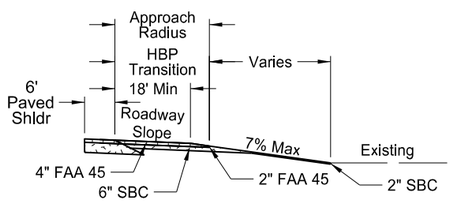

(2) Gravel Private Drive Approach
Profile View

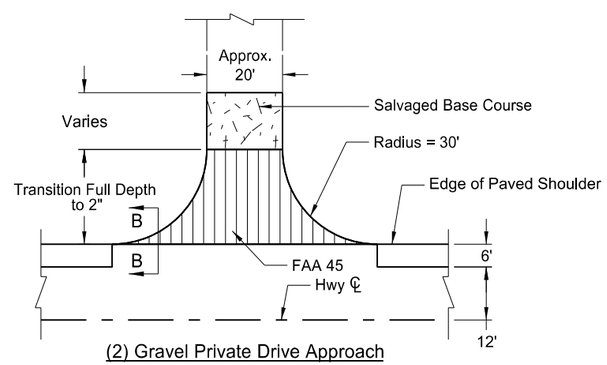

(2) Gravel Private Drive Approach

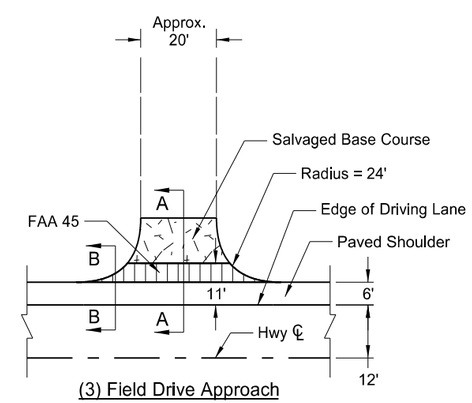

(3) Field Drive Approach

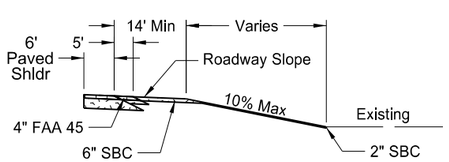

(3) Field Drive Approach
Profile View

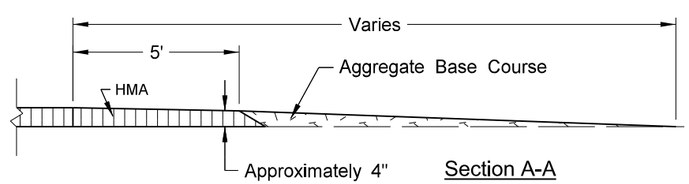

Section A-A

This document was originally issued and sealed by William Doerr, Registration Number PE-7113, on 12/04/15 and the original document is stored at the North Dakota Department of Transportation

Approach Paving Details

ND 58

Jct 200 to Jct 1804

STATE	PROJECT NO.	SECTION NO.	SHEET NO.
ND	SOIB-7-058(013)000	20	2

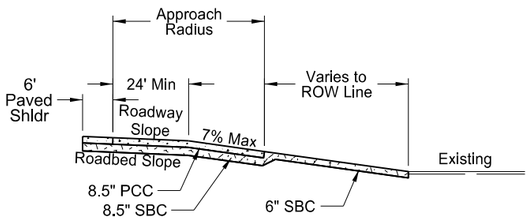

(4) PCC Paved Section Line, County Road, or Street Approach
Profile View

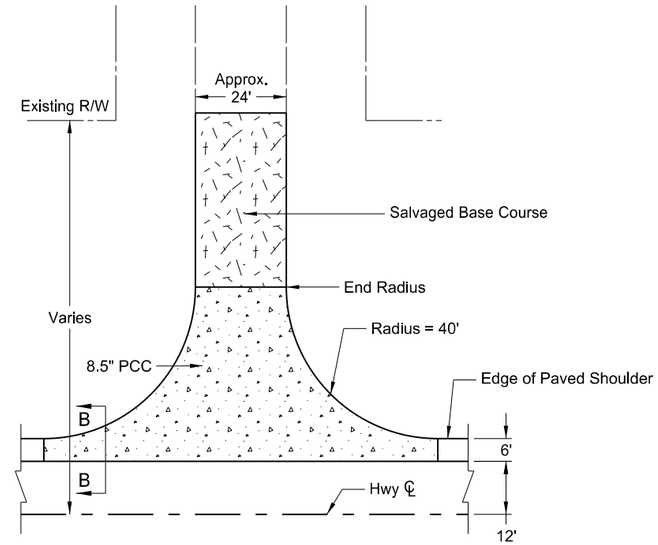

(4) PCC Paved Section Line, County Road, or Street Approach

Notes:

1. Actual PCC paving and aggregate base course locations may vary in the field, as approved by the Engineer.
2. Quantity totals have been included in the bid items of the "Estimate of Quantities" of the plans.
3. Aggregate base course has been provided in the quantities to fill in around the radii. This material will be required when sloughs are steeper than 4:1, see B-B.

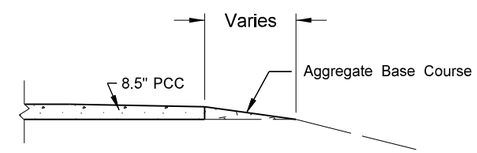

Section B-B

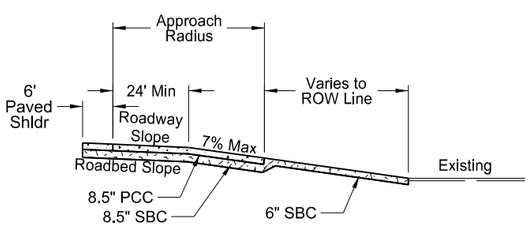

(5) PCC Paved Section Line, County Road, or Street Approach - Extra Wide
Profile View

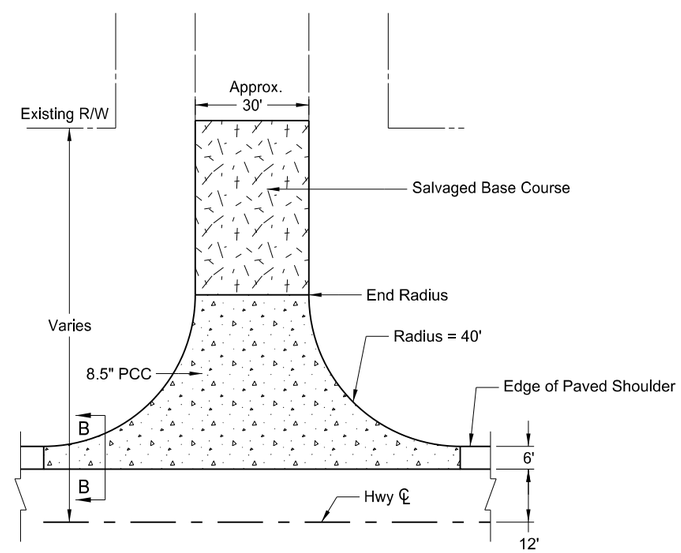

(5) PCC Paved Section Line, County Road, or Street Approach - Extra Wide

This document was originally issued and sealed by William Doerr, Registration Number PE-7113, on 12/04/15 and the original document is stored at the North Dakota Department of Transportation

Approach Paving Details

ND 58

Jct 200 to Jct 1804

STATE	PROJECT NO.	SECTION NO.	SHEET NO.
ND	SOIB-7-058(013)000	20	3

APPROACH SUMMARY

(1) Section Line - Gravel 6 Total	
Sta.	Lt./ Rt.
52+84	Rt
105+67	Rt
158+35	Rt
290+93	Lt
290+93	Rt
424+34	Lt

(2) Private Drive - Gravel 25 Total	
Sta.	Lt./ Rt.
37+45	Rt
40+99	Rt
58+71	Lt
62+66	Lt
64+27	Lt
77+27	Rt
79+30	Rt
86+01	Rt
91+52	Rt
92+43	Lt
127+09	Lt
185+38	Lt
196+77	Rt
198+74	Rt
200+78	Rt
228+90	Rt
237+90	Lt
317+32	Rt
339+37	Lt
343+94	Rt
349+72	Lt
349+72	Rt
356+87	Lt
392+76	Lt
476+83	Rt

(3) Field Drive 48 Total	
Sta.	Lt./ Rt.
13+80	Lt
13+80	Rt
26+06	Lt
26+06	Rt
26+42	Lt
26+42	Rt
38+97	Lt
57+04	Lt
61+38	Lt
66+07	Rt
66+22	Lt
86+01	Lt
119+46	Rt
132+01	Rt
144+65	Rt
145+16	Lt
146+56	Rt
147+54	Lt
164+17	Lt
172+66	Rt
184+91	Rt
185+31	Rt
207+67	Lt
208+64	Lt
237+90	Rt
278+01	Lt
278+01	Rt
301+40	Rt
308+40	Rt
337+15	Rt
357+19	Rt
369+25	Rt
370+00	Lt
384+05	Rt
384+24	Lt
384+56	Rt
385+14	Rt
397+36	Rt
404+35	Lt
411+63	Lt
425+55	Lt
425+68	Rt
434+73	Rt
435+70	Lt
462+20	Rt
462+20	Lt
477+12	Lt
486+19	Rt

(4) 24' Conc -Paved 8 Total	
Sta.	Lt./ Rt.
25+36	Lt
52+84	Lt
79+23	Lt
105+67	Lt
211+82	Lt
264+31	Lt
264+31	Rt
317+32	Lt

(5) 30' Conc -Paved 2 Total	
Sta.	Lt./ Rt.
211+82	Rt
362+46	Lt

BASIS OF ESTIMATE		1	2	3	4	5	TOTAL
		Gravel Section Line	Gravel Private Drive	Field Drive	Concrete Section Line	30' Concrete Section Line	
NUMBER OF LOCATIONS		6	25	48	8	2	
DESCRIPTION	UNIT	AVERAGE	AVERAGE	AVERAGE	AVERAGE	AVERAGE	
REMOVAL OF BITUMINOUS SURFACING	TON	50.67	28.15	28.15	50.67	63.33	2,891
SALVAGED BASE COURSE	TON	72.39	68.57	44.21	180.13	212.66	6,137
TACK COAT	GAL	9.4	6.5	1.5	NA	NA	292
SUPERPAVE FAA 45	TON	40.60	27.04	5.86	NA	NA	1,201
PG 64-34 ASPHALT CEMENT	TON	2.40	1.60	0.35	NA	NA	71
8.5IN NON-REINF CONCRETE PVMT CL AE-DOWELED	SY	NA	NA	NA	321.63	356.3	3,286

This document was originally issued and sealed by William Doerr, Registration Number PE- 7113, on 12/04/15 and the original document is stored at the North Dakota Department of Transportation

Approach Summary

ND 58

Jct 200 to Jct 1804

STATE	PROJECT NO.	SECTION NO.	SHEET NO.
ND	SOIB-7-058(013)000	20	4

SPEC	CODE	BID ITEM	QUANTITY	UNIT
202	0135	REMOVAL OF BITUMINOUS SURFACING		
		4+60 TO 11+00	1,892	TON
203	0101	COMMON EXCAVATION-TYPE A		
		4+60 TO 11+00	28	CY
		(Quantity is included in earthwork summary)		

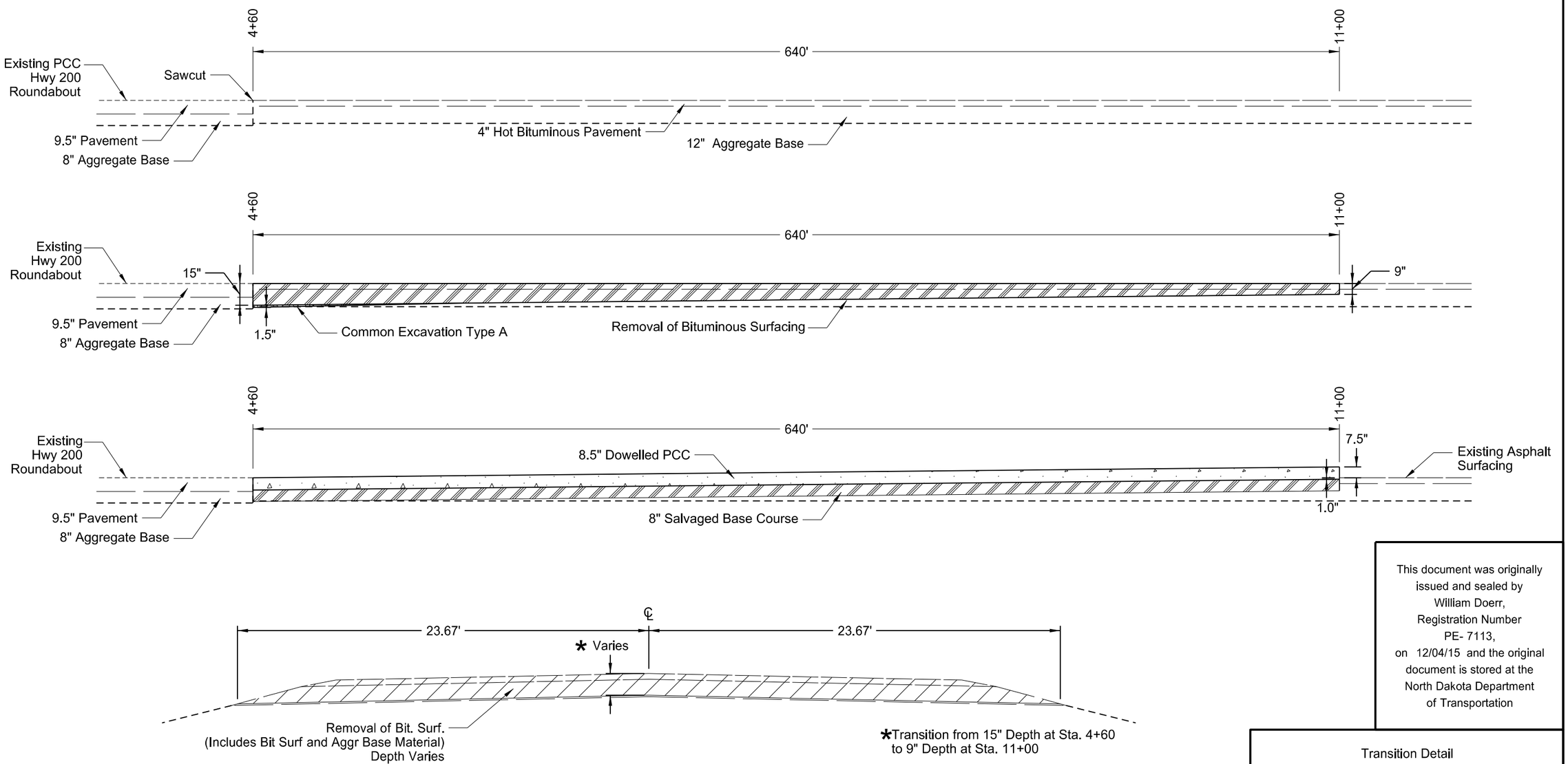

4+60 to 11+00

This document was originally issued and sealed by William Doerr, Registration Number PE- 7113, on 12/04/15 and the original document is stored at the North Dakota Department of Transportation

Transition Detail

ND 58

Jct 200 to Jct 1804

STATE	PROJECT NO.	SECTION NO.	SHEET NO.
ND	SOIB-7-058(013)000	20	5

SPEC	CODE	BID ITEM	QUANTITY	UNIT
411	0105	MILLING PAVEMENT SURFACE		
		440+23 to 443+23	400	SY
		456+21 to 459+21	400	SY
		487+00 to 490+00	400	SY

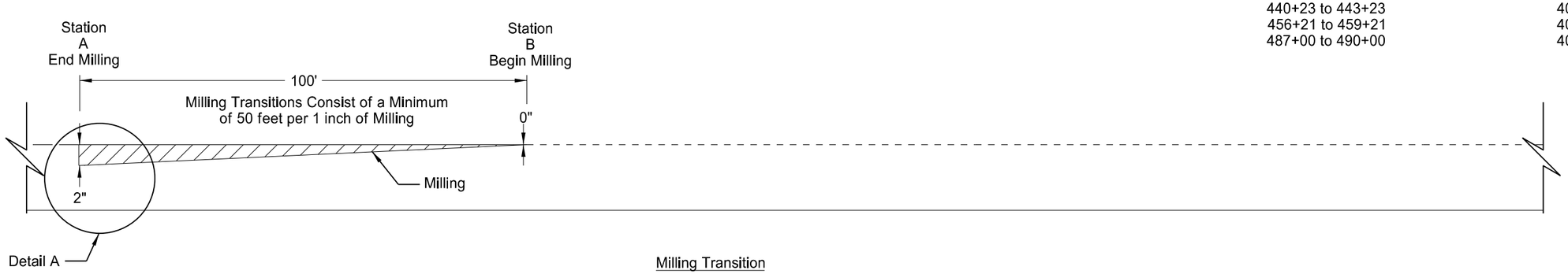

Milling Transition

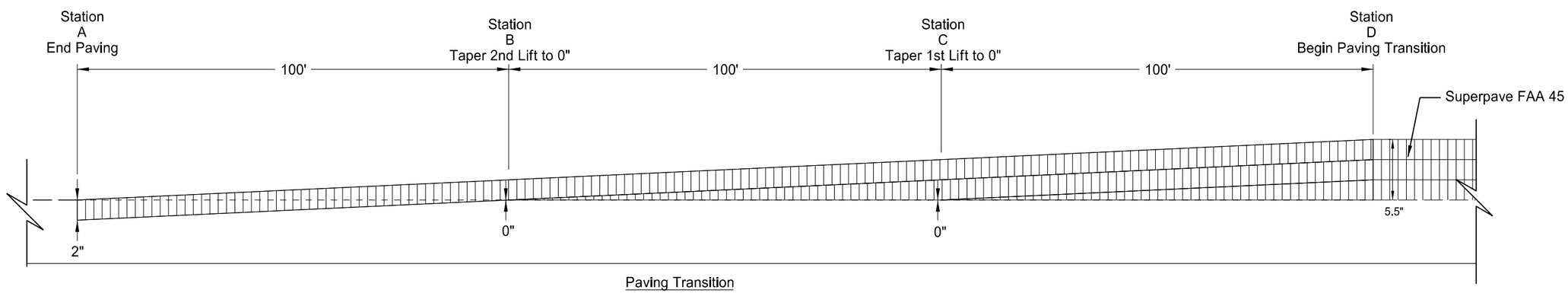

Paving Transition

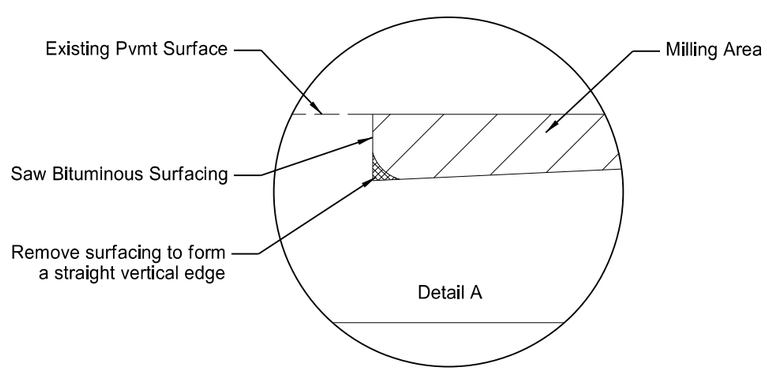

	Station A	Station B	Station C	Station D
Bridge End Milling	443+23	442+23	441+23	440+23
Bridge End Milling	456+21	457+21	458+21	459+21
End of Project Milling	490+00	489+00	488+00	487+00

This document was originally issued and sealed by William Doerr, Registration Number PE- 7113, on 12/04/15 and the original document is stored at the North Dakota Department of Transportation

Milling and Paving Transitions

ND 58

Jct 200 to Jct 1804

STATE	PROJECT NO.	SECTION NO.	SHEET NO.
ND	SOIB-7-058(013)000	20	6

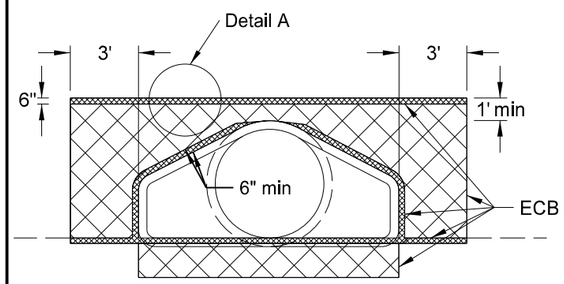

FRONT VIEW

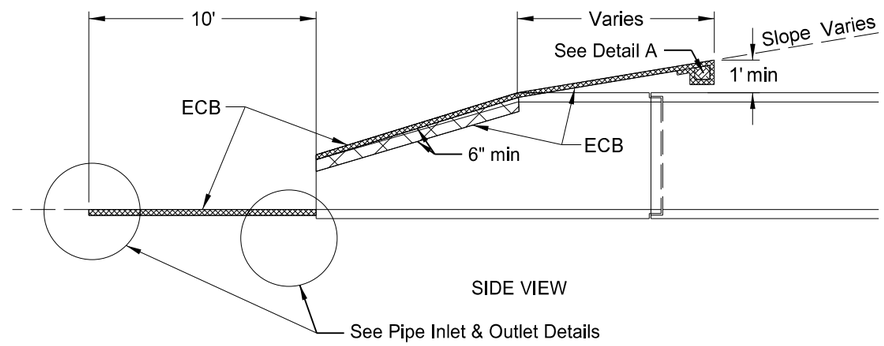

SIDE VIEW

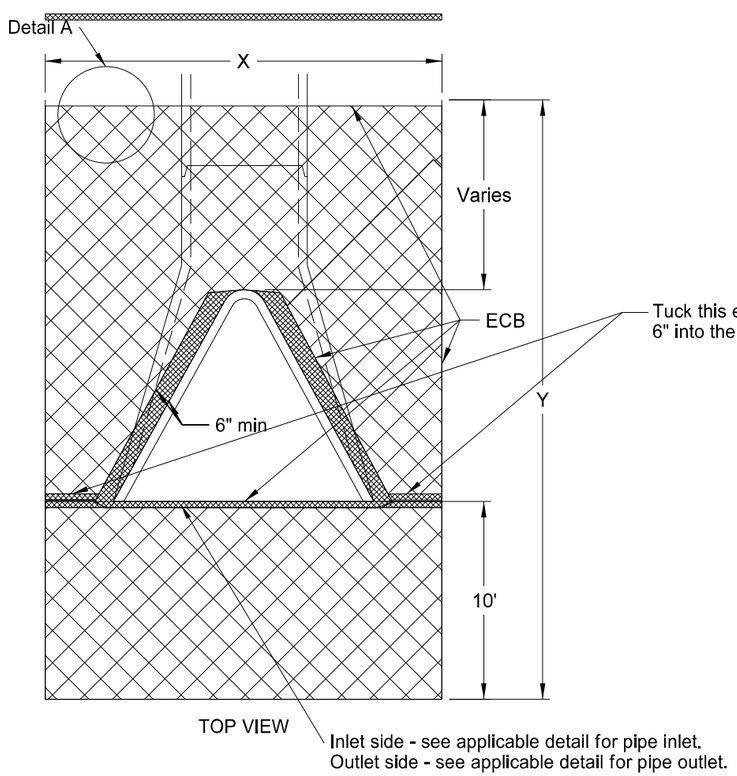

TOP VIEW

NOTE: Tuck the ECB a minimum of 6" into the embankment (against the flared end section) around the opening of the flared end section.

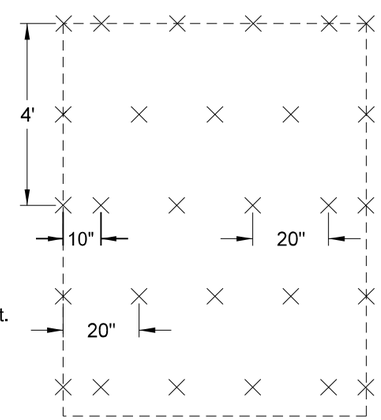

STAPLE PATTERN

CENTERLINE CULVERTS				
DIA	X	Y	Surface area to be protected	ECB
In	Ft	Ft	SF	SY
24	10.5	27.6	172.1	20
27	11.0	18.0	182.3	21
30	11.6	18.5	195.1	22
36	12.7	19.2	216.7	24
42	13.3	19.2	225.2	25
48	13.8	20.0	238.0	27
54	14.5	19.5	244.7	28
60	15.0	19.0	248.3	28
66	15.6	20.0	264.5	30
72	16.2	20.5	276.8	31

Note: Quantities based on 4:1 slope.

Erosion Control Blanket (ECB)								
Location to be Protected	Culvert Type Appr/CL	Pipe Diam. (Inch)	No	Unit Quantity	Total Quantity			
					Type 1	Type 2	Type 3	Type 4
Station				(SY)	(SY)	(SY)	(SY)	(SY)
24+31 Rt	CL	24	1	20	0	0	20	0
26+81 Rt	CL	24	1	20	0	0	20	0
49+52 Rt	CL	36	1	24	0	0	24	0
90+99 Lt	CL	36	1	24	0	0	24	0
198+23 Lt	CL	24	1	20	0	0	20	0
198+37 Lt	CL	24	1	20	0	0	20	0
219+40 Lt & Rt	CL	36	2	24	0	0	48	0
240+21 Lt	CL	30	1	22	0	0	22	0
248+73 Lt	CL	24	1	20	0	0	20	0
301+96 Lt	CL	24	1	20	0	0	20	0
316+91 Rt	CL	24	1	20	0	0	20	0
360+64 Lt	CL	72	1	31	0	0	31	0
369+10 Lt & Rt	CL	30	2	22	0	0	44	0
369+18 Lt & Rt	CL	30	2	22	0	0	44	0
384+96 Lt	CL	60	1	28	0	0	28	0
398+14 Lt & Rt	CL	60	2	28	0	0	56	0
Total (SYs)					0	0	461	0

This document was originally issued and sealed by William Doerr, Registration Number PE- 7113, on 12/04/15 and the original document is stored at the North Dakota Department of Transportation

Erosion Control at Culvert Flared End Sections

ND 58

Jct 200 to Jct 1804

STATE	PROJECT NO.	SECTION NO.	SHEET NO.
ND	SOIB-7-058(013)000	20	7

Riprap Dimensions						
Culvert Diameter (inches)	L (feet)	W_1 (feet)	W_2 (feet)	Riprap Depth, D (feet)	RR Fabric (SY)	Riprap (CY)
24	9	6	12	2	26	10
30	12	8	16	2	39	16
36	15	9	19	2	50	22
42	18	11	23	2	63	31
48	19	12	25	2	73	33
60	21	15	29	2	89	47
72	24	18	34	2	106	58

Location of Surface Area to be Protected		Culvert Diameter (inches)	RR Fabric (SY)	Riprap (CY)
Station				
90+99	Rt	36	50	22
198+23	Rt	24	26	10
198+37	Rt	24	26	10
240+21	Rt	30	39	16
248+73	Rt	24	26	10
301+96	Rt	24	26	10
360+64	Rt	72	30	15
384+96	Rt	60	89	47
Totals			312	140

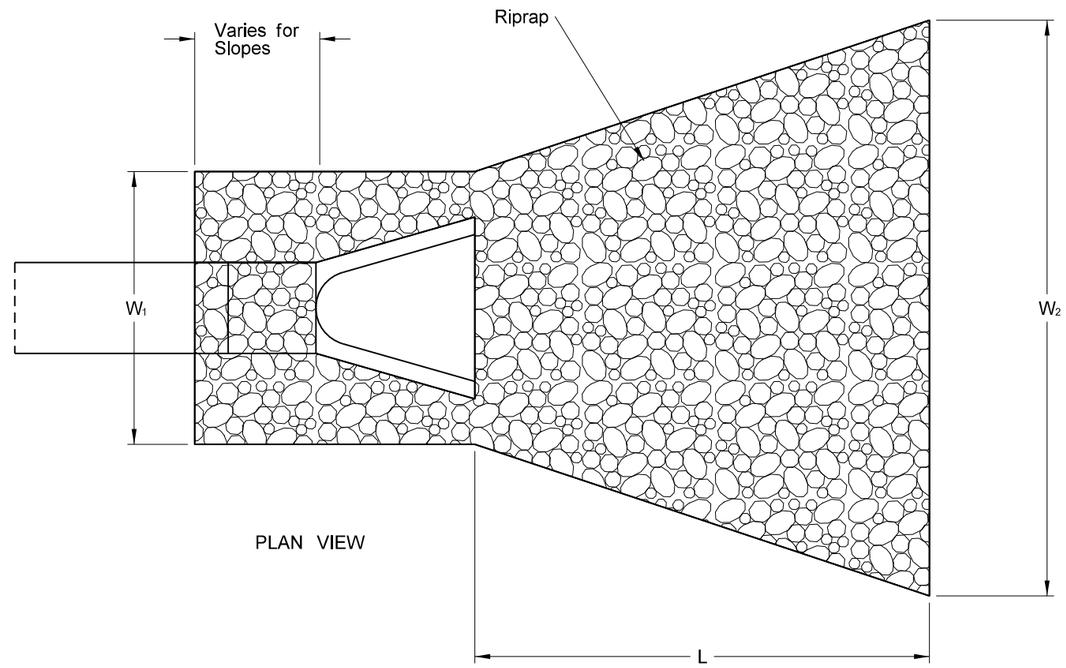

PLAN VIEW

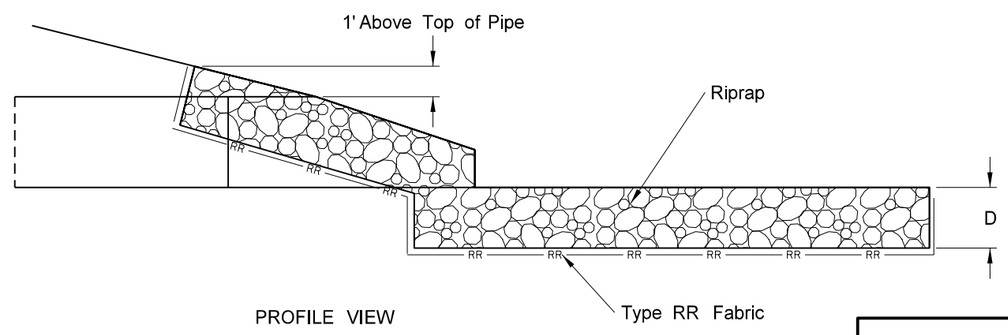

PROFILE VIEW

This document was originally issued and sealed by William Doerr, Registration Number PE- 7113, on 12/04/15 and the original document is stored at the North Dakota Department of Transportation

Culvert End Protection - Riprap

ND 58

Jct 200 to Jct 1804

STATE	PROJECT NO.	SECTION NO.	SHEET NO.
ND	SOIB-7-058(013)000	20	8

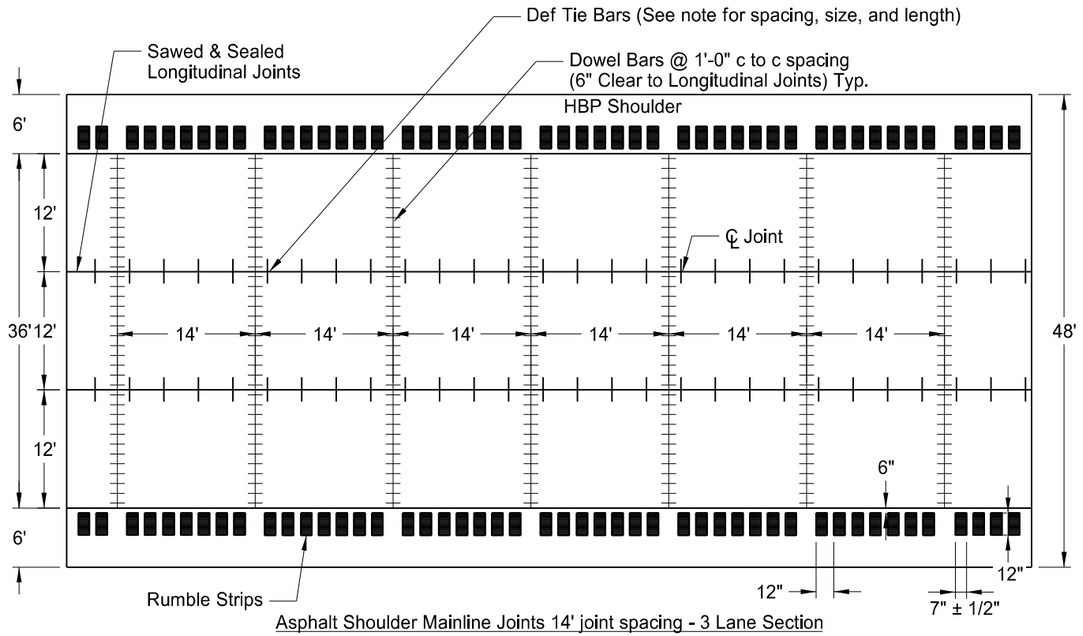

Asphalt Shoulder Mainline Joints 14' joint spacing - 3 Lane Section

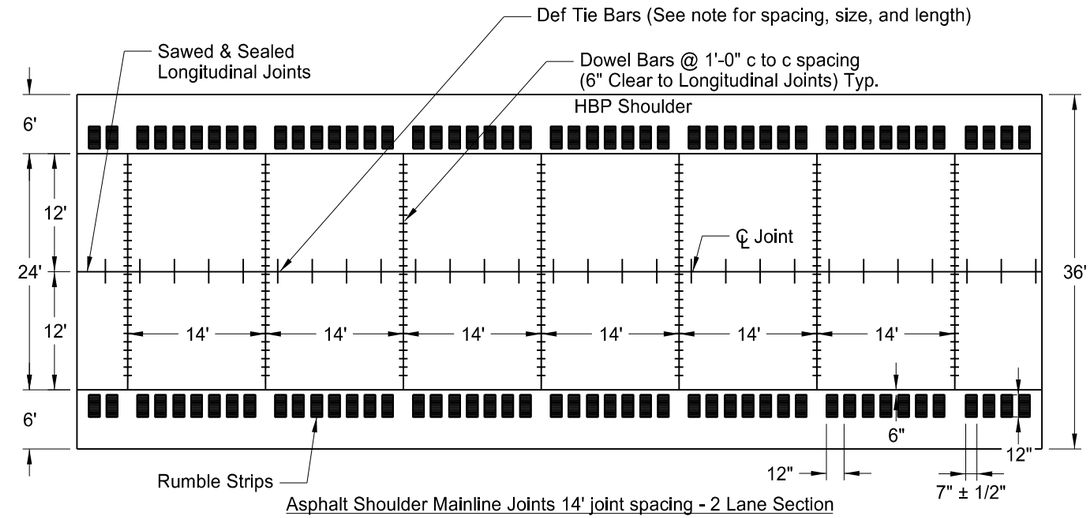

Asphalt Shoulder Mainline Joints 14' joint spacing - 2 Lane Section

Notes:

1. T = Pavement Thickness
2. Use 1¼" x 18" Dowel bars.
3. Install Rumble strips according to D-760-3.
4. Use #4 Grade 60 deformed bars for Tie bars spaced at 34 inches and placed 16 inches from each transverse joint.
5. T = 8.5"

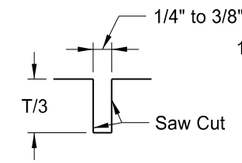

Joint Sawing Detail

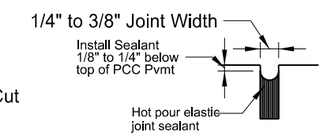

Joint Sealing Detail

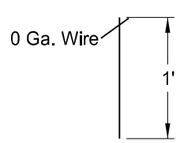

Steel Stake
4/Unit

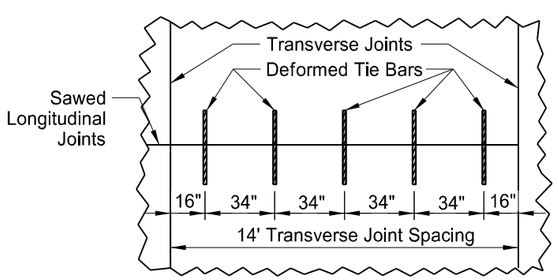

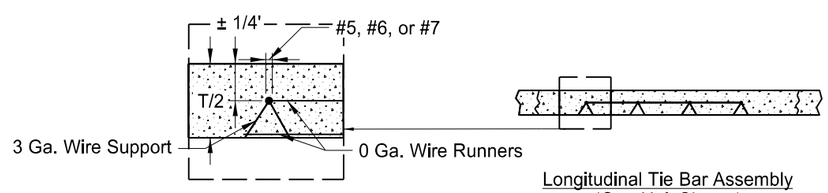

Longitudinal Tie Bar Assembly
(One Unit Shown)

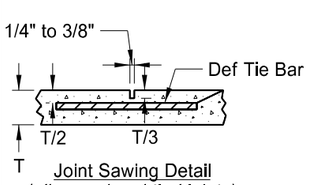

Joint Sawing Detail
(all sawed and tied joints)

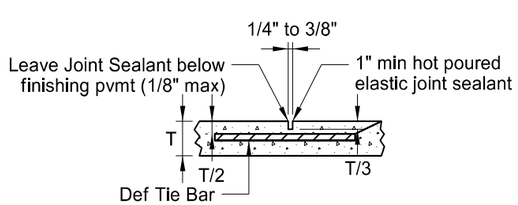

Joint Sealing Detail (all sawed and tied joints)
*Width requirement for top 1" only. Bottom portion of saw cut may be narrower.

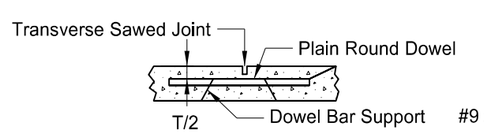

Doweled Transverse Joint

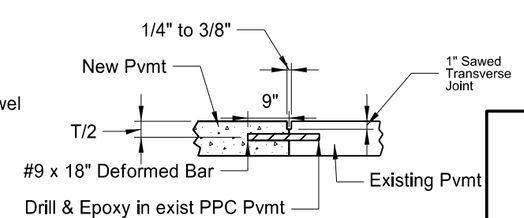

Deformed Bar Installation (2'-0" c to c)
(Transverse Joints)

This document was originally issued and sealed by William Doerr, Registration Number PE- 7113, on 12/04/15 and the original document is stored at the North Dakota Department of Transportation

PCC Pavement Joints

ND 58

Jct 200 to Jct 1804

STATE	PROJECT NO.	SECTION NO.	SHEET NO.
ND	SOIB-7-058(013)000	20	9

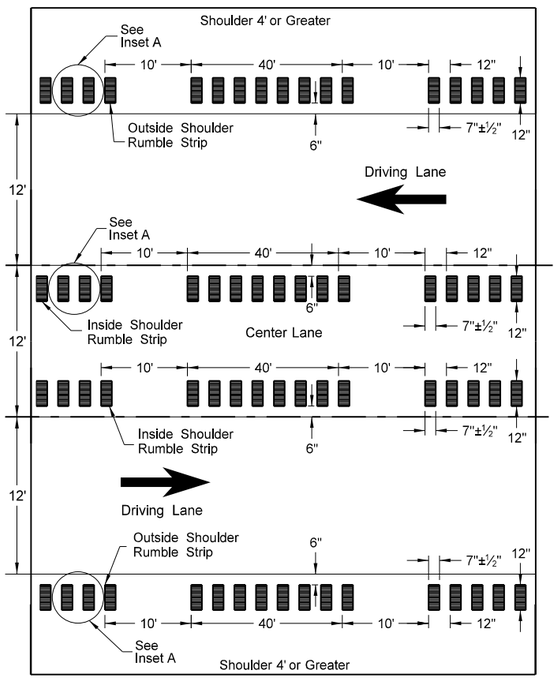

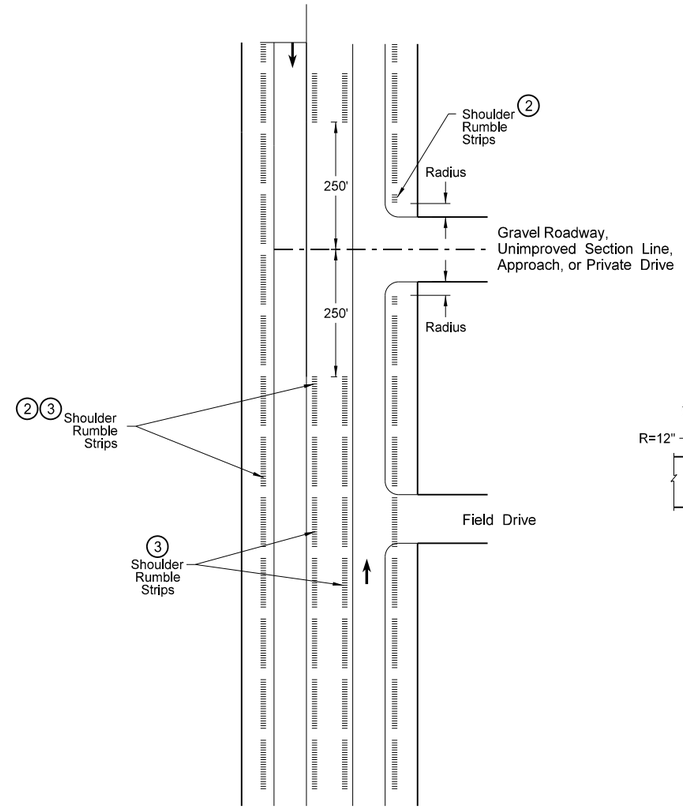

Entrance Roadways

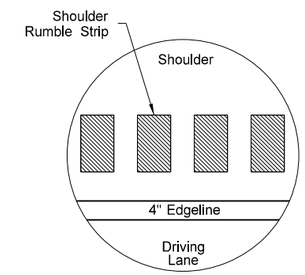

Inset A - Inside/Outside Shoulder Rumble Strips

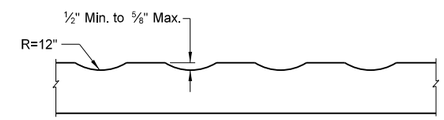

Profile of Shoudler Rumble Strips

Notes:

1. Any changes to rumble strip spacing and dimensions shall be approved the Engineer.
2. Discontinue outside shoulder rumble strips through the entire length of right turn lanes and 100' before right turn lane tapers. Discontinue outside shoulder rumble strips at the radius point of a gravel roadway, unimproved section line, approach or private driveway.
3. Discontinue inside shoulder rumble strips (same direction of travel) through the entire length of left turn lanes & 100' before left turn lane tapers. Discontinue inside shoulder rumble strips 250' from the centerline of a paved or gravel roadway, section line, approach or private drive.
4. Refer to Section 120 for Turn Lane and Taper Lengths.
5. Refer to Section 10 for Quantities.

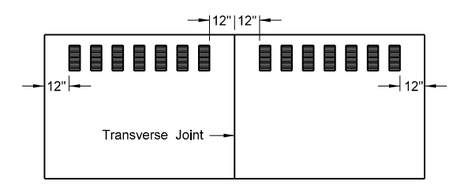

Discontinue shoulder rumble strips approx. 12" on both sides of PCC transverse joint

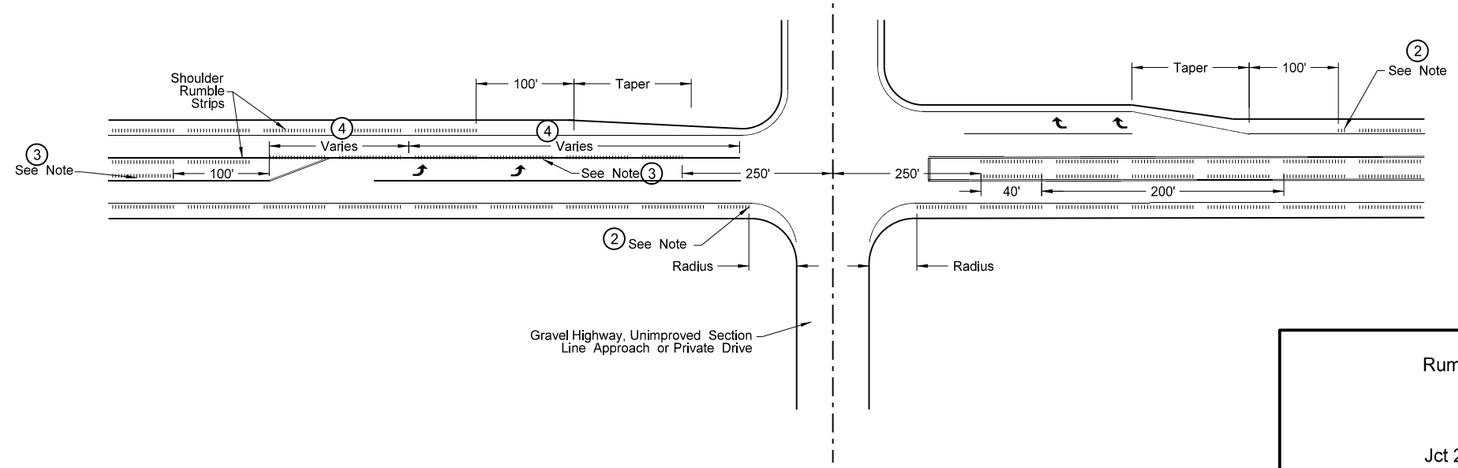

Intersection

This document was originally issued and sealed by William Doerr, Registration Number PE-7113, on 12/04/15 and the original document is stored at the North Dakota Department of Transportation

Rumble Strip Detail

ND 58

Jct 200 to Jct 1804

STATE	PROJECT NO.	SECTION NO.	SHEET NO.
ND	SOIB-7-058(013)000	20	10

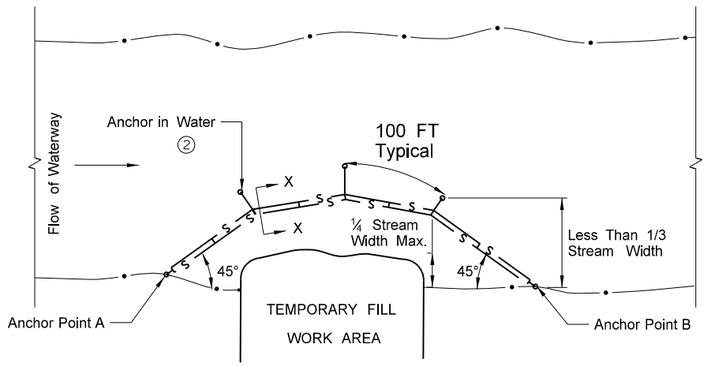

PLAN VIEW

FLOTATION SILT CURTAIN - TYPE WORK AREA

FOR CONTAINING OVERFLOWS FROM WEIRS, STANDPIPES, SETTLING PONDS

DESIGN GUIDELINES:

WHEN TEMPORARY FILL ENCROACHES LESS THAN 1/4 OF THE WIDTH OF STREAM.
MAXIMUM WATER VELOCITY: 5 FT./SEC.
MAXIMUM WATER DEPTH: 11 FT.

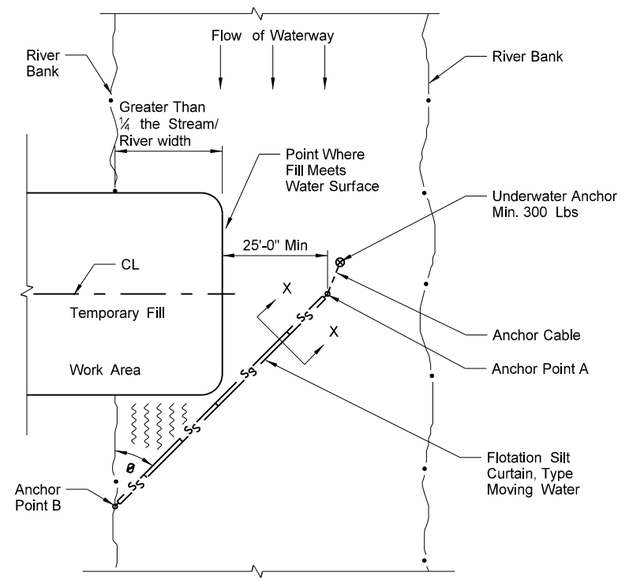

∠ θ	RIVER VELOCITY
45°	SLOW, LESS THAN 3 FT./SEC.
35°	MODERATE, 3 - 5 FT./SEC.

PLAN VIEW

FLOTATION SILT CURTAIN - TYPE MOVING WATER

DESIGN GUIDELINES:

WHEN TEMPORARY FILL ENCROACHES MORE THAN 1/4 BUT LESS THAN 1/3 WIDTH OF THE STREAM.
MAXIMUM WATER DEPTH: 11 FT.①
MINIMUM WATER DEPTH: 3 FT.
MAXIMUM WATER VELOCITY: 5 FT./SEC.

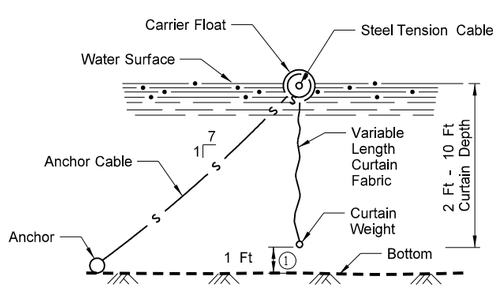

SECTION X-X
FLOTATION SILT CURTAINS

Notes:

① Curtain 1 FT from Bottom

② 100 FT Max Spacing Between Anchors, Min 40 LBS

③ Use enough Anchors to Hold Silt Curtain in Place

This document was originally issued and sealed by William Doerr, Registration Number PE-7113, on 12/04/15 and the original document is stored at the North Dakota Department of Transportation

Flotation Silt Curtain

ND 58

Jct 200 to Jct 1804

STATE	PROJECT NO.	SECTION NO.	SHEET NO.
ND	SOIB-7-058(013)000	20	11

Notes:
1. Locations are approximate. Exact Locations will be determined in the field, as approved by the Engineer.
2. A minimum width of 2 panels (28 feet) will be required, and will only be extended in increments of 1 panel (14 feet).
3. All extra costs associated with the Concrete Paving leave outs are to be included in the price bid for "8.5 IN NON-REINF CONCRETE PVMT CL AE-DOWELED"

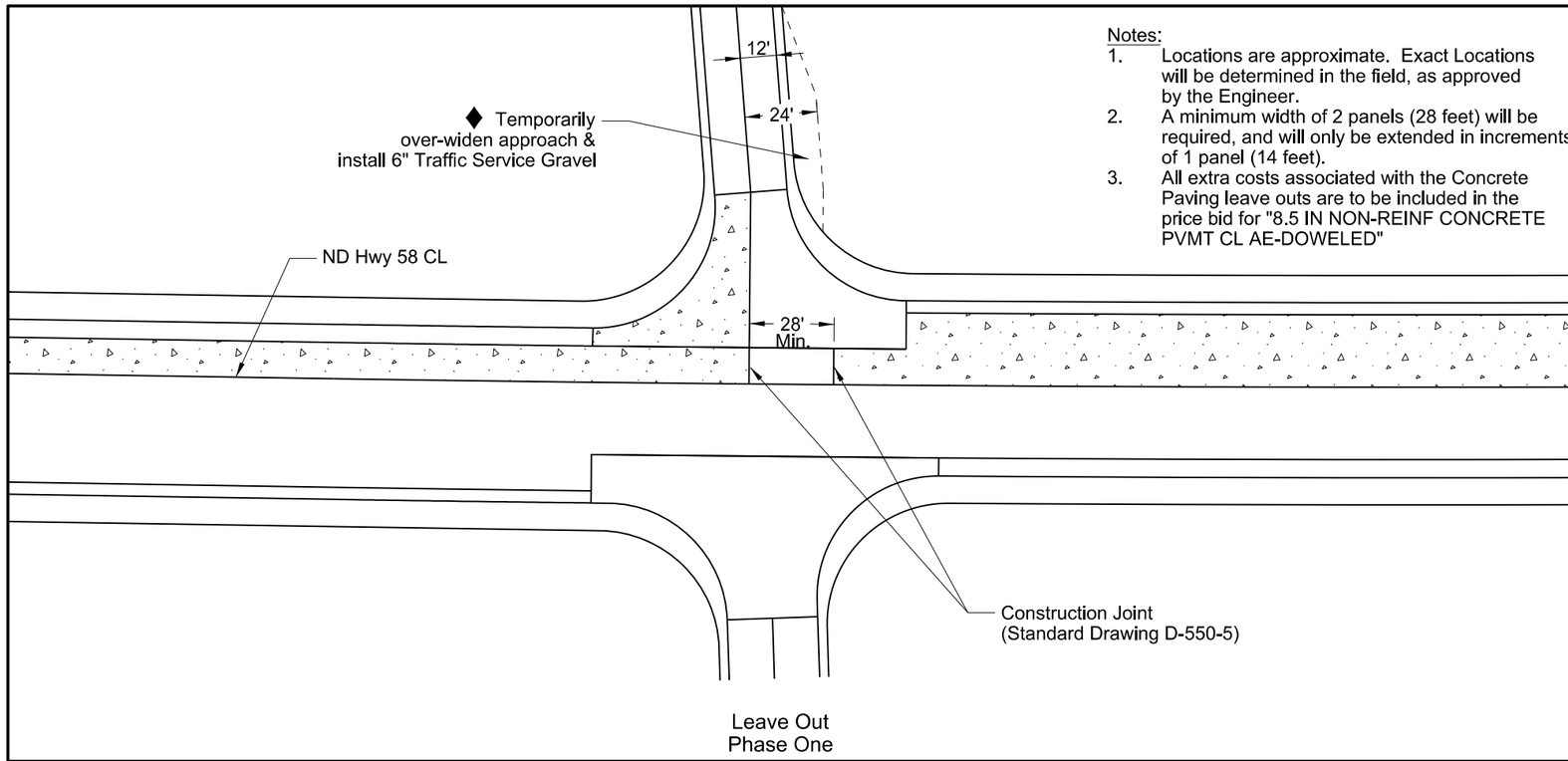

Leave Out
Phase One

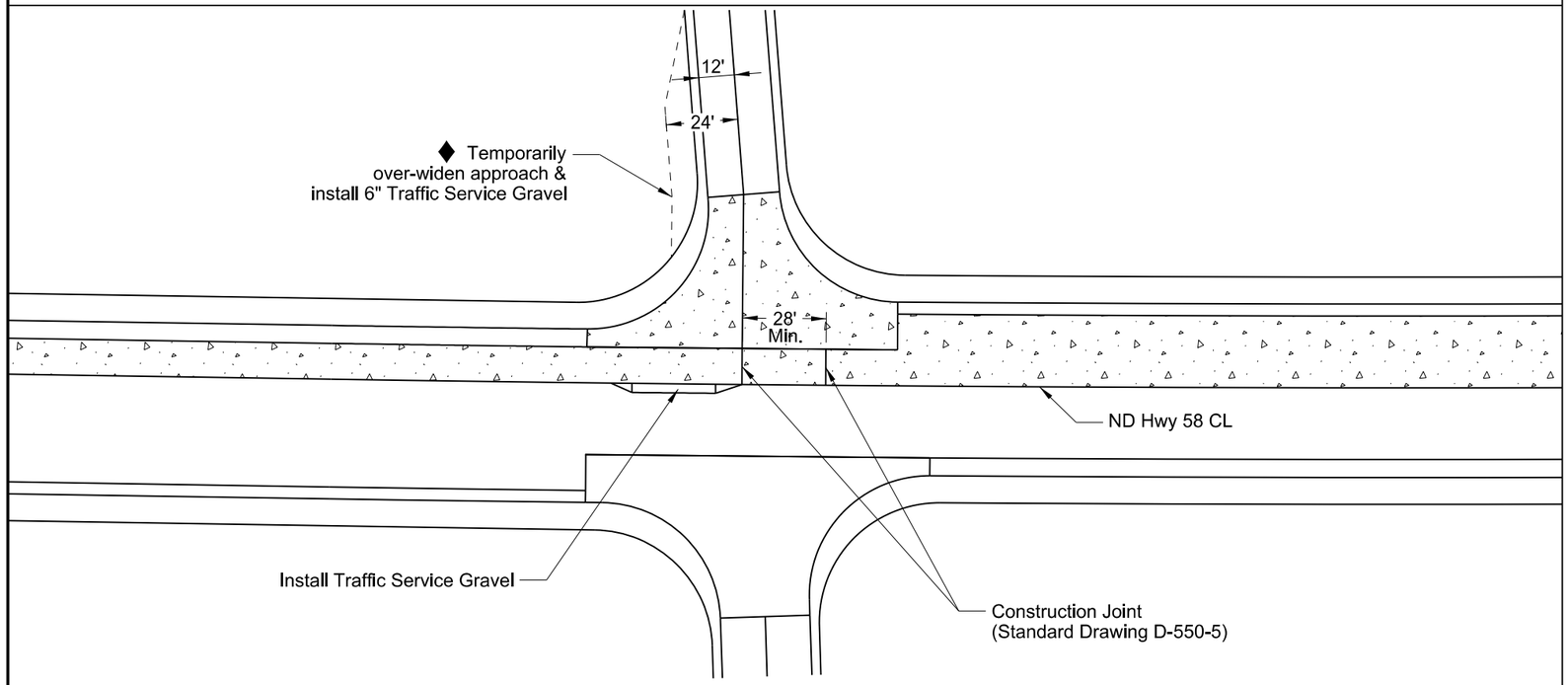

Leave Out
Phase Two

♦ Intersection Approach Open to Two-Way Traffic (require temporary widening)

Private DriveSta.	25+36	Lt
Section Line Sta.	52+84	Rt
Section Line Sta.	52+84	Lt
Section Line Sta.	105+67	Rt
Section Line Sta.	105+67	Lt
Section Line Sta.	158+35	Rt
Section Line Sta.	211+82	Lt
Section Line Sta.	211+82	Rt
Section Line Sta.	264+31	Lt
Section Line Sta.	264+31	Rt
Section Line Sta.	290+93	Lt
Section Line Sta.	290+93	Rt
Section Line Sta.	317+32	Lt
Section Line Sta.	362+46	Lt
Section Line Sta.	424+34	Lt

Intersection Approach Open to One-Way Traffic (no temporary widening required)

Private DriveSta.	37+45	Rt
Private DriveSta.	40+99	Rt
Private DriveSta.	58+71	Lt
Private DriveSta.	62+66	Lt
Private DriveSta.	64+27	Lt
Private DriveSta.	77+27	Rt
Private DriveSta.	79+23	Lt
Private DriveSta.	79+30	Rt
Private DriveSta.	86+01	Rt
Private DriveSta.	91+52	Rt
Private DriveSta.	92+43	Lt
Private DriveSta.	127+09	Lt
Private DriveSta.	185+38	Lt
Private DriveSta.	196+77	Rt
Private DriveSta.	198+74	Rt
Private DriveSta.	200+78	Rt
Private DriveSta.	228+90	Rt
Private DriveSta.	237+90	Lt
Private DriveSta.	317+32	Rt
Private DriveSta.	339+37	Lt
Private DriveSta.	343+94	Rt
Private DriveSta.	349+72	Lt
Private DriveSta.	349+72	Rt
Private DriveSta.	356+87	Lt
Private DriveSta.	392+76	Lt
Private DriveSta.	476+83	Rt

This document was originally issued and sealed by William Doerr, Registration Number PE- 7113, on 12/04/15 and the original document is stored at the North Dakota Department of Transportation

Cocrete Paving Leave-out Detail

ND 58

Jct 200 to Jct 1804

STATE	PROJECT NO.	SECTION NO.	SHEET NO.
ND	SOIB-7-058(013)000	20	12

Missouri River Bridge					
Sta. 440+79 to Sta. 443+35					
	UNIT	LT		UNIT	RT
Tack Coat	GAL	10	Tack Coat	GAL	18
Superpave FAA 45	TON	22	Superpave FAA 45	TON	41
PG 64-34	TON	1.3	PG 64-34	TON	2.4
Salvage Base	TON	85	Salvage Base	TON	153

Note: 2" Superpave FAA 45
8" Salvaged Base Course

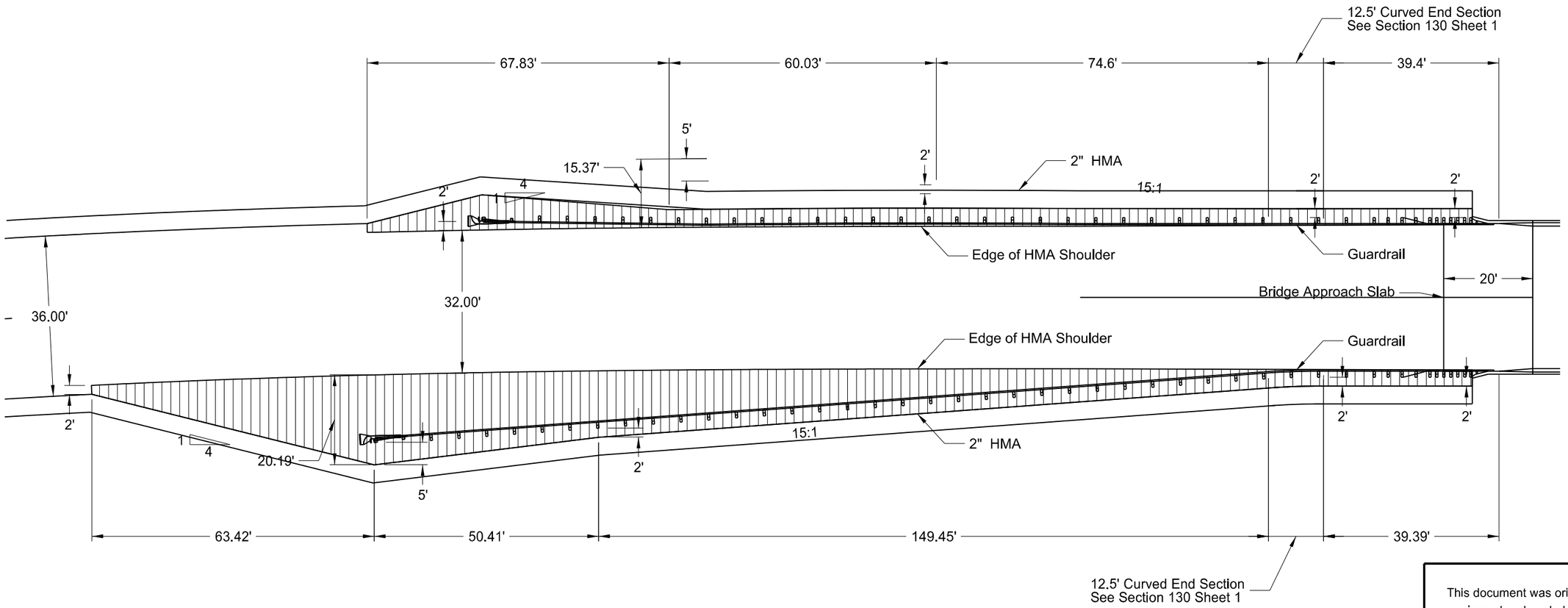

This document was originally issued and sealed by William Doerr, Registration Number PE- 7113, on 12/04/15 and the original document is stored at the North Dakota Department of Transportation

Surfacing at Bridge End With Guardrail

ND 58

Jct 200 to Jct 1804

STATE	PROJECT NO.	SECTION NO.	SHEET NO.
ND	SOIB-7-058(013)000	20	13

Missouri River Bridge					
Sta. 456+09 to Sta. 458+64					
	UNIT	LT		UNIT	RT
Tack Coat	GAL	18	Tack Coat	GAL	10
Superpave FAA 45	TON	40	Superpave FAA 45	TON	22
PG 64-34	TON	2.4	PG 64-34	TON	1.3
Salvage Base	TON	152	Salvage Base	TON	83

Note: 2" Superpave FAA 45
8" Salvaged Base Course

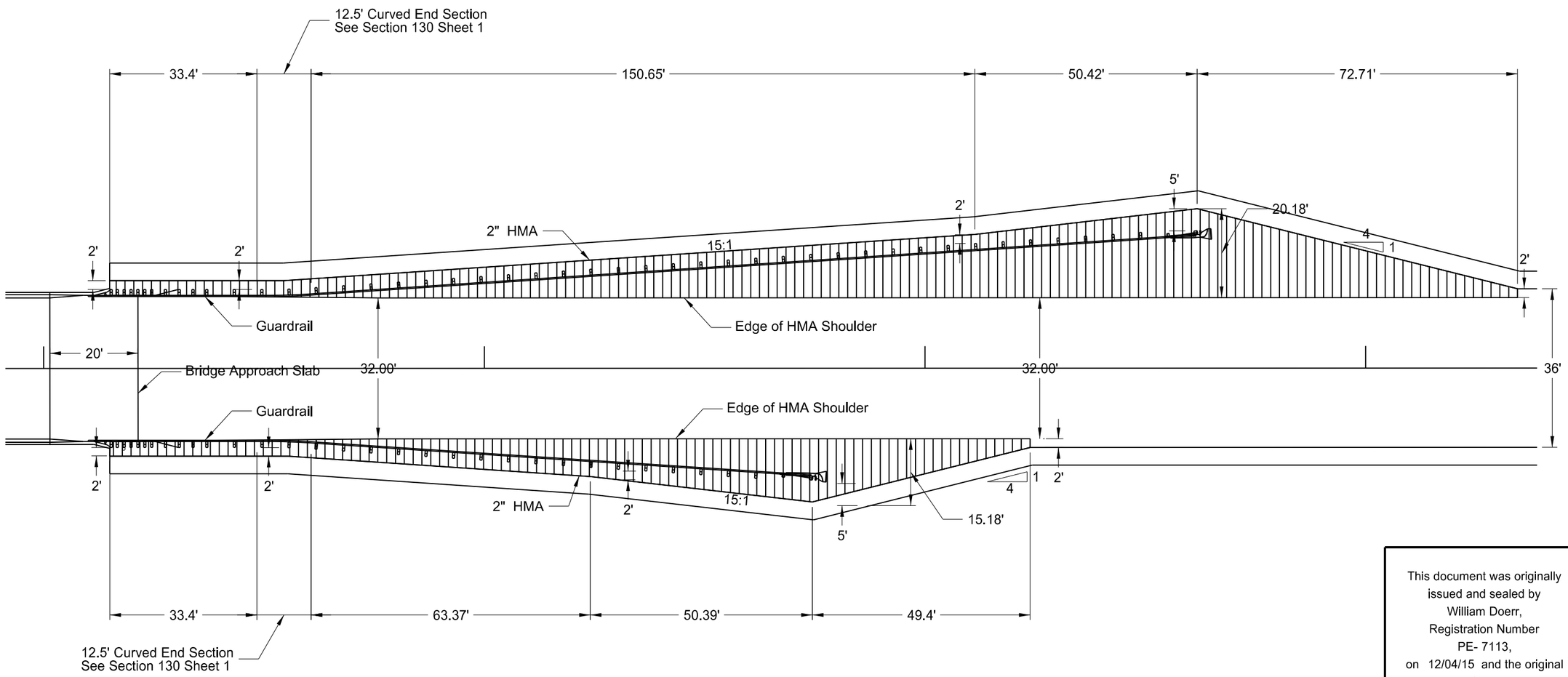

This document was originally issued and sealed by William Doerr, Registration Number PE- 7113, on 12/04/15 and the original document is stored at the North Dakota Department of Transportation

Surfacing at Bridge End With Guardrail

ND 58

Jct 200 to Jct 1804

STATE	PROJECT NO.	SECTION NO.	SHEET NO.
ND	SOIB-7-058(013)000	20	14

C1015

P.C. Station 158+10.03
P.I. Station 162+66.36
Delta = 11° 28' 46.04" (RT)
Degree = 1° 15' 43.28"
Tangent = 456.3318
Length = 909.6086
Radius = 4,540.0000
External = 22.8761
P.T. Station 167+19.64

Station	Left Slope	Right Slope
PC - 150'	-2.1	-2.1
PC - 10'	0.0	-2.1
PC	2.4	-2.4
PC + 40'	3.6	-3.6
PT - 40'	3.6	-3.6
PT	2.4	-2.4
PT + 10'	0.0	-2.1
PT + 150'	-2.1	-2.1

SCS19

T.S. Station 184+51.79
S.C. Station 186+51.79

P.C. Station 186+51.79
P.I. Station 189+89.63
Delta = 5° 03' 36.61" (LT)
Degree = 0° 45' 00.00"
Tangent = 337.5642
Length = 674.6895
Radius = 7,639.4400
External = 7.4543
P.T. Station 193+26.48

C.S. Station 193+26.48
S.T. Station 195+26.48

Station	Left Slope	Right Slope
TS - 175'	-2.1	-2.1
TS	-2.1	0.0
SC	-2.4	2.4
CS	-2.4	2.4
ST	-2.1	0.0
ST + 175'	-2.1	-2.1

SCS25

T.S. Station 222+34.66
S.C. Station 224+34.66

P.C. Station 224+34.66
P.I. Station 224+80.61
Delta = 0° 55' 05.49" (LT)
Degree = 1° 00' 00.00"
Tangent = 45.9106
Length = 91.8192
Radius = 5,729.5800
External = 0.1839
P.T. Station 225+26.48

C.S. Station 225+26.48
S.T. Station 227+26.48

Station	Left Slope	Right Slope
TS - 140'	-2.1	-2.1
TS	-2.1	0.0
SC	-3.0	3.0
CS	-3.0	3.0
ST	-2.1	0.0
ST + 140'	-2.1	-2.1

SCS28

T.S. Station 231+92.92
S.C. Station 233+92.92

P.C. Station 233+92.92
P.I. Station 236+20.76
Delta = 4° 32' 57.74" (RT)
Degree = 1° 00' 00.00"
Tangent = 227.5882
Length = 454.9373
Radius = 5,729.5800
External = 4.5183
P.T. Station 238+47.86

C.S. Station 238+47.86
S.T. Station 240+47.86

Station	Left Slope	Right Slope
TS - 140'	-2.1	-2.1
TS	-2.1	0.0
SC	-3.0	3.0
CS	-3.0	3.0
ST	-2.1	0.0
ST + 140'	-2.1	-2.1

SCS38

T.S. Station 356+92.46
S.C. Station 360+92.46

P.C. Station 360+92.46
P.I. Station 361+71.13
Delta = 4° 34' 37.12" (RT)
Degree = 2° 59' 58.75"
Tangent = 76.3324
Length = 152.5836
Radius = 1,910.0800
External = 1.5246
P.T. Station 362+45.05

C.S. Station 362+45.05
S.T. Station 366+45.05

Station	Left Slope	Right Slope
TS - 142'	-2.1	-2.1
TS	0.0	-2.1
SC	5.9	-5.9
CS	5.9	-5.9
ST	0.0	-2.1
ST + 142'	-2.1	-2.1

SCS166

T.S. Station 382+60.72
S.C. Station 385+60.72

P.C. Station 385+60.72
P.I. Station 390+44.19
Delta = 18° 55' 33.12" (LT)
Degree = 1° 59' 59.65"
Tangent = 477.5198
Length = 946.3400
Radius = 2,864.9300
External = 39.5233
P.T. Station 395+07.06

C.S. Station 395+07.06
S.T. Station 398+07.06

Station	Left Slope	Right Slope
TS - 126'	-2.1	-2.1
TS	-2.1	0.0
SC	-5.0	5.0
CS	-5.0	5.0
ST	-2.1	0.0
ST + 126'	-2.1	-2.1

SCS500

T.S. Station 418+44.73
S.C. Station 420+84.73

P.C. Station 420+84.73
P.I. Station 431+51.11
Delta = 52° 41' 08.91" (RT)
Degree = 2° 44' 59.06"
Tangent = 1,031.7609
Length = 1,916.0288
Radius = 2,083.6800
External = 241.4550
P.T. Station 440+00.76

C.S. Station 440+00.76
S.T. Station 442+40.76

Station	Left Slope	Right Slope
TS - 87'	-2.1	-2.1
TS	0.0	-2.1
SC	5.8	-5.8
CS	5.8	-5.8
ST	0.0	-2.1
ST + 87'	-2.1	-2.1

SCS501

T.S. Station 462+96.86
S.C. Station 465+96.86

P.C. Station 465+96.86
P.I. Station 477+64.98
Delta = 46° 27' 10.04" (LT)
Degree = 2° 00' 00.00"
Tangent = 1,229.4126
Length = 2,322.6394
Radius = 2,864.7890
External = 252.6573
P.T. Station 489+19.50

C.S. Station 489+19.50
S.T. Station 489+19.50

Station	Left Slope	Right Slope
TS - 126'	-2.1	-2.1
TS	-2.1	0.0
SC	-5.0	5.0
PT - 56'	-5.0	5.0
PT	-3.3	3.3
PT + XX'	-2.1	0.0
PT + 182'	-2.1	-2.1

C502

P.C. Station 493+54.82
P.I. Station 504+18.93
Delta = 49° 39' 20.54" (RT)
Degree = 2° 29' 28.04"
Tangent = 1,064.1063
Length = 1,993.3078
Radius = 2,300.0000
External = 234.2301
P.T. Station 513+48.13

Station	Left Slope	Right Slope
PC - 195'	-2.1	-2.1
PC - 55'	0.0	-2.1
PC	3.7	-3.7
PC + 63'	5.6	-5.6
PT - 63'	5.6	-5.6
PT	3.7	-3.7

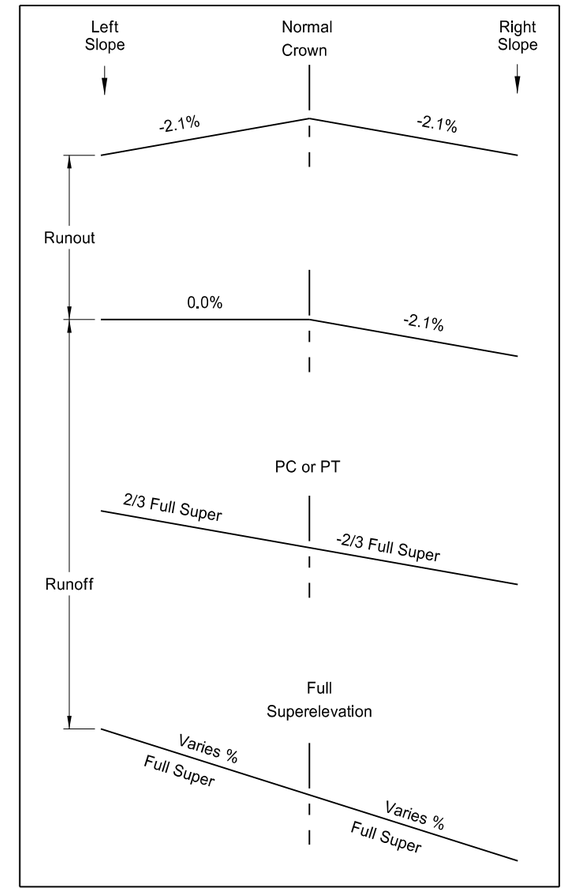

This document was originally issued and sealed by William Doerr, Registration Number PE- 7113, on 12/04/15 and the original document is stored at the North Dakota Department of Transportation

Superelevation Table

ND 58

Jct 200 to Jct 1804

Note: Calculations based on AASHTO method five. A design speed of 65 mph and maximum superelevation of 6% were used.

STATE	PROJECT NO.	SECTION NO.	SHEET NO.
ND	SOIB-7-058(013)000	20	15

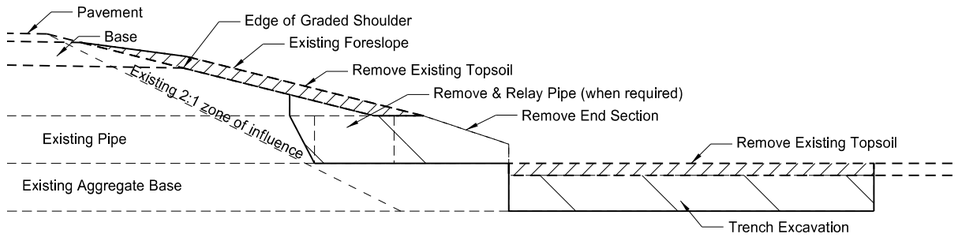

Removal Section

Cross Section View

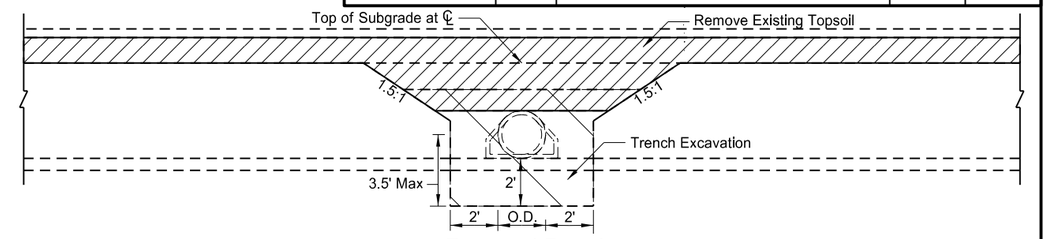

Removal Detail

Side View

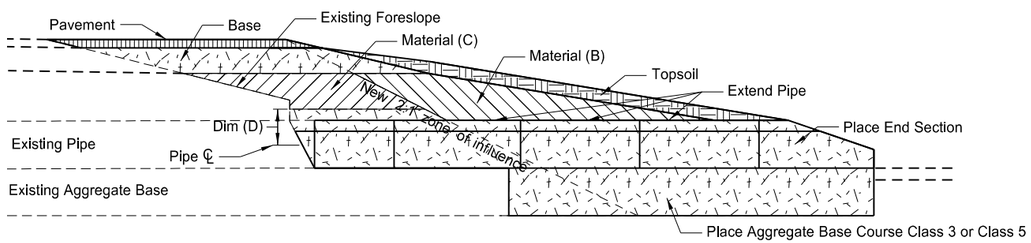

Proposed Section

Cross Section View

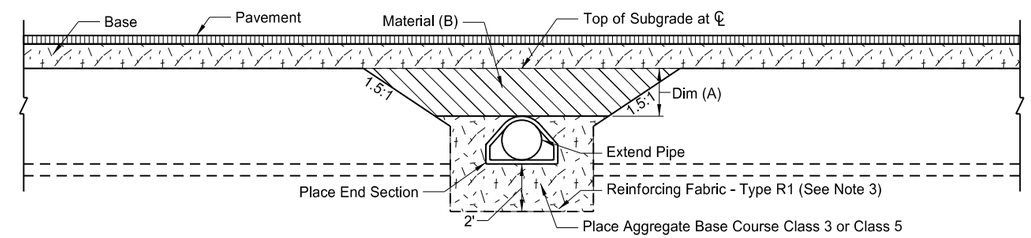

Backfill Detail

Side View (Topsoil not shown)

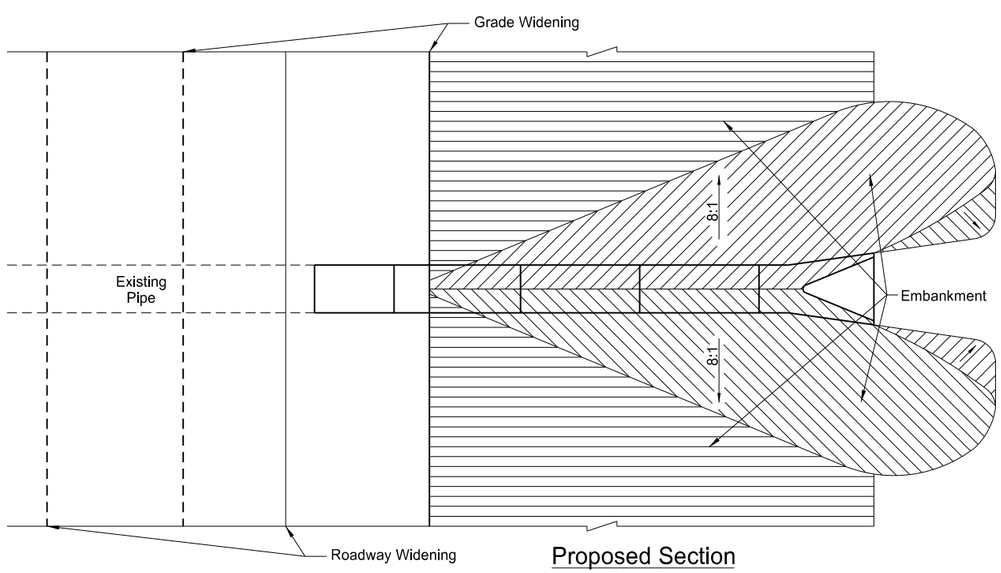

Proposed Section

Plan View

Pay Items
1) Pipe*
2) Remove & Relay Pipe - All Types & Sizes (when required)
3) Remove & Reset End Section or
   Remove End Section and Place New End Section
4) Borrow Excavation (Compaction Control Type A) or
   Common Excavation-Type A
5) Topsoil
6) Seeding
7) Mulching

*Included in Pipe Pay Item
1) Pipe
2) Trench excavation
3) Aggregate Base Course Class 3 or Class 5

Pipe Materials	Dim (A)<=4 Feet		Dim (A)>4 Feet		Backfill Dimension
	Material (B)	Material (C)	Material (B)	Material (C)	Dim (D)
Concrete	Embank or Aggr	Aggr	Embank or Aggr	Embank	0.5 O.D.
Metal	Embank or Aggr	Aggr	Embank or Aggr	Embank	0.5 O.D.+1 Foot

NOTES:
1. Embankment may be either Borrow Excavation (Compaction Control - Type A) or Common Excavation - Type A

2. Aggregate may be either Class 3 or Class 5 Aggregate Base Course.

This document was originally issued and sealed by William Doerr, Registration Number PE- 7113, on 12/04/15 and the original document is stored at the North Dakota Department of Transportation

Mainline ℄ Pipe Extension Detail

ND 58

Jct 200 to Jct 1804

STATE	PROJECT NO.	SECTION NO.	SHEET NO.
ND	SOIB-7-058(013)000	30	1

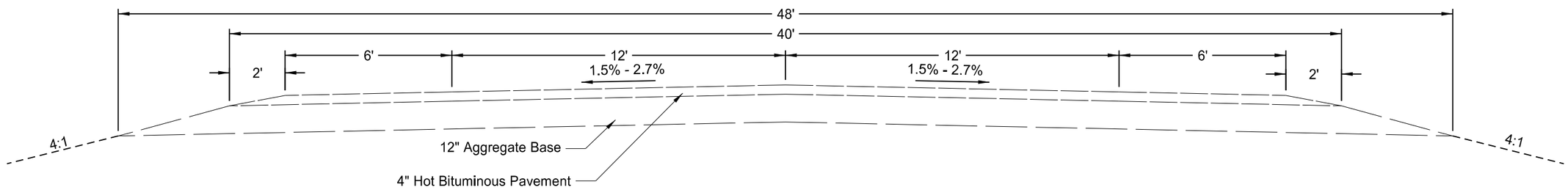

RP 0.000 to RP 6.542
0+00 to 344+80

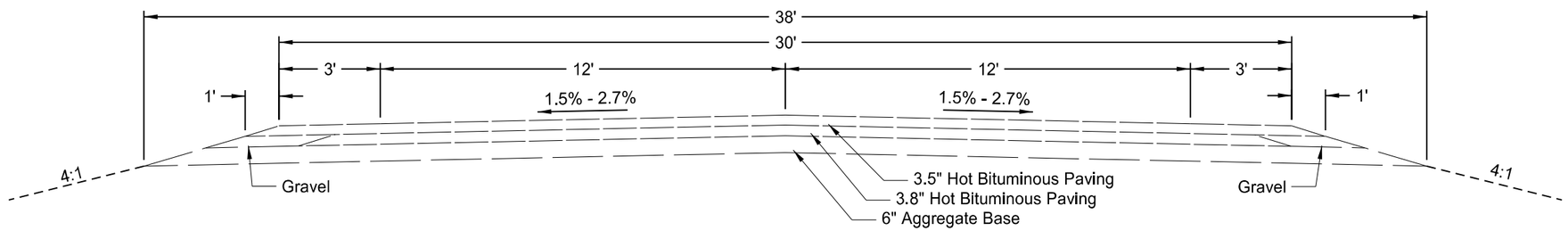

RP 6.542 to RP 9.8
344+80 to 487+00

This document was originally issued and sealed by William Doerr, Registration Number PE- 7113, on 12/04/15 and the original document is stored at the North Dakota Department of Transportation

Existing Typical Section

ND 58

Jct 200 to Jct 1804

STATE	PROJECT NO.	SECTION NO.	SHEET NO.
ND	SOIB-7-058(013)000	30	2

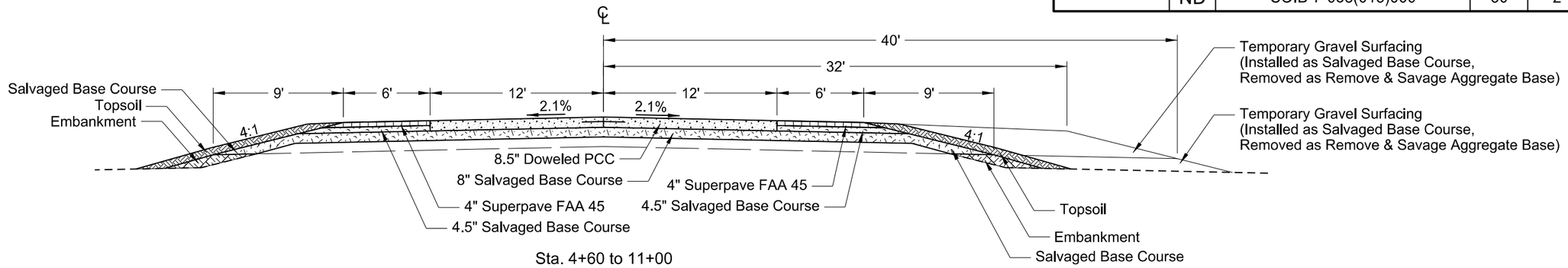

Sta. 4+60 to 11+00

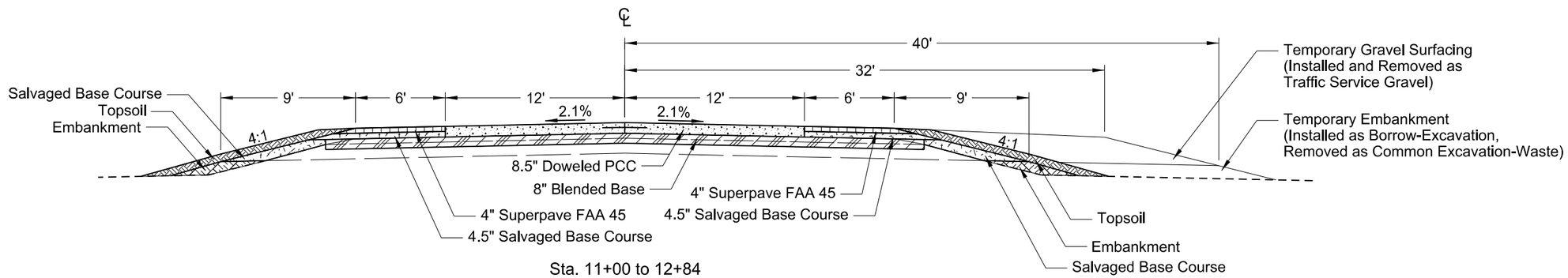

Sta. 11+00 to 12+84
Sta. 83+99 to 105+67
Sta. 112+38 to 200+67
Sta. 323+98 to Sta 330+00

NOTE:
For ease of calculations, the station ranges are split in middle of the transition between each section. Construct transitions per Section 90.

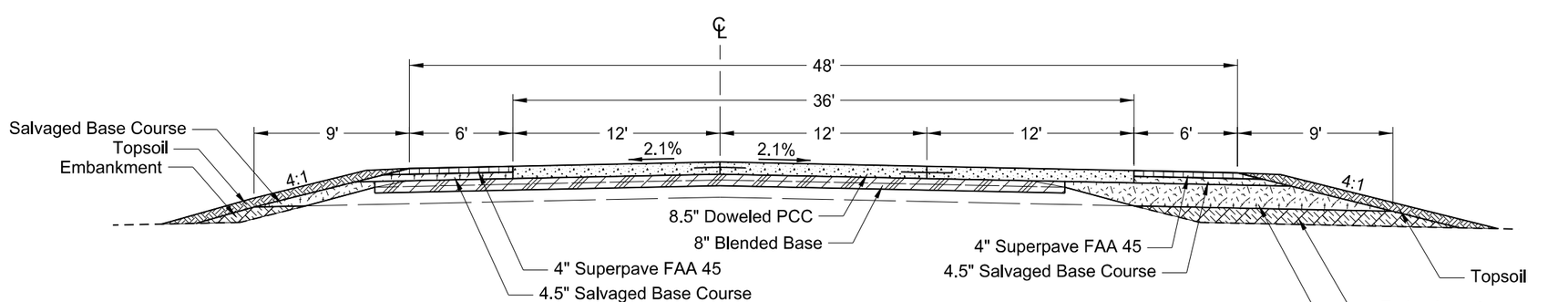

Sta. 12+84 to 25+36
Sta. 32+08 to 52+84
Sta. 59+55 to 77+27
Sta. 218+51 to 257+67
Sta. 270+97 to 317+26

This document was originally issued and sealed by William Doerr, Registration Number PE- 7113, on 12/04/15 and the original document is stored at the North Dakota Department of Transportation

Proposed Typical Section

ND 58

Jct 200 to Jct 1804

STATE	PROJECT NO.	SECTION NO.	SHEET NO.
ND	SOIB-7-058(013)000	30	3

NOTE:
For ease of calculations, the station ranges are split in middle of the transition between each section. Construct transitions per Section 90.

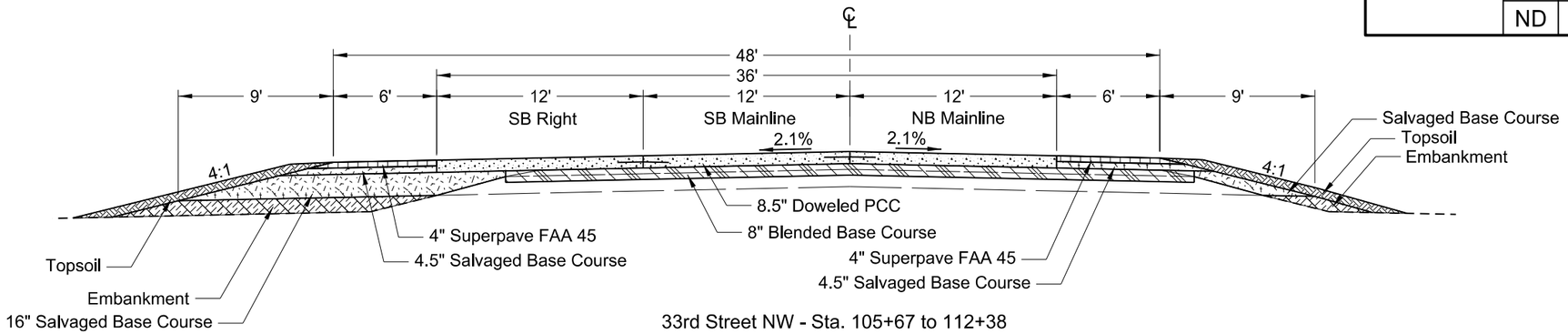

33rd Street NW - Sta. 105+67 to 112+38
37th Street NW - Sta. 317+26 to 323+98

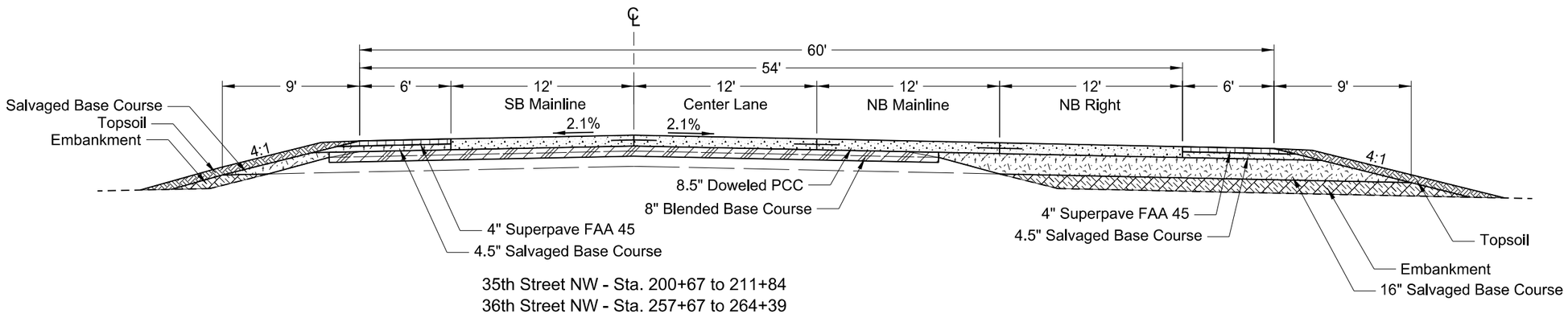

35th Street NW - Sta. 200+67 to 211+84
36th Street NW - Sta. 257+67 to 264+39

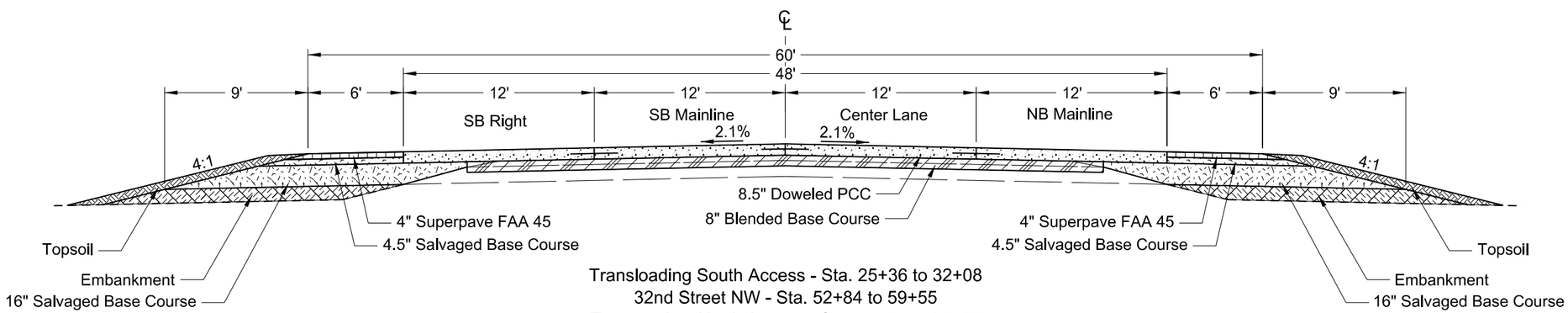

Transloading South Access - Sta. 25+36 to 32+08
32nd Street NW - Sta. 52+84 to 59+55
Transloading North Access - Sta. 77+27 to 83+99
35th Street NW - Sta. 211+84 to 218+51
36th Street NW - Sta. 264+39 to 270+97

This document was originally issued and sealed by William Doerr, Registration Number PE- 7113, on 12/04/15 and the original document is stored at the North Dakota Department of Transportation

Proposed Typical Section

ND 58

Jct 200 to Jct 1804

STATE	PROJECT NO.	SECTION NO.	SHEET NO.
ND	SOIB-7-058(013)000	30	4

NOTE:
For ease of calculations, the station ranges are split in middle of the transition between each section. Construct transitions per Section 90.

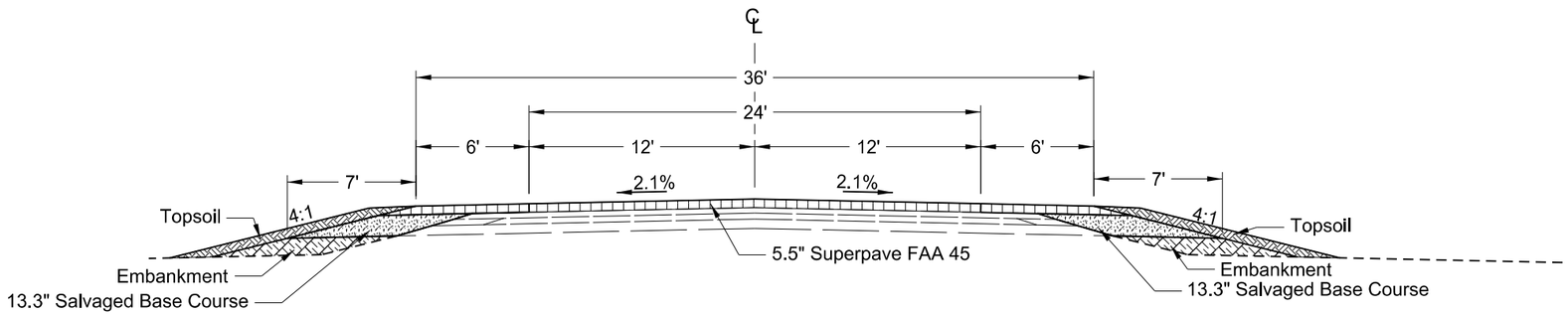

Sta. 330+00 to 362+43
Sta. 369+32 to 443+23
Sta. 456+21 to 487+00
(Missouri River Bridge: Sta. 443+23 to 456+21)

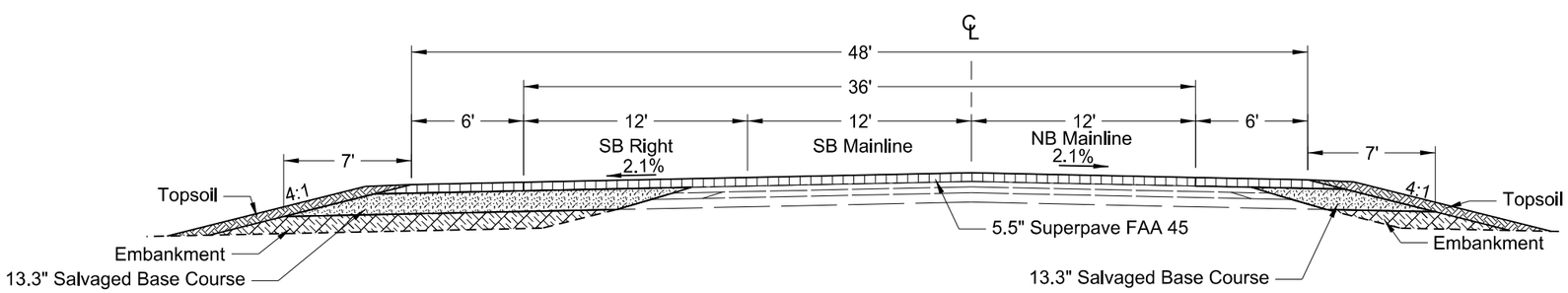

38th Street NW - Sta. 362+43 to 369+32

This document was originally issued and sealed by

Registration Number
PE- 7113,
on 12/04/15 and the original document is stored at the North Dakota Department of Transportation

Proposed Typical Section

ND 58

Jct 200 to Jct 1804

STATE	PROJECT NO.	SECTION NO.	SHEET NO.
ND	SOIB-7-058(013)000	30	5

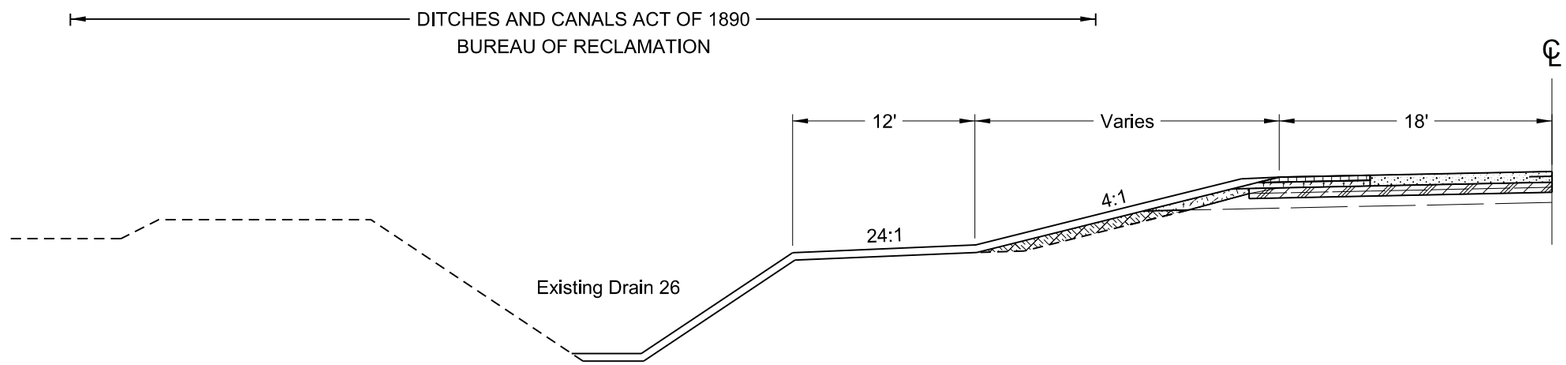

DRAIN 26
STA. 24+50 TO 32+00
STA. 52+00 TO 56+60

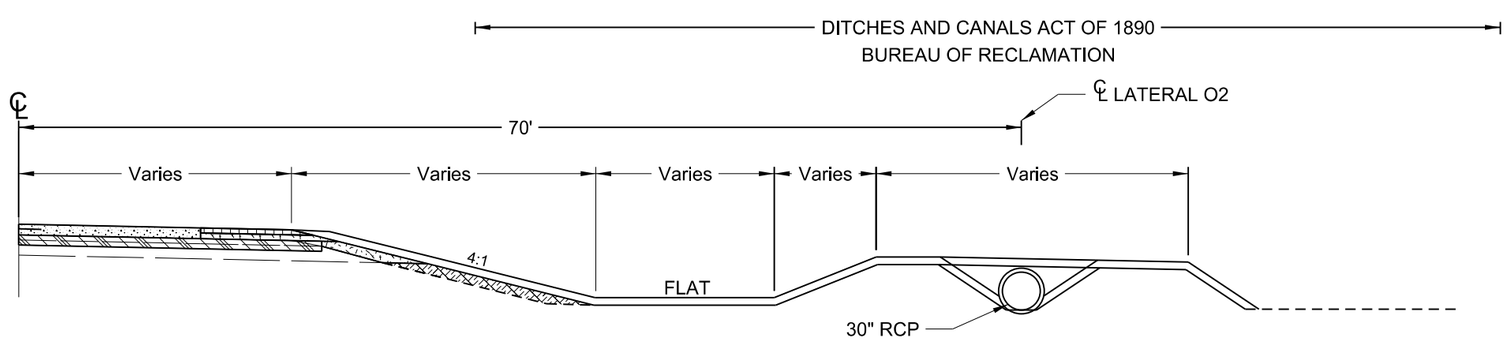

LATERAL O2
STA. 52+45 TO 66+00

This document was originally issued and sealed by William Doerr, Registration Number PE- 7113, on 12/04/15 and the original document is stored at the North Dakota Department of Transportation

Typical Section - Irrigation

ND 58

Jct 200 to Jct 1804

STATE	PROJECT NO.	SECTION NO.	SHEET NO.
ND	SOIB-7-058(013)000	30	6

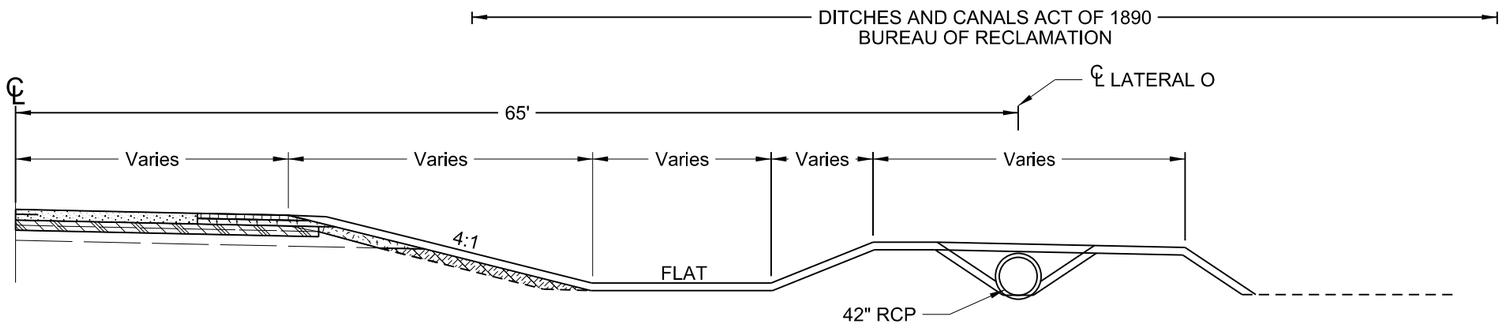

LATERAL O
STA. 66+00 TO 79+10

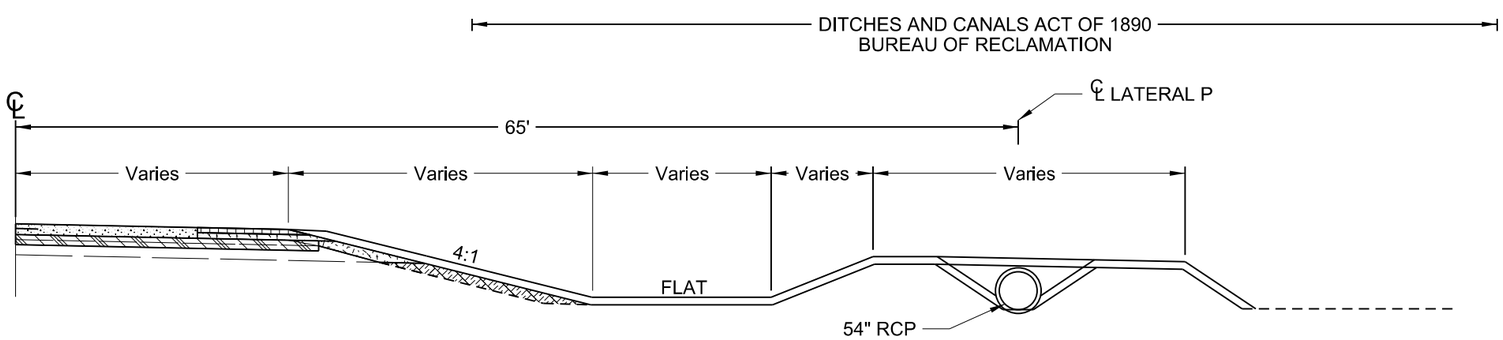

LATERAL P
STA. 158+11 to 166+39

This document was originally issued and sealed by William Doerr, Registration Number PE- 7113, on 12/04/15 and the original document is stored at the North Dakota Department of Transportation

Typical Section - Irrigation

ND 58

Jct 200 to Jct 1804

STATE	PROJECT NO.	SECTION NO.	SHEET NO.
ND	SOIB-7-058(013)000	50	1

Manhole No.	1
Sta	26+81 - 70' Lt
Type	72" Manhole
Rim Elev	1901.90
Top Base Elev	1893.00
Invert N (30") Elev	1893.9
Invert E (24") Elev	1893.9
Invert S (30") Elev	1893.29
Invert W (18") Elev	1894.5
Riser	7.23

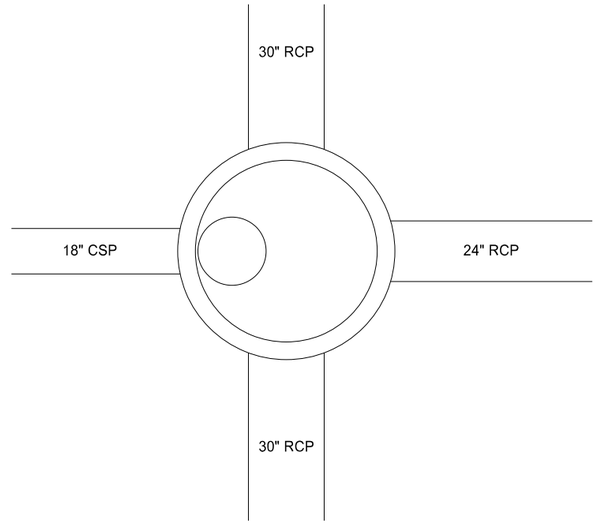

Manhole No.	2
Sta	52+32 - 65' Lt
Type	72" Manhole
Rim Elev	1907.2
Top Base Elev	1896.38
Invert N (30") Elev	1896.72
Invert S (30") Elev	1896.67
Invert W (24") Elev	1896.96
Riser	9.15

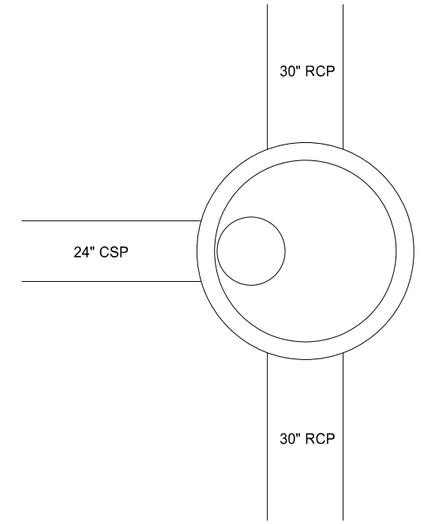

Manhole No.	4
Sta	53+31 - 65' Lt
Type	72" Manhole
Rim Elev	1905.90
Top Base Elev	1896.71
Invert N (30") Elev	1897.10
Invert E (30") Elev	1897.10
Invert S (30") Elev	1897.00
Invert W (18") Elev	1898.40
Riser	7.52

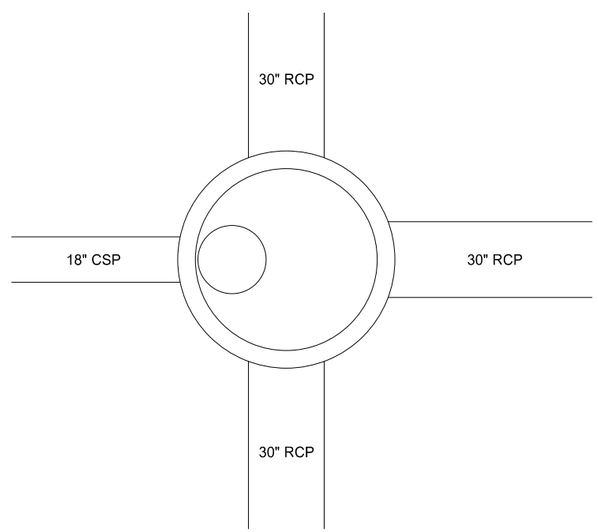

Manhole No.	5
Sta	56+50 - 65' Lt
Type	72" Manhole
Rim Elev	1906.30
Top Base Elev	1899.46
Invert N (24") Elev	1900.60
Invert E (30") Elev	1899.85
Invert S (30") Elev	1899.75
Riser	5.17

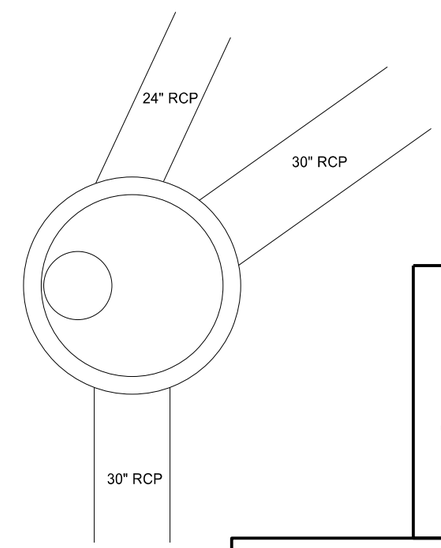

This document was originally issued and sealed by William Doerr, Registration Number PE- 7113, on 12/04/15 and the original document is stored at the North Dakota Department of Transportation

Manhole Details

ND 58

Jct 200 to Jct 1804

STATE	PROJECT NO.	SECTION NO.	SHEET NO.
ND	SOIB-7-058(013)000	50	2

SPEC	CODE	BID ITEM	QUANTITY	UNIT
210	210	FOUNDATION FILL 76+29 RT	3.5	CY
602	1130	CLASS AE-3 CONCRETE 76+29 RT	5.2	CY
612	115	REINFORCING STEEL - GRADE 60 76+29 RT	1,145	LBS

BAR LIST - DISTRIBUTION BOX STATION 76+29 RT

SIZE	MARK	NO.	LENGTH	SHAPE
4	C1	2	4'-7"	BENT
4	C2	4	9'-2"	BENT
4	D1	17	2'-6"	STR.
4	H1	5	7'-5"	BENT
4	H2	5	7'-7"	BENT
4	H3	5	12'-2"	BENT
4	H4	5	12'-6"	BENT
4	H5	5	7'-10"	BENT
4	H6	5	8'-2"	BENT
4	H7	5	5'-5"	BENT
4	H8	5	5'-7"	BENT
4	H9	14	10'-8"	STR.
5	H10	10	7'-8"	STR.
5	H11	16	6'-4"	STR.
5	V1	50	8'-8"	BENT
4	V2	27	6'-7"	BENT

ESTIMATED MATERIAL QUANTITIES

REINFORCING STEEL GRADE 60 (LBS)	CLASS AAE-3 CONCRETE (CY)	FOUNDATION FILL
1,145	5.2	3.5

Note: Contractor to match existing top of wall and top of floor elevations with new floor and wall elevations.

Drill and epoxy all D1 dowels into the existing walls and floors. Center dowels on the existing box wall or floor thickness.

Epoxy to meet the requirements of Section 806.

DESIGN STRENGTHS:

f'c = 4,000 psi ~ Class AAE-3 Concrete
fy = 60,000 psi ~ Reinforcing Steel

Load & Resistance Factor Design

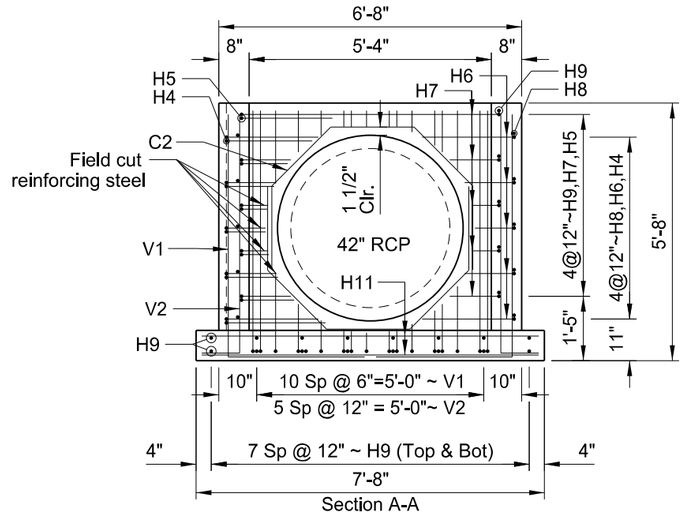

Section A-A

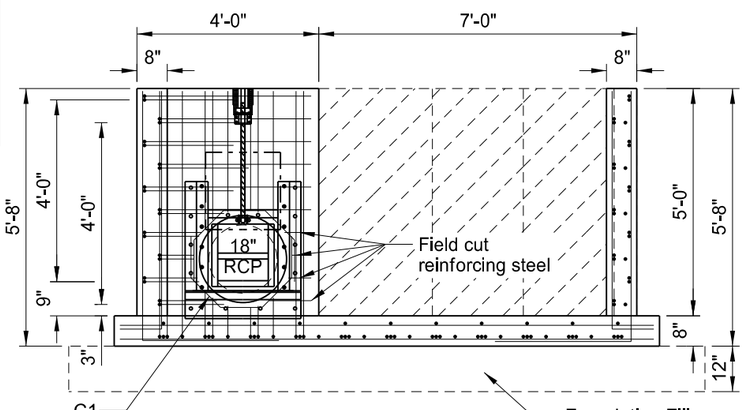

Section B-B

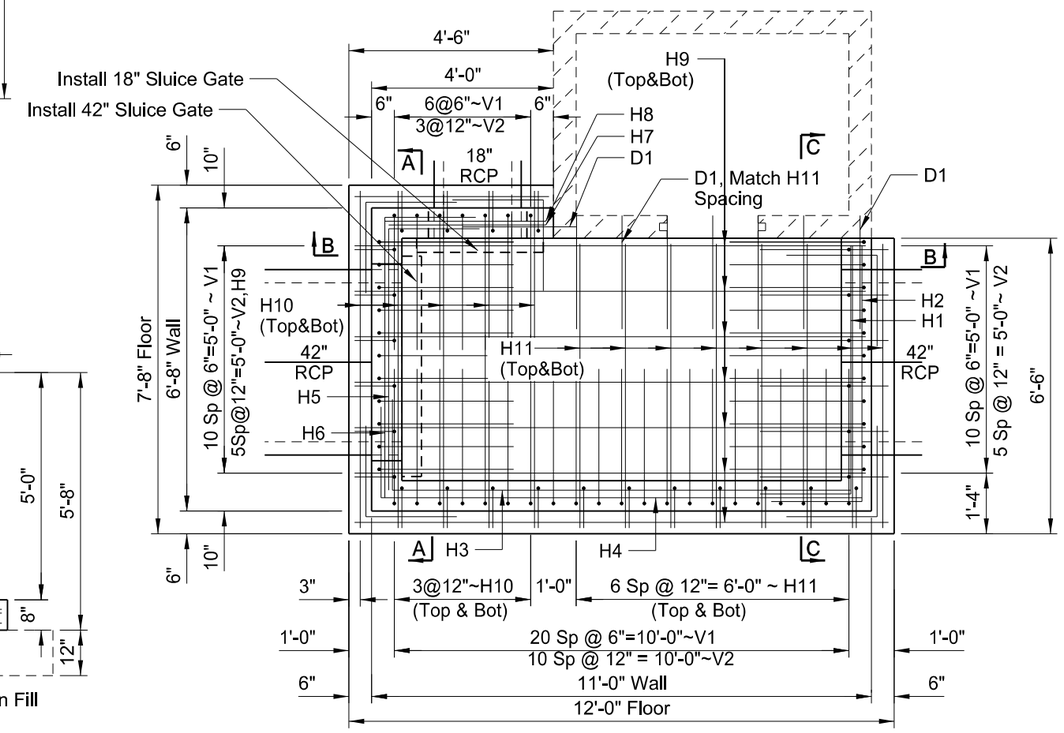

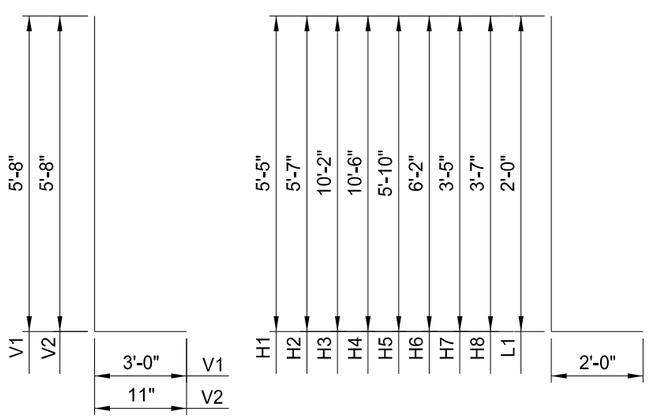

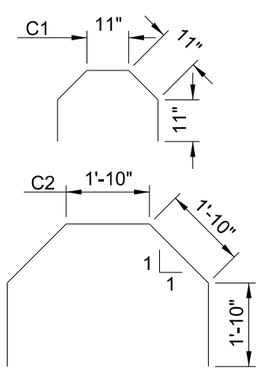

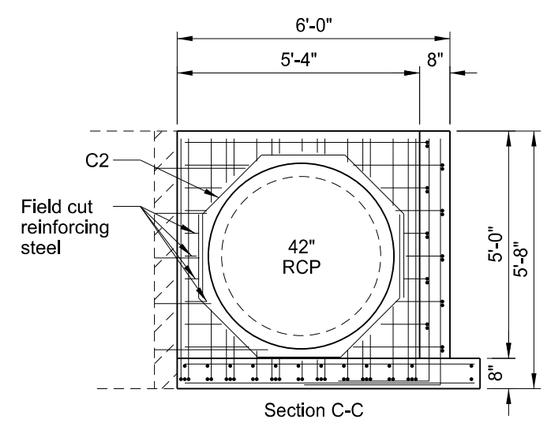

Section C-C

Distribution Box
Station 76+29 Rt

This document was originally issued and sealed by William Doerr, Registration Number PE- 7113, on 12/04/15 and the original document is stored at the North Dakota Department of Transportation

Irrigation Details

ND 58

Jct 200 to Jct 1804

STATE	PROJECT NO.	SECTION NO.	SHEET NO.
ND	SOIB-7-058(013)000	50	3

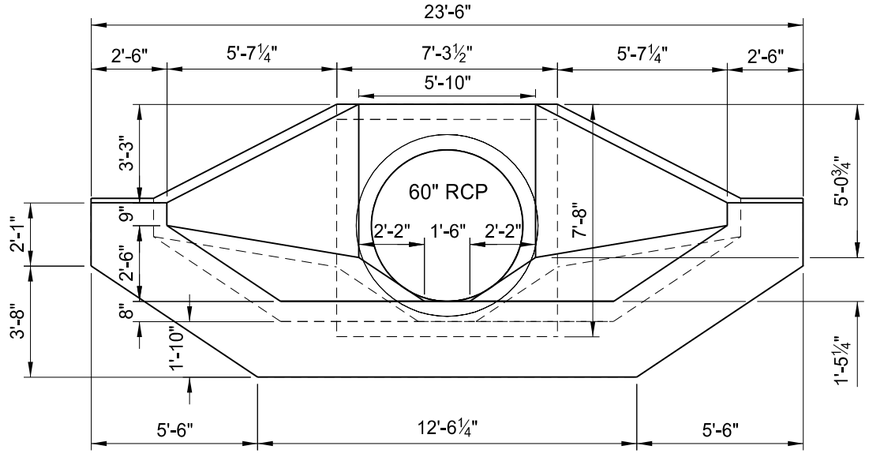

End View
(Showing Dimensions)

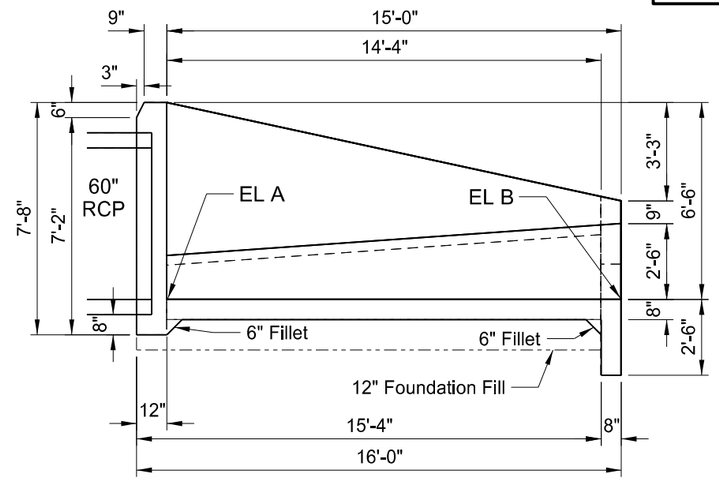

Sec. A-A
(Showing Dimensions)

SPEC	CODE	BID ITEM	QUANTITY	UNIT
210	210	FOUNDATION FILL		
		Sta 26+25 Lt	4.4	CY
		Sta 26+25 Rt	4.4	CY
		Sta 106+12 Lt	4.4	CY
602	1130	CLASS AE-3 CONCRETE		
		Sta 26+25 Lt	9.6	CY
		Sta 26+25 Rt	9.6	CY
		Sta 106+12 Lt	9.6	CY
612	115	REINFORCING STEEL - GRADE 60		
		Sta 26+25 Lt	1,409	LBS
		Sta 26+25 Rt	1,409	LBS
		Sta 106+12 Lt	1,409	LBS

Lateral "N"
Sta 26+25 Lt
Sta 26+25 Rt

Lateral "P"
Sta 106+12 Lt

DESIGN STRENGTHS:

f'c = 4,000 psi ~ Class AAE-3 Concrete
fy = 60,000 psi ~ Reinforcing Steel

Load & Resistance Factor Design

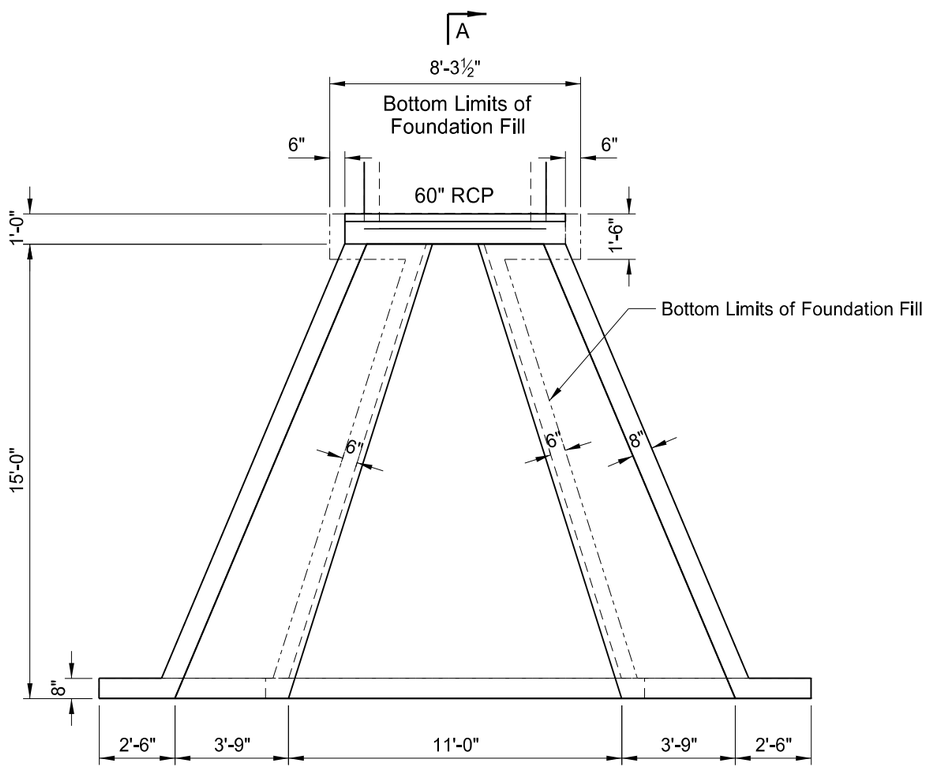

Plan View
(Showing Dimensions)

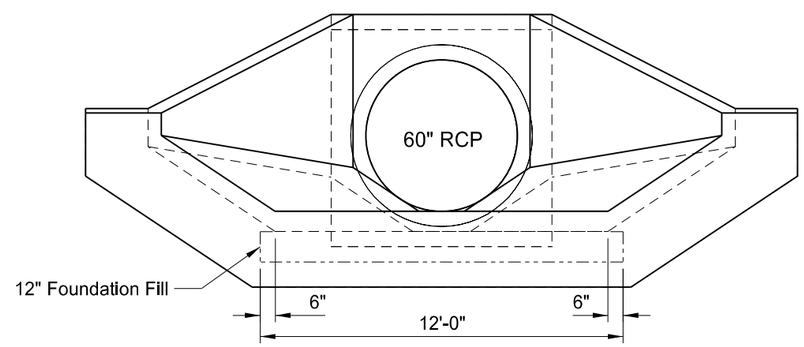

End View
(Foundation Fill Detail)

* Verify Elevations in Field

Lateral "N"	Elev "A"	Elev "B"
Sta 26+25 Lt	1900.22	1900.26
Sta 26+25 Rt	1899.51	1900.31
Lateral "P"		
Sta 106+12 Lt	1916.37	1916.39

This document was originally issued and sealed by William Doerr, Registration Number PE- 7113, on 12/04/15 and the original document is stored at the North Dakota Department of Transportation

Irrigation Details

ND 58

Jct 200 to Jct 1804

STATE	PROJECT NO.	SECTION NO.	SHEET NO.
ND	SOIB-7-058(013)000	50	4

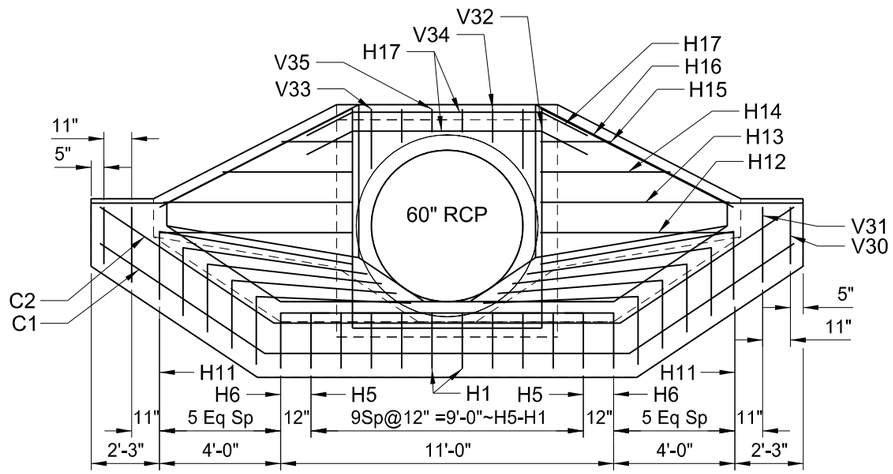

End View
(Showing Reinforcing)
(V1-V29 Not Shown)

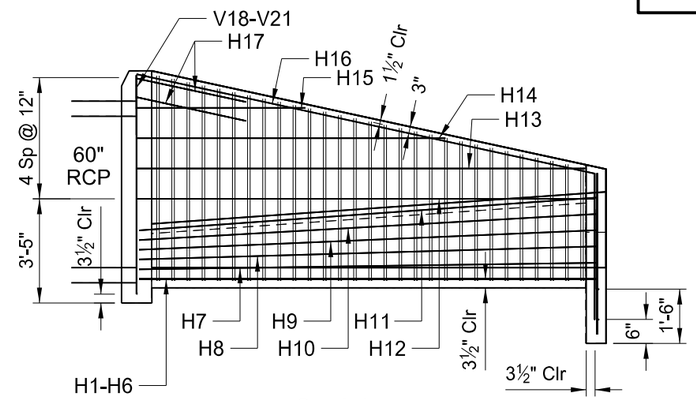

Sec A-A
(Showing Reinforcing)

Lateral "N"
Sta 26+25 Lt
Sta 26+25 Rt

Lateral "P"
Sta 106+12 Lt

See Sect 50 Sheet 11 for Bar List

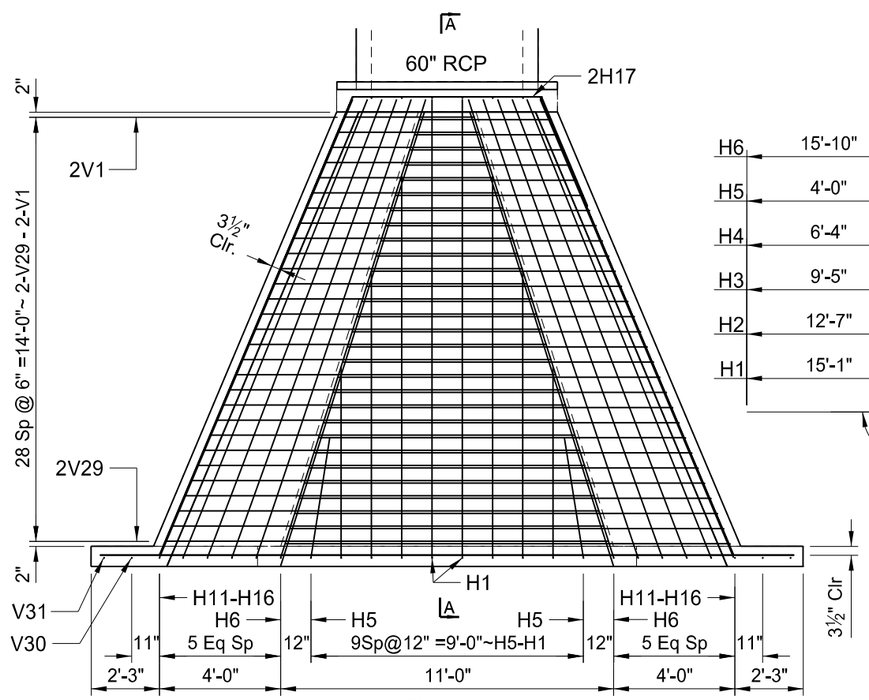

Plan View
(Showing Reinforcing)

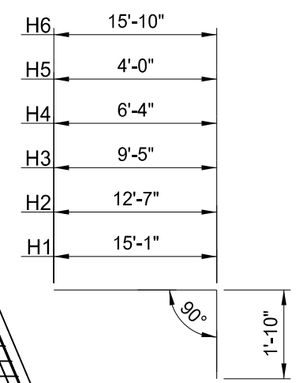

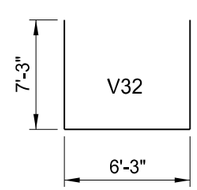

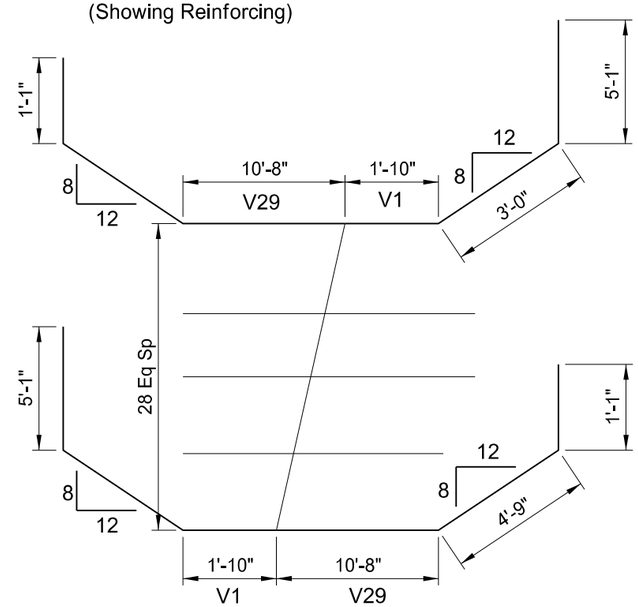

Cut Bar Set V1-V29
2 Sets Shown
Total Length 1 Bar = 26'-5"
Total Length 2 Sets = 766'-1"

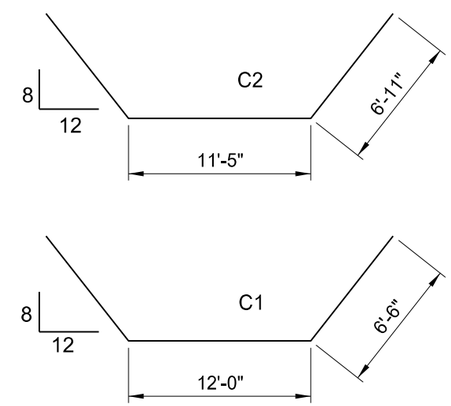

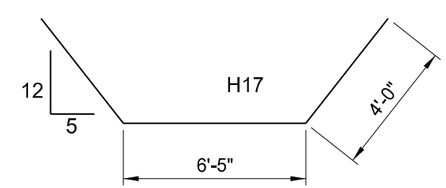

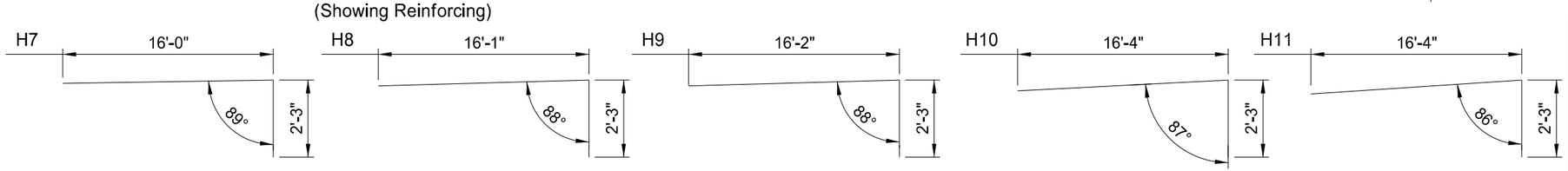

This document was originally issued and sealed by William Doerr, Registration Number PE- 7113, on 12/04/15 and the original document is stored at the North Dakota Department of Transportation

Irrigation Details

ND 58

Jct 200 to Jct 1804

STATE	PROJECT NO.	SECTION NO.	SHEET NO.
ND	SOIB-7-058(013)000	50	5

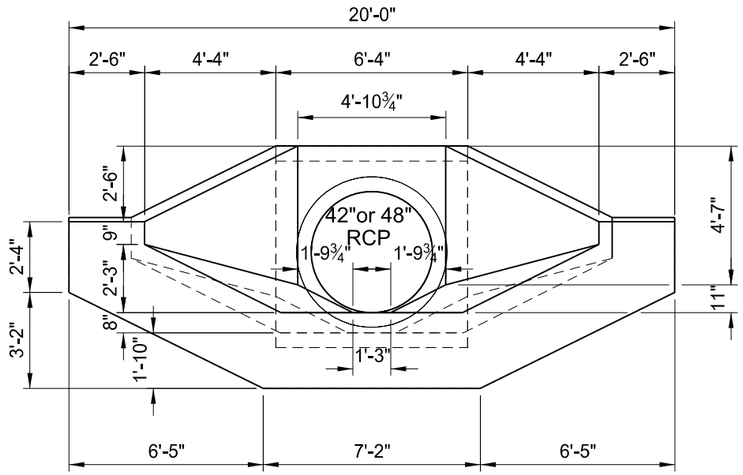

End View
(Showing Dimensions)

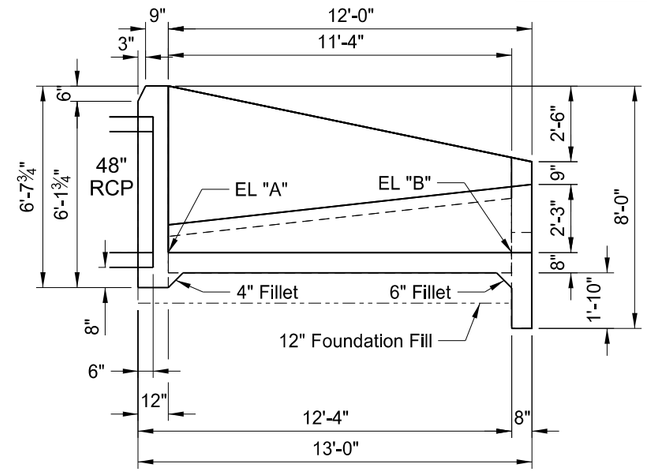

Sec. A-A
(Showing Dimensions)

SPEC	CODE	BID ITEM	QUANTITY	UNIT
210	210	FOUNDATION FILL		
		Sta 79+09 Rt	2.4	CY
		Sta 150+44 Lt	2.4	CY
		Sta 206+76 Lt	2.4	CY
		Sta 209+45 Rt	2.4	CY
		Sta 283+42 Rt	2.4	CY
602	1130	CLASS AE-3 CONCRETE		
		Sta 79+09 Rt	6.8	CY
		Sta 150+44 Lt	6.8	CY
		Sta 206+76 Lt	6.8	CY
		Sta 209+45 Rt	6.8	CY
		Sta 283+42 Rt	6.8	CY
612	115	REINFORCING STEEL - GRADE 60		
		Sta 79+09 Rt	991	LBS
		Sta 150+44 Lt	991	LBS
		Sta 206+76 Lt	991	LBS
		Sta 209+45 Rt	991	LBS
		Sta 283+42 Rt	991	LBS

Lateral "O"
Sta 79+09 Rt

Lateral "Q"
Sta 150+44 Lt
Sta 206+76 Lt
Sta 209+45 Rt

Lateral "S"
Sta 283+42 Rt

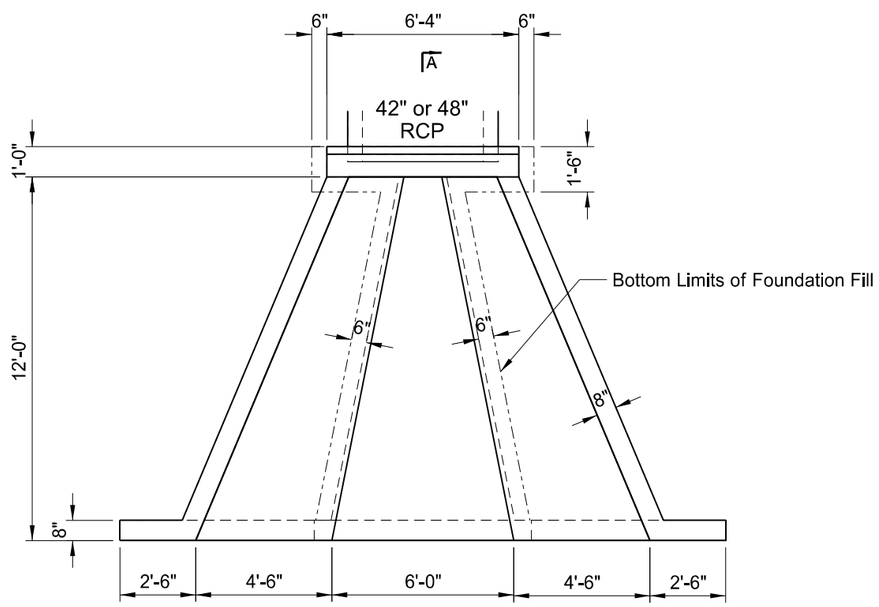

A

Plan View
(Showing Dimensions)

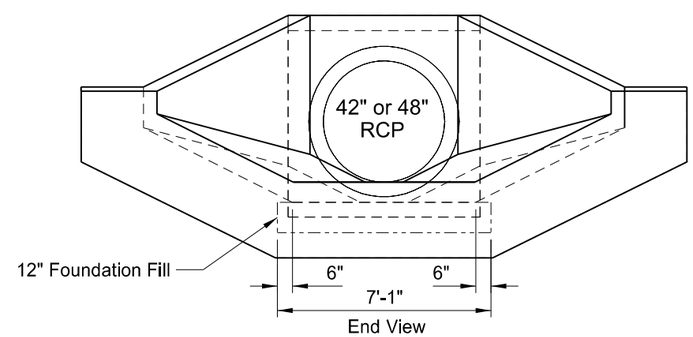

End View
(Foundation Fill Detail)

DESIGN STRENGTHS:

f'c = 4,000 psi ~ Class AAE-3 Concrete
fy = 60,000 psi ~ Reinforcing Steel

Load & Resistance Factor Design

* Verify Elevations in Field

Lateral "O"	Elev "A"	Elev "B"
Sta 79+09 Rt	1911.35	1911.25
Lateral "Q"		
Sta 150+44 Lt	1904.17	1905.32
Sta 206+76 Lt	1895.13	1895.67
Sta 209+45 Rt	1893.46	1894.46
Lateral "S"		
Sta 283+42 Rt	1892.04	1891.47

This document was originally issued and sealed by William Doerr, Registration Number PE- 7113, on 12/04/15 and the original document is stored at the North Dakota Department of Transportation

Irrigation Details

ND 58

Jct 200 to Jct 1804

STATE	PROJECT NO.	SECTION NO.	SHEET NO.
ND	SOIB-7-058(013)000	50	6

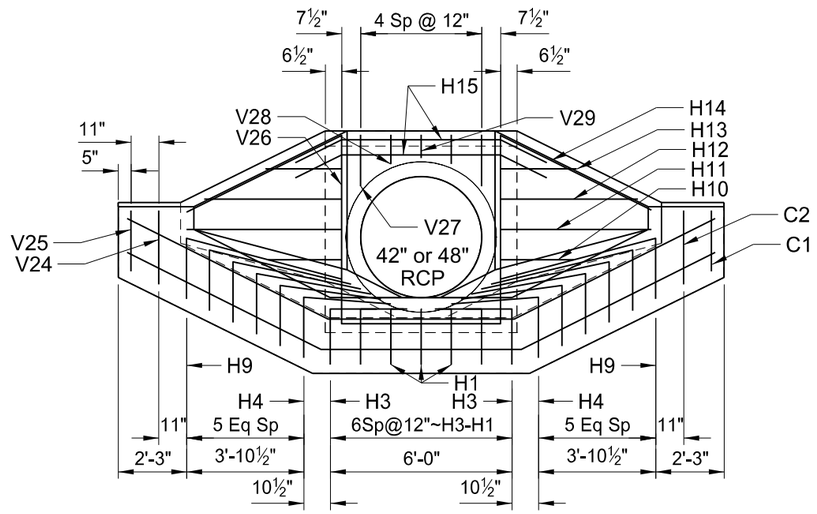

End View
(Showing Reinforcing)
(V1-V23 Not Shown)

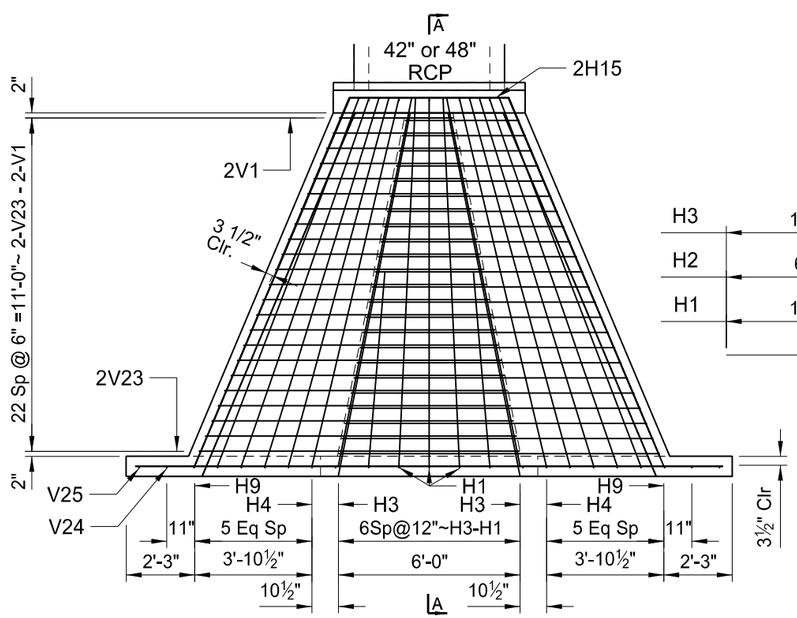

Plan View

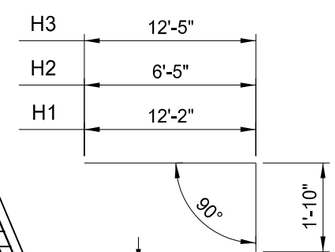

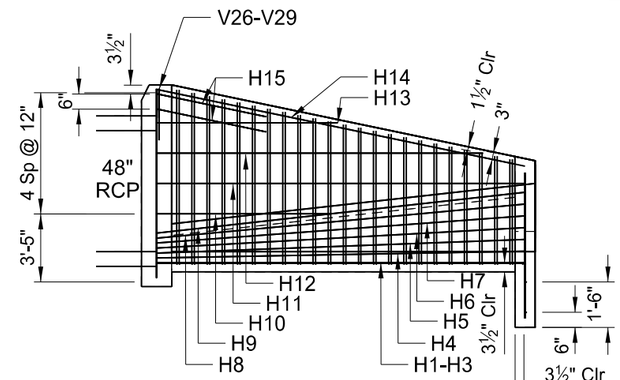

Sec A-A
(Showing Reinforcing)

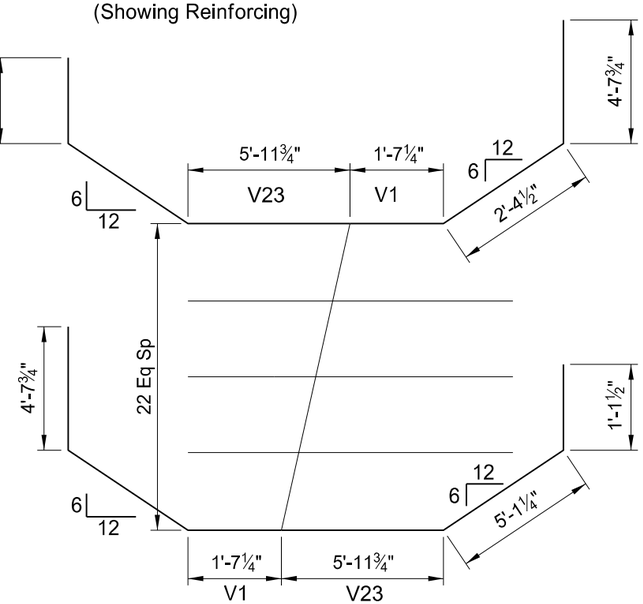

Cut Bar Set V1-V23
2 Sets Shown
Total Length 1 Bar = 20'-10"
Total Length 2 Sets = 479'-2"

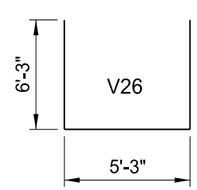

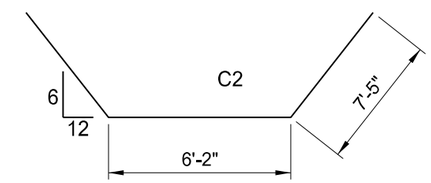

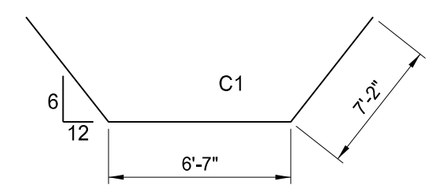

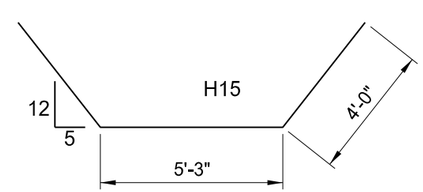

Lateral "O"
Sta 79+09 Rt

Lateral "Q"
Sta 150+44 Lt
Sta 206+76 Lt
Sta 209+45 Rt

Lateral "S"
Sta 283+42 Rt

See Sect 50 Sheet 11 for Bar List

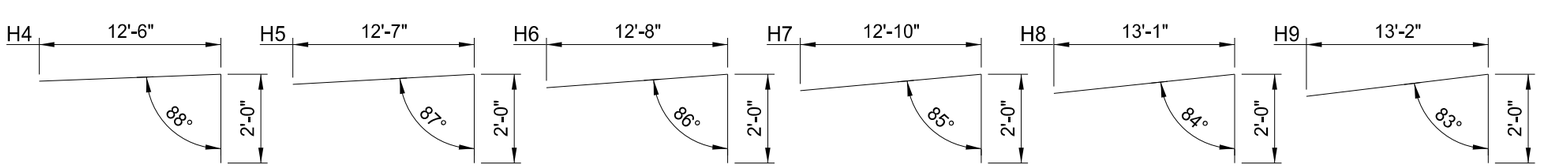

This document was originally issued and sealed by William Doerr, Registration Number PE- 7113, on 12/04/15 and the original document is stored at the North Dakota Department of Transportation

Irrigation Details

ND 58

Jct 200 to Jct 1804

STATE	PROJECT NO.	SECTION NO.	SHEET NO.
ND	SOIB-7-058(013)000	50	7

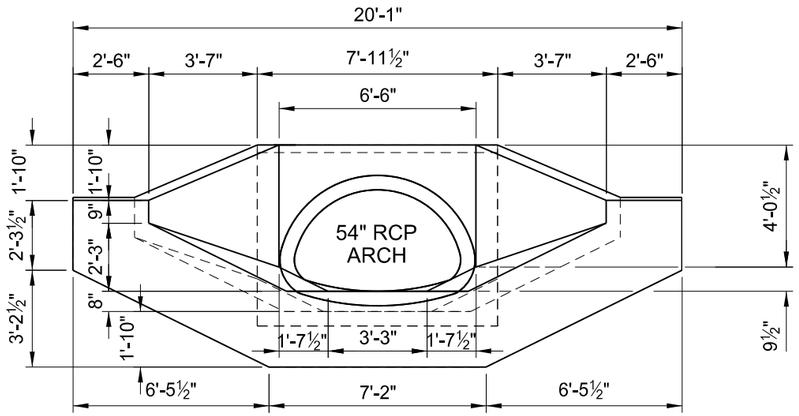

End View
(Showing Dimensions)

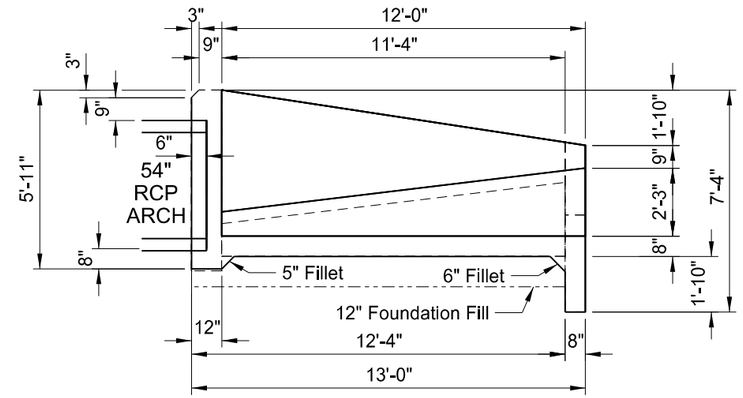

Sec. A-A
(Showing Dimensions)

SPEC	CODE	BID ITEM	QUANTITY	UNIT
210	210	FOUNDATION FILL Sta 166+53 Rt	2.9	CY
602	1130	CLASS AE-3 CONCRETE Sta 166+53 Rt	7.0	CY
612	115	REINFORCING STEEL - GRADE 60 Sta 166+53 Rt	982	LBS

Lateral "Q"
Sta 166+53 Rt

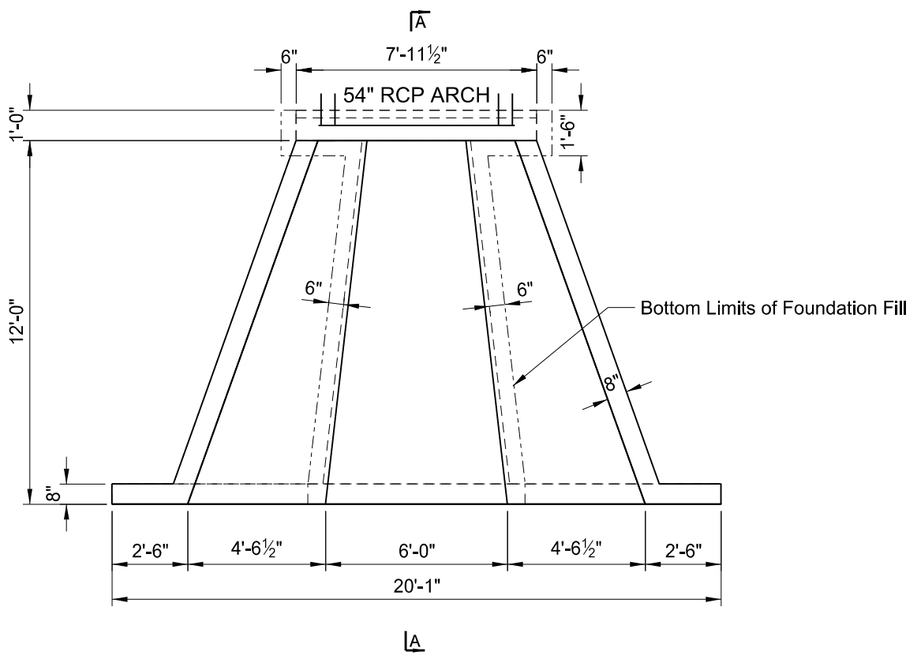

Plan View
(Showing Dimensions)

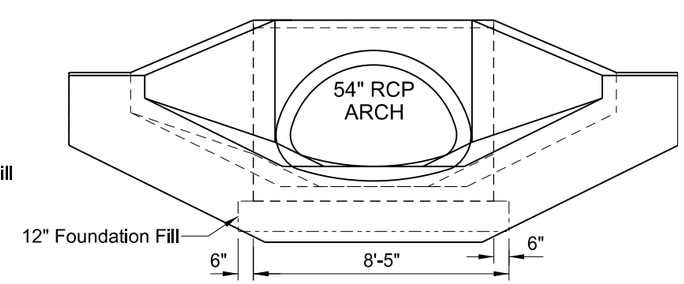

End View
(Foundation Fill Detail)

DESIGN STRENGTHS:

f'c = 4,000 psi ~ Class AAE-3 Concrete
fy = 60,000 psi ~ Reinforcing Steel

Load & Resistance Factor Design

This document was originally issued and sealed by William Doerr, Registration Number PE- 7113, on 12/04/15 and the original document is stored at the North Dakota Department of Transportation

Note: Tie into Existing Irrigation Structure at 158+11 RT

* Verify Elevations in Field

Lateral "Q"	Elev "A"	Elev "B"
Sta 158+11 Rt	*	*
Sta 166+53 Rt	1900.84	1900.70

Irrigation Details

ND 58

Jct 200 to Jct 1804

STATE	PROJECT NO.	SECTION NO.	SHEET NO.
ND	SOIB-7-058(013)000	50	8

Lateral "Q"
Sta 166+53 Rt

See Sect 50 Sheet 11 for Bar List

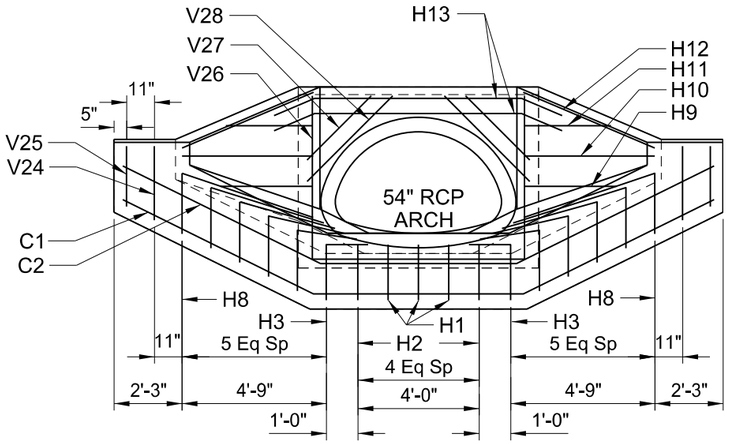

End View
(Showing Reinforcing)
(V1-V23 Not Shown)

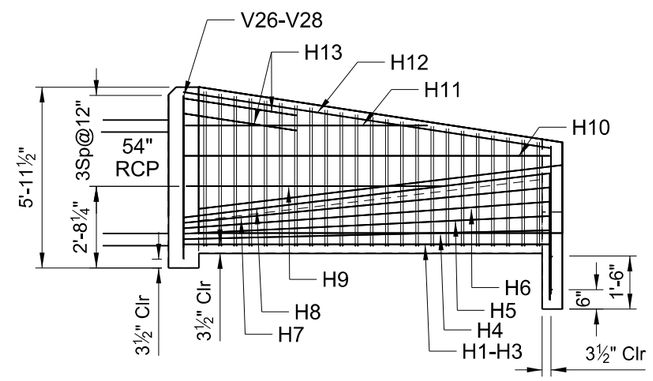

Sec A-A
(Showing Reinforcing)

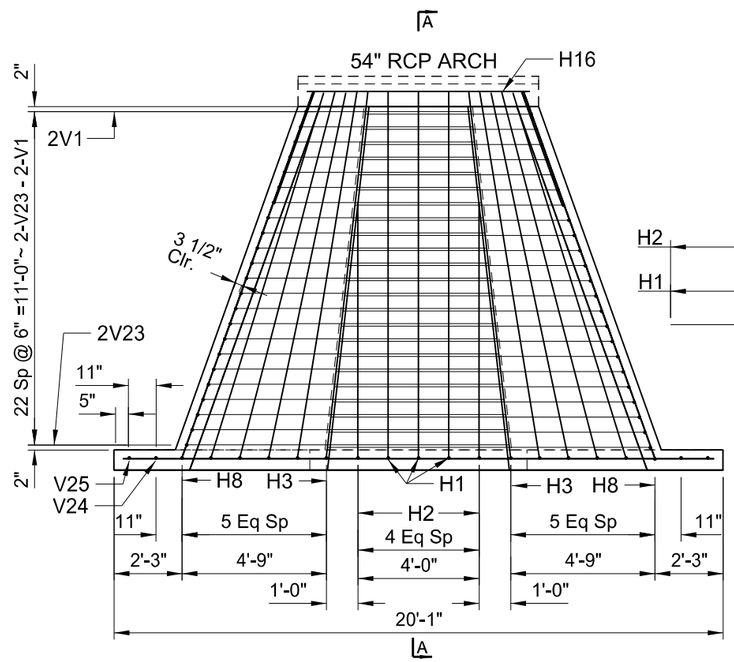

Plan View
(Showing Reinforcing)

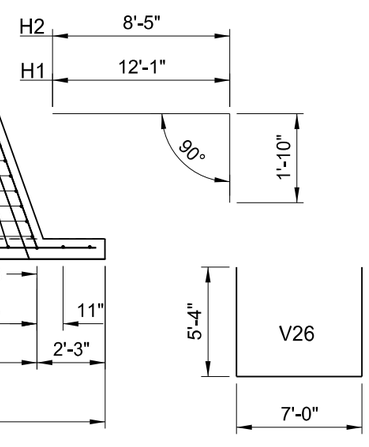

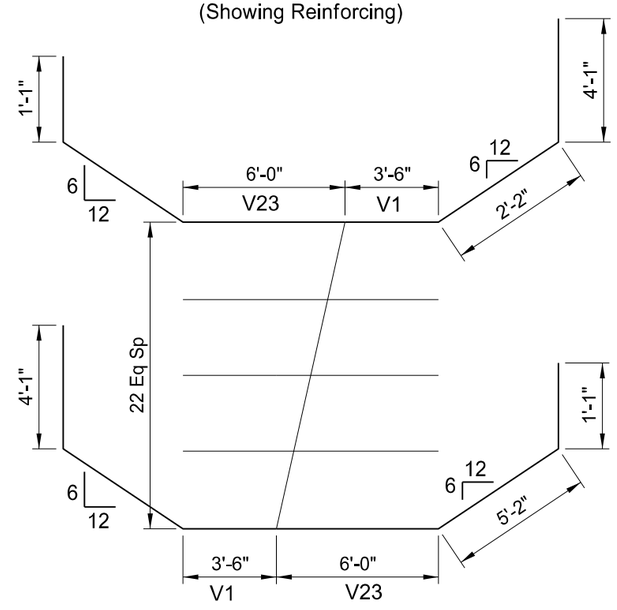

Cut Bar Set V1-V23
2 Sets Shown
Total Length 1 Bar = 22'-0"
Total Length 2 Sets = 506'-0"

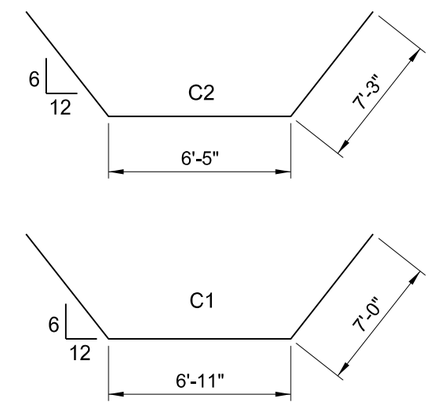

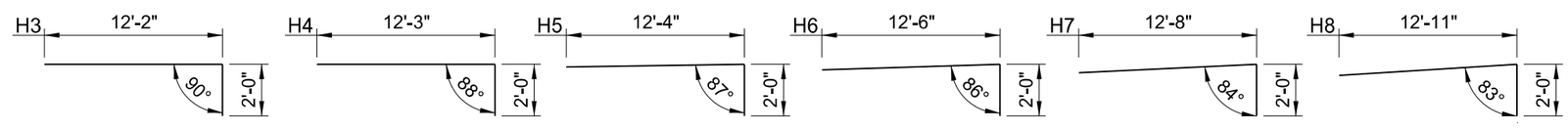

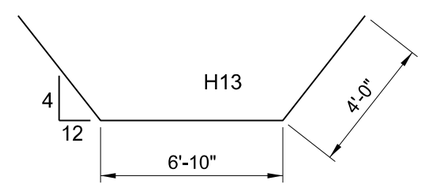

This document was originally issued and sealed by William Doerr, Registration Number PE- 7113, on 12/04/15 and the original document is stored at the North Dakota Department of Transportation

Irrigation Details

ND 58

Jct 200 to Jct 1804

STATE	PROJECT NO.	SECTION NO.	SHEET NO.
ND	SOIB-7-058(013)000	50	9

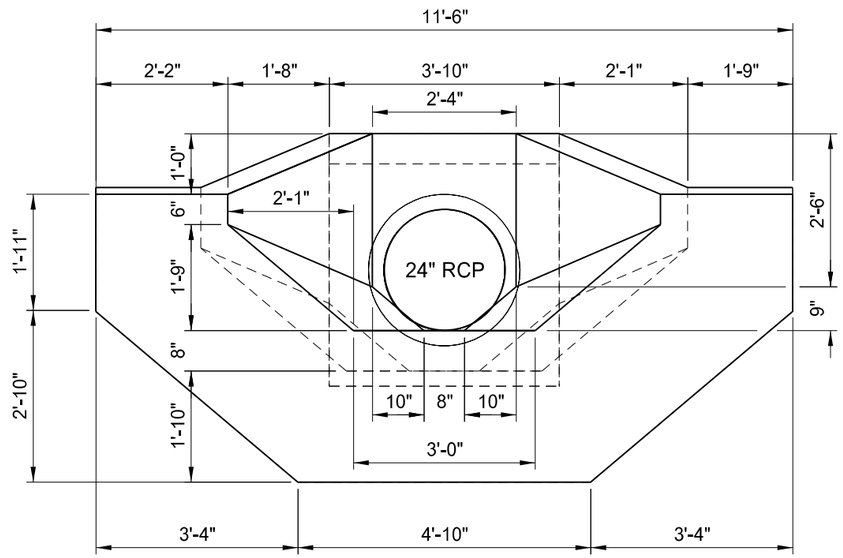

End View
(Showing Dimensions)

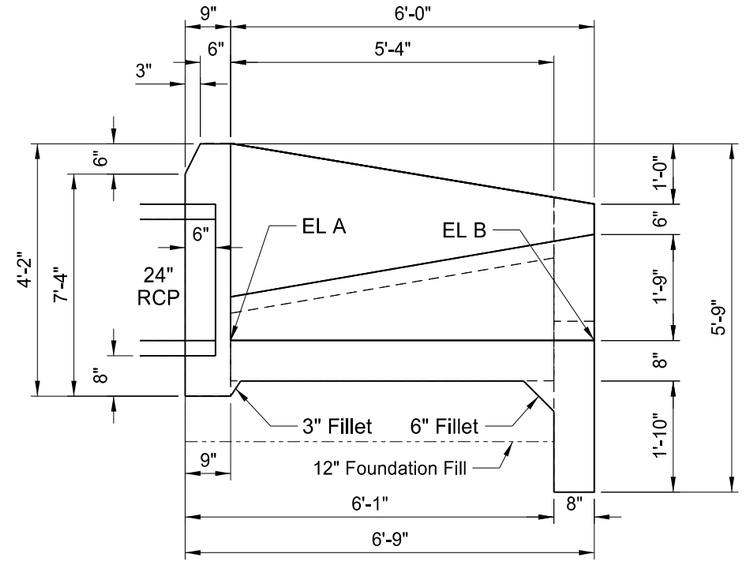

Sec. A-A
(Showing Dimensions)

SPEC	CODE	BID ITEM	QUANTITY	UNIT
210	210	FOUNDATION FILL		
		384+44 Lt	0.7	CY
		384+44 Rt	0.7	CY
602	1130	CLASS AE-3 CONCRETE		
		384+44 Lt	2.4	CY
		384+44 Rt	2.4	CY
612	115	REINFORCING STEEL - GRADE 60		
		384+44 Lt	312	LBS
		384+44 Rt	312	LBS

Lateral "T"
Sta 384+44 Lt & Rt

DESIGN STRENGTHS:

f'c = 4,000 psi ~ Class AAE-3 Concrete
fy = 60,000 psi ~ Reinforcing Steel

Load & Resistance Factor Design

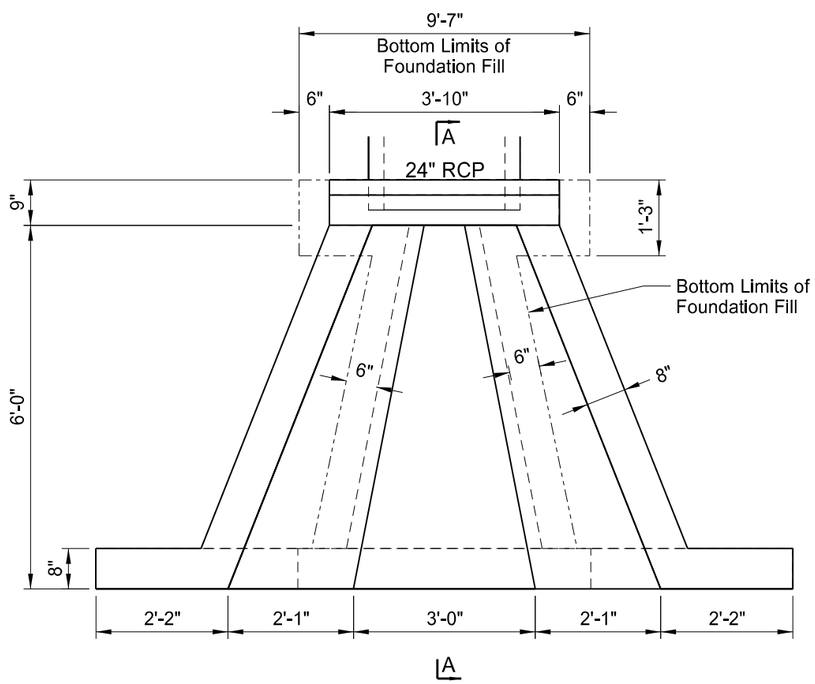

Plan View
(Showing Dimensions)

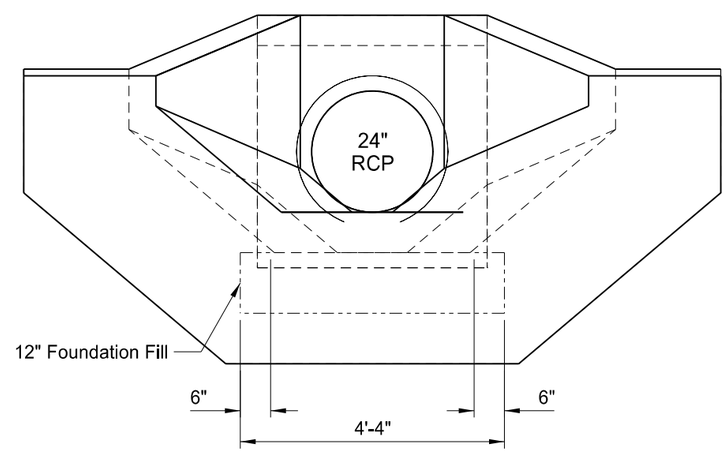

End View
(Foundation Fill Detail)

* Verify Elevations in Field

Lateral "T" Sta 384+44		
	Lt	Rt
EL A	1873.80*	1873.70*
EL B	1873.92*	1873.00*

This document was originally issued and sealed by William Doerr, Registration Number PE- 7113, on 12/04/15 and the original document is stored at the North Dakota Department of Transportation

Irrigation Details

ND 58

Jct 200 to Jct 1804

STATE	PROJECT NO.	SECTION NO.	SHEET NO.
ND	SOIB-7-058(013)000	50	10

Lateral "T"
Sta 384+44 Lt & Rt

See Sect 50 Sheet 11 for Bar List

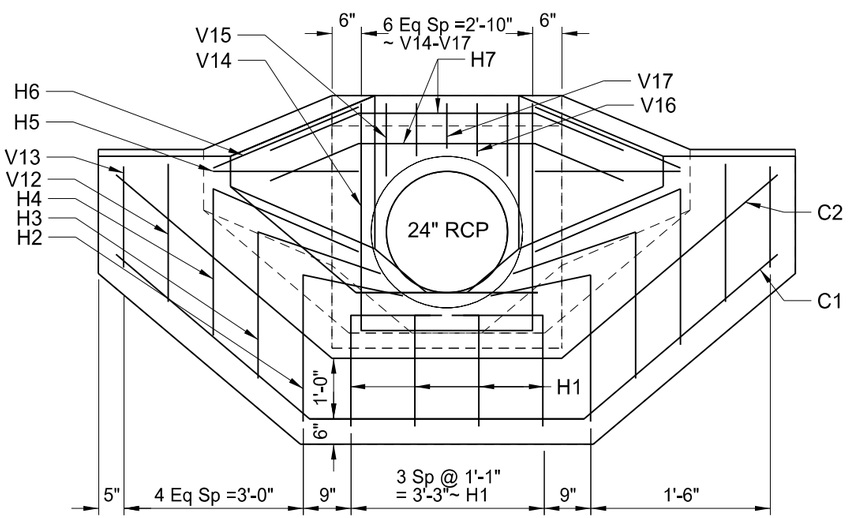

End View
(Showing Reinforcing)
(V1-V11 Not Shown)

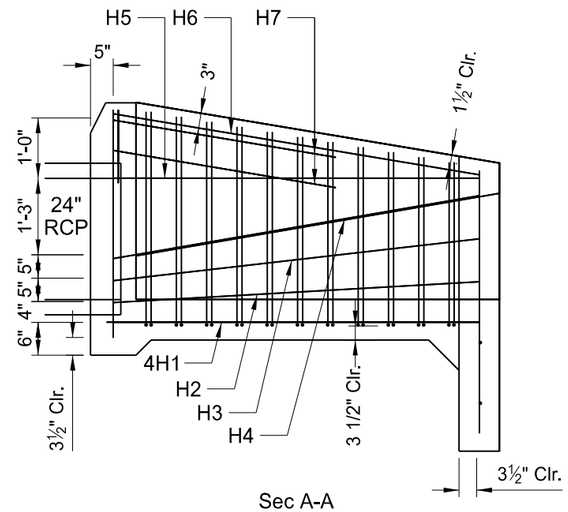

Sec A-A
(Showing Reinforcing)

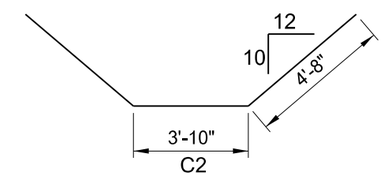

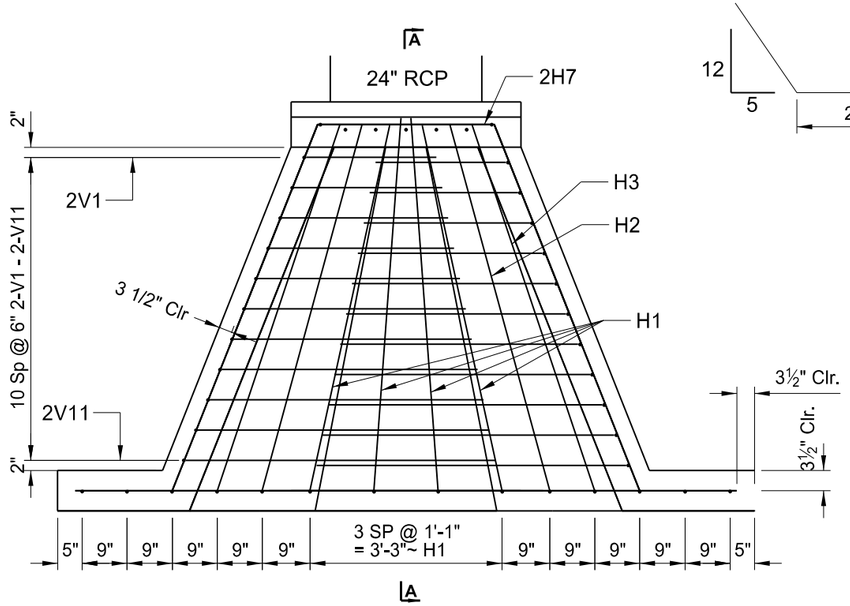

Plan View
(Showing Reinforcing)

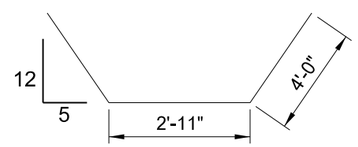

H7

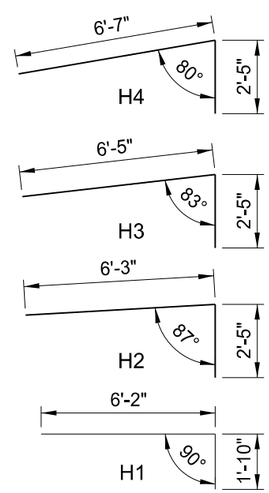

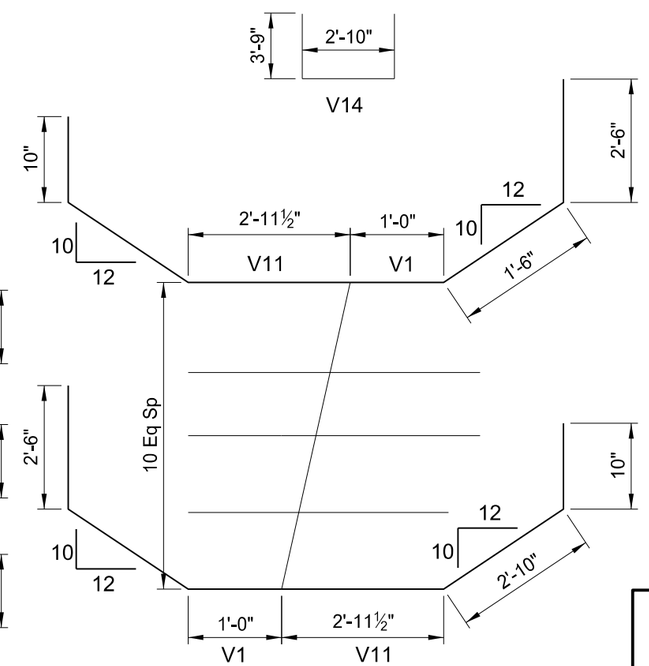

Cut Bar Set V1-V11
2 Sets Shown
Total Length 1 Bar = 10'-7½"
Total Length 2 Sets = 116'-10½"

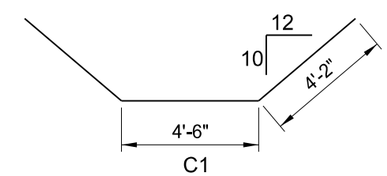

This document was originally issued and sealed by William Doerr, Registration Number PE- 7113, on 12/04/15 and the original document is stored at the North Dakota Department of Transportation

Irrigation Details

ND 58

Jct 200 to Jct 1804

STATE	PROJECT NO.	SECTION NO.	SHEET NO.
ND	SOIB-7-058(013)000	50	11

BAR LIST
Sta 26+25 Lt
Sta 26+25 Rt
Sta 106+12 Lt
(For 60" RCP)

Mark	No.	Size	Length	Shape
C1	1	5	25' - 0"	Bent
C2	1	5	25' - 3"	Bent
H1	2	5	16' - 11"	Bent
H2	2	5	14' - 5"	Bent
H3	2	5	11' - 3"	Bent
H4	2	5	8' - 2"	Bent
H5	2	5	5' - 10"	Bent
H6	2	5	17' - 8"	Bent
H7	2	5	18' - 3"	Bent
H8	2	5	18' - 4"	Bent
H9	2	5	18' - 5"	Bent
H10	2	5	18' - 7"	Bent
H11	2	5	18' - 7"	Bent
H12	2	5	16' - 5"	Str.
H13	2	5	16' - 2"	Str.
H14	2	5	11' - 7"	Str.
H15	2	5	7' - 0"	Str.
H16	2	5	16' - 6"	Str.
H17	2	5	14' - 5"	Bent
V1-V29	29	5	26' - 5"	Bent
V30	2	5	1' - 11"	Str.
V31	2	5	2' - 6"	Str.
V32	1	5	20' - 9"	Bent
V33	2	5	2' - 0"	Str.
V34	2	5	1' - 1"	Str.
V35	2	5	0' - 9"	Str.

Station & Offset	REINFORCING STEEL GRADE 60 (LBS)
Sta 26+25 Lt	1,409
Sta 26+25 Rt	1,409
Sta 106+12 Lt	1,409

BAR LIST
Sta 79+09 Rt
Sta 150+44 Lt
Sta 206+76 Lt
Sta 209+45 Rt
Sta 283+42 Rt
(For 42" or 48" RCP)

Mark	No.	Size	Length	Shape
C1	1	5	20' - 11"	Bent
C2	1	5	21' - 0"	Bent
H1	3	5	14' - 0"	Bent
H2	2	5	8' - 3"	Bent
H3	2	5	14' - 3"	Bent
H4	2	5	14' - 6"	Bent
H5	2	5	14' - 7"	Bent
H6	2	5	14' - 8"	Bent
H7	2	5	14' - 11"	Bent
H8	2	5	15' - 1"	Bent
H9	2	5	15' - 2"	Bent
H10	2	5	7' - 1"	Str.
H11	2	5	13' - 2"	Str.
H12	2	5	11' - 9"	Str.
H13	2	5	7' - 0"	Str.
H14	2	5	13' - 2"	Str.
H15	2	5	13' - 3"	Bent
V1-V23	23	5	20' - 10"	Bent
V24	2	5	2' - 6"	Str.
V25	2	5	2' - 0"	Str.
V26	1	5	17' - 9"	Bent
V27	2	5	1' - 9"	Str.
V28	2	5	1' - 0"	Str.
V29	1	5	0' - 10"	Str.

Station & Offset	REINFORCING STEEL GRADE 60 (LBS)
Sta 79+09 Rt	991
Sta 150+44 Lt	991
Sta 206+76 Lt	991
Sta 209+45 Rt	991
Sta 283+42 Rt	991

BAR LIST
Sta 166+53 Rt
(For 54" RCP ARCH)

Mark	No.	Size	Length	Shape
C1	1	5	20' - 11"	Bent
C2	1	5	20' - 11"	Bent
H1	3	5	13' - 11"	Bent
H2	2	5	10' - 3"	Bent
H3	2	5	14' - 2"	Bent
H4	2	5	14' - 3"	Bent
H5	2	5	14' - 4"	Bent
H6	2	5	14' - 6"	Bent
H7	2	5	14' - 8"	Bent
H8	2	5	14' - 11"	Bent
H9	2	5	9' - 2"	Str.
H10	2	5	12' - 10"	Str.
H11	2	5	8' - 9"	Str.
H12	2	5	12' - 10"	Str.
H13	2	5	14' - 10"	Bent
V1-V23	23	5	22' - 0"	Bent
V24	2	5	2' - 5"	Str.
V25	2	5	2' - 0"	Str.
V26	1	5	17' - 8"	Bent
V27	2	5	3' - 0"	Str.
V28	2	5	4' - 0"	Str.

Station & Offset	REINFORCING STEEL GRADE 60 (LBS)
Sta 166+53 Rt	982

BAR LIST
Sta 384+44 Lt
Sta 384+44 Rt
(For 24" RCP)

Mark	No.	Size	Length	Shape
C1	1	5	12' - 10"	Bent
C2	1	5	13' - 2"	Bent
H1	4	5	8' - 0"	Bent
H2	2	5	8' - 8"	Bent
H3	2	5	8' - 10"	Bent
H4	2	5	9' - 0"	Bent
H5	2	5	6' - 6"	Str.
H6	2	5	6' - 7"	Str.
H7	2	5	10' - 11"	Bent
V1-V11	11	5	10' - 8"	Bent
V12	2	5	2' - 3"	Str.
V13	2	5	1' - 8"	Str.
V14	1	5	10' - 4"	Bent
V15	2	5	1' - 2"	Str.
V16	2	5	0' - 10"	Str.
V17	1	5	0' - 9"	Str.

Station & Offset	REINFORCING STEEL GRADE 60 (LBS)
Sta 384+44 Lt	312
Sta 384+44 Rt	312

Note: The Reinforcing Steel Grade 60 shown in each table above is only for one end section.

DESIGN STRENGTHS:

f'c = 4,000 psi ~ Class AAE-3 Concrete
fy = 60,000 psi ~ Reinforcing Steel

Load & Resistance Factor Design

This document was originally issued and sealed by William Doerr, Registration Number PE- 7113, on 12/04/15 and the original document is stored at the North Dakota Department of Transportation

Irrigation Details

ND 58

Jct 200 to Jct 1804

STATE	PROJECT NO.	SECTION NO.	SHEET NO.
ND	SOIB-7-058(013)000	51	1

Begin Station	Begin Offset	End Station	End Offset	Pay Length LF	Pipe Conduit Pay Size Inches	Pipe Conduit Approach Pay Size Inches	Existing Material	Allowable Material	Required Diameter In	Minimum Thickness In	R1 Fabric (Pay Item) SY	End Sections (A) Begin EA	End Sections (A) End EA	End Sections Remove & Relay EA	End Sections Remove & Salv EA	End Sections Install New EA	Applicable Backfill
13+41.3	45.5 Rt	14+17.3	45.5 Rt	76		24	RCP	Reinforced Concrete Pipe - Class III **(barrell length = 76 LF)**	24			1 (Trav.)	1 (Trav.)				714.04A
								Zinc Coated Corrugated Steel (2-2/3" x 1/2" Ribs)	24	0.063							
								Aluminum Coated Corrugated Steel (Type 2)	24	0.063							
								Polymeric Coated Steel (over zinc or aluminum coated steel)	24	0.063							
								High-Density Polyethylene (HDPE)	24								
24+20.0	70.0 Lt	31+48.0	70.0 Lt	728	30		RCP	Reinforced Concrete Pipe - Class III (barrel length = 728 LF)	30							2	20-14
24+30.7	67.4 Rt	24+30.7	51.4 Rt	16	24		RCP	Reinforced Concrete Pipe - Class III (barrel length = 16 LF)	24					1			20-14
26+25.3	57.1 Lt	26+25.3	45.1 Lt	12	60		RCP	Reinforced Concrete Pipe - Class III (barrel length = 12 LF)	60					1			20-14
26+25.3	56.7 Rt	26+25.3	44.7 Rt	12	60		RCP	Reinforced Concrete Pipe - Class III (barrel length = 12 LF)	60					1			20-14
26+81.1	67.0 Lt	26+81.1	58.0 Lt	9	24		RCP	Reinforced Concrete Pipe - Class III (barrel length = 9 LF)	24						1		20-14
26+81.1	65.4 Rt	26+81.1	55.4 Rt	10	24		RCP	Reinforced Concrete Pipe - Class III (barrel length = 10 LF)	24					1			20-14
37+11.5	53.5 Rt	37+79.5	53.5 Rt	68		24	RCP	Reinforced Concrete Pipe - Class III **(barrell length = 68 LF)**	24			1 (Trav.)	1 (Trav.)				714.04A
								Zinc Coated Corrugated Steel (2-2/3" x 1/2" Ribs)	24	0.063							
								Aluminum Coated Corrugated Steel (Type 2)	24	0.063							
								Polymeric Coated Steel (over zinc or aluminum coated steel)	24	0.063							
								High-Density Polyethylene (HDPE)	24								
49+51.8	40.9 Rt	49+51.8	30.9 Rt	10	36		RCP	Reinforced Concrete Pipe - Class III (barrel length = 10 LF)	36						1	1 (Trav.)	20-14
52+51.6	52.6 Rt	53+19.6	52.6 Rt	68		24	RCP	Reinforced Concrete Pipe - Class III **(barrell length = 68 LF)**	24			1 (Trav.)	1 (Trav.)				714.04A
								Zinc Coated Corrugated Steel (2-2/3" x 1/2" Ribs)	24	0.063							
								Aluminum Coated Corrugated Steel (Type 2)	24	0.063							
								Polymeric Coated Steel (over zinc or aluminum coated steel)	24	0.063							
								High-Density Polyethylene (HDPE)	24								
53+31.4	62.0 Lt	53+31.4	56.0 Lt	6	30		RCP	Reinforced Concrete Pipe - Class III (barrel length = 6 LF)	30						1		20-14
56+51.1	62.5 Lt	56+54.0	57.3 Lt	6	30		RCP	Reinforced Concrete Pipe - Class III (barrel length = 6 LF)	30						1		20-14
56+35.0	57.5 Lt	57+29.0	57.5 Lt	94		24	RCP	Reinforced Concrete Pipe - Class III (barrel length = 86 LF)	24				1 (Trav.)		1		714.04A
51+70	Lt	56+50	Lt	480	30		RCP	Reinforced Concrete Pipe - Class III (barrel length = 480 LF)	30						1		20-14
52+44.0	Rt	66+03.0	Rt	1359	30		RCP	Reinforced Concrete Pipe - Class III (barrel length = 1359 LF)							1		20-14
66+03.0	Rt	76+29.0	Rt	1026	42		RCP	Reinforced Concrete Pipe - Class III (barrel length = 1026 LF)							1		20-14
76+25.6	70' Rt	76+43.6	70' Rt	24		18	RCP	Reinforced Concrete Pipe - Class III **(barrell length = 24 LF)**	24			1 (Trav.)	1 (Trav.)				714.04A
								Zinc Coated Corrugated Steel (2-2/3" x 1/2" Ribs)	24	0.063							
								Aluminum Coated Corrugated Steel (Type 2)	24	0.063							
								Polymeric Coated Steel (over zinc or aluminum coated steel)	24	0.063							
								High-Density Polyethylene (HDPE)	24								
76+29.0	Rt	78+83.0	Rt	248	42		RCP	Reinforced Concrete Pipe - Class III (barrel length = 248 LF)							1		20-14
78+83.0	Rt	79+06.0	Rt	36	42		RCP	Reinforced Concrete Pipe - Class III (barrel length = 36 LF) Includes 3 - 30° Bends - 8 LF EA							1		20-14
79+06.0	Rt	79+06.0	Rt	18	42		RCP	Reinforced Concrete Pipe - Class III (barrel length = 18 LF)							1		20-14
76+98.1	55.7 Rt	77+54.1	55.7 Rt	56		24	RCP	Reinforced Concrete Pipe - Class III **(barrell length = 56 LF)**	24			1 (Trav.)	1 (Trav.)				714.04A
								Zinc Coated Corrugated Steel (2-2/3" x 1/2" Ribs)	24	0.063							
								Aluminum Coated Corrugated Steel (Type 2)	24	0.063							
								Polymeric Coated Steel (over zinc or aluminum coated steel)	24	0.063							
								High-Density Polyethylene (HDPE)	24								
78+31.2	47.0 Lt	78+31.2	41.0 Lt	6	24		RCP	Reinforced Concrete Pipe - Class III (barrel length = 6 LF)	24						1	1 (Trav.)	20-14
78+31.2	45.9 Rt	78+31.2	31.9 Rt	14	24		RCP	Reinforced Concrete Pipe - Class III (barrel length = 14 LF)	24						1	1 (Trav.)	20-14
85+67.0	67.3 Rt	86+35.0	67.3 Rt	68		36	RCP	Reinforced Concrete Pipe - Class III **(barrell length = 68 LF)**	36			1	1				714.04A
91+14.7	52.9 Lt	91+11.3	31.3 Lt	14	36		RCP	Reinforced Concrete Pipe - Class III (barrel length = 14 LF)	36					1			20-14
91+27.0	49.0 Rt	91+77.0	49.0 Rt	50		24	CSP	Reinforced Concrete Pipe - Class III **(barrell length = 50 LF)**	24			1	1				714.04A
								Zinc Coated Corrugated Steel (2-2/3" x 1/2" Ribs)	24	0.063							
								Aluminum Coated Corrugated Steel (Type 2)	24	0.063							
								Polymeric Coated Steel (over zinc or aluminum coated steel)	24	0.063							
								High-Density Polyethylene (HDPE)	24								
92+16.7	45.0 Lt	92+72.7	45.0 Lt	56		24	CSP	Reinforced Concrete Pipe - Class III **(barrell length = 56 LF)**	24			1 (Trav.)	1 (Trav.)				714.04A
								Zinc Coated Corrugated Steel (2-2/3" x 1/2" Ribs)	24	0.063							
								Aluminum Coated Corrugated Steel (Type 2)	24	0.063							
								Polymeric Coated Steel (over zinc or aluminum coated steel)	24	0.063							
								High-Density Polyethylene (HDPE)	24								
106+11.6	58.6 Lt	106+11.6	44.6 Lt	14	60		RCP	Reinforced Concrete Pipe - Class III (barrel length = 14 LF)	60					1	1		20-14
119+22.0	45.2 Rt	119+68.0	45.2 Rt	46		24	RCP	Reinforced Concrete Pipe - Class III **(barrell length = 46 LF)**	24			1 (Trav.)	1 (Trav.)				714.04A
								Zinc Coated Corrugated Steel (2-2/3" x 1/2" Ribs)	24	0.063							
								Aluminum Coated Corrugated Steel (Type 2)	24	0.063							
								Polymeric Coated Steel (over zinc or aluminum coated steel)	24	0.063							
								High-Density Polyethylene (HDPE)	24								
126+82.0	43.3 Lt	127+40.0	43.3 Lt	58		30	RCP	Reinforced Concrete Pipe - Class III **(barrell length = 58 LF)**	30			1 (Trav.)	1 (Trav.)				714.04A
								Zinc Coated Corrugated Steel (2-2/3" x 1/2" Ribs)	30	0.063							
								Aluminum Coated Corrugated Steel (Type 2)	30	0.063							
								Polymeric Coated Steel (over zinc or aluminum coated steel)	30	0.063							
								High-Density Polyethylene (HDPE)	30								

This document was originally issued and sealed by William Doerr, Registration Number PE- 7113, on 12/04/15 and the original document is stored at the North Dakota Department of Transportation

Allowable Pipe List

ND 58

Jct 200 to Jct 1804

STATE	PROJECT NO.	SECTION NO.	SHEET NO.
ND	SOIB-7-058(013)000	51	2

Begin Station	Begin Offset	End Station	End Offset	Pay Length LF	Pipe Conduit Pay Size Inches	Pipe Conduit Approach Pay Size Inches	Existing Material	Allowable Material	Required Diameter In	Minimum Thickness In	R1 Fabric (Pay Item) SY	End Sections (A) Begin EA	End Sections (A) End EA	End Sections Remove & Relay EA	End Sections Remove & Salv EA	End Sections Install New EA	Applicable Backfill Detail
131+82.0	38.4 Rt	132+22.0	38.4 Rt	40		24	RCP	Reinforced Concrete Pipe - Class III **(barrell length = 40 LF)**	24			1 (Trav.)	1 (Trav.)				714.04A
								Zinc Coated Corrugated Steel (2-2/3" x 1/2" Ribs)	24	0.063							
								Aluminum Coated Corrugated Steel (Type 2)	24	0.063							
								Polymeric Coated Steel (over zinc or aluminum coated steel)	24	0.063							
								High-Density Polyethylene (HDPE)	24								
144+28.0	46.7 Rt	145+12.0	46.7 Rt	84		24	CSP	Reinforced Concrete Pipe - Class III **(barrell length = 84 LF)**	24			1 (Trav.)	1 (Trav.)				714.04A
								Zinc Coated Corrugated Steel (2-2/3" x 1/2" Ribs)	24	0.063							
								Aluminum Coated Corrugated Steel (Type 2)	24	0.063							
								Polymeric Coated Steel (over zinc or aluminum coated steel)	24	0.063							
								High-Density Polyethylene (HDPE)	24								
144+78.0	72.8 Lt	145+52.0	72.8 Lt	74		24	CSP	Reinforced Concrete Pipe - Class III **(barrell length = 74 LF)**	24			1 (Trav.)	1 (Trav.)				714.04A
								Zinc Coated Corrugated Steel (2-2/3" x 1/2" Ribs)	24	0.063							
								Aluminum Coated Corrugated Steel (Type 2)	24	0.063							
								Polymeric Coated Steel (over zinc or aluminum coated steel)	24	0.063							
								High-Density Polyethylene (HDPE)	24								
146+24.0	58.9 Rt	146+92.0	58.9 Rt	78		24	0	Reinforced Concrete Pipe - Class III **(barrell length = 78 LF)**	24			1	1				714.04A
								Zinc Coated Corrugated Steel (2-2/3" x 1/2" Ribs)	24	0.063							
								Aluminum Coated Corrugated Steel (Type 2)	24	0.063							
								Polymeric Coated Steel (over zinc or aluminum coated steel)	24	0.063							
								High-Density Polyethylene (HDPE)	24								
147+19.0	53.8 Lt	147+93.0	53.8 Lt	80		24	RCP	Reinforced Concrete Pipe - Class III **(barrell length = 80 LF)**	24			1	1				714.04A
								Zinc Coated Corrugated Steel (2-2/3" x 1/2" Ribs)	24	0.063							
								Aluminum Coated Corrugated Steel (Type 2)	24	0.063							
								Polymeric Coated Steel (over zinc or aluminum coated steel)	24	0.063							
								High-Density Polyethylene (HDPE)	24								
150+43.6	49.0 Lt	150+43.6	43.0 Lt	6	48		RCP	Reinforced Concrete Pipe - Class III (barrel length = 6 LF)	48					1	1		20-14
157+93.5	45.75 Rt	158+69.5	45.75 Rt	76		24	RCP	Reinforced Concrete Pipe - Class III **(barrell length = 76 LF)**	24			1 (Trav.)	1 (Trav.)				714.04A
								Zinc Coated Corrugated Steel (2-2/3" x 1/2" Ribs)	24	0.063							
								Aluminum Coated Corrugated Steel (Type 2)	24	0.063							
								Polymeric Coated Steel (over zinc or aluminum coated steel)	24	0.063							
								High-Density Polyethylene (HDPE)	24								
157+96.0 Temp Pipe	45.0 Rt	168+82.0 Temp Pipe	49.0 Rt	1080 Includes 1 - 5° Bend		18	N/A	Reinforced Concrete Pipe - Class III **(barrell length = 1080 LF)**	24			1 (Trav.)	1 (Trav.)				714.04A
								Zinc Coated Corrugated Steel (2-2/3" x 1/2" Ribs)	24	0.063							
								Aluminum Coated Corrugated Steel (Type 2)	24	0.063							
								Polymeric Coated Steel (over zinc or aluminum coated steel)	24	0.063							
								High-Density Polyethylene (HDPE)	24								
158+11.0	76.0 Rt	166+53.0	66' Rt	828	Arch 65x40			Reinforced Concrete Pipe - Class III (barrel length = 827 LF)	Arch 65x40								20-14
168+81.3	39.8 Lt	168+81.3	39.8 Lt	0	24		RCP	Reinforced Concrete Pipe - Class III (barrel length = 0 LF)	24						1	1 (Trav.)	20-14
168+81.3	41.1 Rt	168+81.3	33.1 Rt	8	24		RCP	Reinforced Concrete Pipe - Class III (barrel length = 8 LF)	24						1	1 (Trav.)	20-14
172+31.5	55.6 Rt	173+01.5	55.6 Rt	70		24	RCP	Reinforced Concrete Pipe - Class III **(barrell length = 70 LF)**	24			1	1				714.04A
								Zinc Coated Corrugated Steel (2-2/3" x 1/2" Ribs)	24	0.063							
								Aluminum Coated Corrugated Steel (Type 2)	24	0.063							
								Polymeric Coated Steel (over zinc or aluminum coated steel)	24	0.063							
								High-Density Polyethylene (HDPE)	24								
184+04.5	60.0 Rt	185+34.5	60.0 Rt	130		24	RCP	Reinforced Concrete Pipe - Class III **(barrell length = 130 LF)**	24			1	1				714.04A
								Zinc Coated Corrugated Steel (2-2/3" x 1/2" Ribs)	24	0.063							
								Aluminum Coated Corrugated Steel (Type 2)	24	0.063							
								Polymeric Coated Steel (over zinc or aluminum coated steel)	24	0.063							
								High-Density Polyethylene (HDPE)	24								
184+85.2	57.0 Lt	185+89.2	57.0 Lt	104		24	RCP	Reinforced Concrete Pipe - Class III **(barrell length = 104 LF)**	24			1	1				714.04A
								Zinc Coated Corrugated Steel (2-2/3" x 1/2" Ribs)	24	0.063							
								Aluminum Coated Corrugated Steel (Type 2)	24	0.063							
								Polymeric Coated Steel (over zinc or aluminum coated steel)	24	0.063							
								High-Density Polyethylene (HDPE)	24								
196+48.5	44.0 Rt	197+00.5	44.0 Rt	52		24	RCP	Reinforced Concrete Pipe - Class III **(barrell length = 52 LF)**	24			1 (Trav.)	1 (Trav.)				714.04A
								Zinc Coated Corrugated Steel (2-2/3" x 1/2" Ribs)	24	0.063							
								Aluminum Coated Corrugated Steel (Type 2)	24	0.063							
								Polymeric Coated Steel (over zinc or aluminum coated steel)	24	0.063							
								High-Density Polyethylene (HDPE)	24								
198+23.0	40.2 Lt	198+23.0	40.2 Lt	0	24		RCP	Reinforced Concrete Pipe - Class III (barrel length = 0 LF)	24						1	1 (Trav.)	20-14
198+23.0	46.4 Rt	198+23.0	40.4 Rt	6	24		RCP	Reinforced Concrete Pipe - Class III (barrel length = 6 LF)	24						1	1 (Trav.)	20-14
198+36.6	40.1 Lt	198+36.6	40.1 Lt	0	24		RCP	Reinforced Concrete Pipe - Class III (barrel length = 0 LF)	24						1	1 (Trav.)	20-14
198+36.6	46.4 Rt	198+36.6	40.4 Rt	6	24		RCP	Reinforced Concrete Pipe - Class III (barrel length = 6 LF)	24						1	1 (Trav.)	20-14
198+41.5	52.5 Rt	199+03.5	52.5 Rt	62		24	RCP	Reinforced Concrete Pipe - Class III **(barrell length = 62 LF)**	24			1 (Trav.)	1 (Trav.)				714.04A
								Zinc Coated Corrugated Steel (2-2/3" x 1/2" Ribs)	24	0.063							
								Aluminum Coated Corrugated Steel (Type 2)	24	0.063							
								Polymeric Coated Steel (over zinc or aluminum coated steel)	24	0.063							
								High-Density Polyethylene (HDPE)	24								

This document was originally issued and sealed by William Doerr, Registration Number PE- 7113, on 12/04/15 and the original document is stored at the North Dakota Department of Transportation

Allowable Pipe List

ND 58

Jct 200 to Jct 1804

STATE	PROJECT NO.	SECTION NO.	SHEET NO.
ND	SOIB-7-058(013)000	51	3

Begin Station	Begin Offset	End Station	End Offset	Pay Length LF	Pipe Conduit Pay Size Inches	Pipe Conduit Approach Pay Size Inches	Existing Material	Allowable Material	Required Diameter In	Minimum Thickness In	R1 Fabric (Pay Item) SY	End Sections (A) Begin EA	End Sections (A) End EA	End Sections Remove & Relay EA	End Sections Remove & Salv EA	End Sections Install New EA	Applicable Backfill Detail
200+42.5	55.5 Rt	201+18.5	55.5 Rt	76		24	RCP	Reinforced Concrete Pipe - Class III **(barrell length = 76 LF)**	24			1 (Trav.)	1 (Trav.)				714.04A
								Zinc Coated Corrugated Steel (2-2/3" x 1/2" Ribs)	24	0.063							
								Aluminum Coated Corrugated Steel (Type 2)	24	0.063							
								Polymeric Coated Steel (over zinc or aluminum coated steel)	24	0.063							
								High-Density Polyethylene (HDPE)	24								
206+73.9	55.0 Lt	207+00.8	41.7 Lt	30	48		RCP	Reinforced Concrete Pipe - Class III (barrel length = 30 LF)	48					1			20-14
209+45.3	78.0 Rt	208+69.9	41.5 Rt	86	48		RCP	Reinforced Concrete Pipe - Class III (barrel length = 86 LF)	48					1			20-14
208+25.2	44.0 Lt	209+01.2	44.0 Lt	76		24	PVC	Reinforced Concrete Pipe - Class III **(barrell length = 76 LF)**	24			1 (Trav.)	1 (Trav.)				714.04A
								Zinc Coated Corrugated Steel (2-2/3" x 1/2" Ribs)	24	0.063							
								Aluminum Coated Corrugated Steel (Type 2)	24	0.063							
								Polymeric Coated Steel (over zinc or aluminum coated steel)	24	0.063							
								High-Density Polyethylene (HDPE)	24								
219+40.3	45.6 Lt	219+40.3	45.6 Lt	0	24		RCP	Reinforced Concrete Pipe - Class III (barrel length = 0 LF)	24						1	1 (Trav.)	20-14
219+40.3	47.0 Rt	219+40.3	35.0 Rt	12	24		RCP	Reinforced Concrete Pipe - Class III (barrel length = 12 LF)	24						1	1 (Trav.)	20-14
228+65.0	66.0 Rt	229+15.0	66.0 Rt	50		24	CSP	Reinforced Concrete Pipe - Class III **(barrell length = 50 LF)**	24			1	1				714.04A
								Zinc Coated Corrugated Steel (2-2/3" x 1/2" Ribs)	24	0.063							
								Aluminum Coated Corrugated Steel (Type 2)	24	0.063							
								Polymeric Coated Steel (over zinc or aluminum coated steel)	24	0.063							
								High-Density Polyethylene (HDPE)	24								
237+44.8	54.7 Lt	238+32.8	54.7 Lt	88		24	RCP	Reinforced Concrete Pipe - Class III **(barrell length = 88 LF)**	24			1	1				714.04A
								Zinc Coated Corrugated Steel (2-2/3" x 1/2" Ribs)	24	0.063							
								Aluminum Coated Corrugated Steel (Type 2)	24	0.063							
								Polymeric Coated Steel (over zinc or aluminum coated steel)	24	0.063							
								High-Density Polyethylene (HDPE)	24								
237+59.5	66.5 Rt	238+15.5	66.5 Rt	56		24	RCP	Reinforced Concrete Pipe - Class III **(barrell length = 56 LF)**	24			1	1				714.04A
								Zinc Coated Corrugated Steel (2-2/3" x 1/2" Ribs)	24	0.063							
								Aluminum Coated Corrugated Steel (Type 2)	24	0.063							
								Polymeric Coated Steel (over zinc or aluminum coated steel)	24	0.063							
								High-Density Polyethylene (HDPE)	24								
240+20.7	48.5 Lt	240+20.7	40.5 Lt	8	30		RCP	Reinforced Concrete Pipe - Class III (barrel length = 8 LF)	30						1	1 (Trav.)	20-14
240+20.7	57.8 Rt	240+20.7	41.8 Rt	16	30		RCP	Reinforced Concrete Pipe - Class III (barrel length = 16 LF)	30						1	1 (Trav.)	20-14
248+72.5	40.0 Lt	248+72.5	40.0 Lt	0	24		RCP	Reinforced Concrete Pipe - Class III (barrel length = 0 LF)	24						1	1 (Trav.)	20-14
248+72.5	52.3 Rt	248+72.5	40.3 Rt	12	24		RCP	Reinforced Concrete Pipe - Class III (barrel length = 12 LF)	24						1	1 (Trav.)	20-14
263+96.5	49.0 Lt	264+68.5	49.0 Lt	72		24	RCP	Reinforced Concrete Pipe - Class III **(barrell length = 72 LF)**	24			1 (Trav.)	1 (Trav.)				714.04A
								Zinc Coated Corrugated Steel (2-2/3" x 1/2" Ribs)	24	0.063							
								Aluminum Coated Corrugated Steel (Type 2)	24	0.063							
								Polymeric Coated Steel (over zinc or aluminum coated steel)	24	0.063							
								High-Density Polyethylene (HDPE)	24								
263+93.5	62.0 Rt	264+69.5	62.0 Rt	76		24	RCP	Reinforced Concrete Pipe - Class III **(barrell length = 76 LF)**	24			1 (Trav.)	1 (Trav.)				714.04A
								Zinc Coated Corrugated Steel (2-2/3" x 1/2" Ribs)	24	0.063							
								Aluminum Coated Corrugated Steel (Type 2)	24	0.063							
								Polymeric Coated Steel (over zinc or aluminum coated steel)	24	0.063							
								High-Density Polyethylene (HDPE)	24								
277+68.1	56.0 Lt	278+34.1	56.0 Lt	66		24	RCP	Reinforced Concrete Pipe - Class III **(barrell length = 66 LF)**	24			1	1				714.04A
								Zinc Coated Corrugated Steel (2-2/3" x 1/2" Ribs)	24	0.063							
								Aluminum Coated Corrugated Steel (Type 2)	24	0.063							
								Polymeric Coated Steel (over zinc or aluminum coated steel)	24	0.063							
								High-Density Polyethylene (HDPE)	24								
277+75.0	80.0 Rt	278+29.0	80.0 Rt	54		24	RCP	Reinforced Concrete Pipe - Class III **(barrell length = 54 LF)**	24			1	1				714.04A
								Zinc Coated Corrugated Steel (2-2/3" x 1/2" Ribs)	24	0.063							
								Aluminum Coated Corrugated Steel (Type 2)	24	0.063							
								Polymeric Coated Steel (over zinc or aluminum coated steel)	24	0.063							
								High-Density Polyethylene (HDPE)	24								
283+42.0	64.3 Rt	283+42.0	48.3 Rt	16	48		RCP	Reinforced Concrete Pipe - Class III (barrel length = 16 LF)	48					1			20-14
290+66.5	56.0 Lt	291+18.5	56.0 Lt	52		24	RCP	Reinforced Concrete Pipe - Class III **(barrell length = 52 LF)**	24			1	1				714.04A
								Zinc Coated Corrugated Steel (2-2/3" x 1/2" Ribs)	24	0.063							
								Aluminum Coated Corrugated Steel (Type 2)	24	0.063							
								Polymeric Coated Steel (over zinc or aluminum coated steel)	24	0.063							
								High-Density Polyethylene (HDPE)	24								
290+53.5	60.0 Rt	291+25.5	60.0 Rt	72		24	RCP	Reinforced Concrete Pipe - Class III **(barrell length = 72 LF)**	24			1 (Trav.)	1 (Trav.)				714.04A
								Zinc Coated Corrugated Steel (2-2/3" x 1/2" Ribs)	24	0.063							
								Aluminum Coated Corrugated Steel (Type 2)	24	0.063							
								Polymeric Coated Steel (over zinc or aluminum coated steel)	24	0.063							
								High-Density Polyethylene (HDPE)	24								
300+93.5	70.0 Rt	301+75.5	70.0 Rt	82		24	RCP	Reinforced Concrete Pipe - Class III **(barrell length = 82 LF)**	24			1	1				714.04A
								Zinc Coated Corrugated Steel (2-2/3" x 1/2" Ribs)	24	0.063							
								Aluminum Coated Corrugated Steel (Type 2)	24	0.063							
								Polymeric Coated Steel (over zinc or aluminum coated steel)	24	0.063							
								High-Density Polyethylene (HDPE)	24								

This document was originally issued and sealed by William Doerr, Registration Number PE- 7113, on 12/04/15 and the original document is stored at the North Dakota Department of Transportation

Allowable Pipe List

ND 58

Jct 200 to Jct 1804

STATE	PROJECT NO.	SECTION NO.	SHEET NO.
ND	SOIB-7-058(013)000	51	4

Begin Station	Begin Offset	End Station	End Offset	Pay Length LF	Pipe Conduit Pay Size Inches	Pipe Conduit Approach Pay Size Inches	Existing Material	Allowable Material	Required Diameter In	Minimum Thickness In	R1 Fabric (Pay Item) SY	End Sections (A) Begin EA	End Sections (A) End EA	End Sections Remove & Relay EA	End Sections Remove & Salv EA	End Sections Install New EA	Applicable Backfill Detail
301+95.7	46.7 Lt	301+95.7	46.7 Lt	0	24		RCP	Reinforced Concrete Pipe - Class III (barrel length = 0 LF)	24						1	1 (Trav.)	20-14
301+95.7	66.3 Rt	301+95.7	48.3 Rt	18	24		RCP	Reinforced Concrete Pipe - Class III (barrel length = 18 LF)	24					1		22.5° Bnd	20-14
308+14.5	72.0 Rt	308+64.5	72.0 Rt	50		24	RCP	Reinforced Concrete Pipe - Class III **(barrell length = 50 LF)**	24			1	1				714.04A
								Zinc Coated Corrugated Steel (2-2/3" x 1/2" Ribs)	24	0.063							
								Aluminum Coated Corrugated Steel (Type 2)	24	0.063							
								Polymeric Coated Steel (over zinc or aluminum coated steel)	24	0.063							
								High-Density Polyethylene (HDPE)	24								
316+90.6	52.9 Lt	316+90.6	52.9 Lt	0	24		RCP	Reinforced Concrete Pipe - Class III (barrel length = 0 LF)	24						1	1 (Trav.)	20-14
316+90.6	53.1 Rt	316+90.6	53.1 Rt	0	24		RCP	Reinforced Concrete Pipe - Class III (barrel length = 0 LF)	24						1	1 (Trav.)	20-14
316+99.0	56.0 Lt	317+67.0	56.0 Lt	68		24	RCP	Reinforced Concrete Pipe - Class III **(barrell length = 68 LF)**	24			1	1				714.04A
								Zinc Coated Corrugated Steel (2-2/3" x 1/2" Ribs)	24	0.063							
								Aluminum Coated Corrugated Steel (Type 2)	24	0.063							
								Polymeric Coated Steel (over zinc or aluminum coated steel)	24	0.063							
								High-Density Polyethylene (HDPE)	24								
317+07.5	73.0 Rt	317+57.5	73.0 Rt	50		24	RCP	Reinforced Concrete Pipe - Class III **(barrell length = 50 LF)**	24			1	1				714.04A
								Zinc Coated Corrugated Steel (2-2/3" x 1/2" Ribs)	24	0.063							
								Aluminum Coated Corrugated Steel (Type 2)	24	0.063							
								Polymeric Coated Steel (over zinc or aluminum coated steel)	24	0.063							
								High-Density Polyethylene (HDPE)	24								
339+17.5	56.0 Lt	339+55.5	56.0 Lt	38		24	RCP	Reinforced Concrete Pipe - Class III **(barrell length = 38 LF)**	24			1	1				714.04A
								Zinc Coated Corrugated Steel (2-2/3" x 1/2" Ribs)	24	0.063							
								Aluminum Coated Corrugated Steel (Type 2)	24	0.063							
								Polymeric Coated Steel (over zinc or aluminum coated steel)	24	0.063							
								High-Density Polyethylene (HDPE)	24								
349+26.0	47.5 Lt	350+10.0	47.5 Lt	84		24	CSP	Reinforced Concrete Pipe - Class III **(barrell length = 84 LF)**	24			1 (Trav.)	1 (Trav.)				714.04A
								Zinc Coated Corrugated Steel (2-2/3" x 1/2" Ribs)	24	0.063							
								Aluminum Coated Corrugated Steel (Type 2)	24	0.063							
								Polymeric Coated Steel (over zinc or aluminum coated steel)	24	0.063							
								High-Density Polyethylene (HDPE)	24								
349+36.5	44.6 Rt	350+00.5	44.6 Rt	64		24	CSP	Reinforced Concrete Pipe - Class III **(barrell length = 64 LF)**	24			1 (Trav.)	1 (Trav.)				714.04A
								Zinc Coated Corrugated Steel (2-2/3" x 1/2" Ribs)	24	0.063							
								Aluminum Coated Corrugated Steel (Type 2)	24	0.063							
								Polymeric Coated Steel (over zinc or aluminum coated steel)	24	0.063							
								High-Density Polyethylene (HDPE)	24								
354+12.3	39.9 Lt	354+12.3	39.9 Lt	0	24		RCP	Reinforced Concrete Pipe - Class III (barrel length = 0 LF)	24						1	1 (Trav.)	20-14
354+12.3	40.6 Rt	354+12.3	40.6 Rt	0	24		RCP	Reinforced Concrete Pipe - Class III (barrel length = 0 LF)	24						1	1 (Trav.)	20-14
356+47.5	43.5 Lt	357+19.5	43.5 Lt	72		24	CSP	Reinforced Concrete Pipe - Class III **(barrell length = 72 LF)**	24			1 (Trav.)	1 (Trav.)				714.04A
								Zinc Coated Corrugated Steel (2-2/3" x 1/2" Ribs)	24	0.063							
								Aluminum Coated Corrugated Steel (Type 2)	24	0.063							
								Polymeric Coated Steel (over zinc or aluminum coated steel)	24	0.063							
								High-Density Polyethylene (HDPE)	24								
356+82.3	44.0 Rt	357+44.3	44.0 Rt	62		24	CSP	Reinforced Concrete Pipe - Class III **(barrell length = 62 LF)**	24			1 (Trav.)	1 (Trav.)				714.04A
								Zinc Coated Corrugated Steel (2-2/3" x 1/2" Ribs)	24	0.063							
								Aluminum Coated Corrugated Steel (Type 2)	24	0.063							
								Polymeric Coated Steel (over zinc or aluminum coated steel)	24	0.063							
								High-Density Polyethylene (HDPE)	24								
360+63.8	53.0 Lt	360+63.8	41.0 Lt	12	72		RCP	Reinforced Concrete Pipe - Class III (barrel length = 12 LF)	72					1			20-14
360+63.8	52.3 Rt	360+63.8	40.3 Rt	12	72		RCP	Reinforced Concrete Pipe - Class III (barrel length = 12 LF)	72					1			20-14
362+09.0	60.5 Lt	362+79.0	60.5 Lt	70		24	CSP	Reinforced Concrete Pipe - Class III **(barrell length = 70 LF)**	24			1	1				714.04A
								Zinc Coated Corrugated Steel (2-2/3" x 1/2" Ribs)	24	0.063							
								Aluminum Coated Corrugated Steel (Type 2)	24	0.063							
								Polymeric Coated Steel (over zinc or aluminum coated steel)	24	0.063							
								High-Density Polyethylene (HDPE)	24								
384+43.9	39.9 Lt	384+43.9	39.9 Lt	6	24		RCP	Reinforced Concrete Pipe - Class III (barrel length = 6 LF)	24						1	1 (Trav.)	20-14
384+43.9	40.4 Rt	384+43.9	40.4 Rt	6	24		RCP	Reinforced Concrete Pipe - Class III (barrel length = 6 LF)	24						1	1 (Trav.)	20-14
397+10.5	60.0 Rt	397+60.5	60.0 Rt	50		24	CSP	Reinforced Concrete Pipe - Class III **(barrell length = 50 LF)**	24			1	1				714.04A
								Zinc Coated Corrugated Steel (2-2/3" x 1/2" Ribs)	24	0.063							
								Aluminum Coated Corrugated Steel (Type 2)	24	0.063							
								Polymeric Coated Steel (over zinc or aluminum coated steel)	24	0.063							
								High-Density Polyethylene (HDPE)	24								
397+90.0	50.9 Lt	397+94.3	41.9 Lt	10	60		RCP	Reinforced Concrete Pipe - Class III (barrel length = 10 LF)	60					1			20-14
398+41.9	57.2 Rt	389+41.3	55.2 Rt	16	60		RCP	Reinforced Concrete Pipe - Class III (barrel length = 16 LF)	60					1			20-14
404+19.5	44.0 Lt	404+55.5	44.0 Lt	46		24	CSP	Reinforced Concrete Pipe - Class III **(barrell length = 36 LF)**	24			1 (Trav.)	1 (Trav.)				714.04A
								Zinc Coated Corrugated Steel (2-2/3" x 1/2" Ribs)	24	0.063							
								Aluminum Coated Corrugated Steel (Type 2)	24	0.063							
								Polymeric Coated Steel (over zinc or aluminum coated steel)	24	0.063							
								High-Density Polyethylene (HDPE)	24								

This document was originally issued and sealed by William Doerr, Registration Number PE- 7113, on 12/04/15 and the original document is stored at the North Dakota Department of Transportation

Allowable Pipe List

ND 58

Jct 200 to Jct 1804

STATE	PROJECT NO.	SECTION NO.	SHEET NO.
ND	SOIB-7-058(013)000	51	5

Begin Station	Begin Offset	End Station	End Offset	Pay Length LF	Pipe Conduit Pay Size Inches	Pipe Conduit Approach Pay Size Inches	Existing Material	Allowable Material	Required Diameter In	Minimum Thickness In	R1 Fabric (Pay Item) SY	End Sections (A) Begin EA	End Sections (A) End EA	End Sections Remove & Relay EA	End Sections Remove & Salv EA	End Sections Install New EA	Applicable Backfill Detail
419+44.7	55.4 Lt	419+44.7	45.4 Lt	10	24		RCP	Reinforced Concrete Pipe - Class III (barrel length = 10 LF)	24						1	1 (Trav.)	20-14
419+44.7	51.8 Rt	419+44.7	45.8 Rt	6	24		RCP	Reinforced Concrete Pipe - Class III (barrel length = 10 LF)	24					1			20-14
424+95.0	57.2 Rt	424+95.0	42.2 Rt	15	12		RCP	12IN Ag Irrigation Line (barrel length = 15 LF)	12								20-14
425+08.0	64.7 Lt	425+08.0	64.7 Lt	0	24		RCP	Reinforced Concrete Pipe - Class III (barrel length = 0 LF)	24						1	1 (Trav.)	20-14
425+30.0	50.0 Lt	426+10.0	50.0 Lt	80		24	CSP	Reinforced Concrete Pipe - Class III **(barrell length = 100 LF)**	24			1 (Trav.)	1 (Trav.)				714.04A
								Zinc Coated Corrugated Steel (2-2/3" x 1/2" Ribs)	24	0.063							
								Aluminum Coated Corrugated Steel (Type 2)	24	0.063							
								Polymeric Coated Steel (over zinc or aluminum coated steel)	24	0.063							
								High-Density Polyethylene (HDPE)	24								
425+39.5	50.0 Rt	425+87.5	50.0 Rt	48		24	CSP	Reinforced Concrete Pipe - Class III **(barrell length = 48 LF)**	24			1 (Trav.)	1 (Trav.)				714.04A
								Zinc Coated Corrugated Steel (2-2/3" x 1/2" Ribs)	24	0.063							
								Aluminum Coated Corrugated Steel (Type 2)	24	0.063							
								Polymeric Coated Steel (over zinc or aluminum coated steel)	24	0.063							
								High-Density Polyethylene (HDPE)	24								
435+37.6	41.3 Lt	435+37.6	41.3 Lt	0	24		RCP	Reinforced Concrete Pipe - Class III (barrel length = 0 LF)	24						1	1 (Trav.)	20-14
434+52.6	40.9 Rt	434+52.6	40.9 Rt	0	24		RCP	Reinforced Concrete Pipe - Class III (barrel length = 0 LF)	24						1	1 (Trav.)	20-14
436+34.9	58.2 Lt	436+34.9	40.2 Lt	18	72		RCP	Reinforced Concrete Pipe - Class III (barrel length = 18 LF)	72					1			20-14
436+34.9	52.5 Rt	436+34.9	52.5 Rt	12	72		RCP	Reinforced Concrete Pipe - Class III (barrel length = 12 LF)	72					1			20-14
438+22.5	87.3 Lt	438+20.6	81.6 Lt	6	30		RCP	Reinforced Concrete Pipe - Class III (barrel length = 6 LF)	30					1			20-14
438+28.8	85.1 Lt	438+26.9	79.5 Lt	6	30		RCP	Reinforced Concrete Pipe - Class III (barrel length = 6 LF)	30					1			20-14
455+75.0	48.0 Rt	456+89.1	75.4 Rt	118		36	0	Reinforced Concrete Pipe - Class III (**barrell length = 118 LF**)	36			1	1				714.04A
								Zinc Coated Corrugated Steel (2-2/3" x 1/2" Ribs)	36	0.063							
								Aluminum Coated Corrugated Steel (Type 2)	36	0.063							
								Polymeric Coated Steel (over zinc or aluminum coated steel)	36	0.063							
								High-Density Polyethylene (HDPE)	36								
461+97.5	60.0 Lt	462+41.5	60.0 Lt	44		24	CSP	Reinforced Concrete Pipe - Class III **(barrell length = 44 LF)**	24			1	1				714.04A
								Zinc Coated Corrugated Steel (2-2/3" x 1/2" Ribs)	24	0.063							
								Aluminum Coated Corrugated Steel (Type 2)	24	0.063							
								Polymeric Coated Steel (over zinc or aluminum coated steel)	24	0.063							
								High-Density Polyethylene (HDPE)	24								
461+98.5	60.0 Rt	462+42.5	60.0 Rt	44		24	CSP	Reinforced Concrete Pipe - Class III **(barrell length = 44 LF)**	24			1	1				714.04A
								Zinc Coated Corrugated Steel (2-2/3" x 1/2" Ribs)	24	0.063							
								Aluminum Coated Corrugated Steel (Type 2)	24	0.063							
								Polymeric Coated Steel (over zinc or aluminum coated steel)	24	0.063							
								High-Density Polyethylene (HDPE)	24								
463+78.3	45.0 Rt	464+22.3	45.0 Rt	44		24	0	Reinforced Concrete Pipe - Class III **(barrell length = 44 LF)**	24			1 (Trav.)	1 (Trav.)				714.04A
								Zinc Coated Corrugated Steel (2-2/3" x 1/2" Ribs)	24	0.063							
								Aluminum Coated Corrugated Steel (Type 2)	24	0.063							
								Polymeric Coated Steel (over zinc or aluminum coated steel)	24	0.063							
								High-Density Polyethylene (HDPE)	24								
464+94.5	41.1 Lt	464+94.5	41.1 Lt	0	30		RCP	Reinforced Concrete Pipe - Class III (barrel length = 0 LF)	30						1	1 (Trav.)	20-14
464+94.5	41.7 Rt	464+94.5	41.7 Rt	0	30		RCP	Reinforced Concrete Pipe - Class III (barrel length = 0 LF)	30						1	1 (Trav.)	20-14
475+44.6	50.9 Lt	475+44.6	44.9 Lt	6	18		RCP	Reinforced Concrete Pipe - Class III (barrel length = 6 LF)	18					1			20-14
475+44.6	60.6 Rt	475+44.6	52.6 Rt	8	18		RCP	Reinforced Concrete Pipe - Class III (barrel length = 8 LF)	18					1			20-14

This document was originally issued and sealed by William Doerr, Registration Number PE- 7113, on 12/04/15 and the original document is stored at the North Dakota Department of Transportation

Allowable Pipe List

ND 58

Jct 200 to Jct 1804

STATE	PROJECT NO.	SECTION NO.	SHEET NO.
ND	SOIB-7-058(013)000	60	1

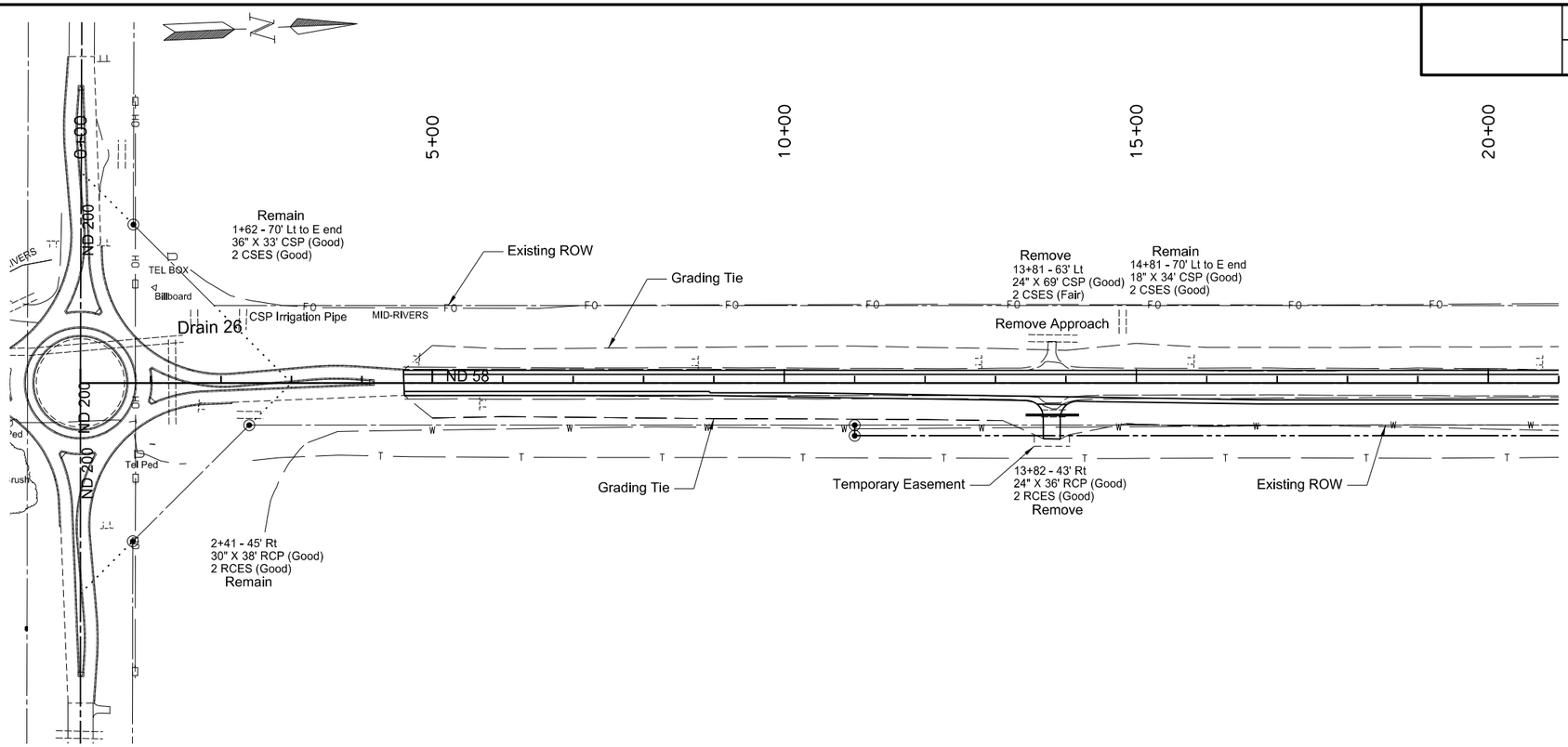

SPEC	CODE	BID ITEM	QUANTITY	UNIT
202	0174	REMOVAL OF PIPE ALL TYPES AND SIZES		
		13+82 Rt	36	LF
		13+81 Lt	69	LF
714	4106	PIPE CONDUIT 24IN-APPROACH		
		13+81 Rt	76	LF

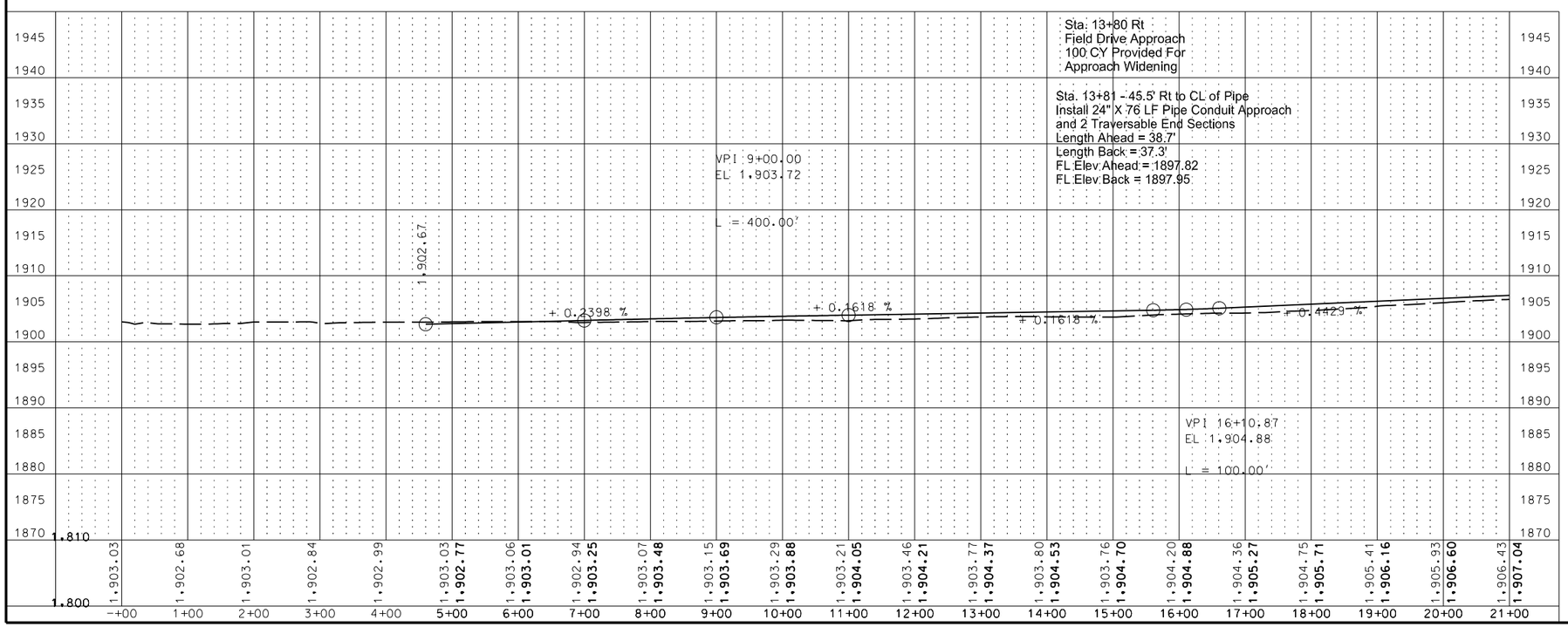

This document was originally issued and sealed by William Doerr, Registration Number PE- 7113, on 12/04/15 and the original document is stored at the North Dakota Department of Transportation

Plan and Profile

ND 58

Jct 200 to Jct 1804

STATE	PROJECT NO.	SECTION NO.	SHEET NO.
ND	SOIB-7-058(013)000	60	2

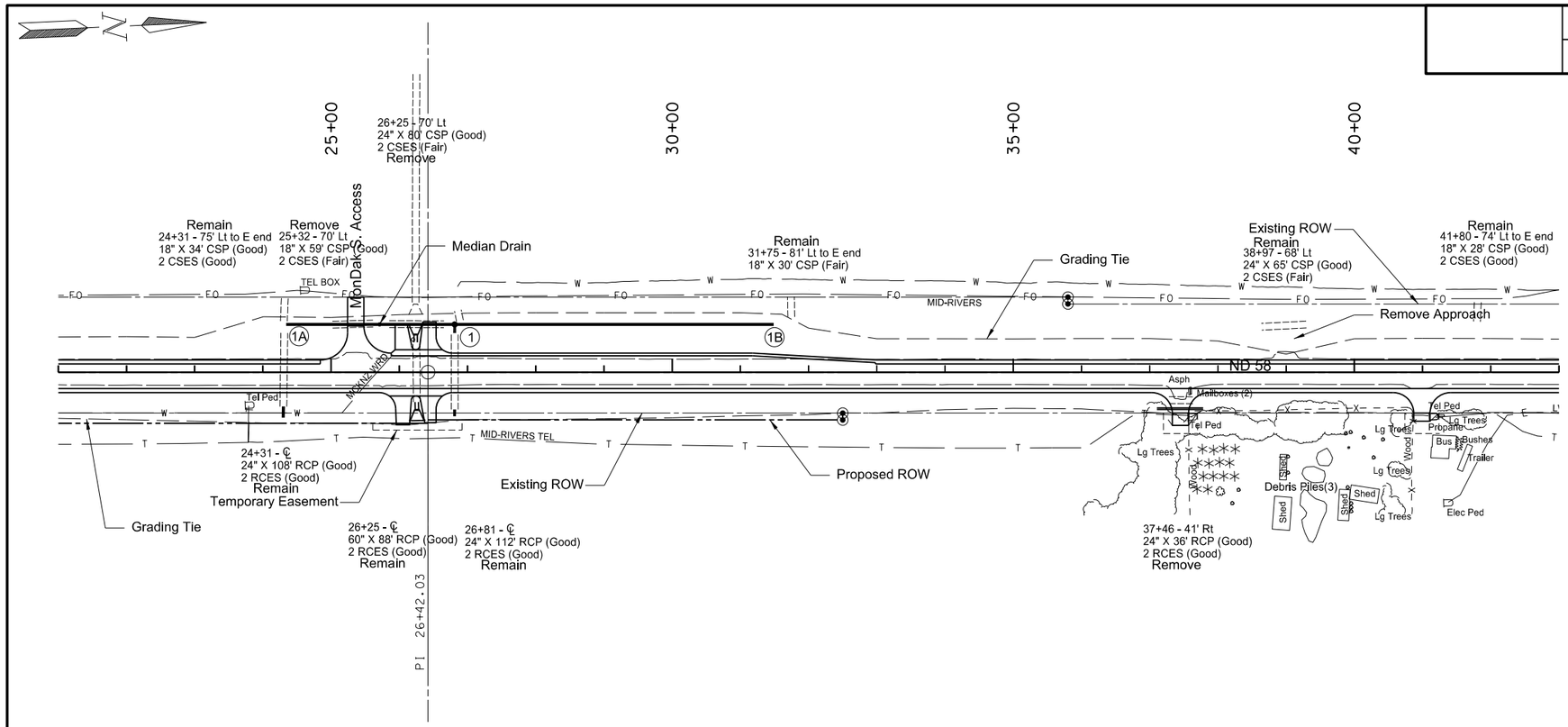

SPEC	CODE	BID ITEM	QUANTITY	UNIT
202	0112	REMOVAL OF CONCRETE		
		26+25 Lt (Irrigation End Structure)	24	SY
		26+25 Rt (Irrigation End Structure)	24	SY
202	0169	REMOVAL OF END SECTION - ALL TYPES & SIZES		
		26+81 ℄ Pipe - Lt	1	EA
202	0174	REMOVAL OF PIPE ALL TYPES AND SIZES		
		25+32 Lt	59	LF
		26+25 Lt	80	LF
		38+97 Lt	65	LF
		37+46 Rt	36	LF
714	0615	PIPE CONC REINF 24IN CL III		
		24+31 ℄ Pipe - Rt	16	LF
714	0615	PIPE CONC REINF 24IN CL III (Irrigation)		
		26+81 ℄ Pipe - Lt	9	LF
		26+81 ℄ Pipe - Rt	10	LF
		25+71 Riser - Lt	5	LF
714	0820	PIPE CONC REINF 30IN CL III (Irrigation)		
		24+32 - Lt to 31+48 - Lt	716	LF
714	1310	PIPE CONC REINF 60IN CL III		
		26+25 ℄ Pipe - Rt	12	LF
		26+25 ℄ Pipe - Lt	12	LF
714	4106	PIPE CONDUIT 24IN-APPROACH		
		37+45 Rt	68	LF
714	9660	REMOVE AND RELAY END SECTION - ALL TYPES & SIZES		
		24+31 ℄ Pipe - Rt	1	EA
		26+25 ℄ Pipe - Rt	1	EA
		26+25 ℄ Pipe - Lt	1	EA
		26+81 ℄ Pipe - Rt	1	EA
722	0120	MANHOLE 72IN (Irrigation)		
		26+81 Lt	1	EA
722	1120	MANHOLE RISER 72IN (Irrigation)		
		26+81 Lt	7.23	LF
722	4565	MEDIAN DRAIN PRECAST CONCRETE - TYPE A		
		25+71 Lt	1	EA

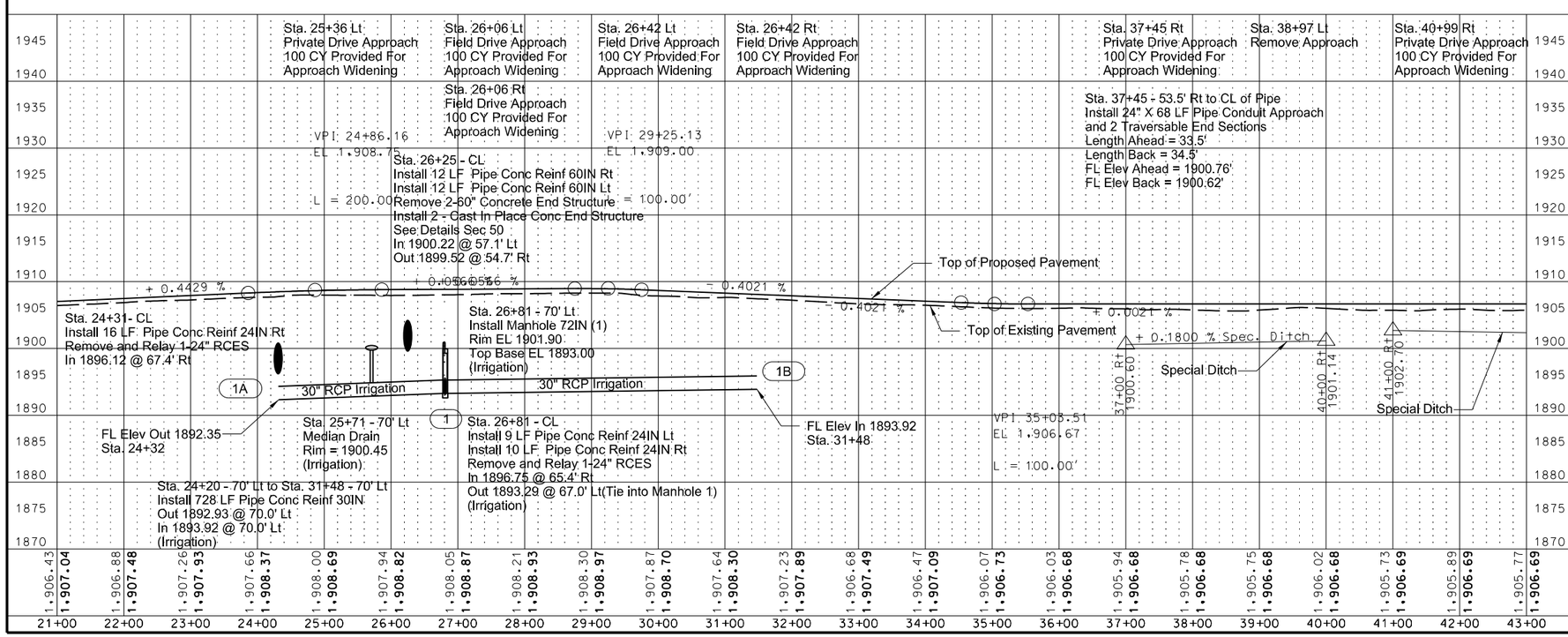

This document was originally issued and sealed by William Doerr, Registration Number PE- 7113, on 12/04/15 and the original document is stored at the North Dakota Department of Transportation

Plan and Profile

ND 58

Jct 200 to Jct 1804

STATE	PROJECT NO.	SECTION NO.	SHEET NO.
ND	SOIB-7-058(013)000	60	3

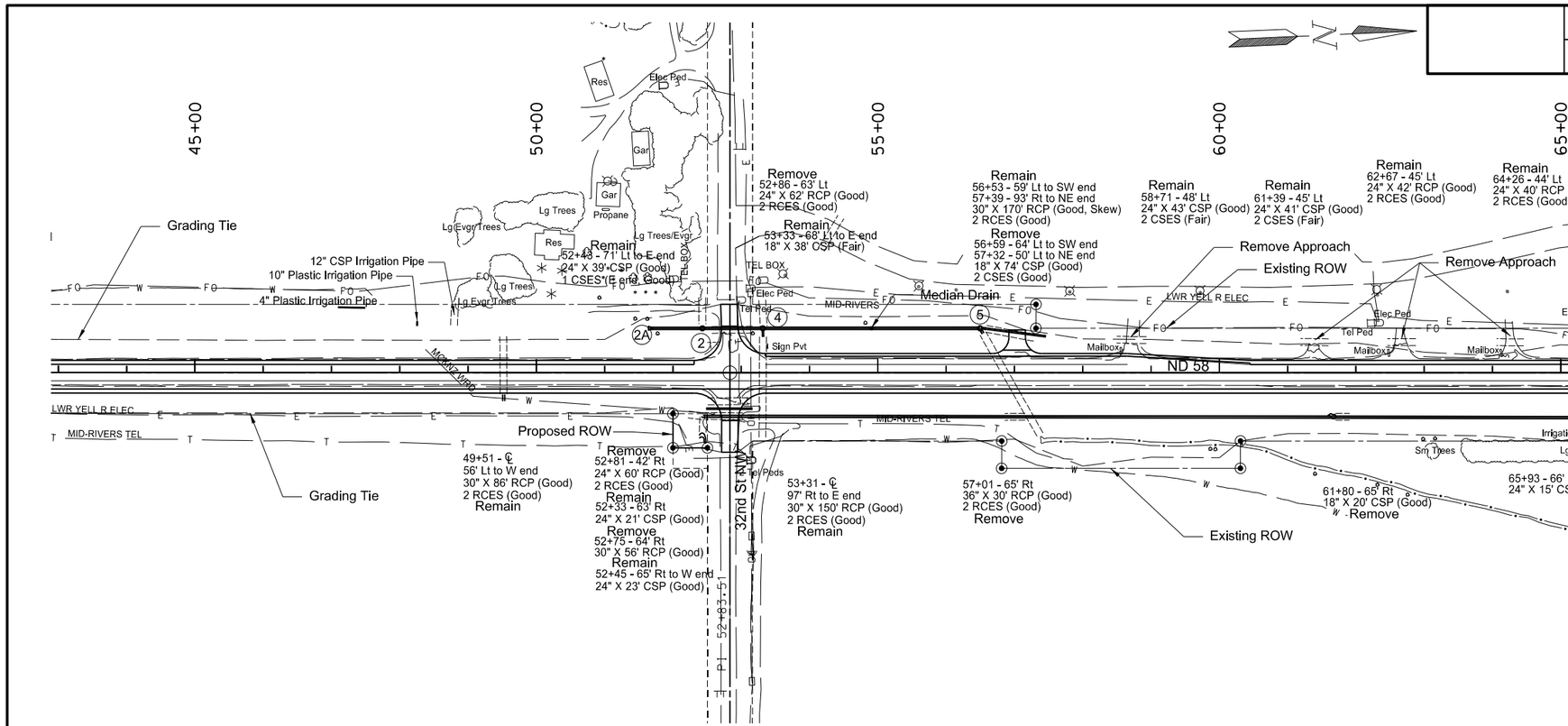

SPEC	CODE	BID ITEM	QUANTITY	UNIT
202	0169	REMOVAL OF END SECTION-ALL TYPES & SIZES		
		49+51 ℄ - Rt	1	EA
		53+31 ℄ - Lt	1	EA
		56+51 ℄ - Lt	1	EA
202	0174	REMOVAL OF PIPE ALL TYPES AND SIZES		
		52+33 Rt	21	LF
		52+81 Rt	60	LF
		52+75 Rt	56	LF
		52+86 Lt	62	LF
		56+59 Lt	74	LF
		58+71 Lt	43	LF
		61+39 Lt	41	LF
		62+67 Lt	42	LF
		64+26 Lt	40	LF
714	0615	PIPE CONC REINF 24IN CL III (Irrigation)		
		54+91 - Lt Riser	4	LF
714	0820	PIPE CONC REINF 30IN CL III (Irrigation)		
		51+70 Lt (2A) to 56+50 Lt (5)	480	LF
		52+44 Rt (3) to 66+03 Rt (6)	1359	LF
		53+31 ℄ Pipe - Lt	6	LF
		56+51 ℄ Pipe - Lt	6	LF
714	0905	PIPE CONC REINF 36IN CL III		
		49+52 ℄ Pipe - Rt	10	LF
714	3036	END SECT - TRAVERSABLE REINF CONC 36IN		
		49+52 ℄ Pipe - Rt	1	EA
714	4106	PIPE CONDUIT 24IN-APPROACH		
		52+82 Rt	68	LF
		56+93 Lt	94	LF
722	0120	MANHOLE 72IN (Irrigation)		
		52+32 Lt (2)	1	EA
		53+31 Lt (4)	1	EA
		56+50 Lt (5)	1	EA
722	1120	MANHOLE RISER 72IN (Irrigation)		
		52+32 Lt (2)	9.15	LF
		53+31 Lt (4)	7.52	LF
		56+50 Lt (5)	5.17	LF
722	4565	MEDIAN DRAIN PRECAST CONCRETE TYPE-A (Irrigation)		
		54+91 Lt	1	EA

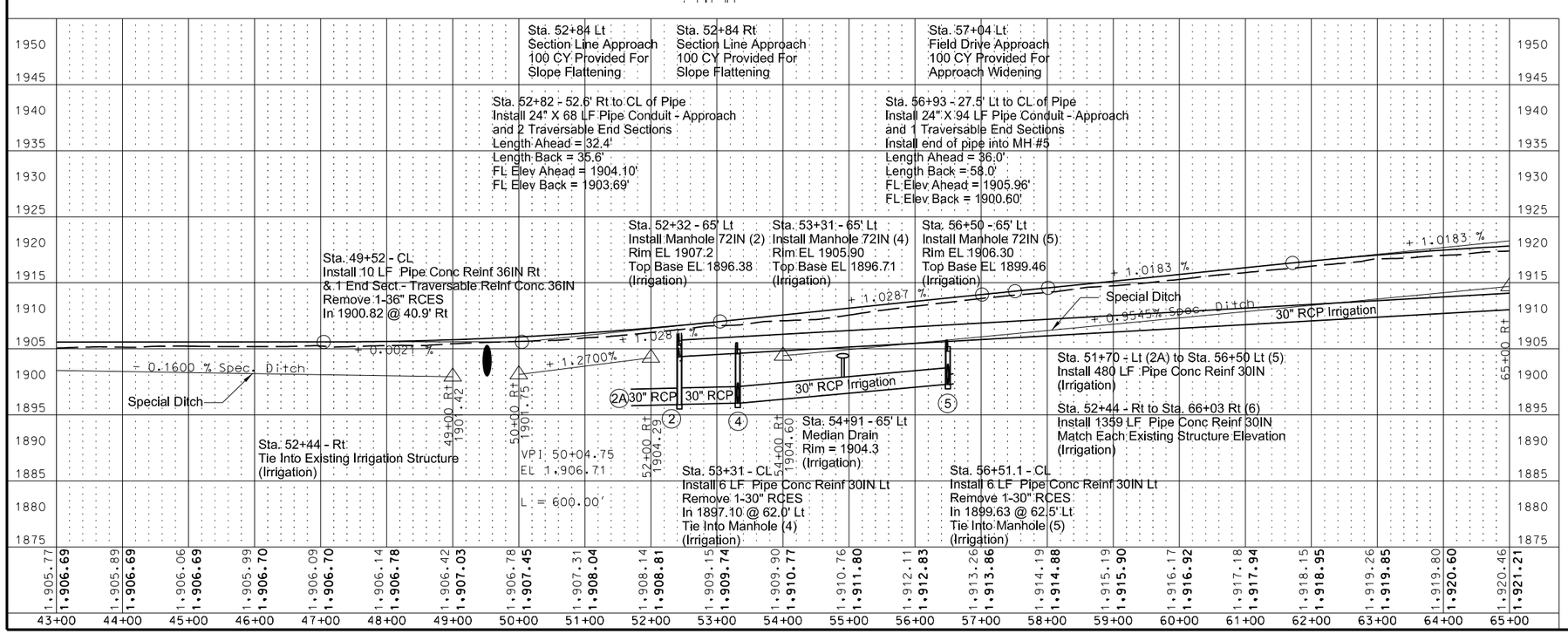

This document was originally issued and sealed by William Doerr, Registration Number PE- 7113, on 12/04/15 and the original document is stored at the North Dakota Department of Transportation

Plan and Profile

ND 58

Jct 200 to Jct 1804

STATE	PROJECT NO.	SECTION NO.	SHEET NO.
ND	SOIB-7-058(013)000	60	4

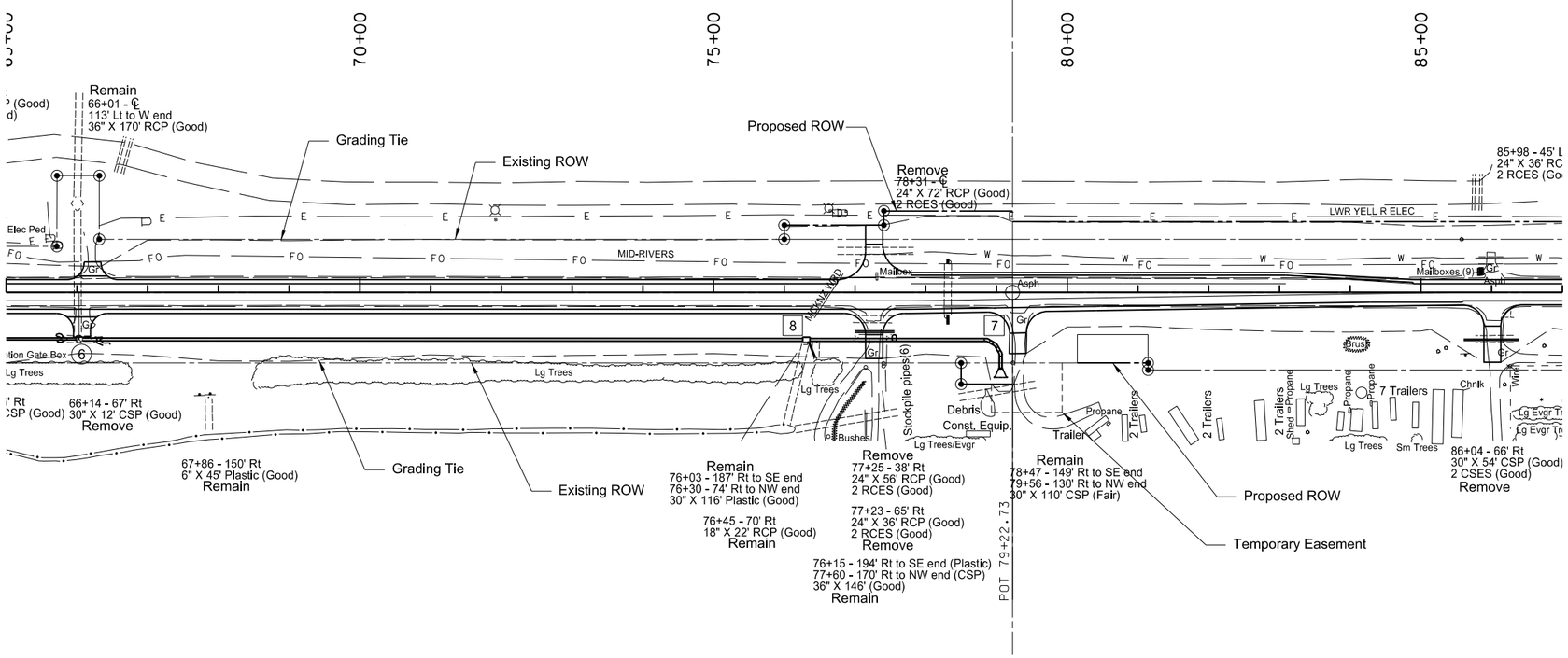

SPEC	CODE	BID ITEM	QUANTITY	UNIT
202	0169	REMOVAL OF END SECTION-ALL TYPES & SIZES		
		78+31 ℄	2	EA
202	0174	REMOVAL OF PIPE ALL TYPES AND SIZES		
		77+23 Rt	36	LF
		77+25 Rt	56	LF
		86+04 Rt	54	LF
714	0615	PIPE CONC REINF 24IN CL III		
		78+31 ℄ Pipe - Lt	6	LF
		78+31 ℄ Pipe - Rt	14	LF
714	1005	PIPE CONC REINF 42IN CL III (Irrigation)		
		66+03 Rt (6) to 76+29 Rt (8)	1026	LF
		76+29 Rt (8) to 78+83 Rt	248	LF
		78+83 Rt to 79+06 Rt	36	LF
		(Includes 3-30° Bends)		
		79+06 Rt to 79+06 Rt	18	LF
714	3023	END SECT - TRAVERSABLE REINF CONC 24IN		
		78+31 ℄ Pipe - Lt	1	EA
		78+31 ℄ Pipe - Rt	1	EA
714	4100	PIPE CONDUIT 18IN (Irrigation)		
		76+25.6 - 70' Rt to 76+43.6 - 92.5' Rt	24	LF
714	4106	PIPE CONDUIT 24IN-APPROACH		
		77+28 Rt	56	LF
714	4116	PIPE CONDUIT 36IN - APPROACH		
		86+00 Rt	68	LF
910	0696	SLUICE GATE 18IN		
		76+29 Rt	1	EA
910	0702	SLUICE GATE 42IN		
		76+29 Rt	1	EA
SEE DETAILS SEC 50 DISTRIBUTION BOX (Irrigation)				
		76+29 Rt (8)	1	EA

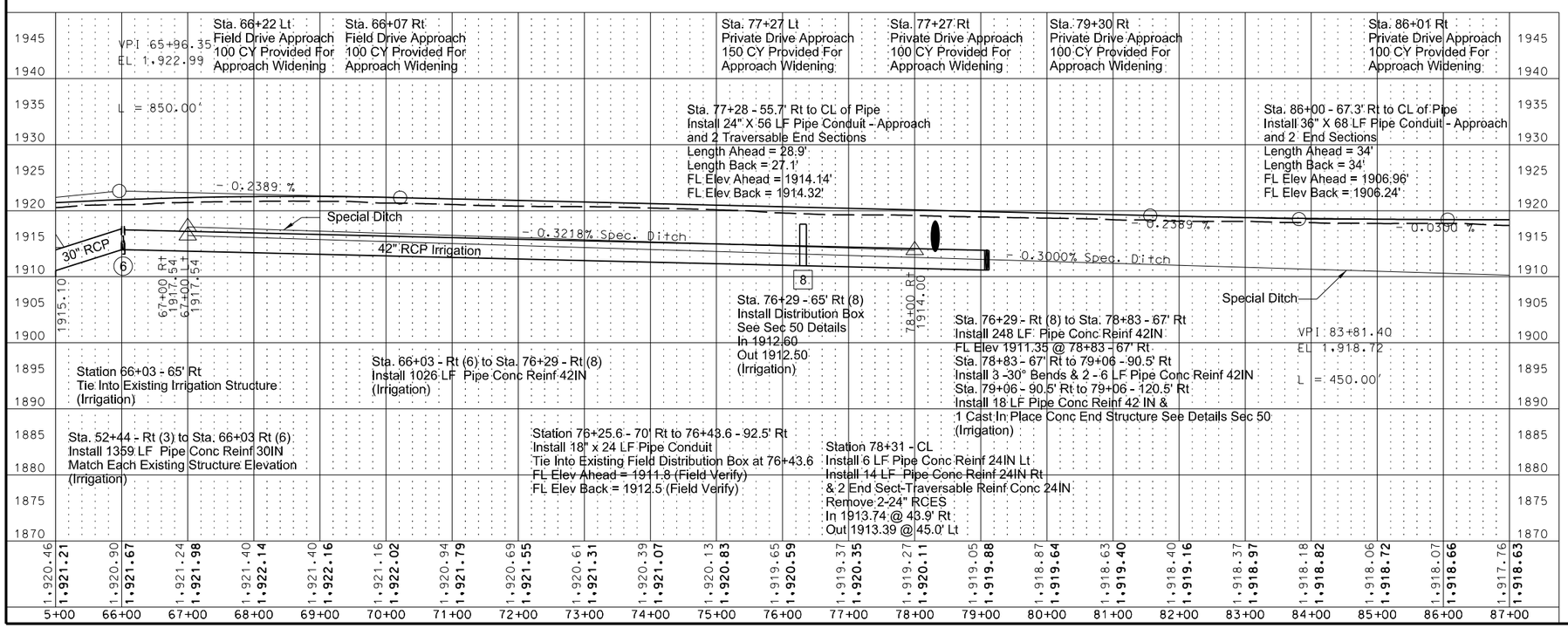

This document was originally issued and sealed by William Doerr, Registration Number PE- 7113, on 12/04/15 and the original document is stored at the North Dakota Department of Transportation

Plan and Profile

ND 58

Jct 200 to Jct 1804

STATE	PROJECT NO.	SECTION NO.	SHEET NO.
ND	SOIB-7-058(013)000	60	5

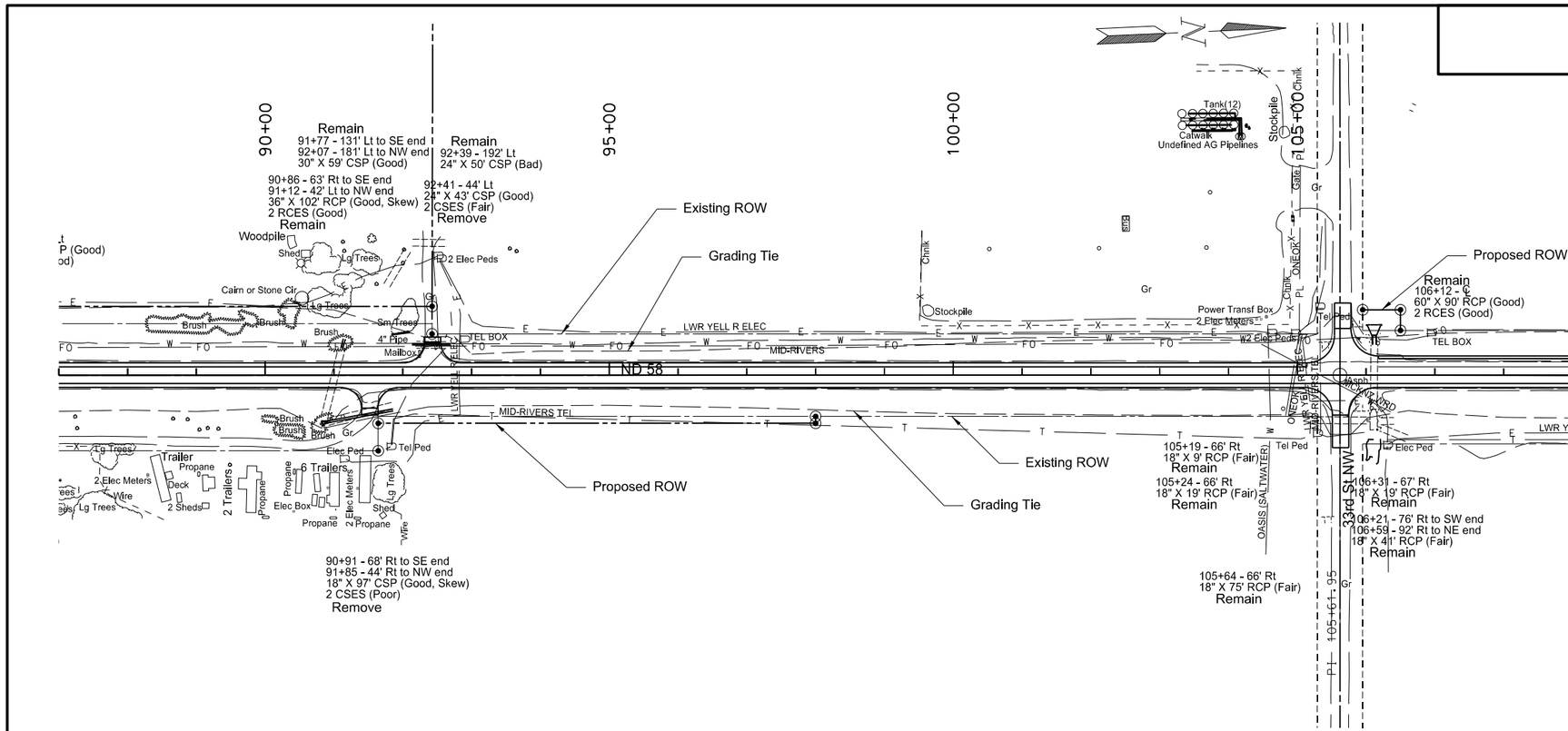

SPEC	CODE	BID ITEM	QUANTITY	UNIT
202	0112	REMOVAL OF CONCRETE		
		106+12 Lt (Irrigation End Structure)	24	SY
202	0174	REMOVAL OF PIPE ALL TYPES AND SIZES		
		90+91 Rt	97	LF
		92+41 Lt	43	LF
714	0905	PIPE CONC REINF 36IN CL III		
		91+15 ℄ Pipe - Lt	14	LF
714	1310	PIPE CONC REINF 60IN CL III		
		106+12 ℄ Pipe - Lt	14	LF
714	4106	PIPE CONDUIT 24IN-APPROACH		
		91+52 Rt	50	LF
		92+42 Lt	56	LF
714	9660	REMOVE AND RELAY END SECTION - ALL TYPES & SIZES		
		91+15 ℄ Pipe - Lt	1	EA

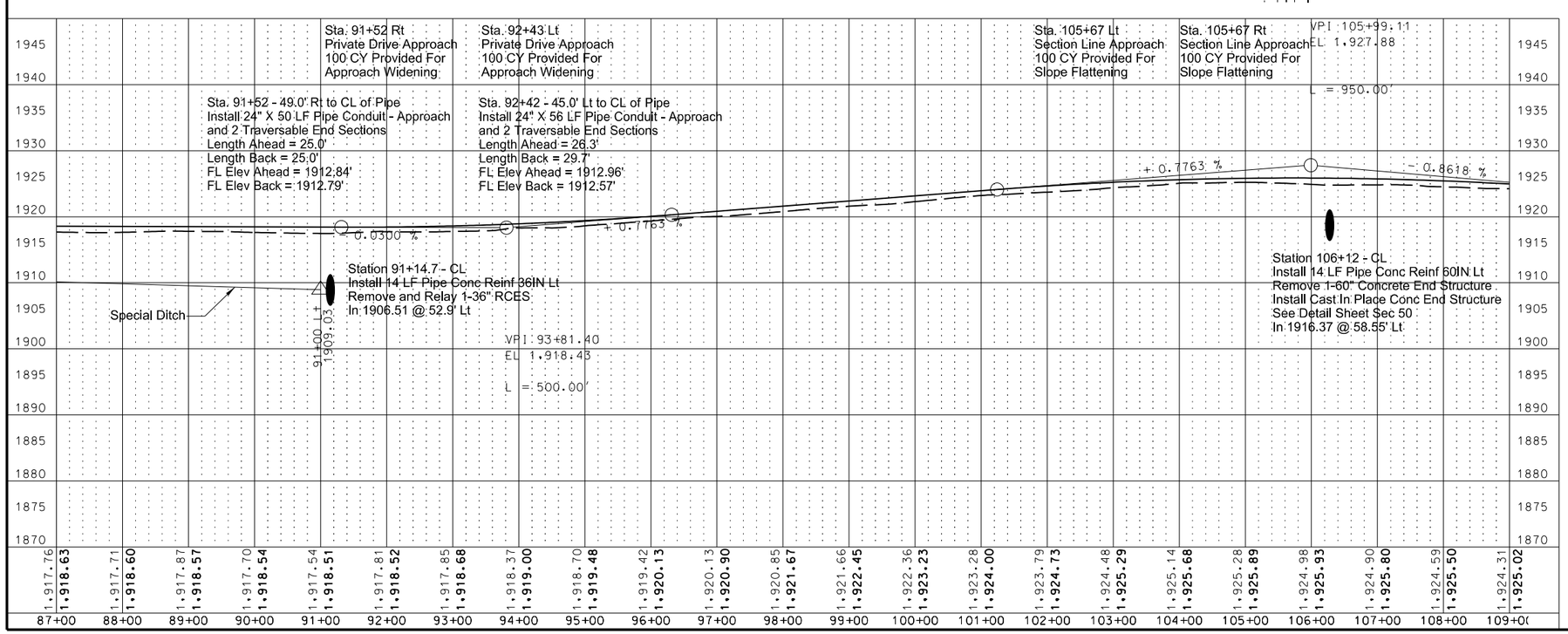

This document was originally issued and sealed by William Doerr, Registration Number PE- 7113, on 12/04/15 and the original document is stored at the North Dakota Department of Transportation

Plan and Profile

ND 58

Jct 200 to Jct 1804

STATE	PROJECT NO.	SECTION NO.	SHEET NO.
ND	SOIB-7-058(013)000	60	6

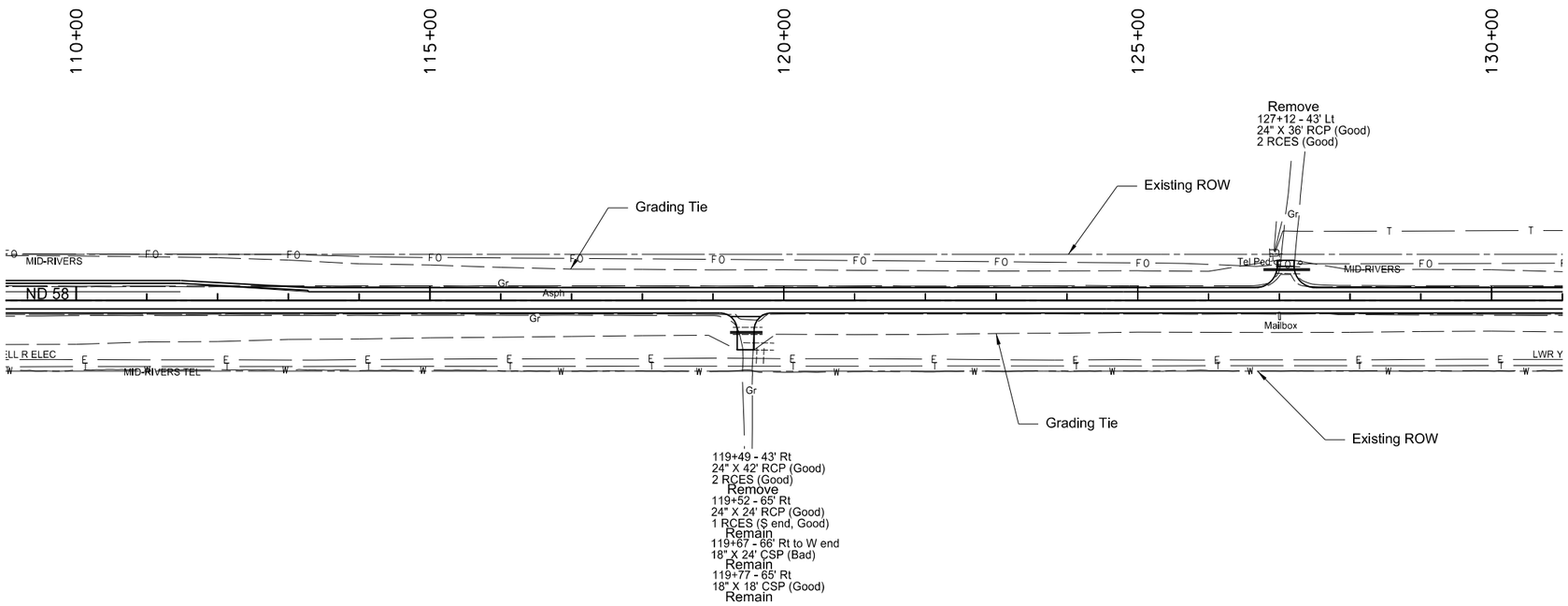

SPEC	CODE	BID ITEM	QUANTITY	UNIT
202	0174	REMOVAL OF PIPE ALL TYPES AND SIZES		
		119+49 Rt	42	LF
		127+12 Lt	36	LF
714	4106	PIPE CONDUIT 24IN-APPROACH		
		119+47 Rt	46	LF
714	4113	PIPE CONDUIT 30IN-APPROACH		
		127+11 Lt	58	LF

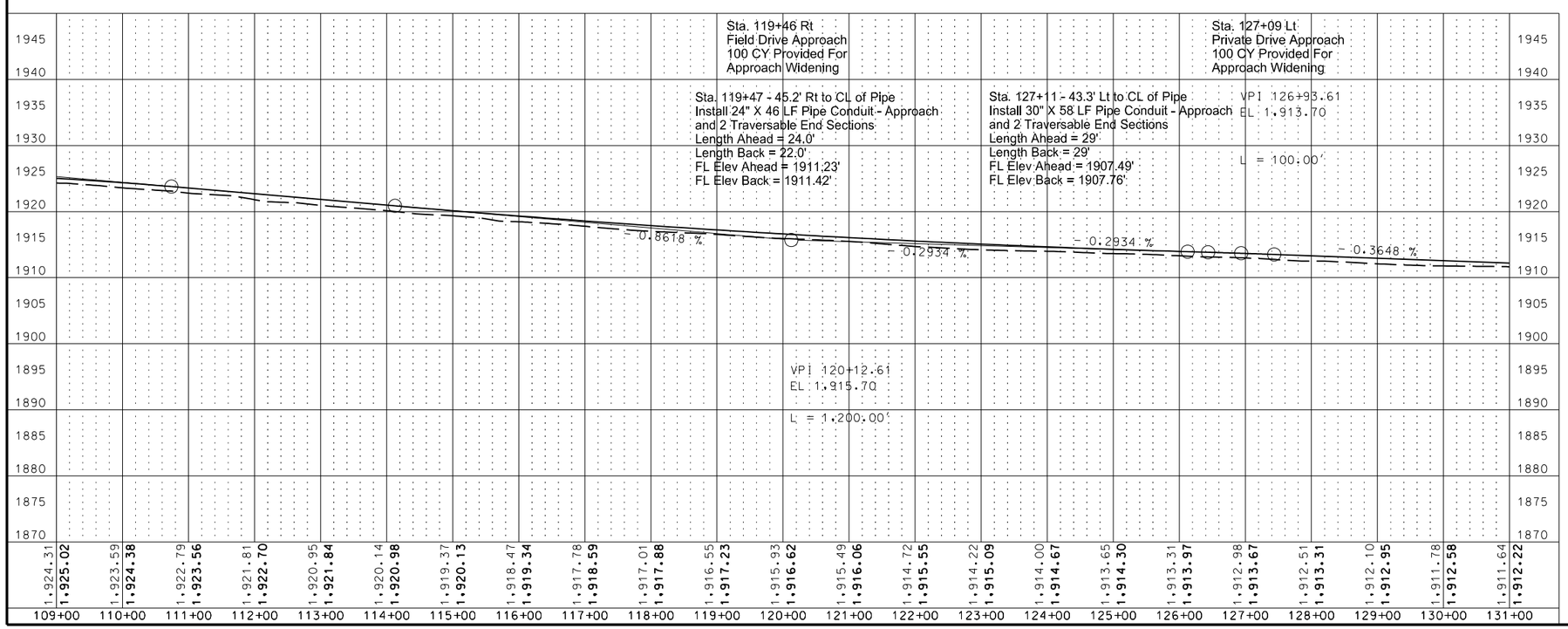

This document was originally issued and sealed by William Doerr, Registration Number PE- 7113, on 12/04/15 and the original document is stored at the North Dakota Department of Transportation

Plan and Profile

ND 58

Jct 200 to Jct 1804

STATE	PROJECT NO.	SECTION NO.	SHEET NO.
ND	SOIB-7-058(013)000	60	7

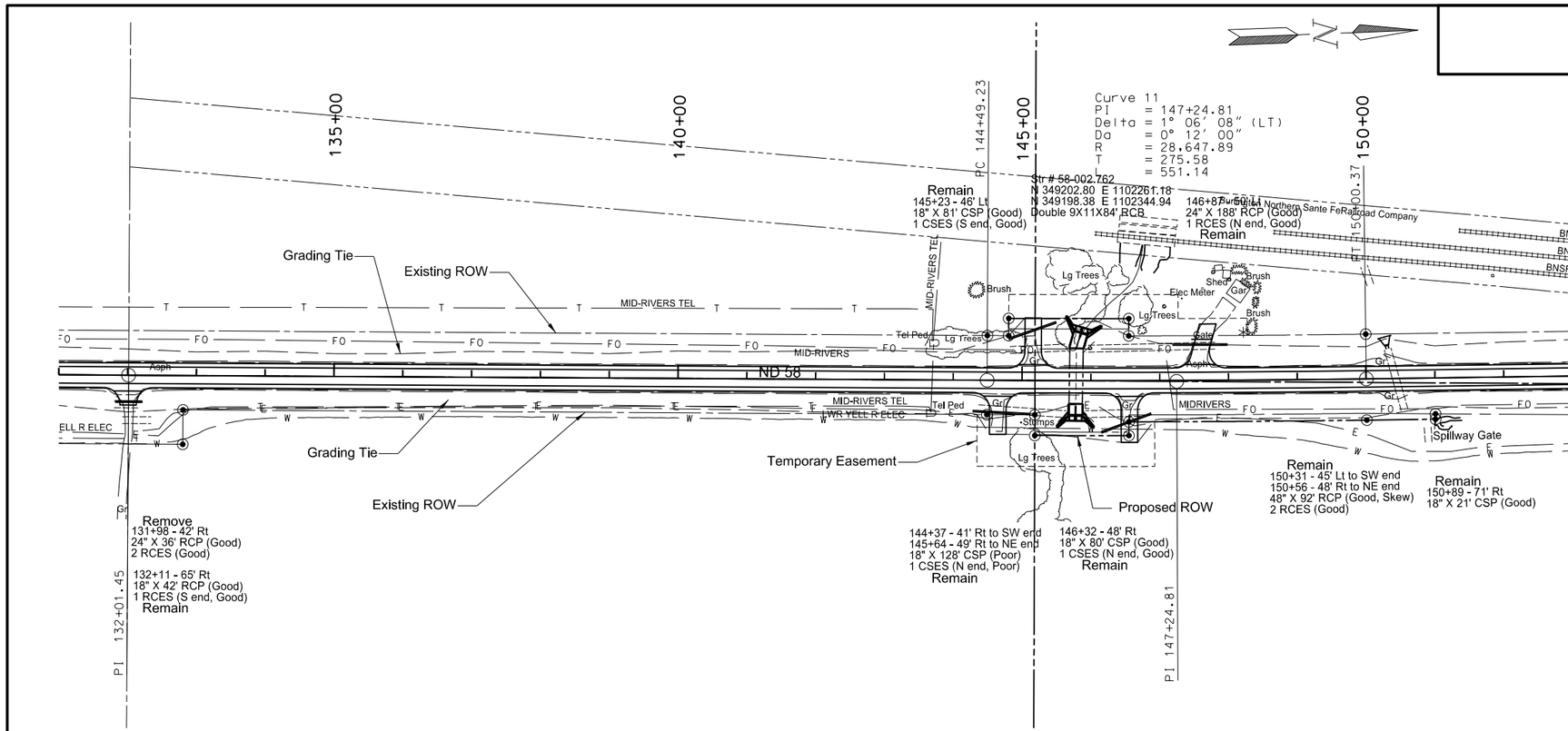

SPEC	CODE	BID ITEM	QUANTITY	UNIT
202	0112	REMOVAL OF CONCRETE		
		150+44 Lt (Irrigation End Structure)	16	SY
202	0174	REMOVAL OF PIPE ALL TYPES AND SIZES		
		131+98 Rt	36	LF
		144+82 Lt	68	LF
		147+54 Lt	52	LF
714	1105	PIPE CONC REINF 48IN CL III		
		150+44 ℄ Pipe - Lt	6	LF
714	4106	PIPE CONDUIT 24IN-APPROACH		
		132+02 Rt	40	LF
		144+65 Lt	84	LF
		145+17 Lt	74	LF
		146+54 Rt	78	LF
		147+52 Lt	80	LF

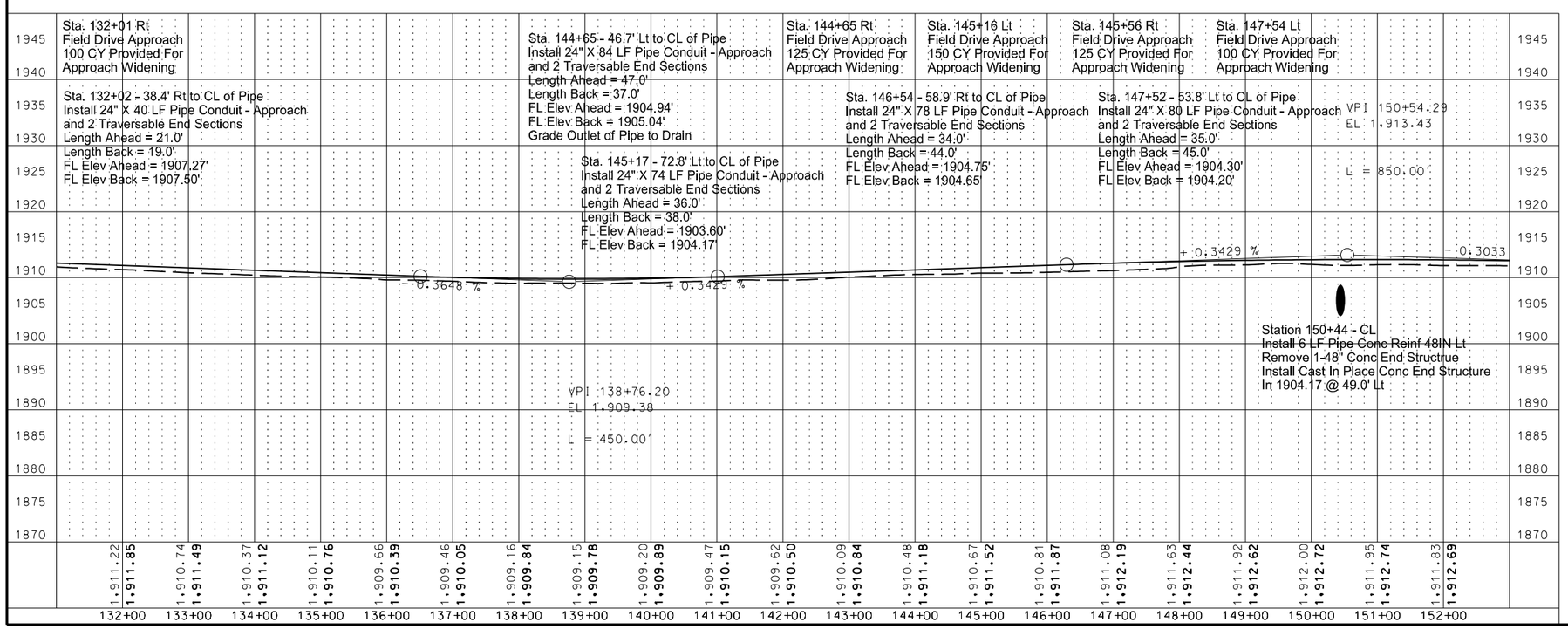

This document was originally issued and sealed by William Doerr, Registration Number PE- 7113, on 12/04/15 and the original document is stored at the North Dakota Department of Transportation

Plan and Profile

ND 58

Jct 200 to Jct 1804

STATE	PROJECT NO.	SECTION NO.	SHEET NO.
ND	SOIB-7-058(013)000	60	8

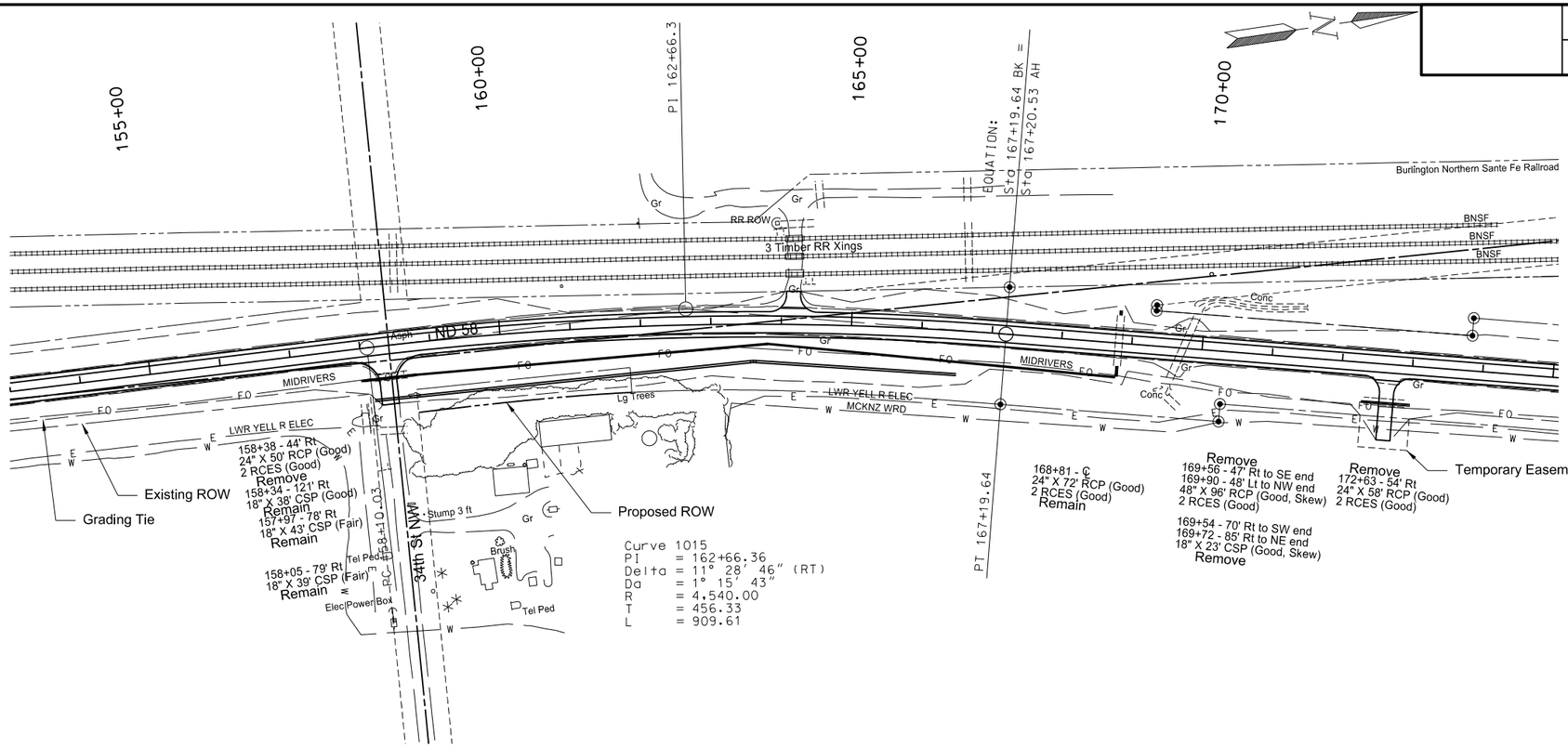

SPEC	CODE	BID ITEM	QUANTITY	UNIT
202	0169	REMOVAL OF END SECTION-ALL TYPES & SIZES		
		168+81 ℄ Pipe - Rt	1	EA
		168+81 ℄ Pipe - Lt	1	EA
202	0174	REMOVAL OF PIPE ALL TYPES AND SIZES		
		158+38 Rt	50	LF
		172+63 Rt	58	LF
714	0615	PIPE CONC REINF 24IN CL III		
		168+81 ℄ Pipe - Rt	8	LF
714	2165	PIPE CONC REINF ARCH 65IN X 40IN CL III (Irrigation)		
		158+11 - 76' Rt to 166+53 - 66' Rt	827	LF
		(Includes (1) 5 degree bend)		
714	3023	END SECT - TRAVERSABLE REINF CONC 24IN		
		168+81 ℄ Pipe - Rt	1	EA
		168+81 ℄ Pipe - Lt	1	EA
714	4100	PIPE CONDUIT 18IN (Temporary Pipe for Grading)		
		157+96 45' Rt to 168+82 49' Rt	1076	LF
		(Includes (1) 9 degree bend)		
714	4106	PIPE CONDUIT 24IN-APPROACH		
		158+39 Rt	76	LF
		172+66 Rt	70	LF

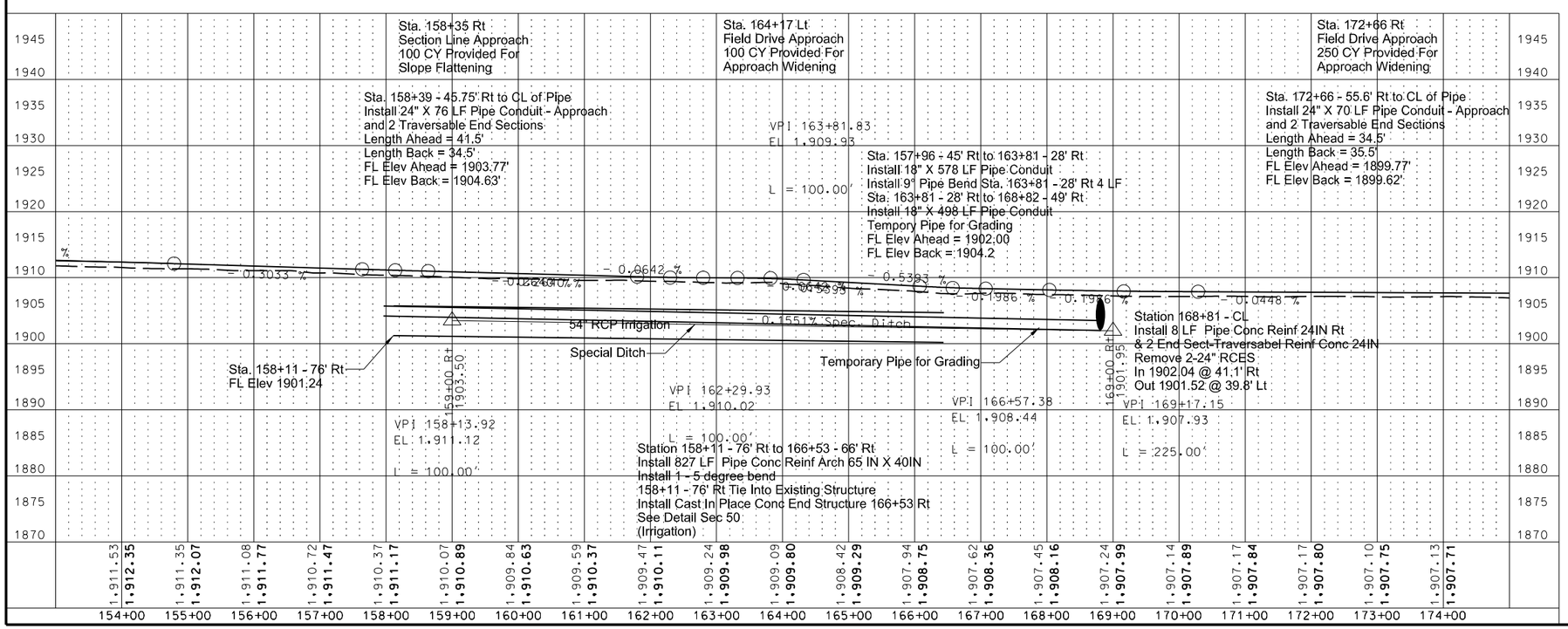

This document was originally issued and sealed by William Doerr, Registration Number PE- 7113, on 12/04/15 and the original document is stored at the North Dakota Department of Transportation

Plan and Profile

ND 58

Jct 200 to Jct 1804

STATE	PROJECT NO.	SECTION NO.	SHEET NO.
ND	SOIB-7-058(013)000	60	9

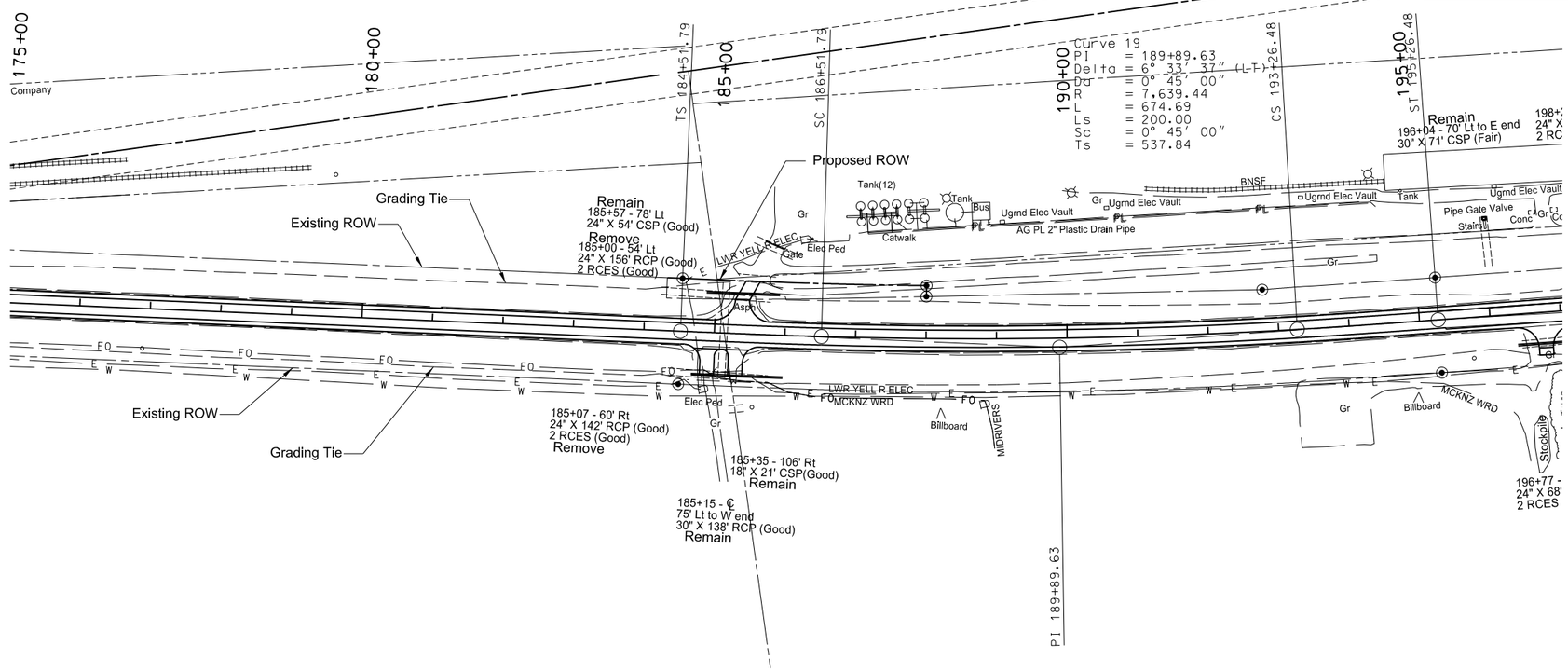

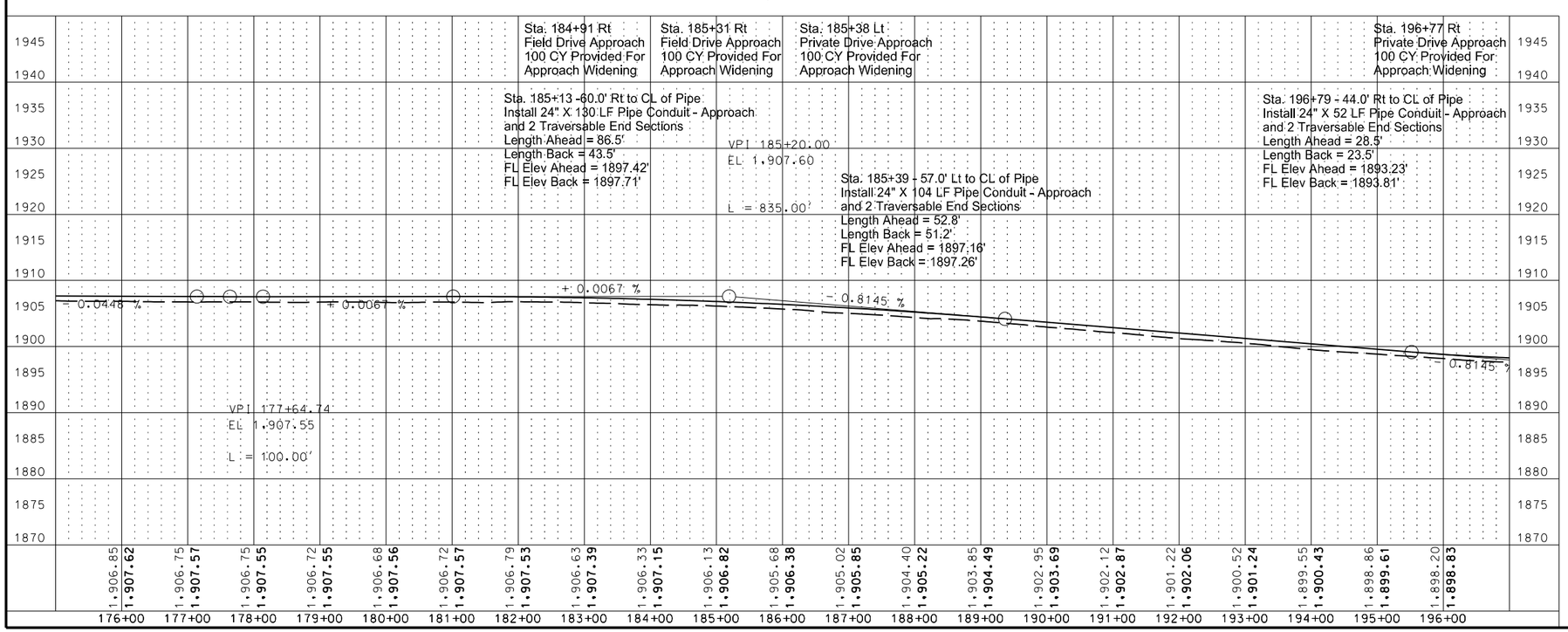

SPEC	CODE	BID ITEM	QUANTITY	UNIT
202	0174	REMOVAL OF PIPE ALL TYPES AND SIZES		
		185+00 Lt	156	LF
		185+07 Rt	142	LF
		196+77 Rt	68	LF
714	4106	PIPE CONDUIT 24IN-APPROACH		
		185+13 Rt	130	LF
		185+39 Lt	104	LF
		196+79 Rt	52	LF

This document was originally issued and sealed by William Doerr, Registration Number PE- 7113, on 12/04/15 and the original document is stored at the North Dakota Department of Transportation

Plan and Profile

ND 58

Jct 200 to Jct 1804

STATE	PROJECT NO.	SECTION NO.	SHEET NO.
ND	SOIB-7-058(013)000	60	10

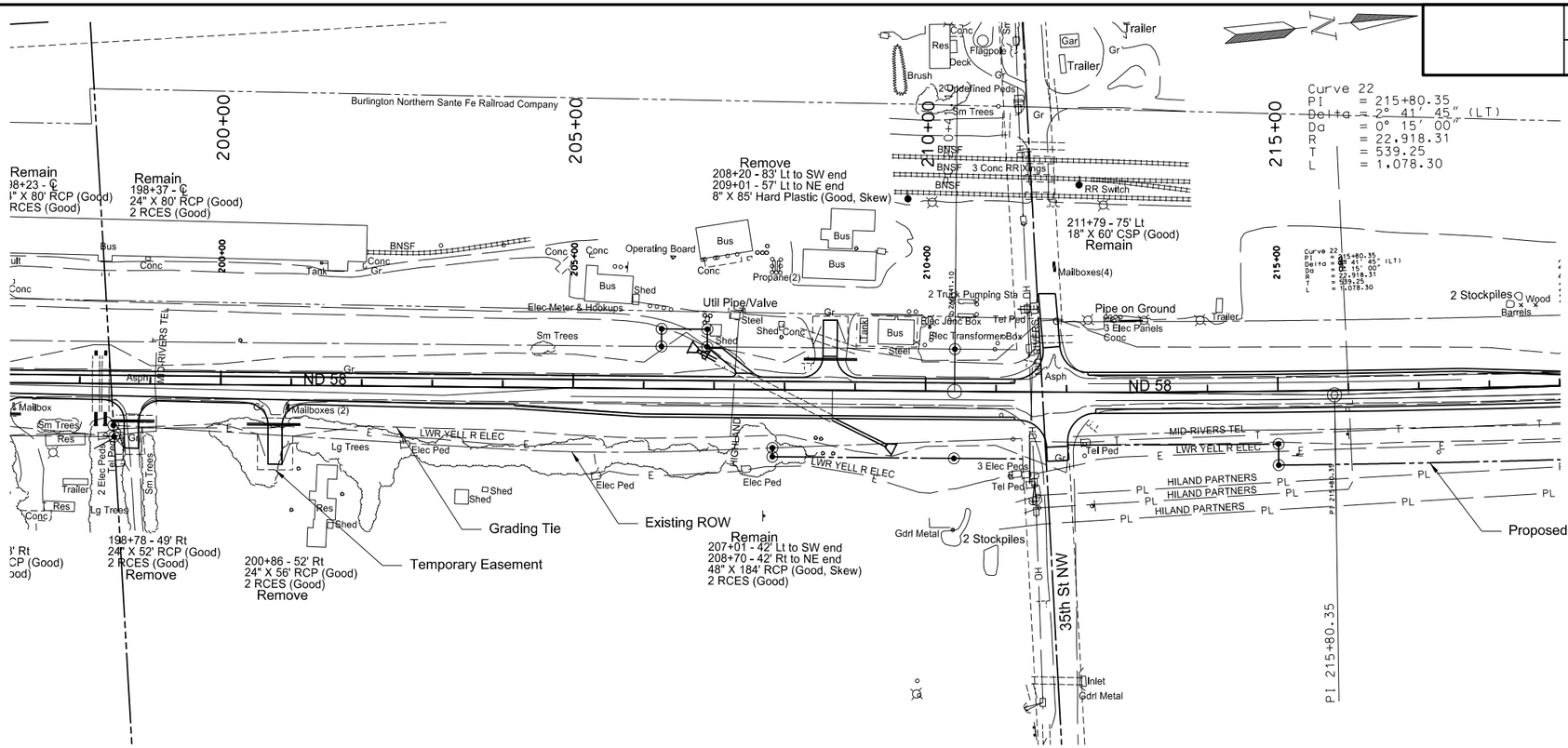

SPEC	CODE	BID ITEM	QUANTITY	UNIT
202	0112	REMOVAL OF CONCRETE		
		207+00 Lt (Irrigation End Structure)	16	SY
		208+68 Rt (Irrigation End Structure)	16	SY
202	0169	REMOVAL OF END SECTION-ALL TYPES & SIZES		
		198+23 ℄ Pipe - Lt	1	EA
		198+23 ℄ Pipe - Rt	1	EA
		198+37 ℄ Pipe - Rt	1	EA
		198+37 ℄ Pipe - Lt	1	EA
202	0174	REMOVAL OF PIPE ALL TYPES AND SIZES		
		198+78 Rt	52	LF
		200+86 Rt	56	LF
		208+20 Lt	85	LF
714	0615	PIPE CONC REINF 24IN CL III		
		198+23 ℄ Pipe - Rt	6	LF
		198+37 ℄ Pipe - Rt	6	LF
714	1105	PIPE CONC REINF 48IN CL III		
		207+85 ℄ Pipe - Rt	86	LF
		207+85 ℄ Pipe - Lt	30	LF
714	3023	END SECT - TRAVERSABLE REINF CONC 24IN		
		198+23 ℄ Pipe - Lt	1	EA
		198+23 ℄ Pipe - Rt	1	EA
		198+37 ℄ Pipe - Rt	1	EA
		198+37 ℄ Pipe - Lt	1	EA
714	4106	PIPE CONDUIT 24IN-APPROACH		
		198+76 Rt	62	LF
		200+76 Rt	76	LF
		208+65 Lt	76	LF

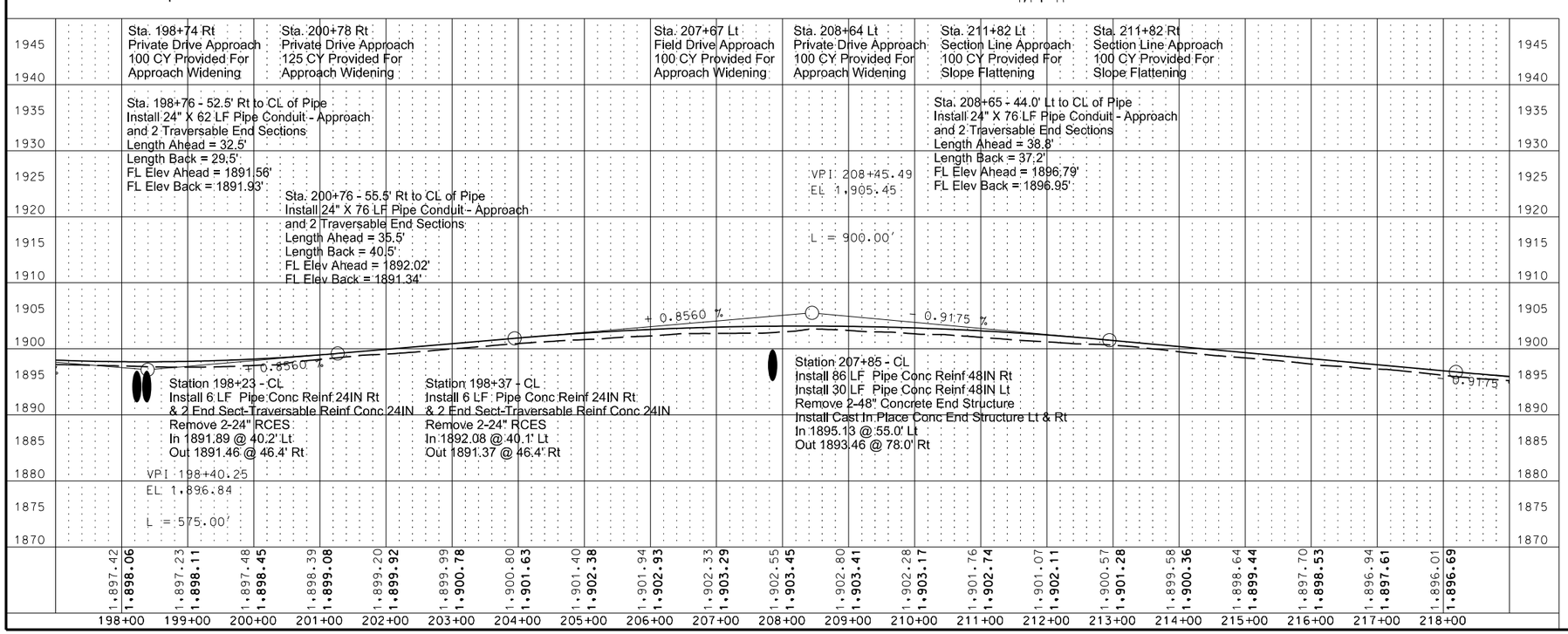

This document was originally issued and sealed by William Doerr, Registration Number PE- 7113, on 12/04/15 and the original document is stored at the North Dakota Department of Transportation

Plan and Profile

ND 58

Jct 200 to Jct 1804

STATE	PROJECT NO.	SECTION NO.	SHEET NO.
ND	SOIB-7-058(013)000	60	11

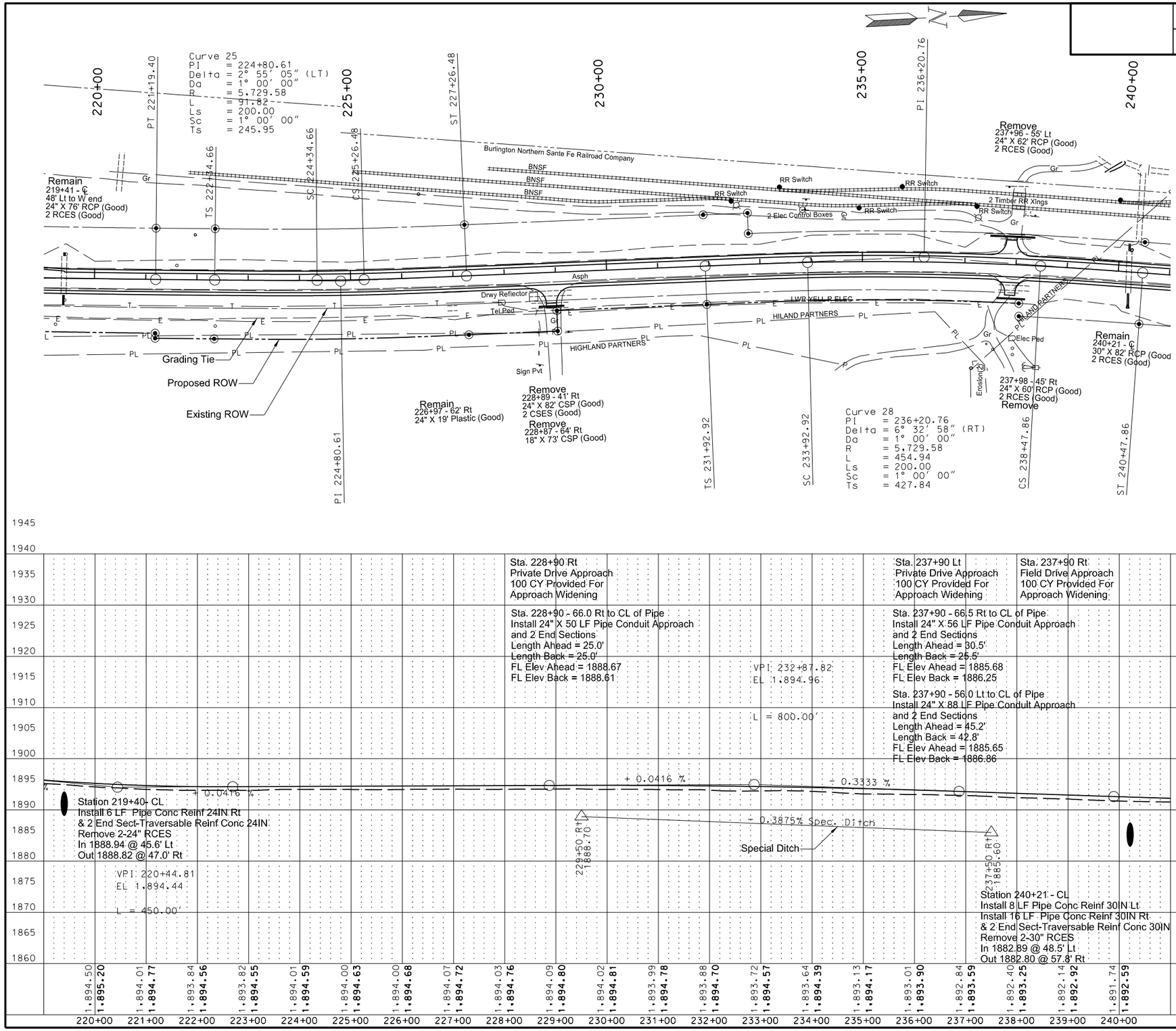

SPEC	CODE	BID ITEM	QUANTITY	UNIT
202	0169	REMOVAL OF END SECTION-ALL TYPES & SIZES		
		219+40 ℄	2	EA
		240+21 ℄	2	EA
202	0174	REMOVAL OF PIPE ALL TYPES AND SIZES		
		228+89 Rt	82	LF
		228+87 Rt	73	LF
		237+96 Lt	62	LF
		237+98 Rt	60	LF
714	0615	PIPE CONC REINF 24IN CL III		
		219+40 ℄ Pipe - Rt	6	LF
714	0820	PIPE CONC REINF 30IN CL III		
		240+21 ℄ Pipe - Lt	8	LF
		240+21 ℄ Pipe - Rt	16	LF
714	3023	END SECT - TRAVERSABLE REINF CONC 24IN CL III		
		219+40 ℄ Pipe - Rt	1	EA
		219+40 ℄ Pipe - Lt	1	EA
714	3033	END SECT - TRAVERSABLE REINF CONC 30IN CL III		
		240+21 ℄ Pipe - Lt	1	EA
		240+21 ℄ Pipe - Rt	1	EA
714	4106	PIPE CONDUIT 24IN-APPROACH		
		228+90 Rt	50	LF
		237+90 Rt	56	LF
		237+90 Lt	88	LF

This document was originally issued and sealed by William Doerr, Registration Number PE- 7113, on 12/04/15 and the original document is stored at the North Dakota Department of Transportation

Plan and Profile

ND 58

Jct 200 to Jct 1804

STATE	PROJECT NO.	SECTION NO.	SHEET NO.
ND	SOIB-7-058(013)000	60	12

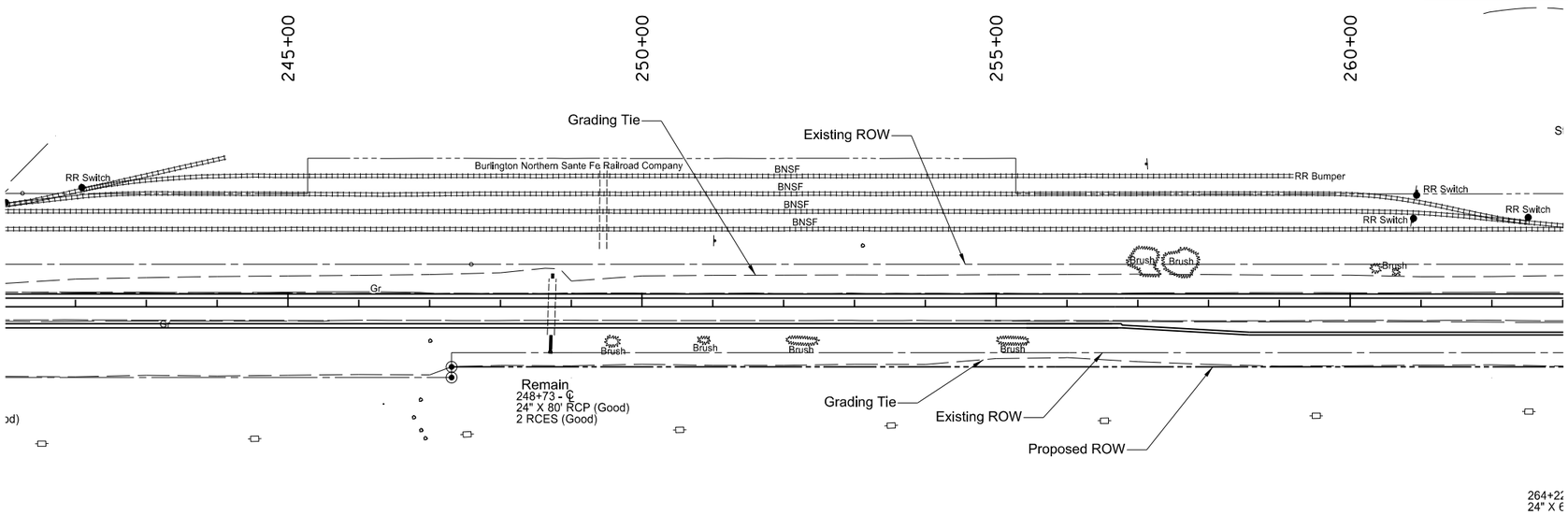

SPEC	CODE	BID ITEM	QUANTITY	UNIT
202	0169	REMOVAL OF END SECTION-ALL TYPES & SIZES		
		248+73 ℄	2	EA
714	0615	PIPE CONC REINF 24IN CL III		
		248+73 ℄ - Rt	12	LF
714	3023	END SECT - TRAVERSABLE REINF CONC 24IN CL III		
		248+73 ℄ - Rt	1	EA
		248+73 ℄ - Lt	1	EA

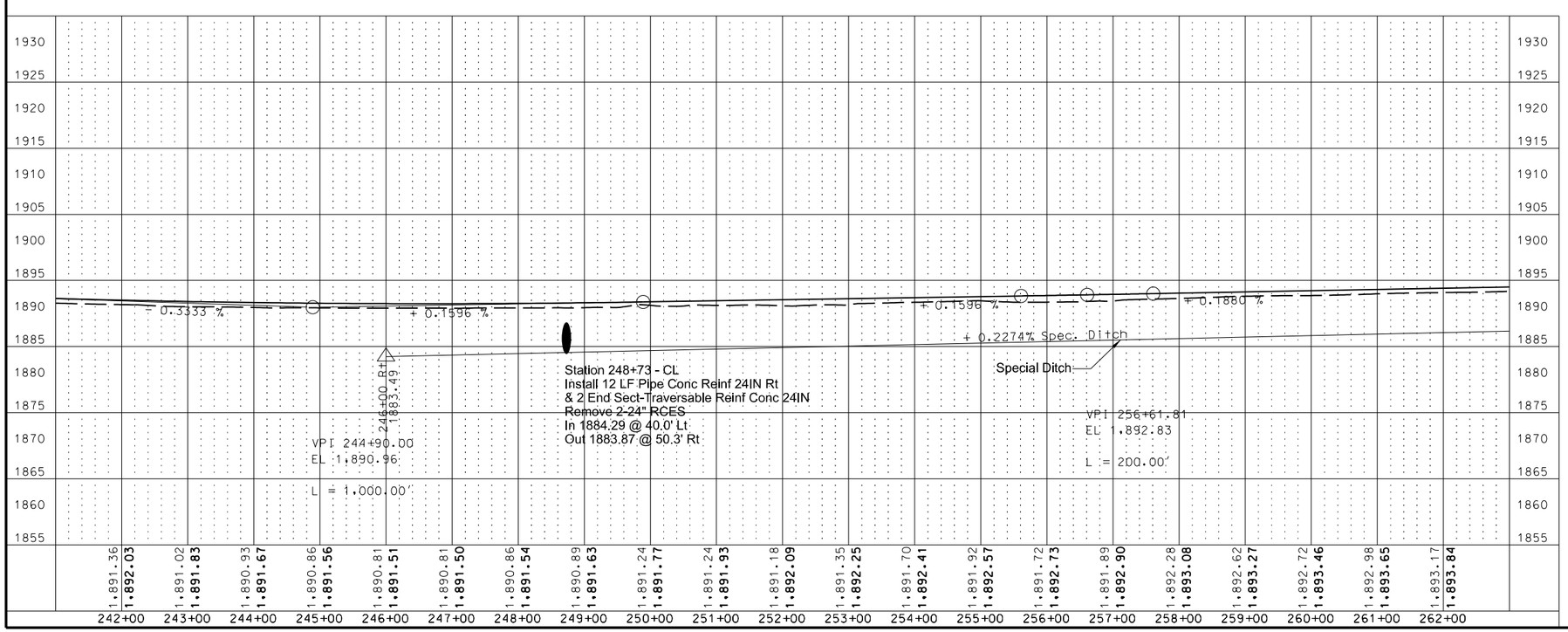

This document was originally issued and sealed by William Doerr, Registration Number PE- 7113, on 12/04/15 and the original document is stored at the North Dakota Department of Transportation

Plan and Profile

ND 58

Jct 200 to Jct 1804

STATE	PROJECT NO.	SECTION NO.	SHEET NO.
ND	SOIB-7-058(013)000	60	13

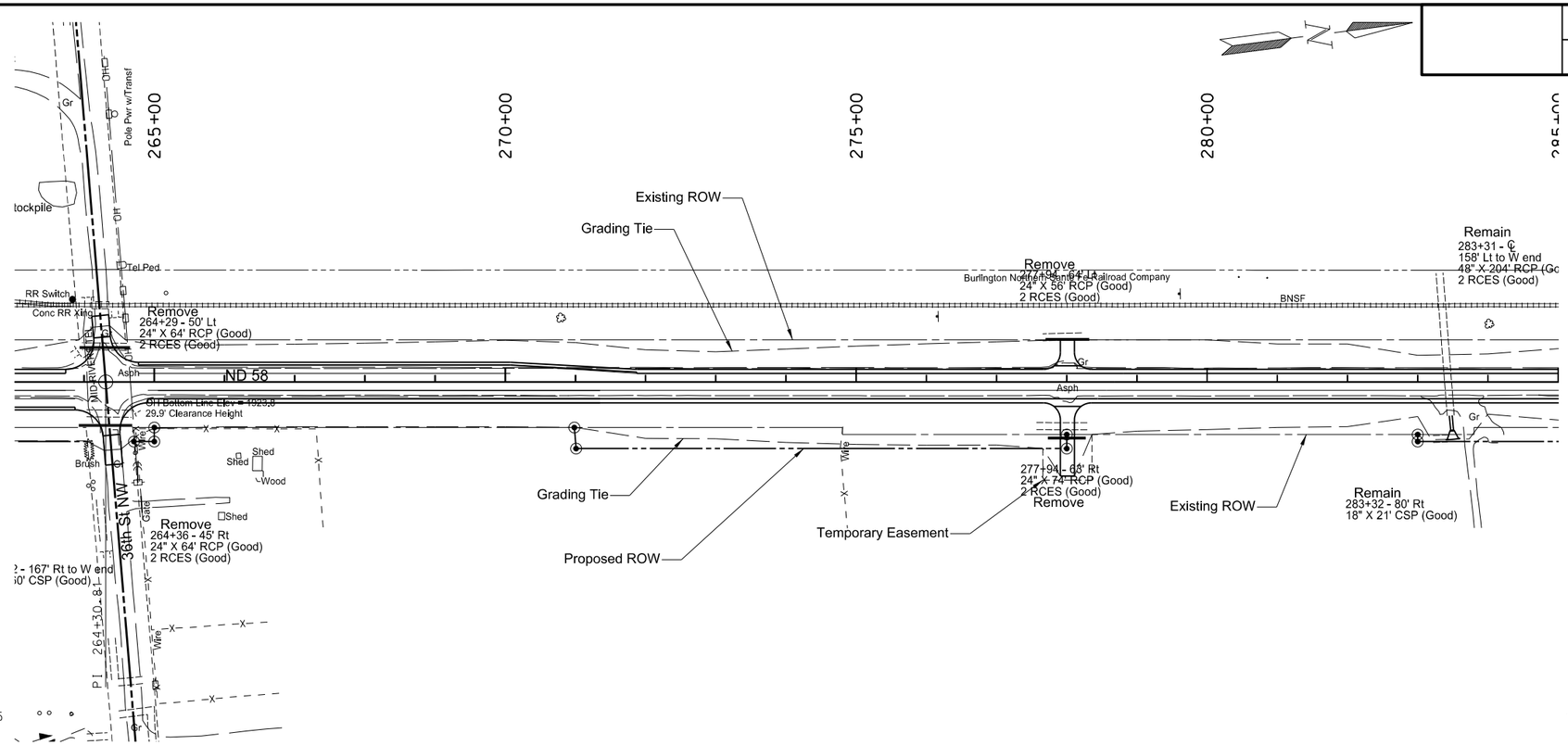

SPEC	CODE	BID ITEM	QUANTITY	UNIT
202	0112	REMOVAL OF CONCRETE		
		283+32 Rt (Irrigation End Structure)	16	SY
202	0174	REMOVAL OF PIPE ALL TYPES AND SIZES		
		264+29 Lt	64	LF
		264+36 Rt	64	LF
		277+94 Lt	56	LF
		277+94 Rt	74	LF
714	1105	PIPE CONC REINF 48IN CL III		
		283+42 ℄ Pipe - Rt	16	LF
714	4106	PIPE CONDUIT 24IN-APPROACH		
		264+31 Lt	72	LF
		264+31 Rt	76	LF
		278+01 Lt	66	LF
		278+01 Rt	54	LF

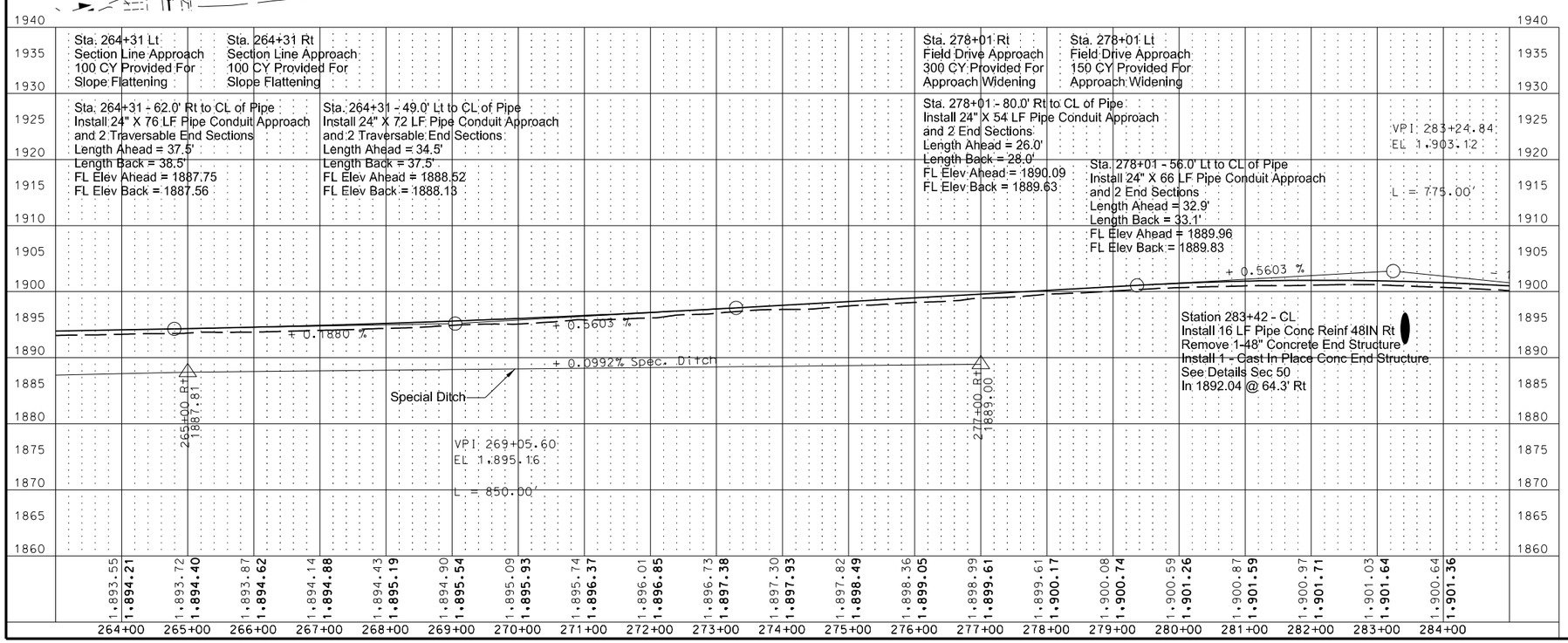

This document was originally issued and sealed by William Doerr, Registration Number PE- 7113, on 12/04/15 and the original document is stored at the North Dakota Department of Transportation

Plan and Profile

ND 58

Jct 200 to Jct 1804

STATE	PROJECT NO.	SECTION NO.	SHEET NO.
ND	SOIB-7-058(013)000	60	14

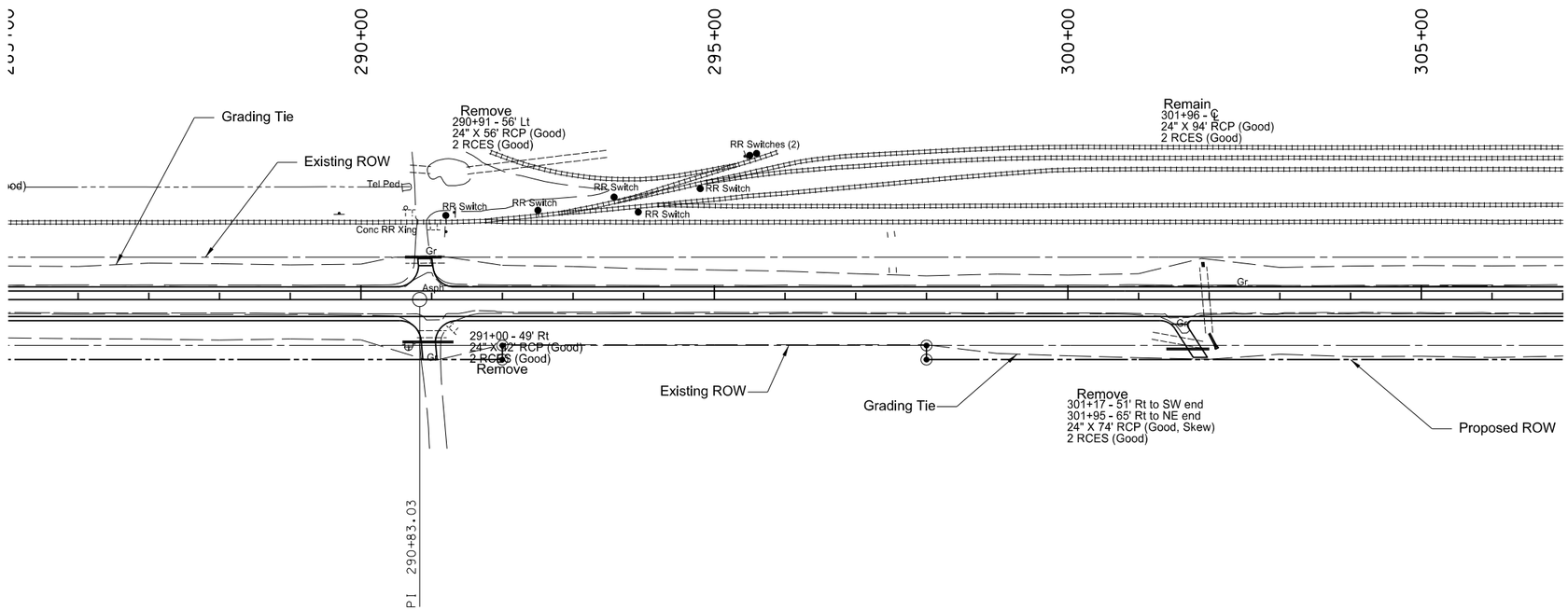

SPEC	CODE	BID ITEM	QUANTITY	UNIT
202	0169	REMOVAL OF END SECTION-ALL TYPES & SIZES		
		301+96 ℄ Pipe - Lt	1	EA
202	0174	REMOVAL OF PIPE ALL TYPES AND SIZES		
		290+91 Lt	56	LF
		291+00 Rt	42	LF
		301+17 Rt	74	LF
714	0615	PIPE CONC REINF 24IN CL III		
		301+96 ℄ Pipe - Rt (includes(1) 22.5deg bend)	18	LF
714	3023	END SECT - TRAVERSABLE REINF CONC 24IN CL III		
		301+96 ℄ - Lt	1	EA
714	4106	PIPE CONDUIT 24IN-APPROACH		
		290+93 Lt	52	LF
		290+93 Rt	72	LF
		301+40 Rt	82	LF
714	9660	REMOVE AND RELAY END SECTION - ALL TYPES & SIZES		
		301+96 ℄ Pipe - Rt	1	EA

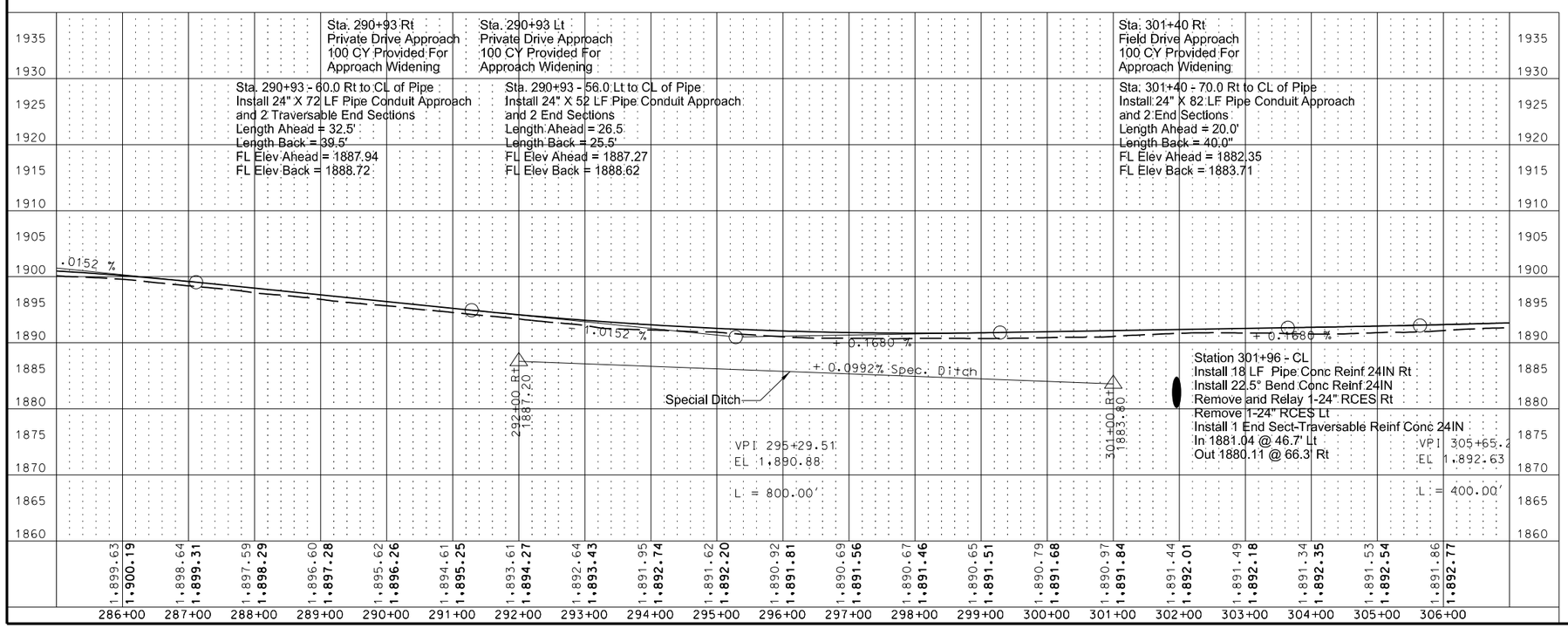

This document was originally issued and sealed by William Doerr, Registration Number PE- 7113, on 12/04/15 and the original document is stored at the North Dakota Department of Transportation

Plan and Profile

ND 58

Jct 200 to Jct 1804

STATE	PROJECT NO.	SECTION NO.	SHEET NO.
ND	SOIB-7-058(013)000	60	15

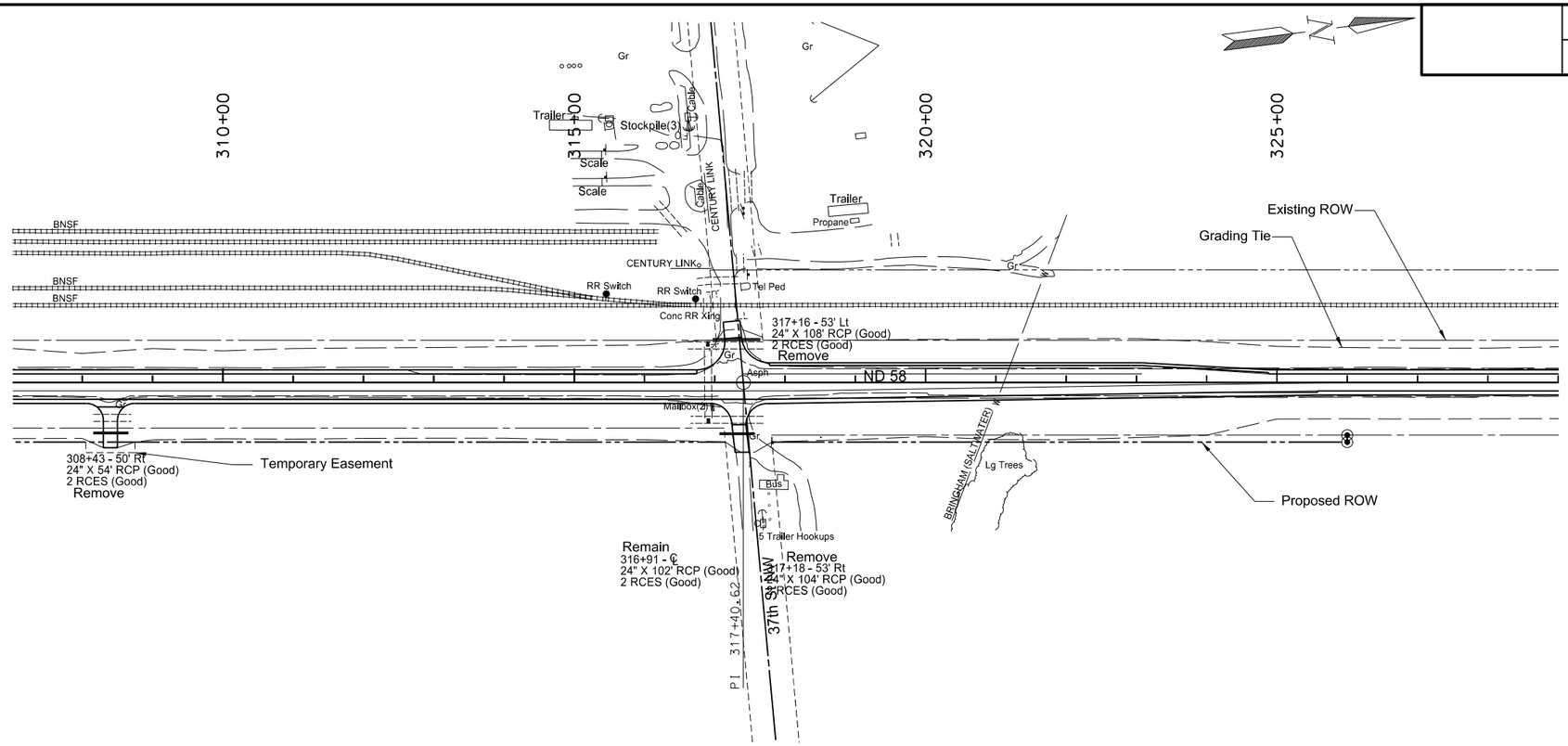

SPEC	CODE	BID ITEM	QUANTITY	UNIT
202	0169	REMOVAL OF END SECTION-ALL TYPES & SIZES		
		316+91 ℄	2	EA
202	0174	REMOVAL OF PIPE ALL TYPES AND SIZES		
		308+43 Rt	54	LF
		317+16 Lt	108	LF
		317+18 Rt	104	LF
714	3023	END SECT - TRAVERSABLE REINF CONC 24IN CL III		
		316+91 ℄ - Rt	1	EA
		316+91 ℄ - Lt	1	EA
714	4106	PIPE CONDUIT 24IN-APPROACH		
		308+40 Rt	50	LF
		317+32 Lt	68	LF
		317+32 Rt	50	LF

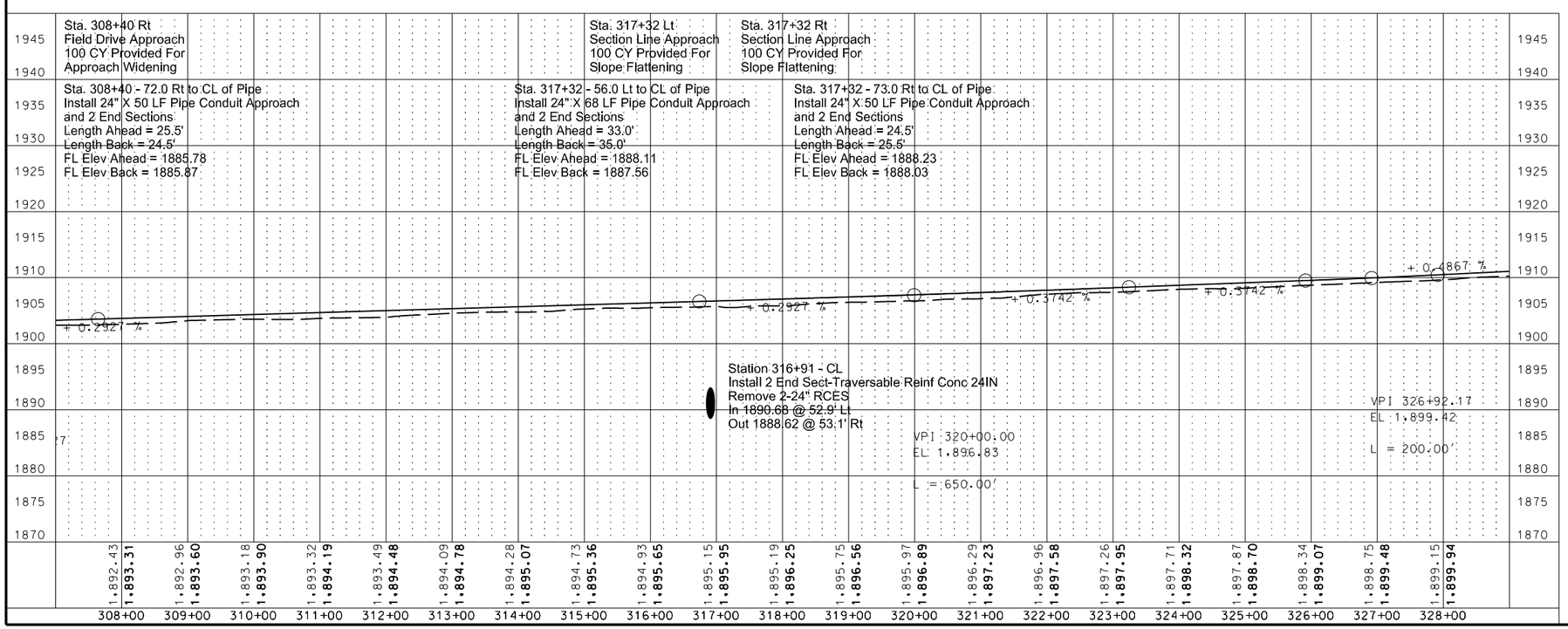

This document was originally issued and sealed by William Doerr, Registration Number PE- 7113, on 12/04/15 and the original document is stored at the North Dakota Department of Transportation

Plan and Profile

ND 58

Jct 200 to Jct 1804

STATE	PROJECT NO.	SECTION NO.	SHEET NO.
ND	SOIB-7-058(013)000	60	16

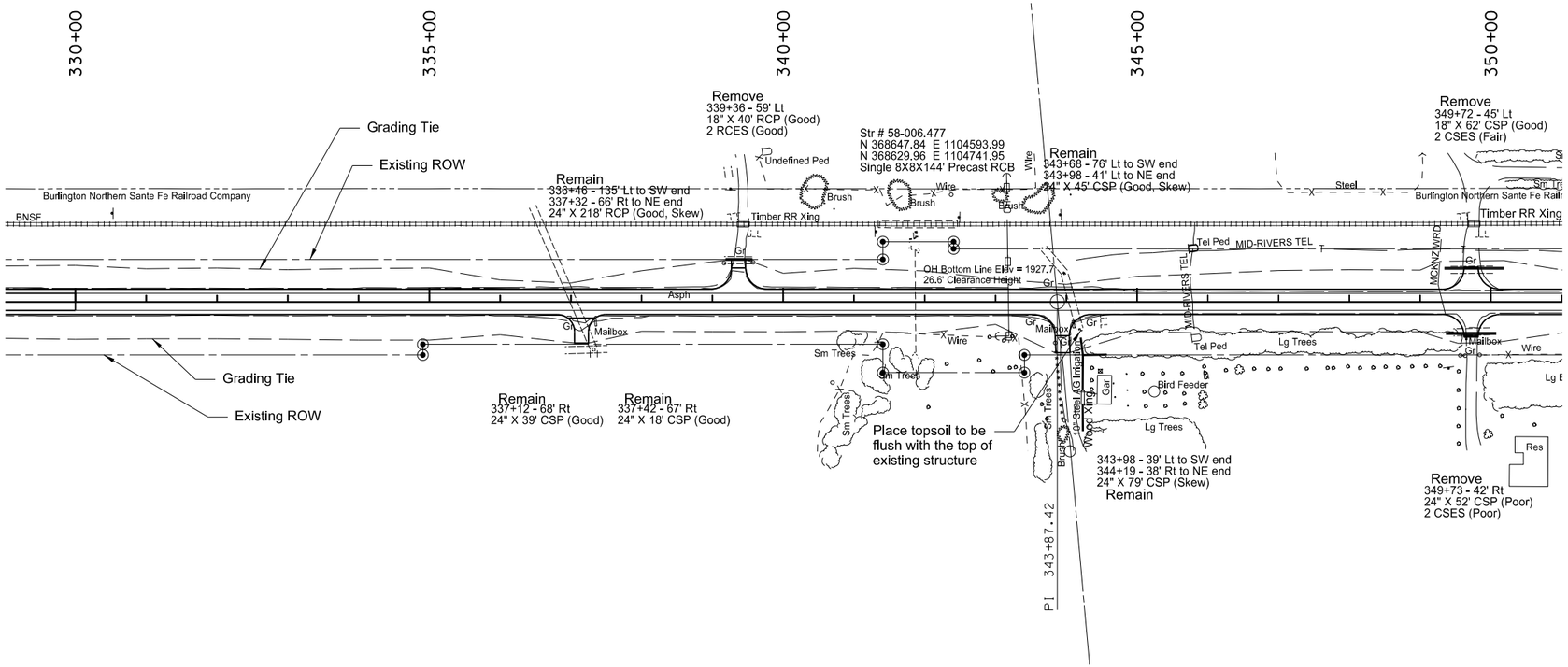

SPEC	CODE	BID ITEM	QUANTITY	UNIT
202	0174	REMOVAL OF PIPE ALL TYPES AND SIZES		
		339+36 Lt	40	LF
		349+72 Lt	62	LF
		349+73 Rt	52	LF
714	4106	PIPE CONDUIT 24IN-APPROACH		
		339+37 Lt	38	LF
		349+76 Lt	84	LF
		349+76 Rt	64	LF

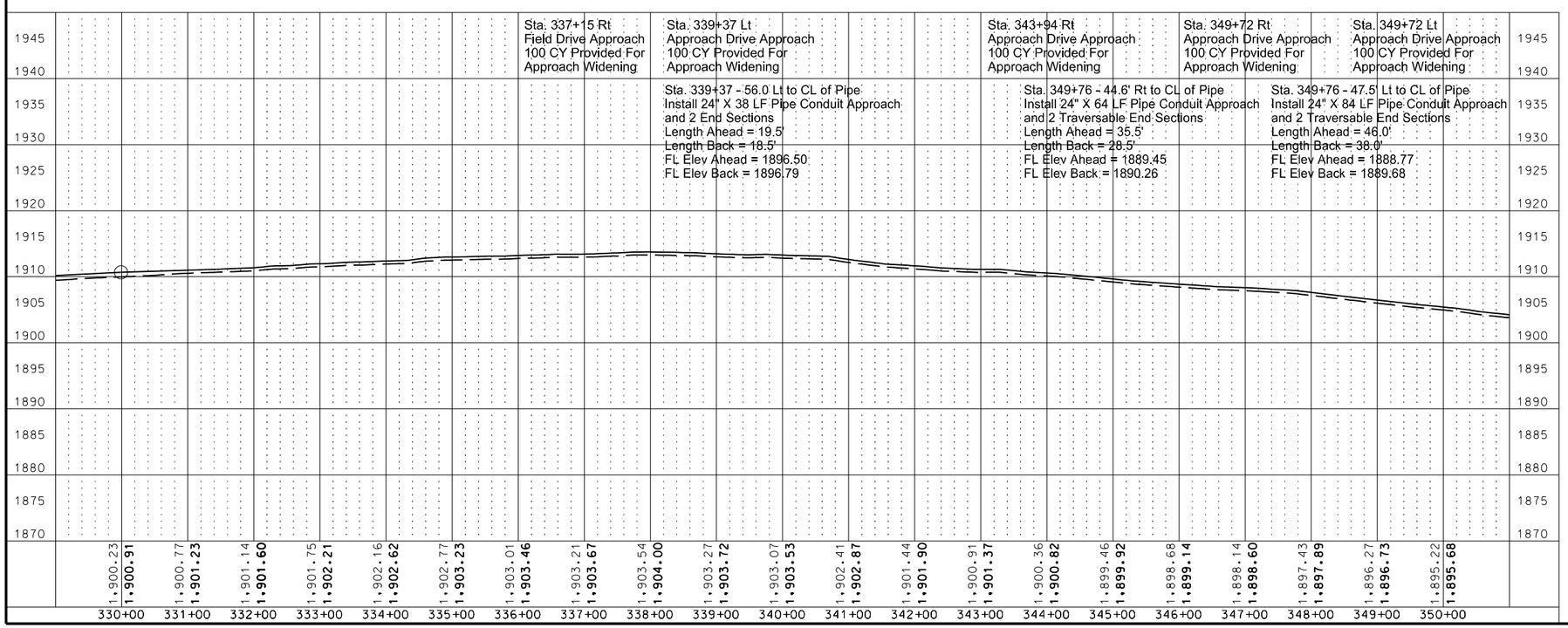

This document was originally issued and sealed by William Doerr, Registration Number PE- 7113, on 12/04/15 and the original document is stored at the North Dakota Department of Transportation

Plan and Profile

ND 58

Jct 200 to Jct 1804

STATE	PROJECT NO.	SECTION NO.	SHEET NO.
ND	SOIB-7-058(013)000	60	17

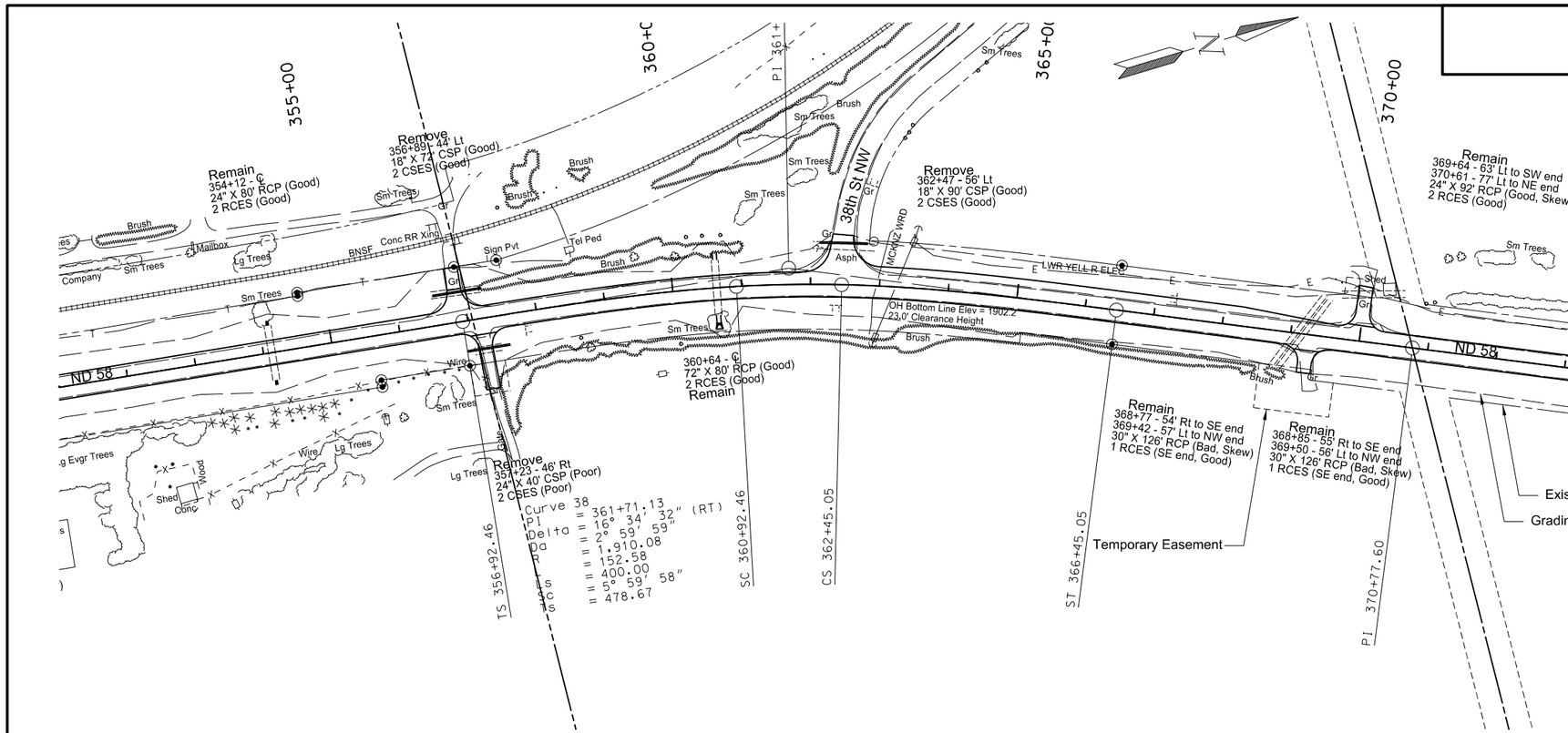

SPEC	CODE	BID ITEM	QUANTITY	UNIT
202	0169	REMOVAL OF END SECTION-ALL TYPES & SIZES		
		354+12 ℄ - Lt	1	EA
		354+12 ℄ - Rt	1	EA
202	0174	REMOVAL OF PIPE ALL TYPES AND SIZES		
		356+89 Lt	72	LF
		357+23 Rt	40	LF
		362+47 Lt	90	LF
714	0615	PIPE CONC REINF 24IN CL III		
		360+64 ℄ Pipe - Lt	12	LF
		360+64 ℄ Pipe - Rt	12	LF
714	3023	END SECT - TRAVERSABLE REINF CONC 24IN CL III		
		354+12 ℄ - Rt	1	EA
		354+12 ℄ - Lt	1	EA
714	4106	PIPE CONDUIT 24IN-APPROACH		
		356+87 Lt	72	LF
		357+19 Rt	62	LF
		362+46 Lt	70	LF
714	9660	REMOVE AND RELAY END SECTION - ALL TYPES & SIZES		
		360+64 ℄ - Rt	1	EA
		360+64 ℄ - Lt	1	EA

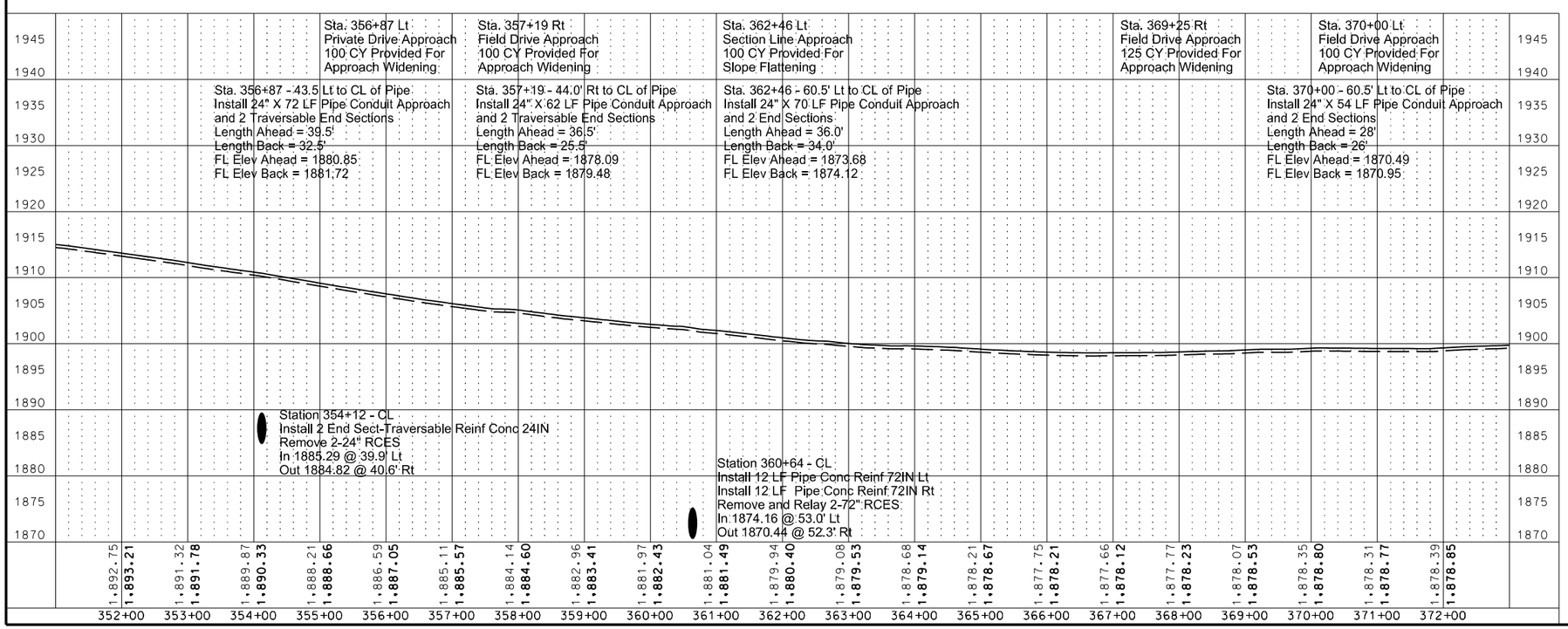

This document was originally issued and sealed by William Doerr, Registration Number PE- 7113, on 12/04/15 and the original document is stored at the North Dakota Department of Transportation

Plan and Profile

ND 58

Jct 200 to Jct 1804

STATE	PROJECT NO.	SECTION NO.	SHEET NO.
ND	SOIB-7-058(013)000	60	18

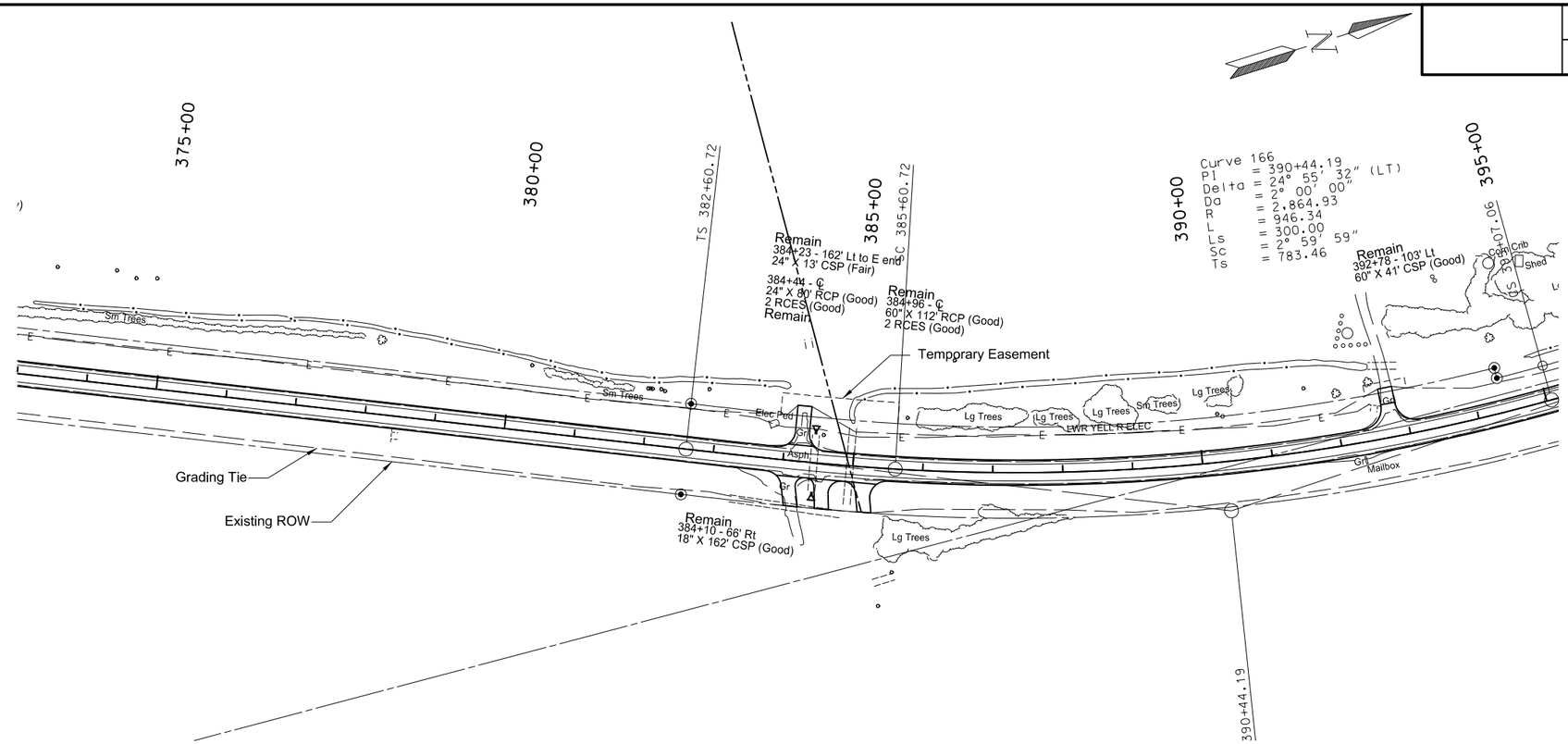

SPEC	CODE	BID ITEM	QUANTITY	UNIT
202	0112	REMOVAL OF CONCRETE		
		384+44 Lt (Irrigation End Structure)	5	SY
		384+44 Rt (Irrigation End Structure)	5	SY
714	0615	PIPE CONC REINF 24IN CL III		
		384+44 ℄ Pipe - Rt	6	LF
		384+44 ℄ Pipe - Lt	6	LF
714	1310	PIPE CONC REINF 60IN CL III		
		384+96 ℄ Pipe - Rt	8	LF
714	9660	REMOVE AND RELAY END SECTION - ALL TYPES & SIZES		
		384+96 ℄ - Rt	1	EA

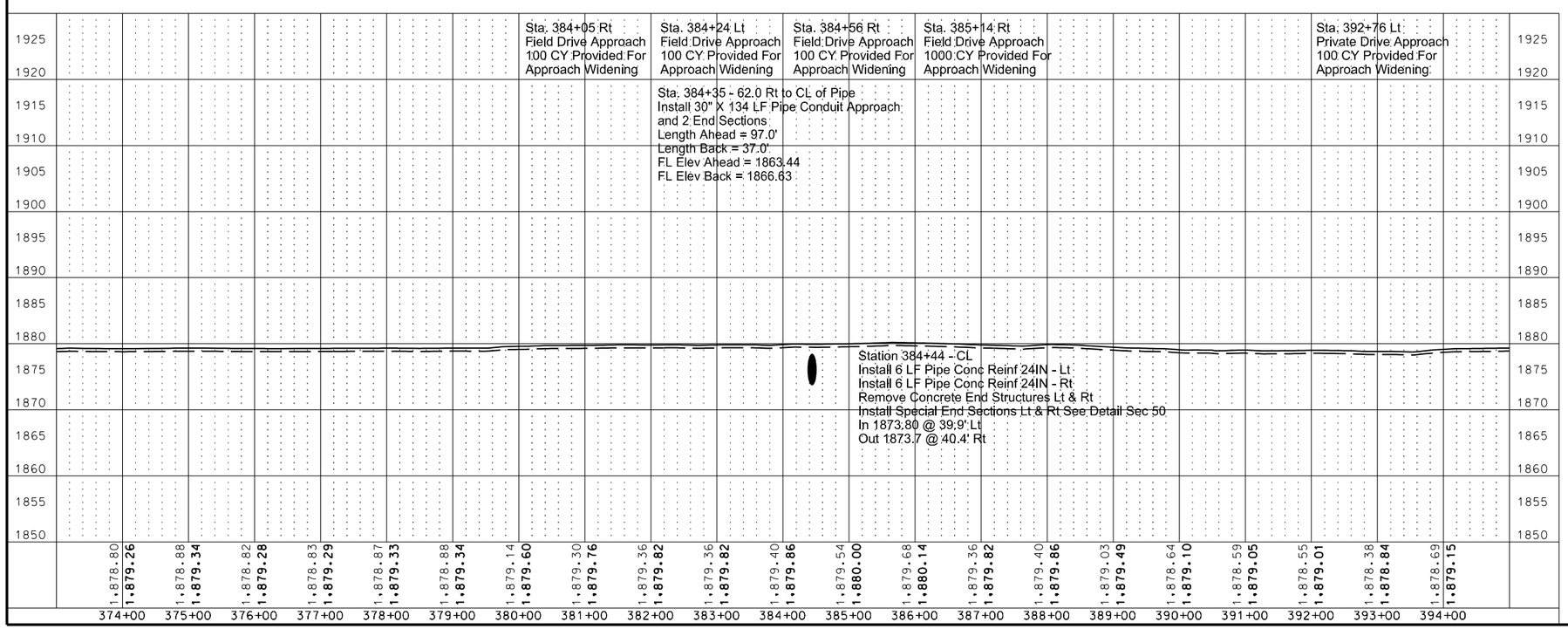

This document was originally issued and sealed by William Doerr, Registration Number PE- 7113, on 12/04/15 and the original document is stored at the North Dakota Department of Transportation

Plan and Profile

ND 58

Jct 200 to Jct 1804

STATE	PROJECT NO.	SECTION NO.	SHEET NO.
ND	SOIB-7-058(013)000	60	19

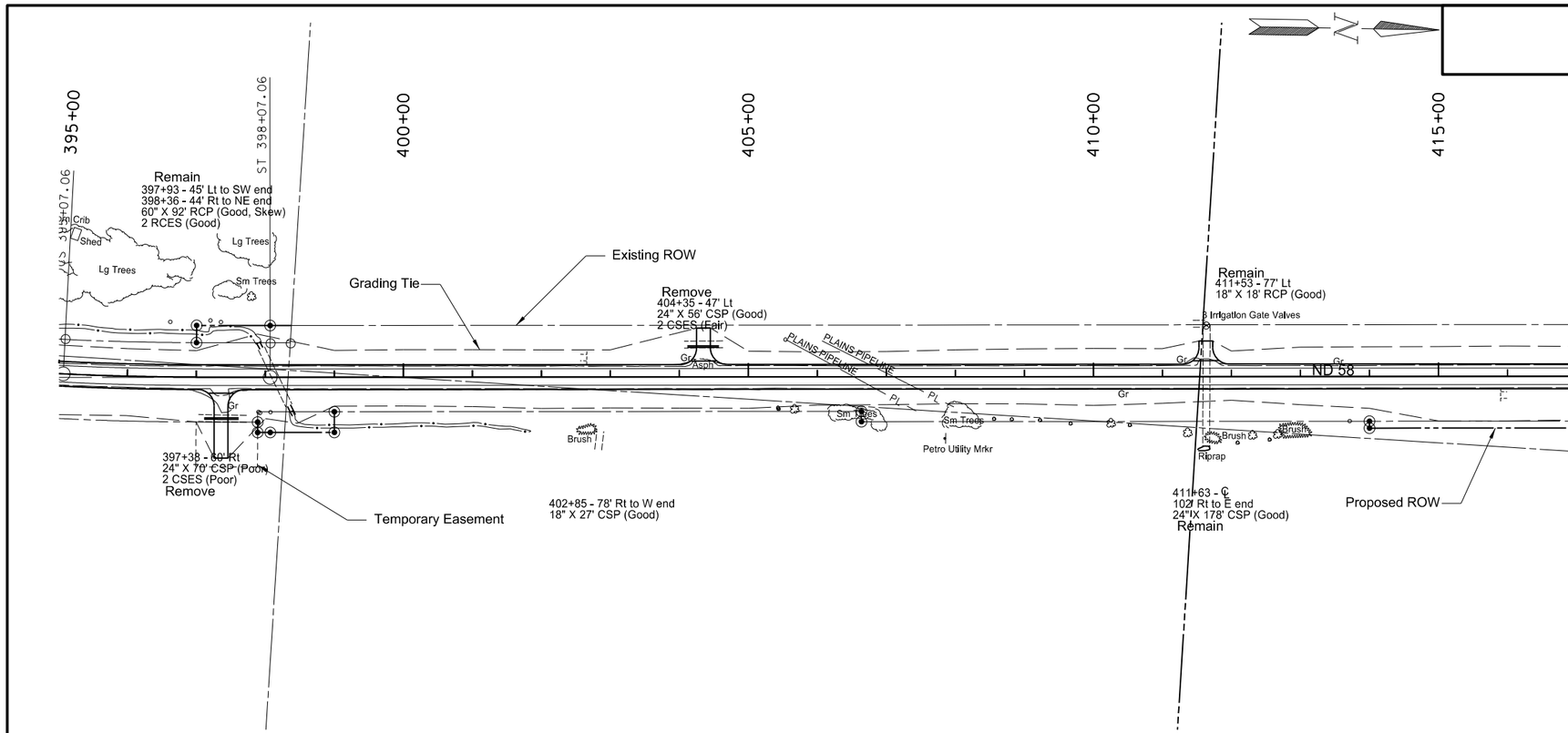

SPEC	CODE	BID ITEM	QUANTITY	UNIT
202	0174	REMOVAL OF PIPE ALL TYPES AND SIZES		
		397+38 Rt	70	LF
		404+35 Lt	56	LF
714	1310	PIPE CONC REINF 60IN CL III		
		398+14 ℄ Pipe - Lt	10	LF
		398+14 ℄ Pipe - Rt	16	LF
714	4106	PIPE CONDUIT 24IN-APPROACH		
		397+36 Rt	50	LF
		404+35 Lt	46	LF
714	9660	REMOVE AND RELAY END SECTION-ALL TYPES & SIZES		
		398+14 ℄ Pipe - Lt	1	EA
		398+14 ℄ Pipe - Rt	1	EA

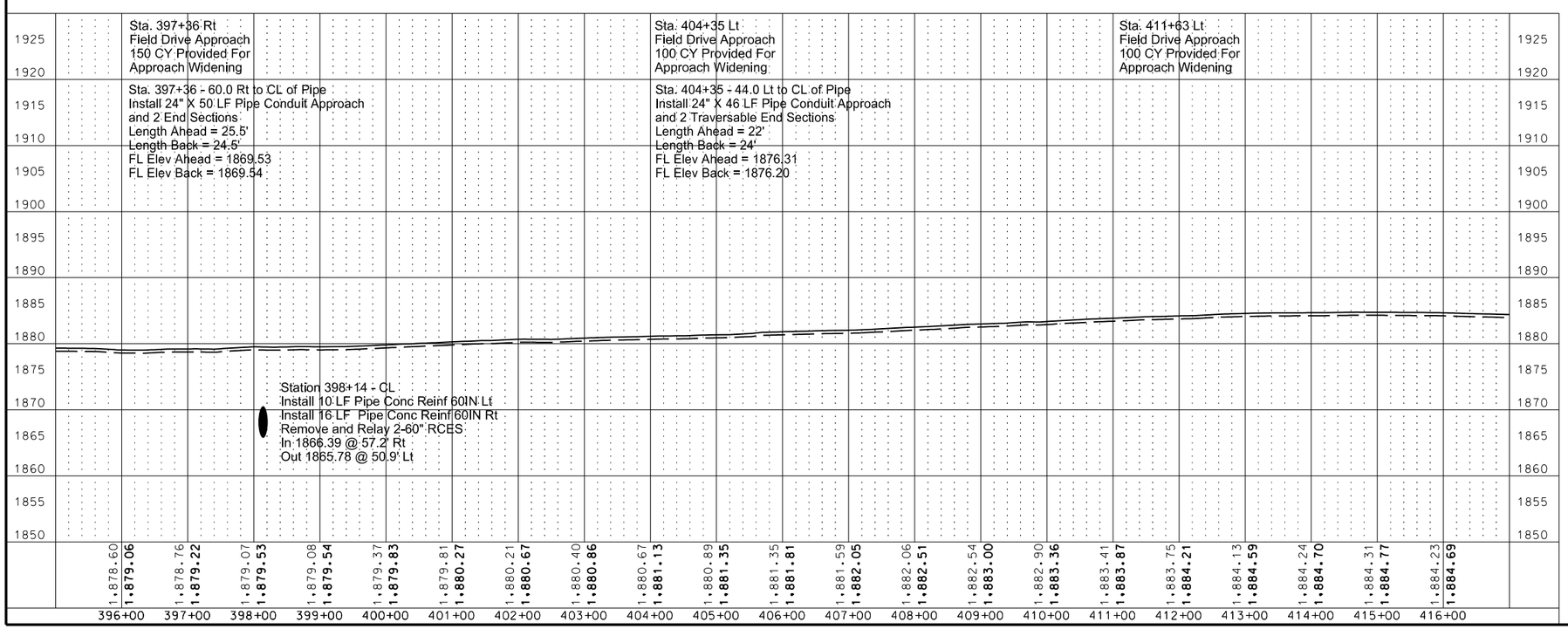

This document was originally issued and sealed by William Doerr, Registration Number PE- 7113, on 12/04/15 and the original document is stored at the North Dakota Department of Transportation

Plan and Profile

ND 58

Jct 200 to Jct 1804

STATE	PROJECT NO.	SECTION NO.	SHEET NO.
ND	SOIB-7-058(013)000	60	20

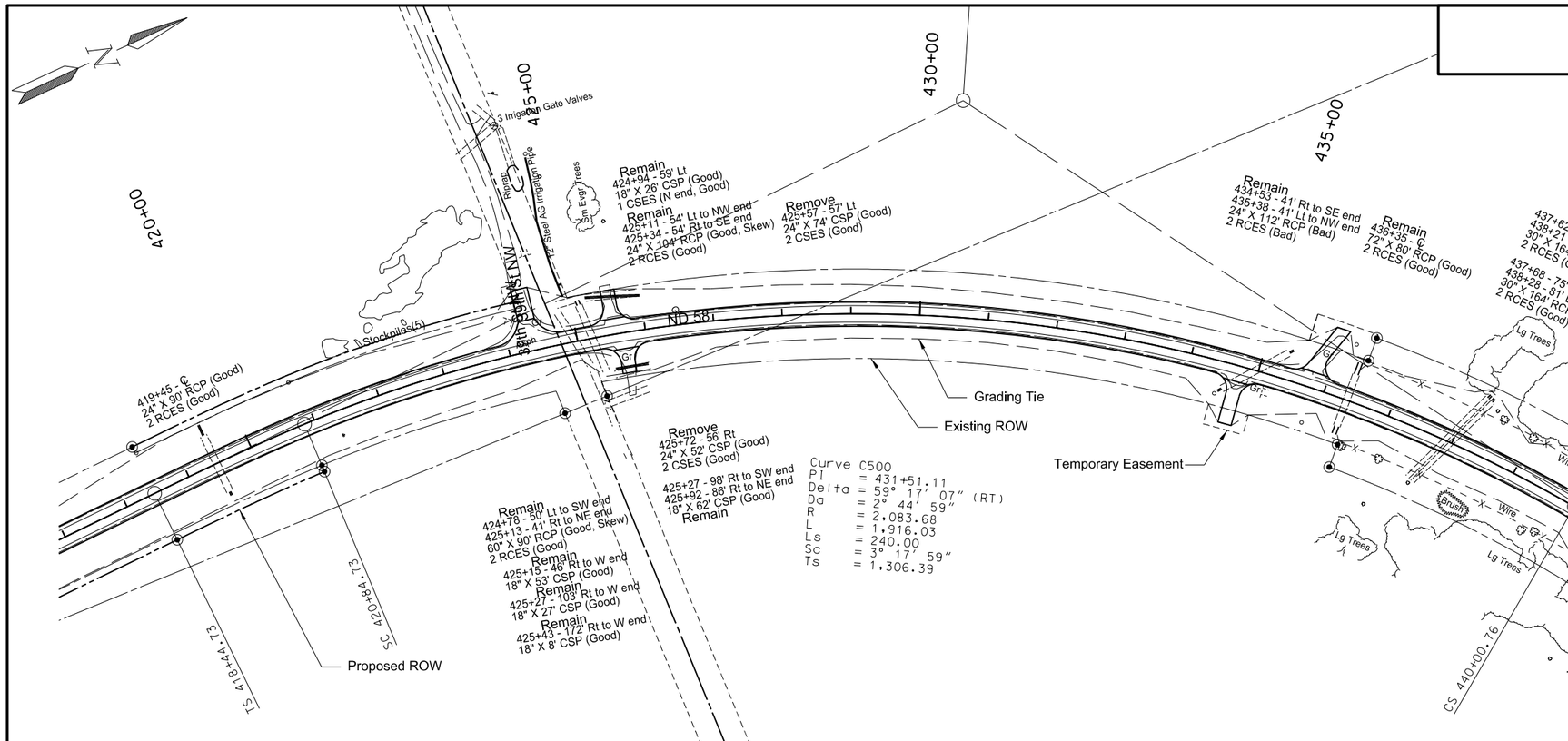

SPEC	CODE	BID ITEM	QUANTITY	UNIT
202	0112	REMOVAL OF CONCRETE		
		425+14 Rt (Irrigation Structure)	1	SY
202	0169	REMOVAL OF END SECTION-ALL TYPES & SIZES		
		419+45 ℄ Pipe - Lt	1	EA
		425+22 ℄ Pipe - Lt	1	EA
		434+96 ℄ Pipe - Lt	1	EA
		434+96 ℄ Pipe - Rt	1	EA
202	0174	REMOVAL OF PIPE ALL TYPES AND SIZES		
		425+57 Lt	74	LF
		425+72 Rt	52	LF
714	0615	PIPE CONC REINF 24IN CL III		
		419+45 ℄ Pipe - Lt	10	LF
		419+45 ℄ Pipe - Rt	6	LF
714	0820	PIPE CONC REINF 30IN CL III		
		438+23 ℄ Pipe - Lt	6	LF
		438+29 ℄ Pipe - Lt	6	LF
714	1510	PIPE CONC REINF 72IN CL III		
		436+35 ℄ Pipe - Lt	18	LF
		436+35 ℄ Pipe - Rt	12	LF
714	3023	END SECT - TRAVERSABLE REINF CONC 24IN CL III		
		419+45 ℄ - Lt	1	EA
		425+22 ℄ - Lt	1	EA
		434+96 ℄ - Lt	1	EA
		434+96 ℄ - Rt	1	EA
714	4106	PIPE CONDUIT 24IN-APPROACH		
		425+55 Lt	80	LF
		425+68 Rt	48	LF
714	9660	REMOVE AND RELAY END SECTION - ALL TYPES & SIZES		
		419+45 ℄ - Rt	1	EA
		436+35 ℄ - Lt	1	EA
		436+35 ℄ - Rt	1	EA
		438+23 ℄ - Lt	1	EA
		438+29 ℄ - Lt	1	EA

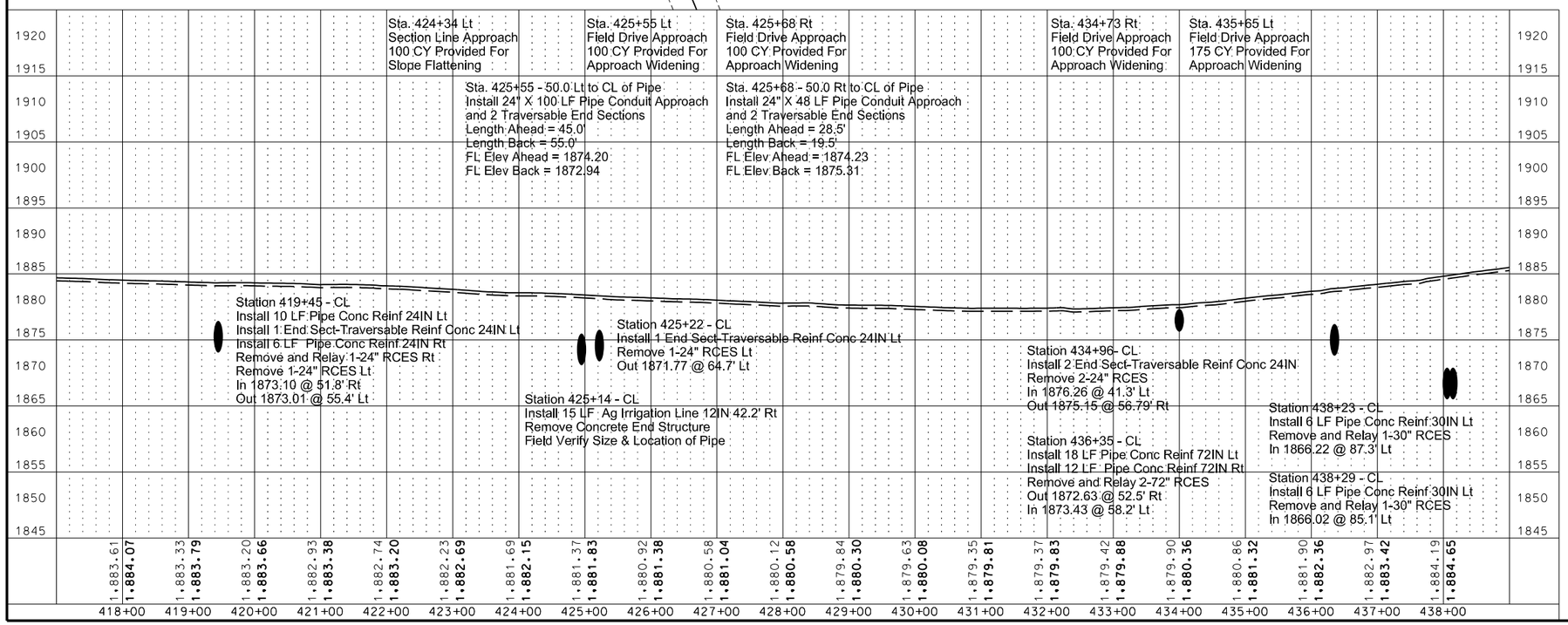

This document was originally issued and sealed by William Doerr, Registration Number PE- 7113, on 12/04/15 and the original document is stored at the North Dakota Department of Transportation

Plan and Profile

ND 58

Jct 200 to Jct 1804

STATE	PROJECT NO.	SECTION NO.	SHEET NO.
ND	SOIB-7-058(013)000	60	21

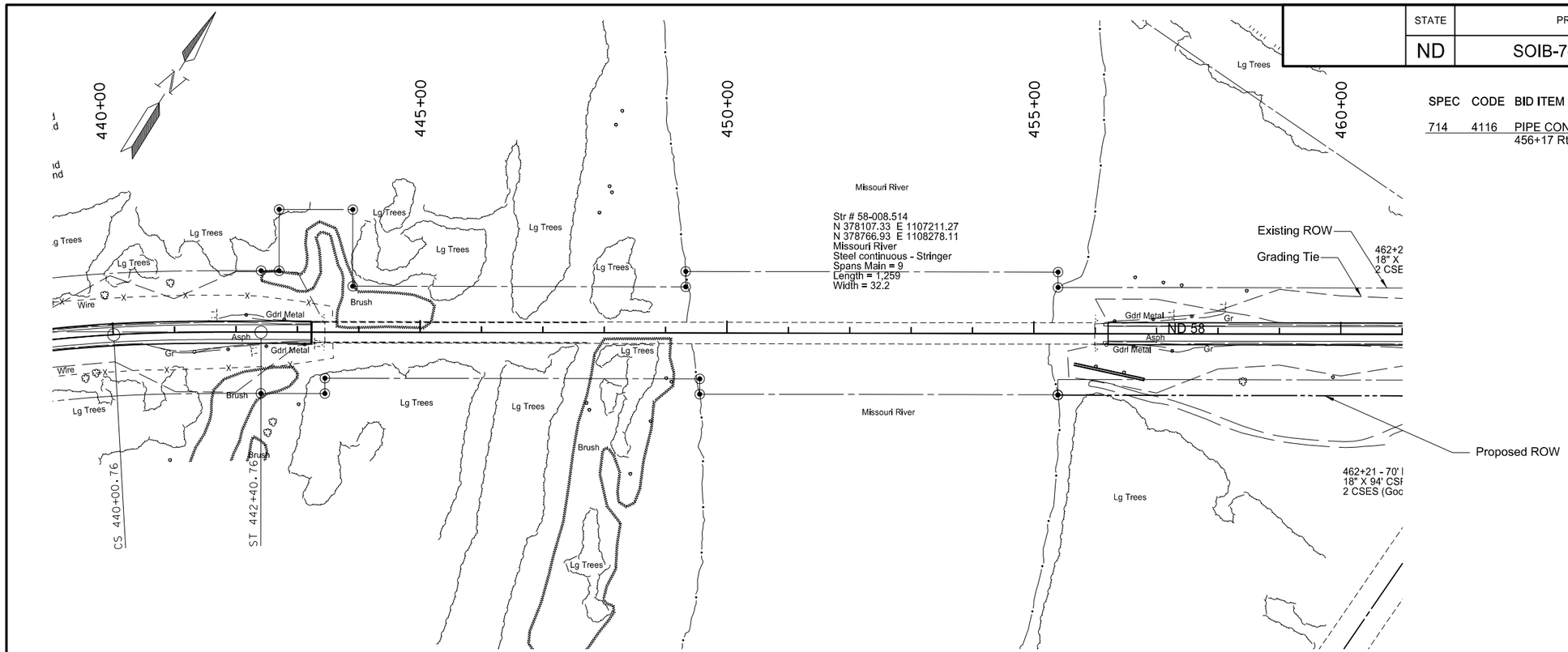

SPEC	CODE	BID ITEM	QUANTITY	UNIT
714	4116	PIPE CONDUIT 36IN-APPROACH 456+17 Rt	118	LF

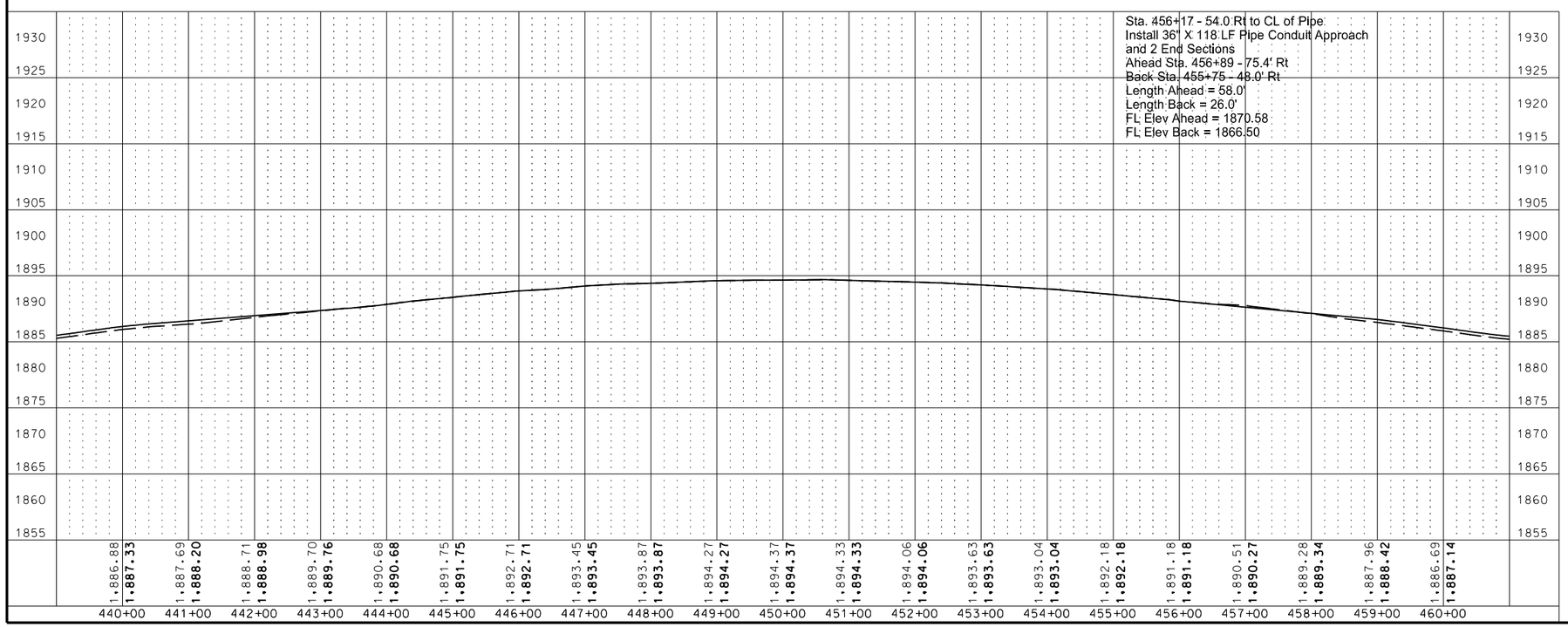

This document was originally issued and sealed by William Doerr, Registration Number PE- 7113, on 12/04/15 and the original document is stored at the North Dakota Department of Transportation

Plan and Profile

ND 58

Jct 200 to Jct 1804

STATE	PROJECT NO.	SECTION NO.	SHEET NO.
ND	SOIB-7-058(013)000	60	22

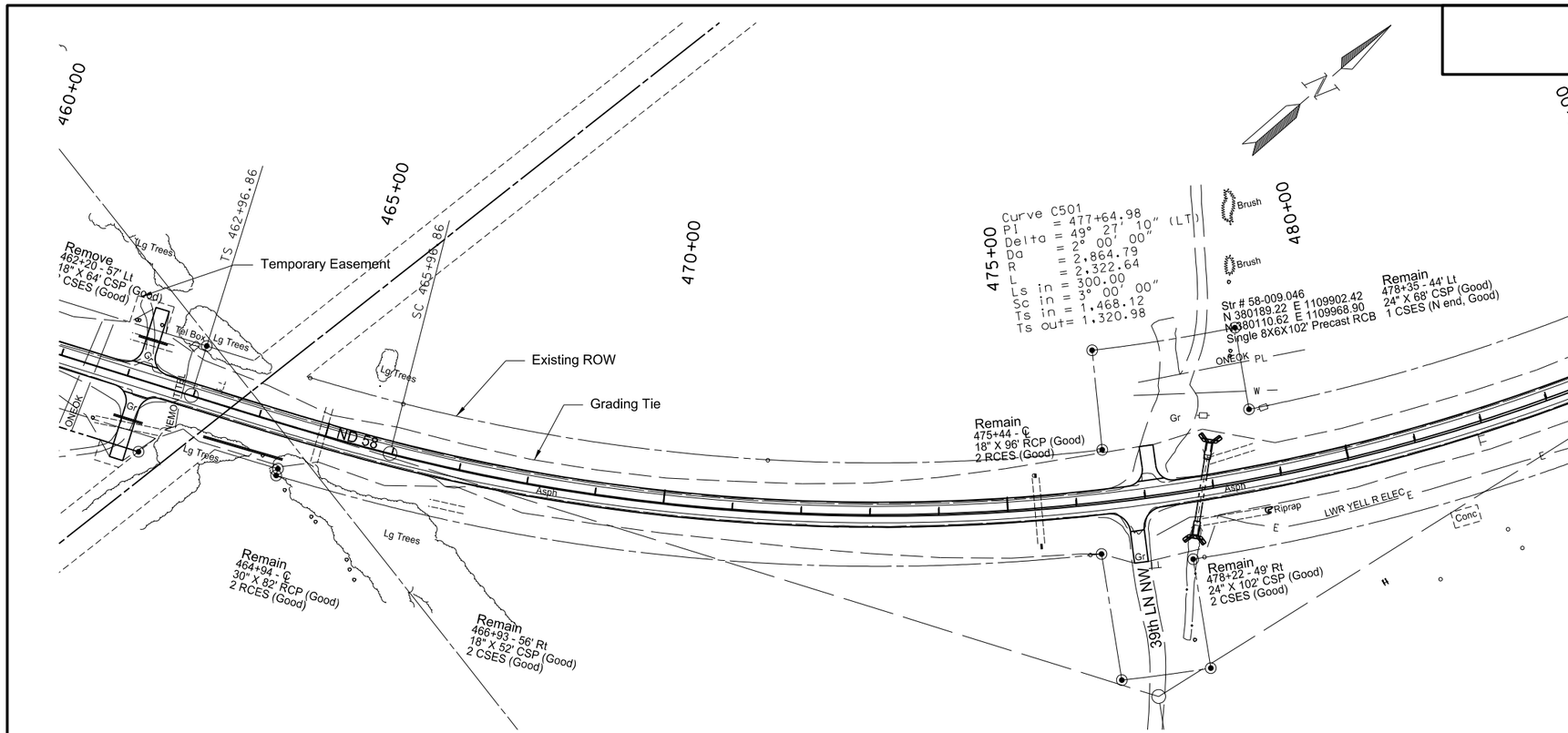

SPEC	CODE	BID ITEM	QUANTITY	UNIT
202	0169	REMOVAL OF END SECTION-ALL TYPES & SIZES		
		464+95 ℄ Pipe - Rt	1	EA
		464+95 ℄ Pipe - Lt	1	EA
202	0174	REMOVAL OF PIPE ALL TYPES AND SIZES		
		462+20 Lt	64	LF
		462+20 Rt	94	LF
714	0310	PIPE CONC REINF 18IN CL III		
		475+44 ℄ Pipe - Lt	8	LF
		475+44 ℄ Pipe - Rt	6	LF
714	3036	END SECT - TRAVERSABLE REINF CONC 36IN CL III		
		464+95 ℄ - Lt	1	EA
		464+95 ℄ - Rt	1	EA
714	4106	PIPE CONDUIT 24IN-APPROACH		
		462+20 Rt	44	LF
		462+20 Lt	44	LF
		464+00 Rt	44	LF
714	9660	REMOVE AND RELAY END SECTION - ALL TYPES & SIZES		
		475+44 ℄ - Rt	1	EA
		475+44 ℄ - Lt	1	EA

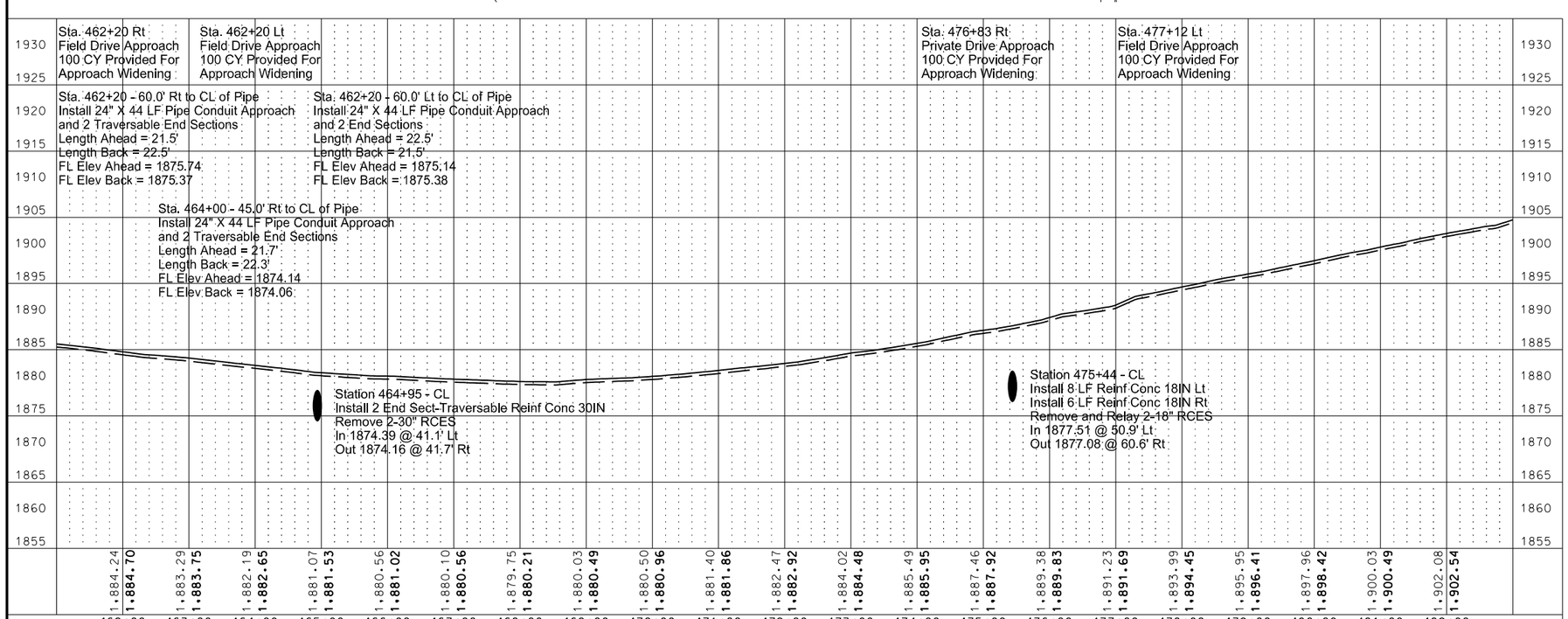

This document was originally issued and sealed by William Doerr, Registration Number PE- 7113, on 12/04/15 and the original document is stored at the North Dakota Department of Transportation

Plan and Profile

ND 58

Jct 200 to Jct 1804

STATE	PROJECT NO.	SECTION NO.	SHEET NO.
ND	SOIB-7-058(013)000	60	23

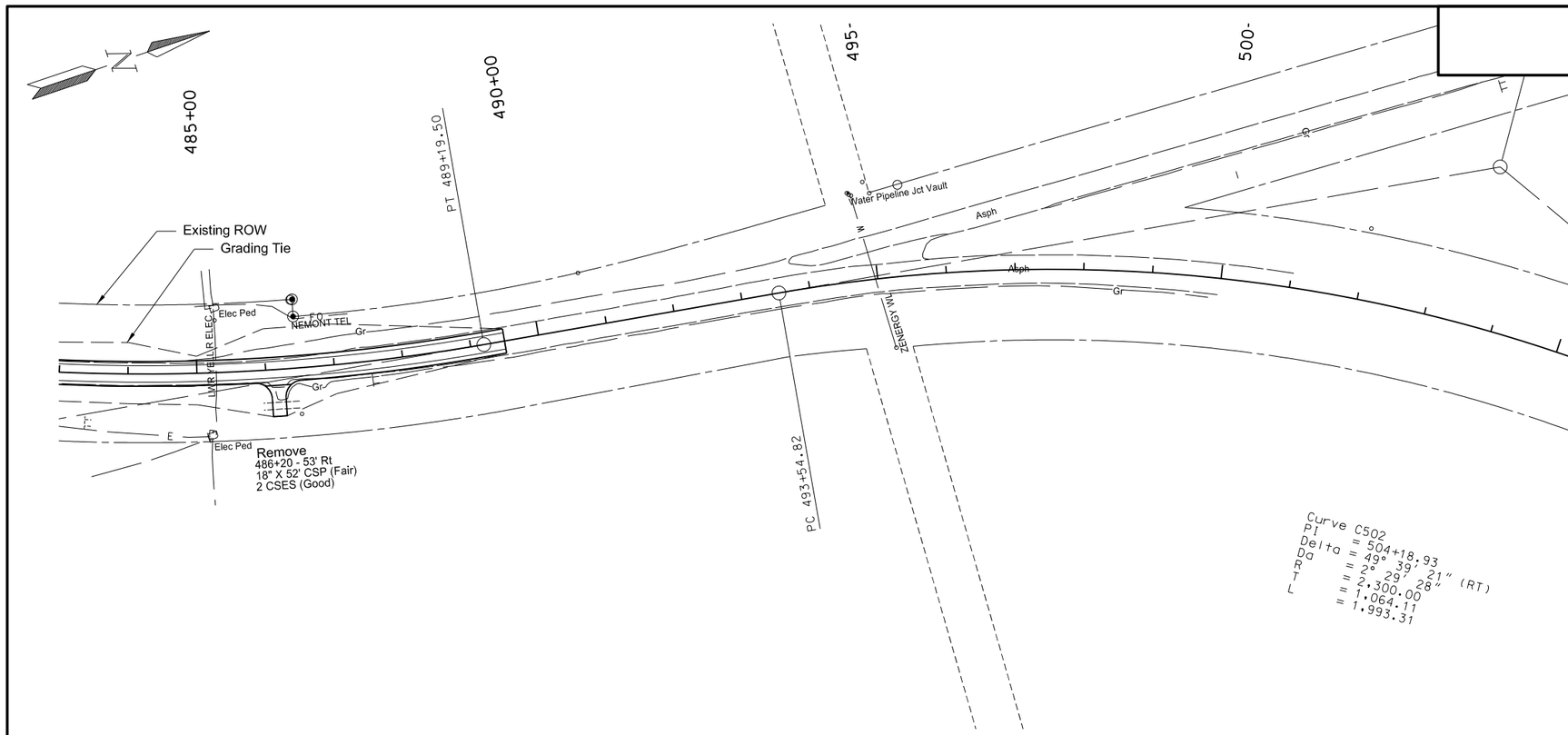

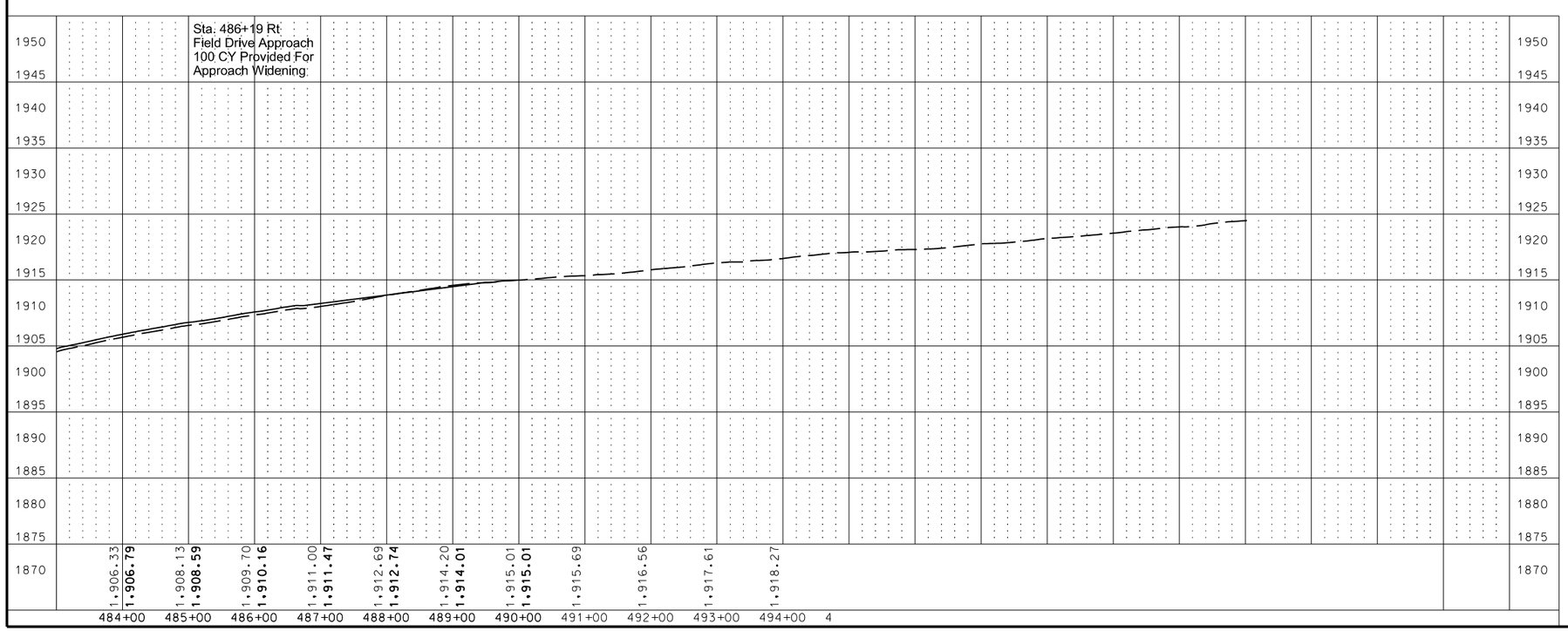

This document was originally issued and sealed by William Doerr, Registration Number PE- 7113, on 12/04/15 and the original document is stored at the North Dakota Department of Transportation

Plan and Profile

ND 58

Jct 200 to Jct 1804

NOTE:

Unavoidable permanent impacts will be mitigated onsite, adjacent to the project, or at a NDDOT approved mitigation site or bank in accordance with the mitigation guidance.[2,3]

0.92 acres of permanent impacts to USACE jurisdictional waters and 0.05 acres of permanent impacts to EO 11990 wetlands will require mitigation. The NDDOT proposes to mitigate by compensation: For the USACE jurisdictional impacts, 0.61 acres will be mitigated onsite by shifting the ditch and creating a new wetland parallel to existing and 0.31 acres will be mitigated offsite at the PCN 19840 surplus. For EO 11990 impacts, 0.05 acres at the Vollrath 15/21 Mitigation Bank in the Red River Regional Service Area. No mitigation is proposed for Artificial/Jurisdictional Irrigation Canal impacts per USACE and NDDOT discussions. 1.32 acres of temporary wetland impacts and 0.74 acres of temporary other water impacts will result from construction activities. Temporary impact areas will be graded to preconstruction contours.

Wetland Impact Table

Wetland Number	Location	Cowardin Class.	Wetland Type	Wetland Size (acres)	Wetland Feature	USACE Jurisdictional Wetlands[1]	Wetland Impacts (acres)		USFWS Easement Impacts (acres)		Wetland Mitigation								
											Mitigation Required			Bank		Onsite			
							Temp.	Perm.	Temp.	Perm.	EO 11990	USACE	USFWS	Location	acres	Mitigation Location; Ratio	acres	Constructed Site #	Constructed size (acres)
1	Sec. 32, T151N, R104W	PEMA	Basin	0.11	Natural	Yes					No	No	No						
2	Sec. 29, T151N, R104W	PEMAx	Ditch	0.02	Artificial	Yes					No	No	No						
3a	Sec. 5, T151N, R104W	PEMAx	Ditch	0.46	Artificial	Yes	0.00	0.46			No	Yes	No			1:1 at Wetland 3a	0.46		0.46
3b	Sec. 32, T152N, R104W	PEMAx	Ditch	0.15	Artificial	Yes	0.01	0.14			No	Yes	No			1:1 at Wetland 3b	0.14		0.15
3c	Sec. 32, T152N, R104W	PEMAx	Ditch	0.00	Artificial	Yes	0.00	0.01			No	Yes	No			1:1 at Wetland 3b	0.01		
4	Sec. 5, T151N, R104W	PEMAx	Ditch	0.01	Artificial	Yes	0.01	0.01			No	No	No						
5	Sec. 32, T152N, R104W	PEMAx	Ditch	0.02	Artificial	Yes					No	No	No						
6a	Sec. 5, T151N, R104W	PEMAx	Ditch	1.13	Artificial	Yes	0.33	0.06			No	Yes	No			1:1 at PCN 19840 (Offsite)	0.06		
6b	Sec. 32, T152N, R104W	PEMAx	Ditch	0.52	Artificial	Yes	0.22	0.25			No	Yes	No			1:1 at PCN 19840 (Offsite)	0.25		
6c	Sec. 32, T152N, R104W	PEMAx	Ditch	0.02	Artificial	Yes	0.01	0.00			No	No	No						
7a	Sec. 32, T152N, R104W	PEMAx	Ditch	0.62	Artificial	Yes	0.52	0.03			No	No	No						
7b	Sec. 29, T152N, R104W	PEMAx	Ditch	0.03	Artificial	Yes	0.01	0.03			No	No	No						
8	Sec. 29, T152N, R104W	PEMA	Slope	0.05	Natural	Yes					No	No	No						

This document was originally issued and sealed by William Doerr, Registration Number PE- 7113, on 12/10/15 and the original document is stored at the North Dakota Department of Transportation

Wetland Impact Table

ND 58

Jct 200 to Jct 1804

Wetland Impact Table

Wetland Number	Location	Cowardin Class.	Wetland Type	Wetland Size (acres)	Wetland Feature	USACE Jurisdictional Wetlands[1]	Wetland Impacts (acres)		USFWS Easement Impacts (acres)		Wetland Mitigation								
											Mitigation Required			Bank		Onsite			
							Temp.	Perm.	Temp.	Perm.	EO 11990	USACE	USFWS	Location	acres	Mitigation Location; Ratio	acres	Constructed Site #	Constructed size (acres)
9	Sec. 29, T152N, R104W	PEMA	Slope	0.10	Natural	Yes					No	No	No						
10a	Sec. 29, T152N, R104W	PEMAx	Ditch	0.10	Artificial	Yes	0.04	0.05			No	No	No						
10b	Sec. 29, T152N, R104W	PEMAx	Ditch	0.01	Artificial	Yes	0.00	0.01			No	No	No						
11a	Sec. 29, T152N, R104W	PEMAx	Ditch	0.06	Artificial	Yes	0.02	0.04			No	No	No						
11b	Sec. 29, T152N, R104W	PEMAx	Ditch	0.13	Artificial	Yes	0.05	0.04			No	No	No						
12	Sec. 29, T152N, R104W	PEMA	Slope	0.56	Natural	No					No	No	No						
15	Sec. 29, T152N, R104W	PEMAx	Ditch	0.02	Artificial	Yes					No	No	No						
14	Sec. 17, T152N, R104W	PEMC	Riverine	0.20	Natural	Yes					No	No	No						
13	Sec. 17, T152N, R104W	PEMC	Riverine	0.62	Natural	Yes	0.06	0.03			Yes	No	No	1:1 at Vollrath 15/21	0.03				
16	Sec. 17, T152N, R104W	PEMAx	Riverine	1.98	Natural	Yes	0.04	0.02			Yes	No	No	1:1 at Vollrath 15/21	0.02				
			Totals	**6.92**			**1.32**	**1.18**	**0.00**	**0.00**					**0.05**		**0.92**		**0.61**

Other Waters Impact Table

Other Waters											Other Water Mitigation				
			Size				Impacts to Other Waters				Mitigation Required				
							Acres		Linear Feet						
Number	Location	Type	Acres	Linear Feet	Feature	USACE Jurisdictional[1]	Temp	Perm	Temp	Perm	EO 11990	USACE	USFWS	Mitigation Location; ratio	Method
OW 1a	Sec.32, T151N, R104W	Irrigation Canal	0.00	65.00	Artificial	Yes					No	No	No		
OW 1b	Sec.31, T151N, R104W	Irrigation Canal	0.18	400.00	Artificial	Yes					No	No	No		
OW 1c	Sec.29, T151N, R104W	Irrigation Canal	0.01	140.00	Artificial	Yes					No	No	No		

This document was originally issued and sealed by William Doerr, Registration Number PE- 7113, on 12/10/15 and the original document is stored at the North Dakota Department of Transportation

Wetland Impact Table

ND 58

Jct 200 to Jct 1804

Other Waters Impact Table

Other Waters											Other Water Mitigation				
			Size				Impacts to Other Waters				Mitigation Required				
							Acres		Linear Feet						
Number	Location	Type	Acres	Linear Feet	Feature	USACE Jurisdictional[1]	Temp	Perm	Temp	Perm	EO 11990	USACE	USFWS	Mitigation Location; ratio	Method
OW 1d	Sec.30, T151N, R104W	Irrigation Canal	0.43	1265.00	Artificial	Yes	0.11	0.01	825.00	12.00	No	No	No		
OW 1e	Sec.30, T151N, R104W	Irrigation Canal	0.29	1088.00	Artificial	Yes	0.07	0.02	768.00	188.00	No	No	No		
OW 1f	Sec.30, T151N, R104W	Irrigation Canal	0.01	30.00	Artificial	Yes	0.00	0.01	0.00	30.00	No	No	No		
OW 1g	Sec.30, T151N, R104W	Irrigation Canal	0.20	1098.00	Artificial	Yes	0.01	0.08	50.00	510.00	No	No	No		
OW 1h	Sec.30, T151N, R104W	Irrigation Canal	0.60	1317.00	Artificial	Yes	0.01	0.04	20.00	110.00	No	No	No		
OW 1i	Sec.30, T151N, R104W	Irrigation Canal	0.02	291.00	Artificial	Yes					No	No	No		
OW 1j	Sec.19, T151N, R104W	Irrigation Canal	0.04	340.00	Artificial	Yes	0.00	0.04	0.00	340.00	No	No	No		
OW 2a	Sec.30, T151N, R104W	Irrigation Canal	0.02	82.00	Artificial	Yes	0.01	0.01	10.00	28.00	No	No	No		
OW 2b	Sec.29, T151N, R104W	Irrigation Canal	0.04	98.00	Artificial	Yes	0.01	0.01	22.00	10.00	No	No	No		
OW 3	Sec.29, T151N, R104W	Irrigation Canal	0.05	341.00	Artificial	Yes	0.01	0.01	10.00	17.00	No	No	No		
OW 4a	Sec.20, T151N, R104W	Irrigation Canal	0.02	369.00	Artificial	Yes	0.00	0.02	0.00	369.00	No	No	No		
OW 4b	Sec.20, T151N, R104W	Irrigation Canal	0.33	461.00	Artificial	Yes	0.01	0.14	20.00	286.00	No	No	No		
OW 4c	Sec.20, T151N, R104W	Irrigation Canal	0.08	382.00	Artificial	Yes	0.00	0.08	0.00	374.00	No	No	No		
OW 4d	Sec.20, T151N, R104W	Irrigation Canal	0.05	388.00	Artificial	Yes	0.00	0.05	0.00	384.00	No	No	No		
OW 5a	Sec.20, T151N, R104W	Irrigation Canal	0.19	1085.00	Artificial	Yes	0.00	0.19	0.00	1065.00	No	No	No		
OW 5b	Sec.20, T151N, R104W	Irrigation Canal	0.06	221.00	Artificial	Yes	0.01	0.06	15.00	210.00	No	No	No		
OW 6a	Sec.20, T151N, R104W	Irrigation Canal	0.19	630.00	Artificial	Yes	0.01	0.01	17.00	30.00	No	No	No		
OW 6b	Sec.20, T151N, R104W	Irrigation Canal	0.05	463.00	Artificial	Yes	0.01	0.01	40.00	58.00	No	No	No		

This document was originally issued and sealed by William Doerr, Registration Number PE- 7113, on 12/04/15 and the original document is stored at the North Dakota Department of Transportation

Wetland Impact Table

ND 58

Jct 200 to Jct 1804

Other Waters Impact Table

Other Waters											Other Water Mitigation				
			Size				Impacts to Other Waters				Mitigation Required				
							Acres		Linear Feet						
Number	Location	Type	Acres	Linear Feet	Feature	USACE Jurisdictional[1]	Temp	Perm	Temp	Perm	EO 11990	USACE	USFWS	Mitigation Location; ratio	Method
OW 6c	Sec.19, T151N, R104W	Irrigation Canal	0.03	116.00	Artificial	Yes	0.01	0.01	10.00	48.00	No	No	No		
OW 7a	Sec.18, T151N, R104W	Irrigation Canal	0.13	463.00	Artificial	Yes	0.01	0.00	16.00	0.00	No	No	No		
OW 7b	Sec.17, T151N, R104W	Irrigation Canal	0.12	454.00	Artificial	Yes					No	No	No		
OW 8a	Sec.17, T151N, R104W	Irrigation Canal	0.47	1248.00	Artificial	Yes	0.20	0.01	1248.00	5.00	No	No	No		
OW 8b	Sec.17, T151N, R104W	Irrigation Canal	0.36	1201.00	Artificial	Yes					No	No	No		
OW 9a	Sec.18, T151N, R104W	Fourmile Creek	0.09	151.00	Natural	Yes	0.01	0.04	10.00	60.00	No	No	No		
OW 9b	Sec.17, T151N, R104W	Fourmile Creek	0.06	99.00	Natural	Yes	0.01	0.02	10.00	40.00	No	No	No		
OW 10a	Sec.18, T151N, R104W	Irrigation Canal	0.03	115.00	Artificial	Yes	0.01	0.01	10.00	18.00	No	No	No		
OW 10b	Sec.17, T151N, R104W	Irrigation Canal	0.20	711.00	Artificial	Yes	0.01	0.01	36.00	2.00	No	No	No		
OW 10c	Sec.17, T151N, R104W	Irrigation Canal	0.03	374.00	Artificial	Yes					No	No	No		
OW 10d	Sec.8, T151N, R104W	Irrigation Canal	0.15	1092.00	Artificial	Yes	0.01	0.09	80.00	797.00	No	No	No		
OW 10e	Sec.8, T151N, R104W	Irrigation Canal	0.35	1083.00	Artificial	Yes					No	No	No		
OW 10f	Sec.8, T151N, R104W	Irrigation Canal	0.05	94.00	Artificial	Yes	0.01	0.01	16.00	10.00	No	No	No		
OW 10g	Sec.8, T151N, R104W	Irrigation Canal	0.47	2112.00	Artificial	Yes	0.01	0.01	27.00	48.00	No	No	No		
OW 10h	Sec.8, T151N, R104W	Irrigation Canal	0.03	240.00	Artificial	Yes	0.01	0.01	46.00	40.00	No	No	No		
OW 10i	Sec.8, T151N, R104W	Irrigation Canal	0.13	600.00	Artificial	Yes	0.01	0.02	16.00	102.00	No	No	No		
OW 11a	Sec.5, T151N, R104W	Irrigation Canal	0.55	1053.00	Artificial	Yes	0.01	0.47	40.00	856.00	No	No	No		
OW 11b	Sec.5, T151N, R104W	Irrigation Canal	0.02	46.00	Artificial	Yes	0.01	0.00	20.00	0.00	No	No	No		

This document was originally issued and sealed by William Doerr, Registration Number PE- 7113, on 12/04/15 and the original document is stored at the North Dakota Department of Transportation

Wetland Impact Table

ND 58

Jct 200 to Jct 1804

Other Waters Impact Table

Other Waters											Other Water Mitigation				
			Size				Impacts to Other Waters				Mitigation Required				
							Acres		Linear Feet						
Number	Location	Type	Acres	Linear Feet	Feature	USACE Jurisdictional[1]	Temp	Perm	Temp	Perm	EO 11990	USACE	USFWS	Mitigation Location; ratio	Method
OW 12	Sec.5, T151N, R104W	Irrigation Canal	0.02	132.00	Artificial	Yes					No	No	No		
OW 13	Sec.32, T152N, R104W	Irrigation Canal	0.01	96.00	Artificial	Yes	0.01	0.01	10.00	26.00	No	No	No		
OW 14a	Sec.29, T152N, R104W	Tributary	0.03	71.00	Natural	Yes					No	No	No		
OW 14b	Sec.29, T152N, R104W	Tributary	0.02	71.00	Natural	Yes					No	No	No		
OW 15a	Sec.29, T152N, R104W	Irrigation Canal	0.01	115.00	Artificial	Yes					No	No	No		
OW 15b	Sec.29, T152N, R104W	Irrigation Canal	0.01	247.00	Artificial	Yes					No	No	No		
OW 16a	Sec.29, T152N, R104W	Irrigation Canal	0.12	541.00	Artificial	Yes	0.05	0.01	386.00	100.00	No	No	No		
OW 16b	Sec.29, T152N, R104W	Irrigation Canal	0.01	73.00	Artificial	Yes	0.01	0.01	17.00	42.00	No	No	No		
OW 16c	Sec.20, T152N, R104W	Irrigation Canal	0.24	1315.00	Artificial	Yes					No	No	No		
OW 17a	Sec.20, T152N, R104W	Irrigation Canal	0.04	98.00	Artificial	Yes	0.01	0.00	11.00	36.00	No	No	No		
OW 17b	Sec.20, T152N, R104W	Irrigation Canal	0.30	753.00	Artificial	Yes					No	No	No		
OW 17c	Sec.20, T152N, R104W	Irrigation Canal	0.12	485.00	Artificial	Yes	0.01	0.01	12.00	16.00	No	No	No		
OW 17d	Sec.20, T152N, R104W	Irrigation Canal	0.20	2580.00	Artificial	Yes	0.01	0.01	20.00	20.00	No	No	No		
OW 18a	Sec.20, T152N, R104W	Irrigation Canal	0.12	902.00	Artificial	Yes					No	No	No		
OW 18b	Sec.20, T152N, R104W	Irrigation Canal	0.03	250.00	Artificial	Yes					No	No	No		
OW 19	Sec.17, T152N, R104W	Irrigation Canal	0.04	235.00	Artificial	Yes					No	No	No		
OW 20	Sec.17, T152N, R104W	Irrigation Canal	0.03	200.00	Artificial	Yes	0.01	0.01	13.00	25.00	No	No	No		
OW 21	Sec.17, T152N, R104W	Irrigation Canal	0.04	396.00	Artificial	Yes	0.01	0.01	10.00	9.00	No	No	No		

This document was originally issued and sealed by William Doerr, Registration Number PE- 7113, on 12/04/15 and the original document is stored at the North Dakota Department of Transportation

Wetland Impact Table

ND 58

Jct 200 to Jct 1804

Other Waters Impact Table

Other Waters											Other Water Mitigation				
			Size				Impacts to Other Waters				Mitigation Required				
							Acres		Linear Feet						
Number	Location	Type	Acres	Linear Feet	Feature	USACE Jurisdictional[1]	Temp	Perm	Temp	Perm	EO 11990	USACE	USFWS	Mitigation Location; ratio	Method
OW 22	Sec.17, T152N, R104W	Missouri River	6.52	985.00	Natural	Yes					No	No	No		
OW 23a	Sec.16, T152N, R104W	Irrigation Canal	0.22	423.00	Natural	Yes	0.01	0.01	11.00	24.00	No	No	No		
OW 23b	Sec.16, T152N, R104W	Irrigation Canal	0.28	461.00	Artificial	Yes	0.01	0.01	12.00	40.00	No	No	No		
		Totals	**14.54**	**32235.00**			**0.74**	**1.59**	**3884.00**	**6385.00**					

[1] A wetland Jurisdictional Determination was issued by the USACE on 12/03/2014; NWO-2014-2289-BIS.

[2] All impacts to natural wetlands (natural/jurisdictional and natural/non-jurisdictional), regardless of size, as well as impacts greater than 0.10 acre to artificial/jurisdictional wetlands require mitigation.

[3] All artificial/non-jurisdictional, deep water (impacts greater than 6.6 feet), Other Waters less than 300 linear feet (determined by the USACE on a case by case), and temporary impacts do not require mitigation.

Summary Impact Table

Total Permanent Impact Summary		Temporary Impacts and additional information	
Wetland Type	Total (Acres)	Wetland Type	Total (Acres/Lf)
Natural/JD	0.05	Temporary JD	1.32
Natural/Non-JD	0.00	Non-JD Temporary	0.00
Artificial/JD	1.13	Permanent JD > 0.10	0.92
Artificial /Non-JD	0.00	Permanent OW	1.59 ac 6385 ft.
Total	1.18	Temporary OW	0.74 ac 3884 ft.

This document was originally issued and sealed by William Doerr, Registration Number PE- 7113, on 12/10/15 and the original document is stored at the North Dakota Department of Transportation

Wetland Impact Table

ND 58

Jct 200 to Jct 1804

STATE	PROJECT NO.	SECTION NO.	SHEET NO.
ND	SOIB-7-058(013)000	75	7

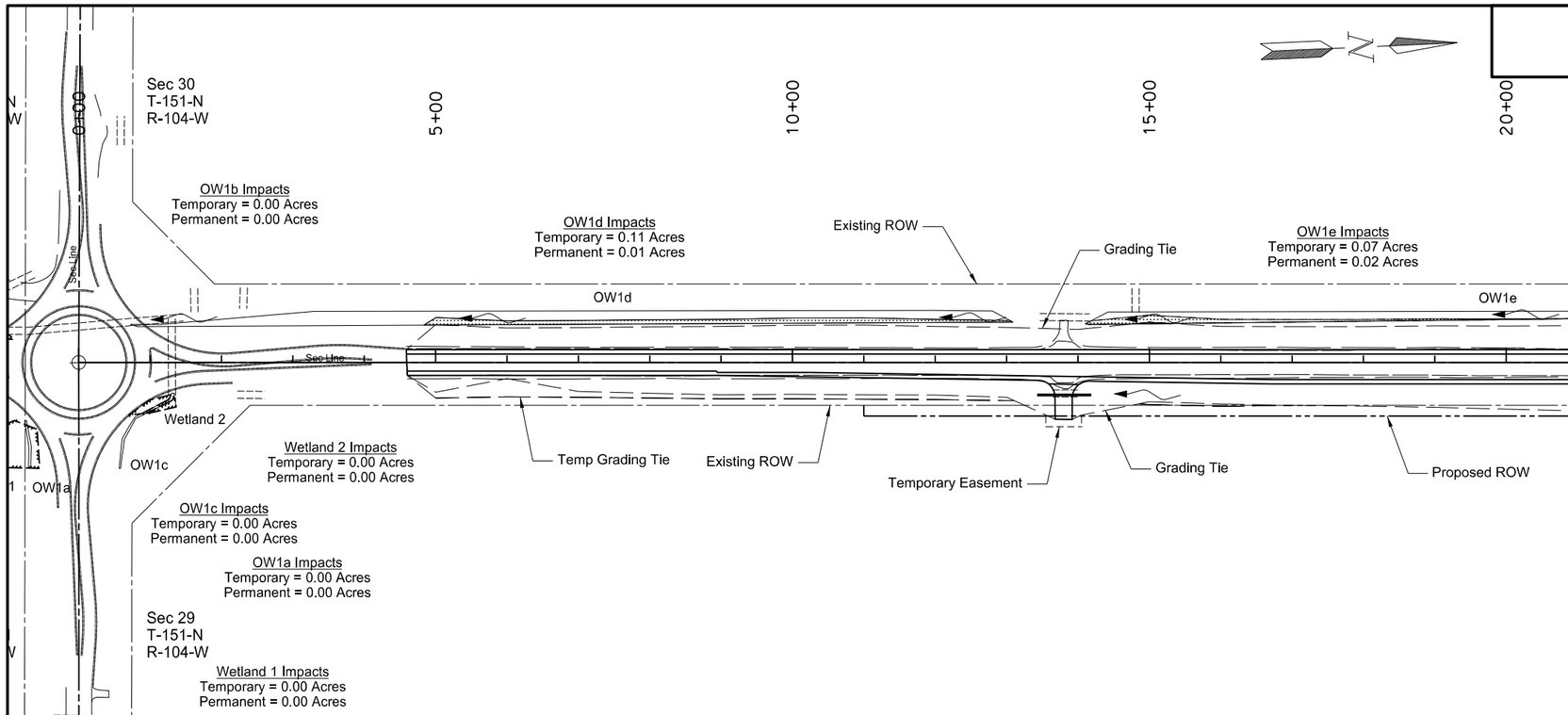

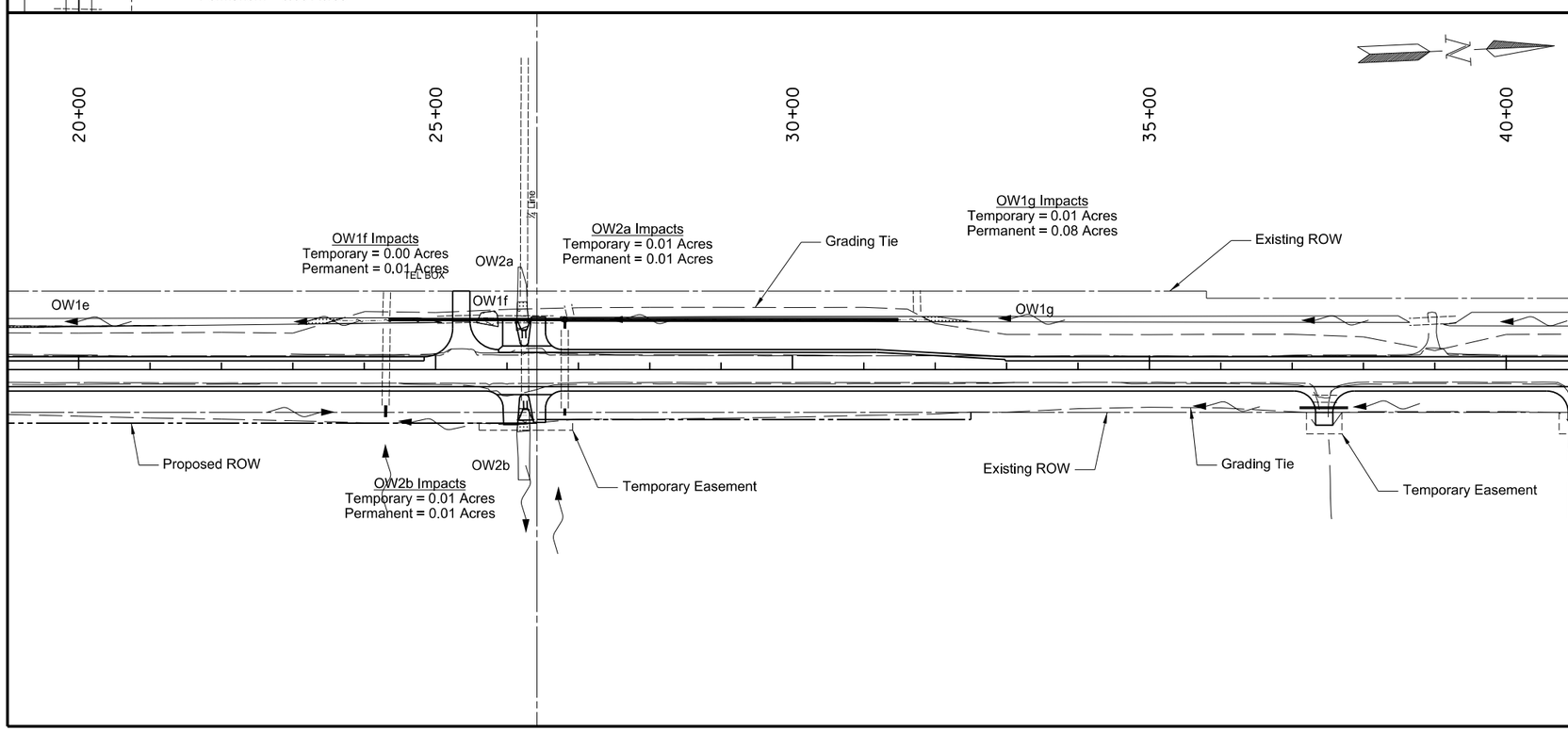

Other Water Permanent Impacts

Other Water Temporary Impacts

Permanent Wetland Impact

Temporary Wetland Impact

Wetland Mitigation

This document was originally issued and sealed by William Doerr, Registration Number PE- 7113, on 12/04/15 and the original document is stored at the North Dakota Department of Transportation

Wetland, Mitigation & Environmental

ND 58

Jct 200 to Jct 1804

STATE	PROJECT NO.	SECTION NO.	SHEET NO.
ND	SOIB-7-058(013)000	75	8

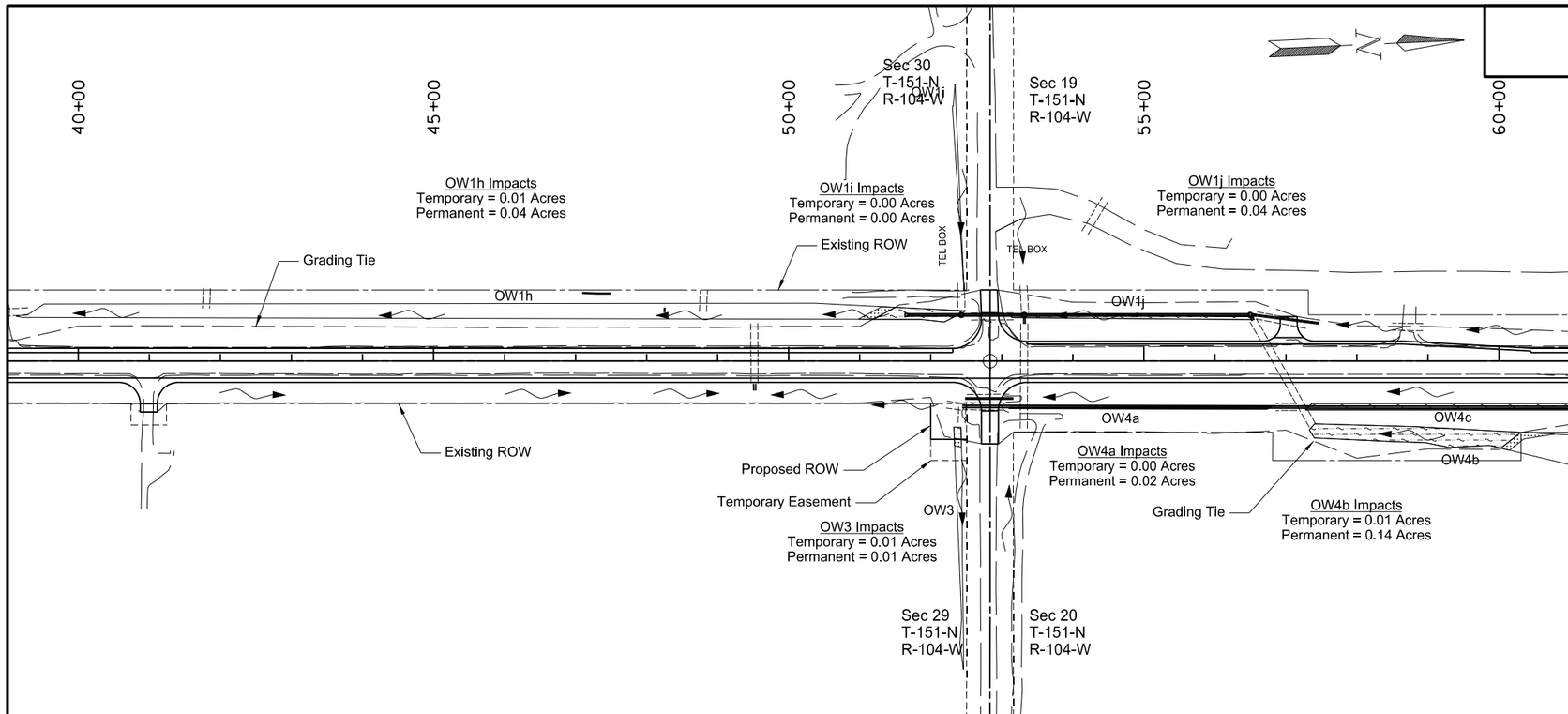

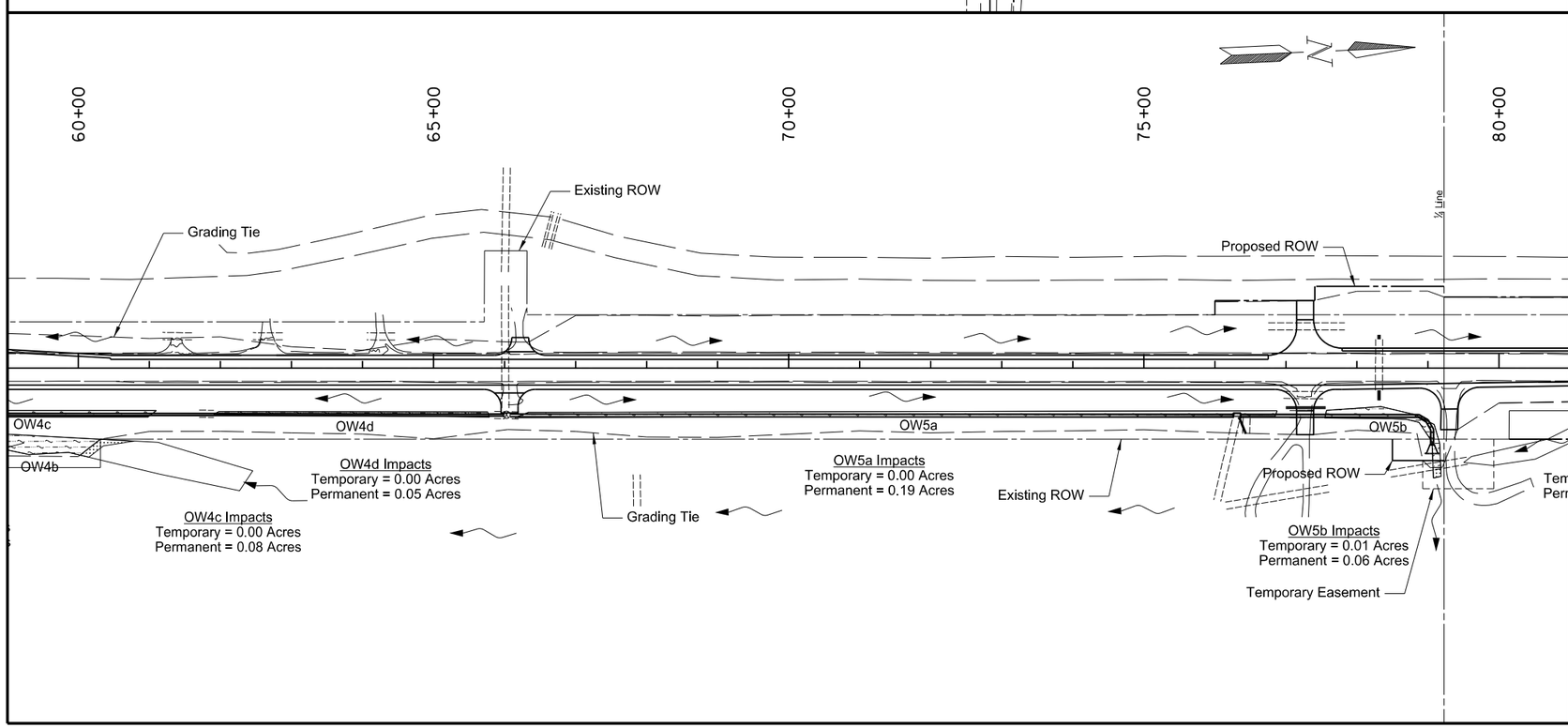

Other Water Permanent Impacts

Other Water Temporary Impacts

Permanent Wetland Impact

Temporary Wetland Impact

Wetland Mitigation

This document was originally issued and sealed by William Doerr, Registration Number PE- 7113, on 12/04/15 and the original document is stored at the North Dakota Department of Transportation

Wetland, Mitigation & Environmental

ND 58

Jct 200 to Jct 1804

STATE	PROJECT NO.	SECTION NO.	SHEET NO.
ND	SOIB-7-058(013)000	75	9

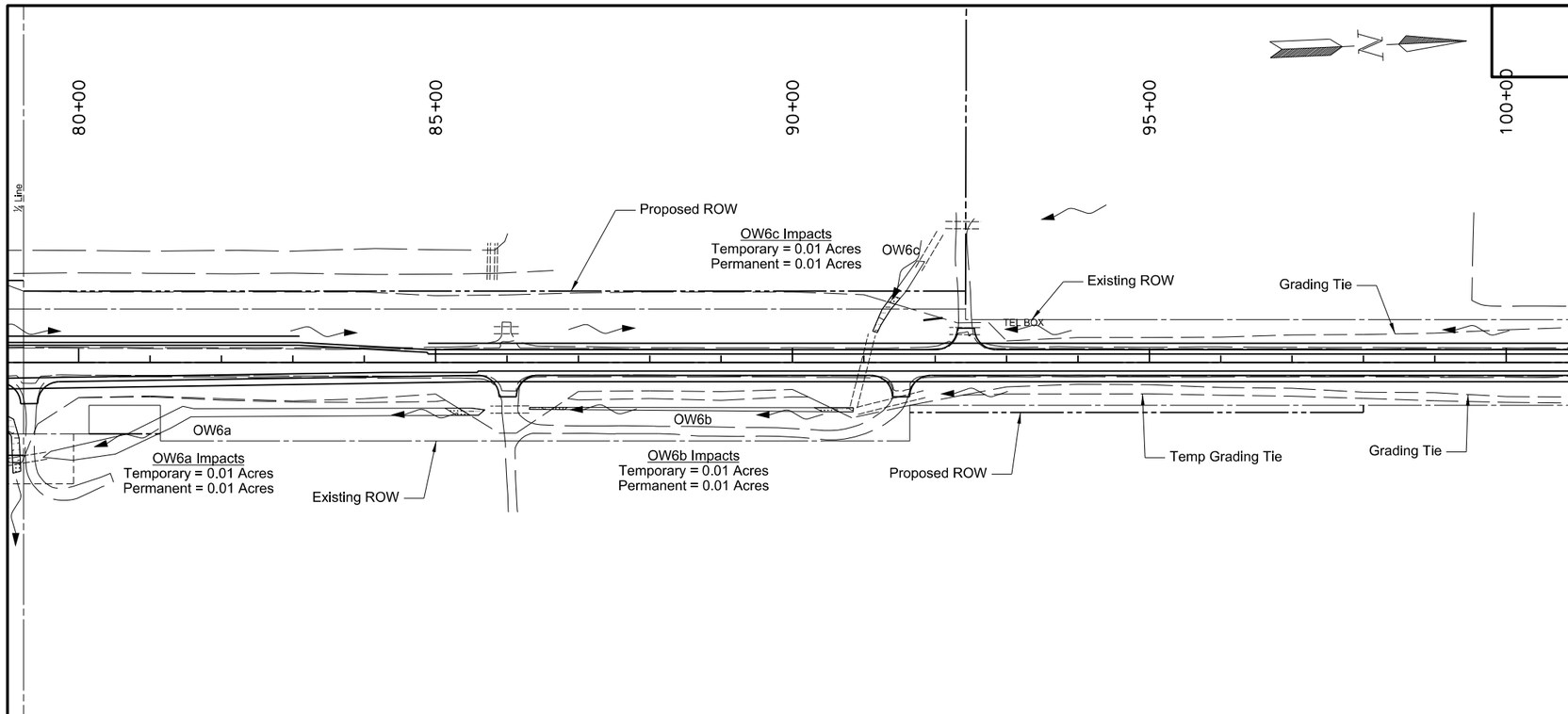

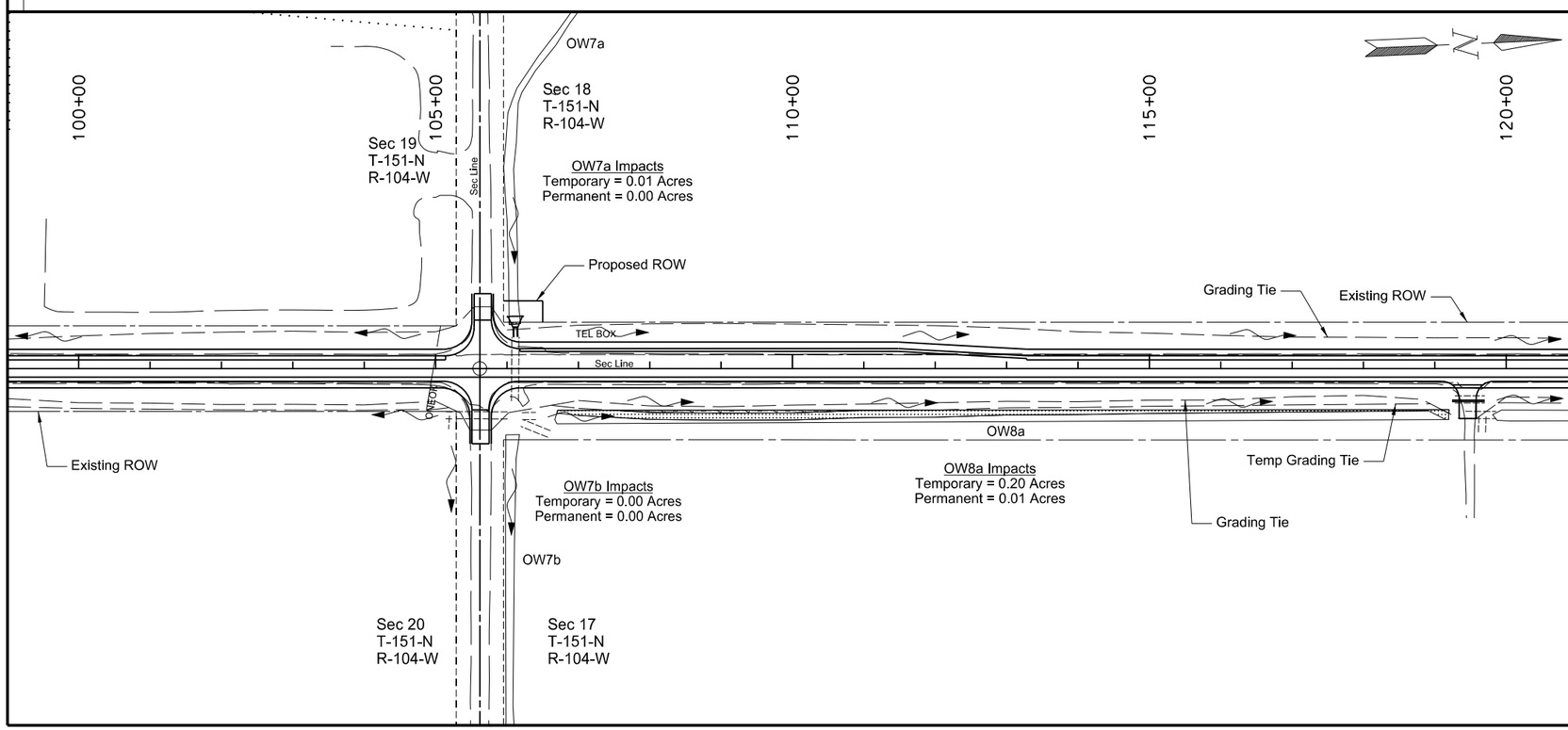

Other Water Permanent Impacts

Other Water Temporary Impacts

Permanent Wetland Impact

Temporary Wetland Impact

Wetland Mitigation

This document was originally issued and sealed by William Doerr, Registration Number PE- 7113, on 12/04/15 and the original document is stored at the North Dakota Department of Transportation

Wetland, Mitigation & Environmental

ND 58

Jct 200 to Jct 1804

STATE	PROJECT NO.	SECTION NO.	SHEET NO.
ND	SOIB-7-058(013)000	75	10

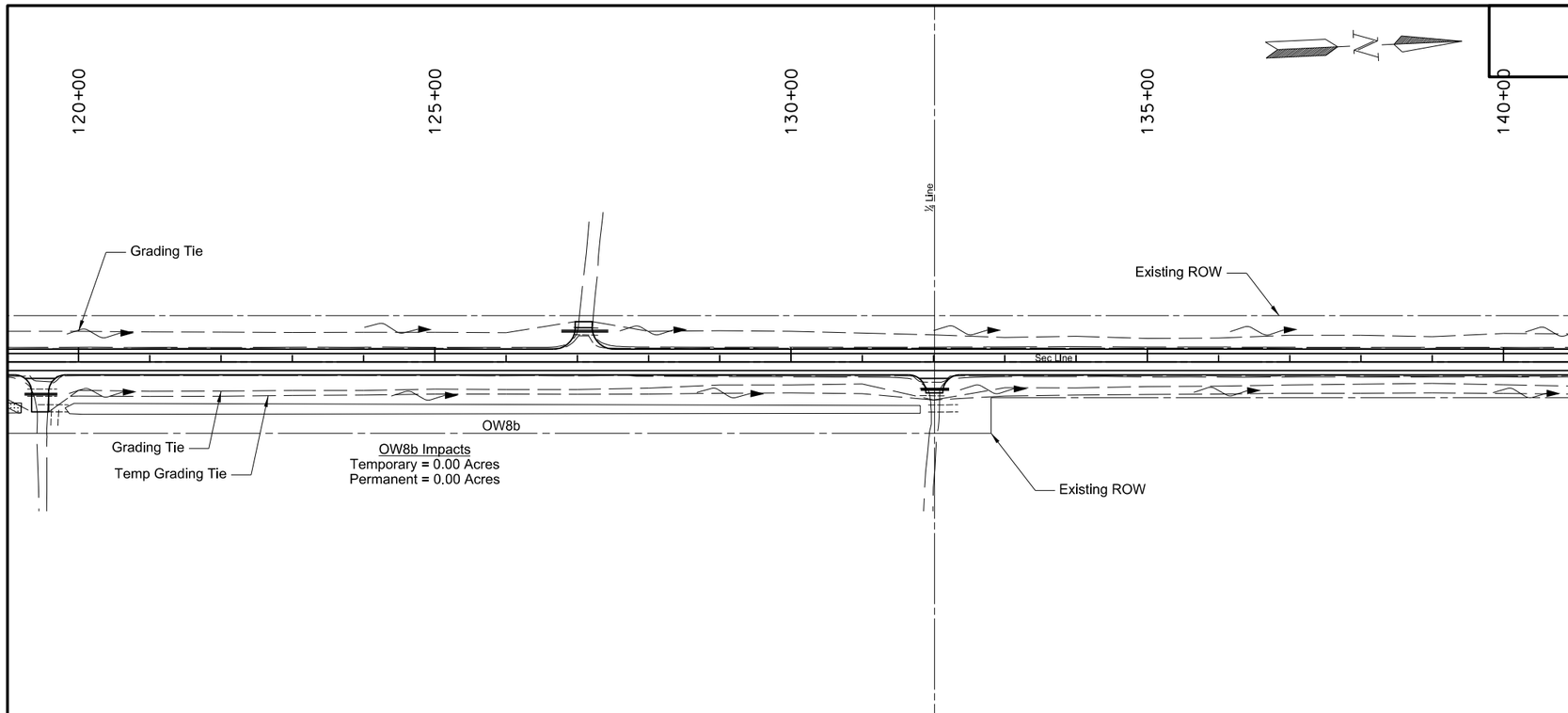

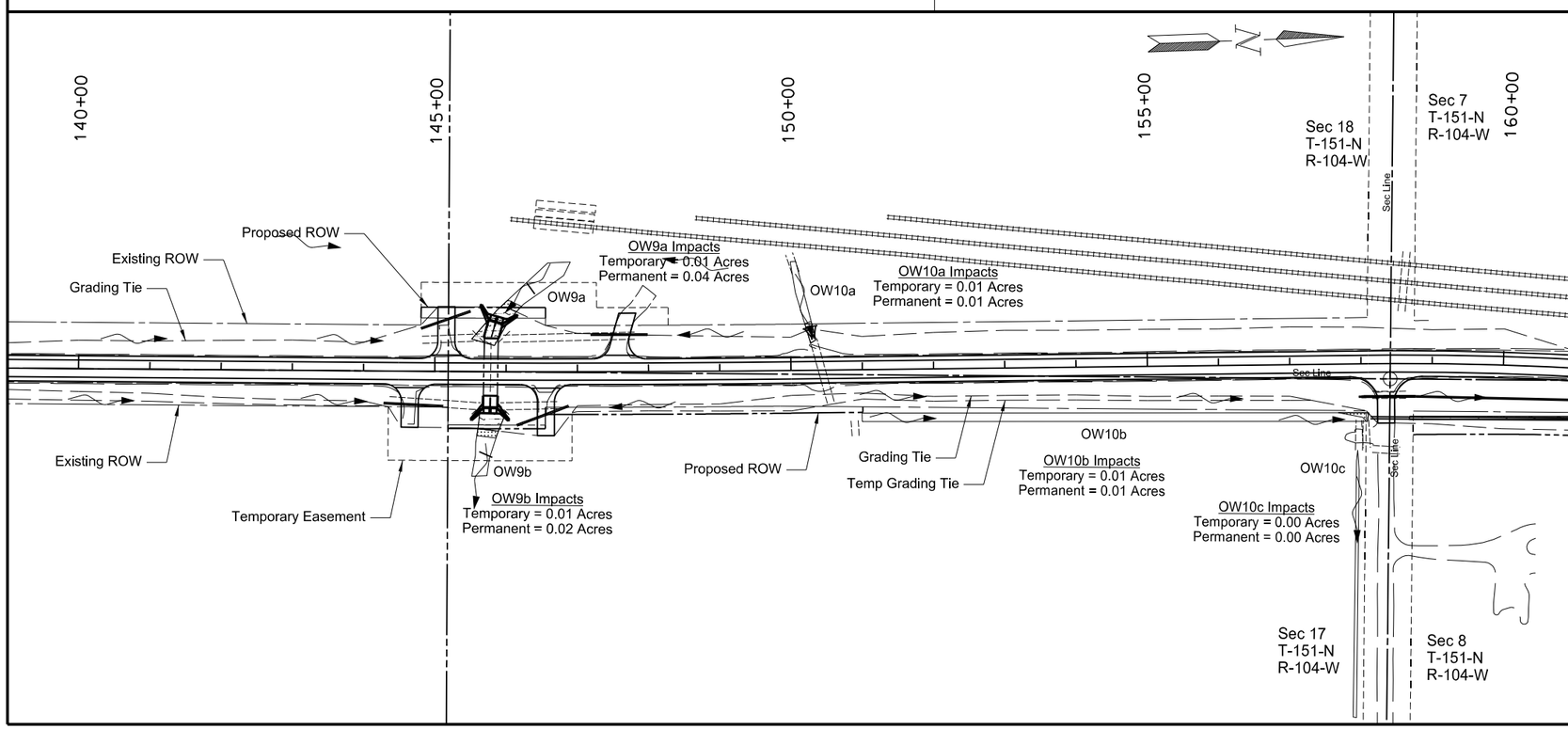

Other Water Permanent Impacts

Other Water Temporary Impacts

Permanent Wetland Impact

Temporary Wetland Impact

Wetland Mitigation

This document was originally issued and sealed by William Doerr, Registration Number PE- 7113, on 12/04/15 and the original document is stored at the North Dakota Department of Transportation

Wetland, Mitigation & Environmental

ND 58

Jct 200 to Jct 1804

STATE	PROJECT NO.	SECTION NO.	SHEET NO.
ND	SOIB-7-058(013)000	75	11

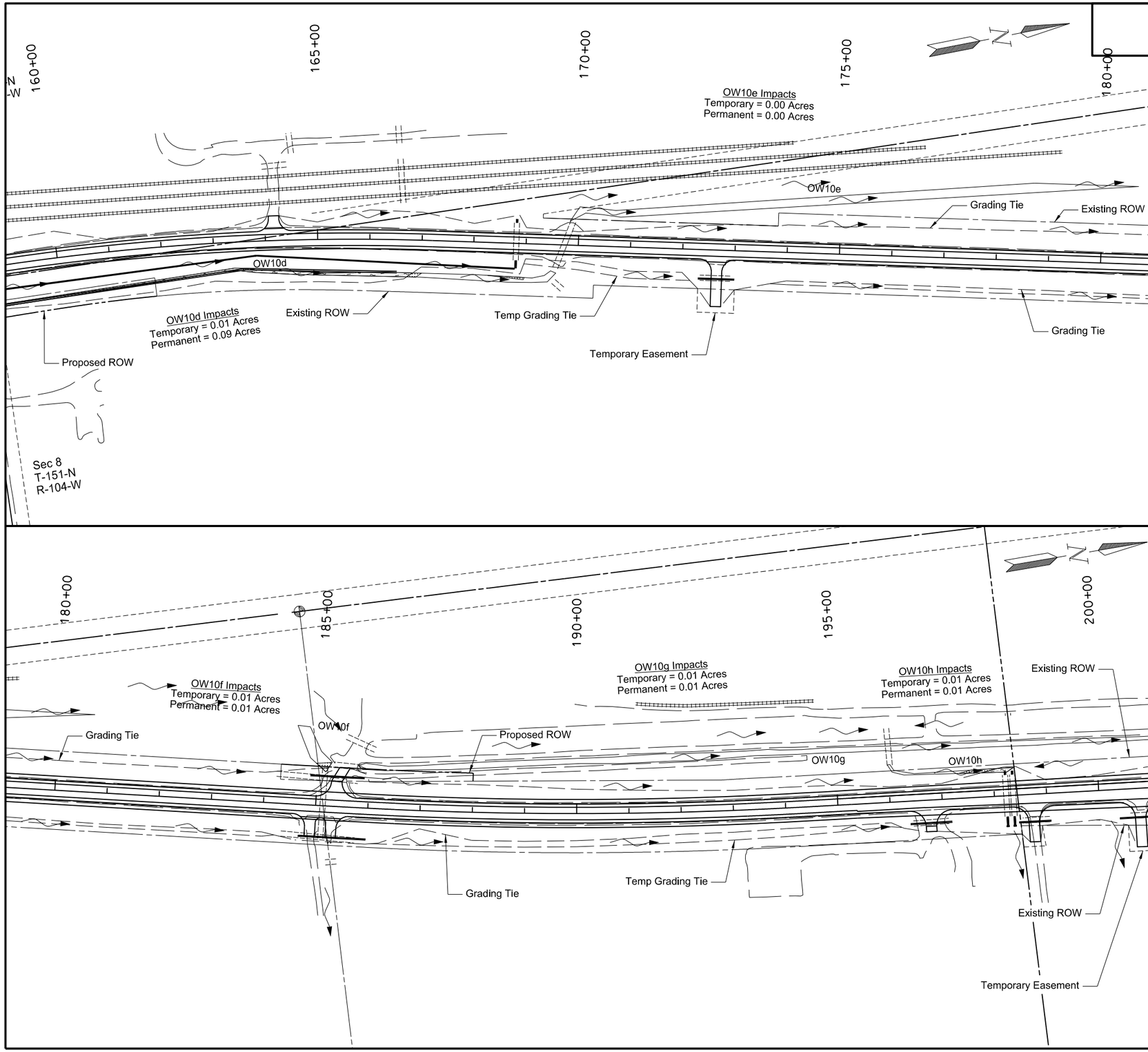

Other Water Permanent Impacts

Other Water Temporary Impacts

Permanent Wetland Impact

Temporary Wetland Impact

Wetland Mitigation

This document was originally issued and sealed by William Doerr, Registration Number PE- 7113, on 12/04/15 and the original document is stored at the North Dakota Department of Transportation

Wetland, Mitigation & Environmental

ND 58

Jct 200 to Jct 1804

STATE	PROJECT NO.	SECTION NO.	SHEET NO.
ND	SOIB-7-058(013)000	75	12

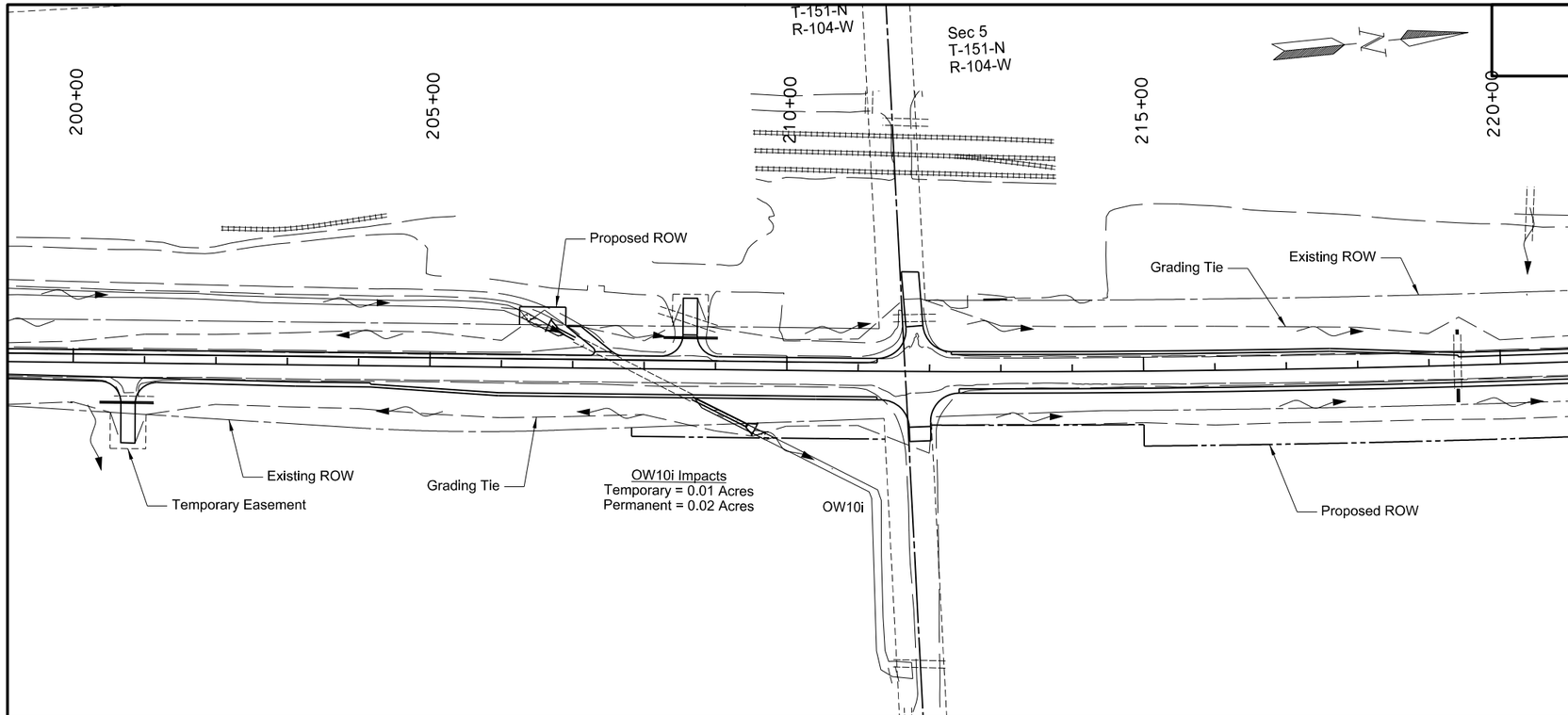

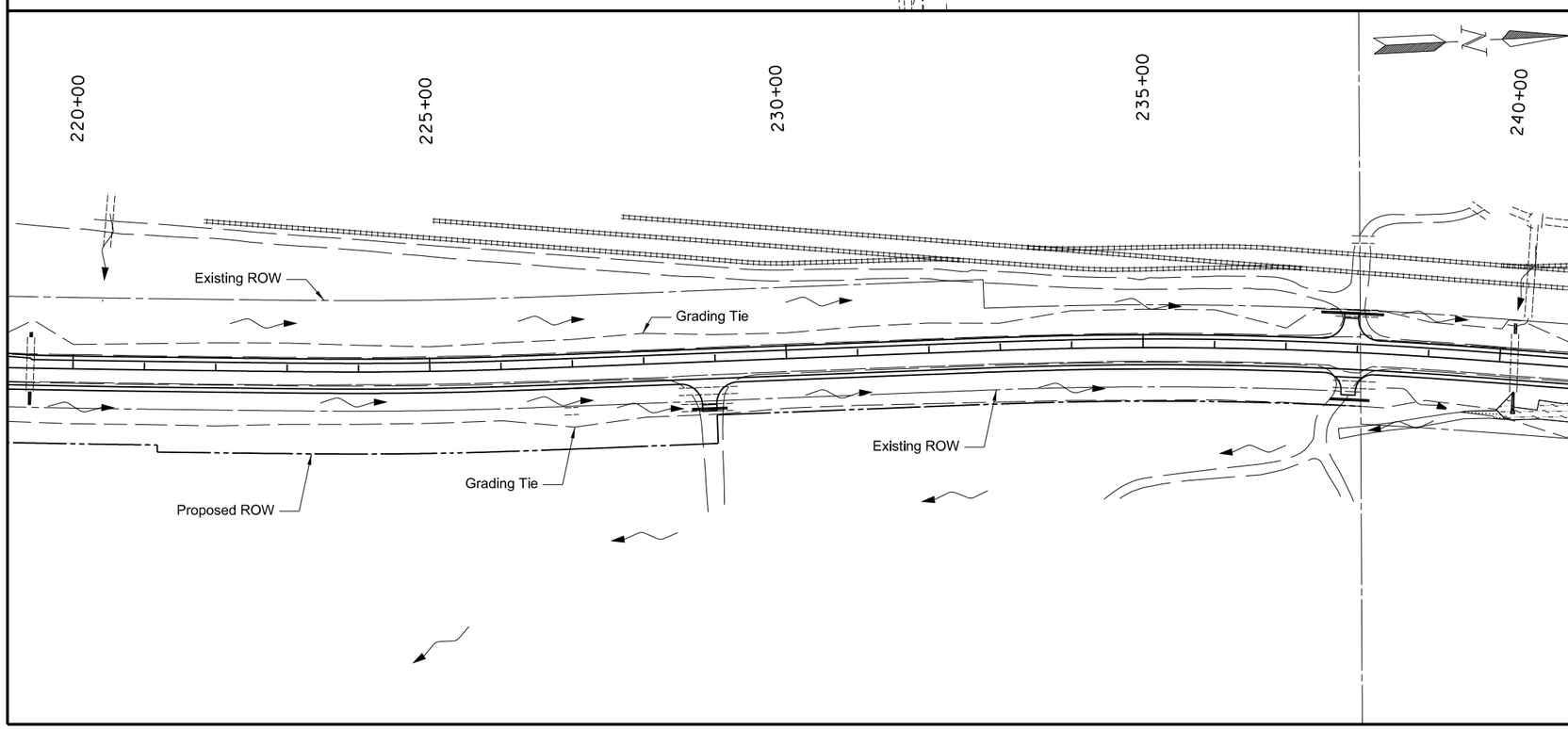

Other Water Permanent Impacts

Other Water Temporary Impacts

Permanent Wetland Impact

Temporary Wetland Impact

Wetland Mitigation

This document was originally issued and sealed by William Doerr, Registration Number PE- 7113, on 12/04/15 and the original document is stored at the North Dakota Department of Transportation

Wetland, Mitigation & Environmental

ND 58

Jct 200 to Jct 1804

STATE	PROJECT NO.	SECTION NO.	SHEET NO.
ND	SOIB-7-058(013)000	75	13

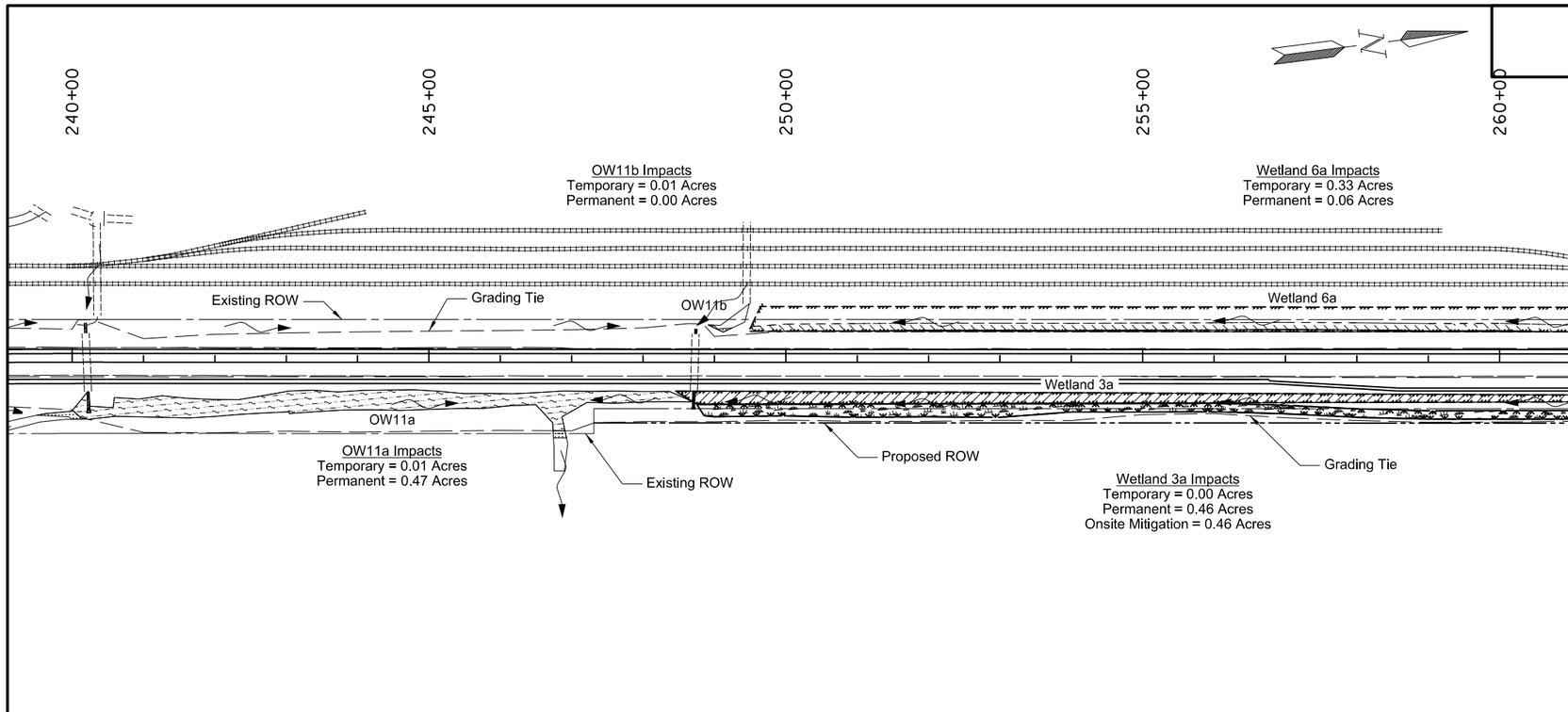

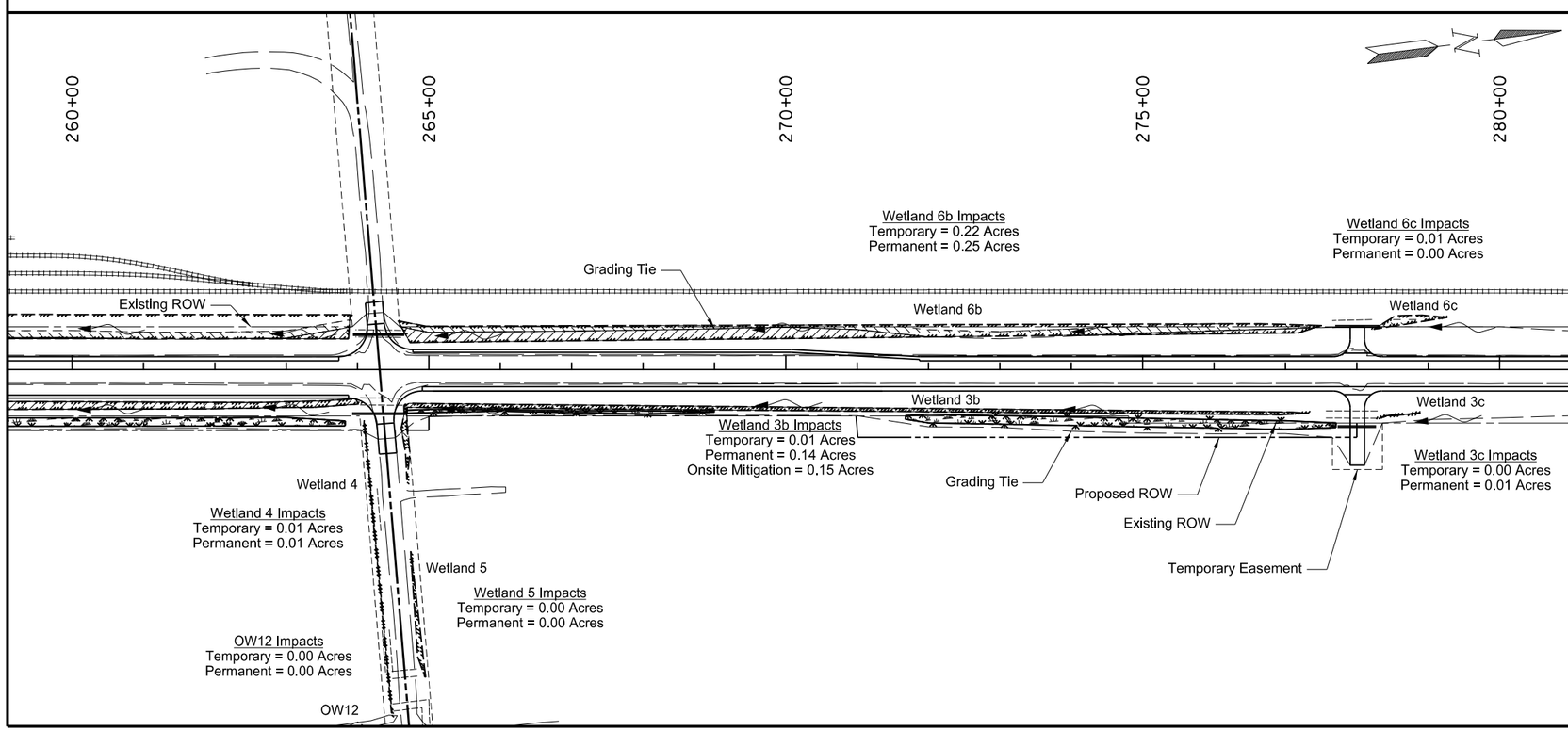

Other Water Permanent Impacts

Other Water Temporary Impacts

Permanent Wetland Impact

Temporary Wetland Impact

Wetland Mitigation

This document was originally issued and sealed by William Doerr, Registration Number PE- 7113, on 12/04/15 and the original document is stored at the North Dakota Department of Transportation

Wetland, Mitigation & Environmental

ND 58

Jct 200 to Jct 1804

STATE	PROJECT NO.	SECTION NO.	SHEET NO.
ND	SOIB-7-058(013)000	75	14

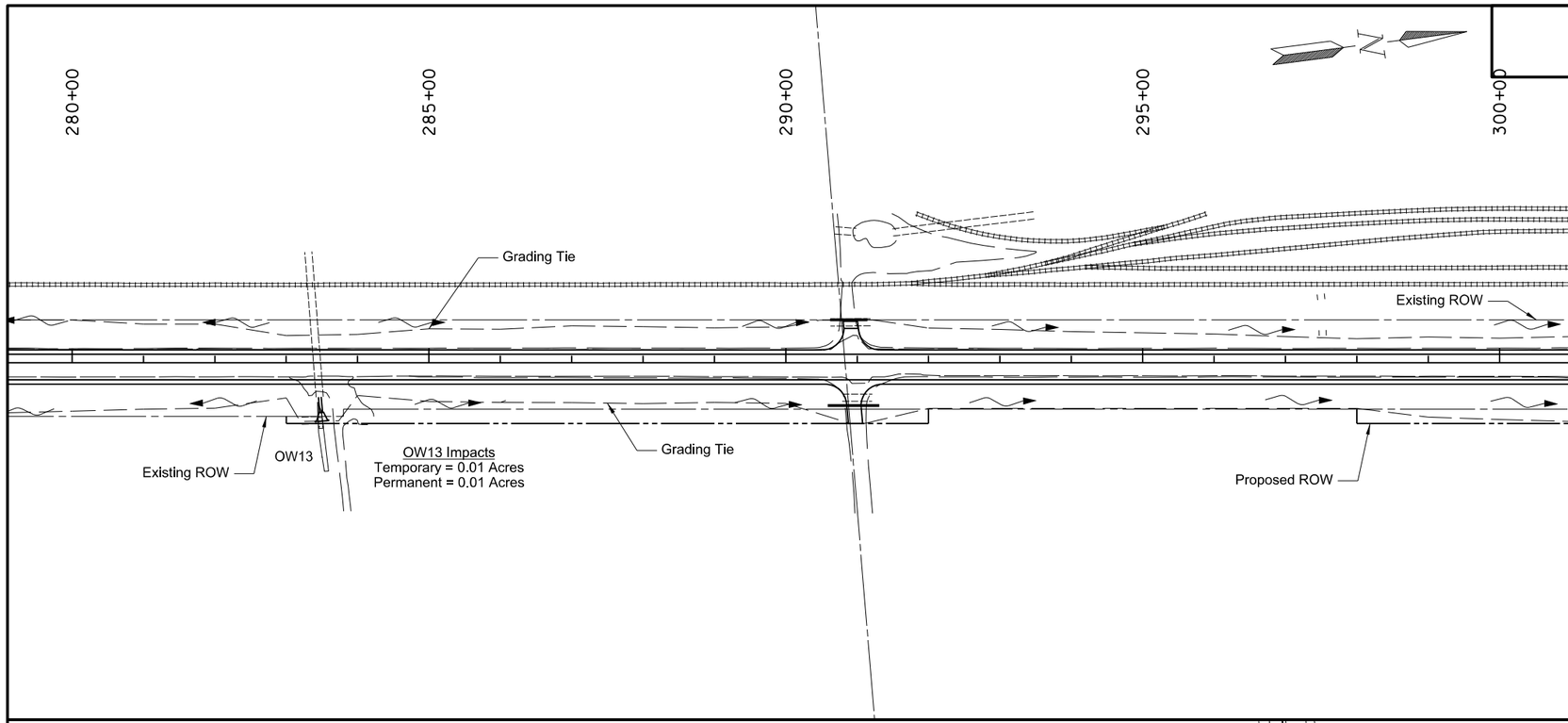

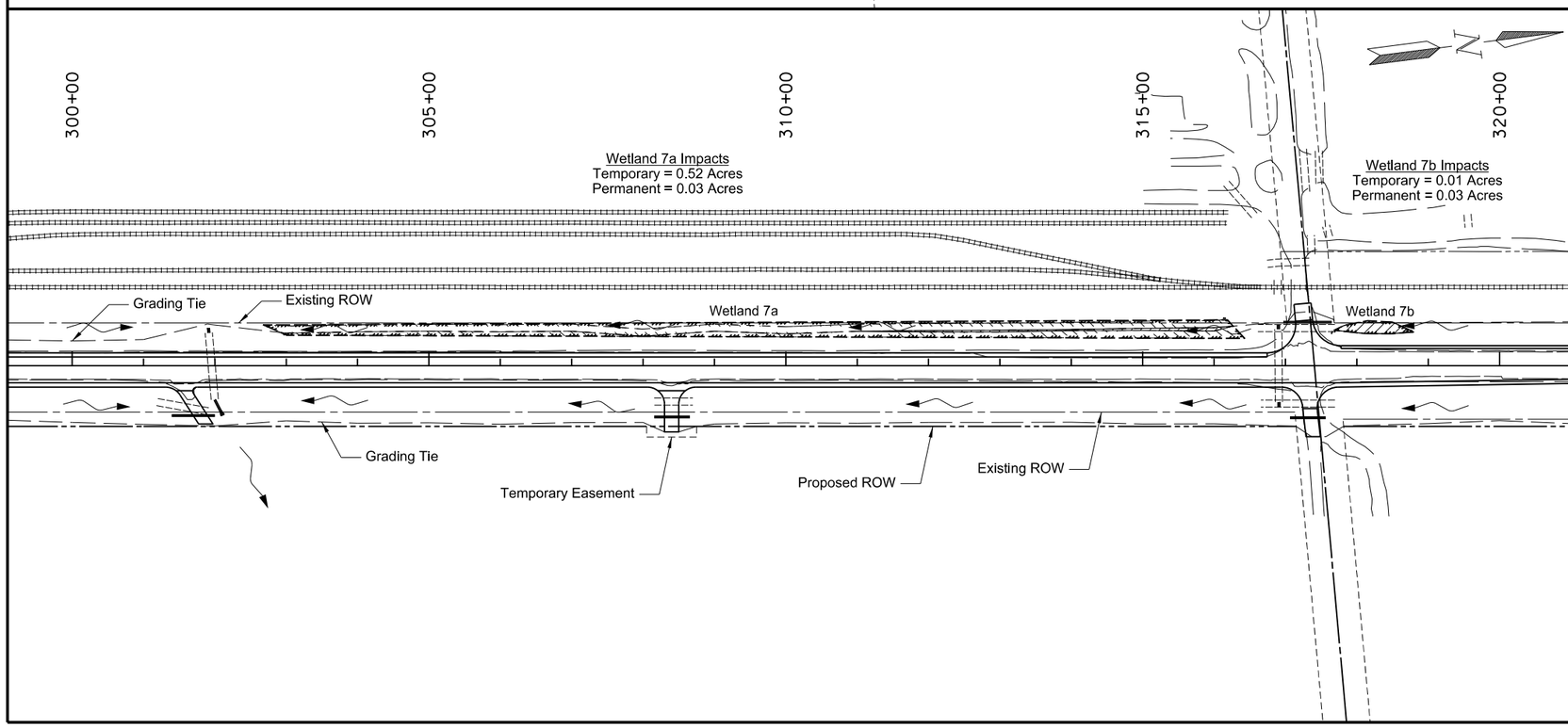

Other Water Permanent Impacts

Other Water Temporary Impacts

Permanent Wetland Impact

Temporary Wetland Impact

Wetland Mitigation

This document was originally issued and sealed by William Doerr, Registration Number PE- 7113, on 12/04/15 and the original document is stored at the North Dakota Department of Transportation

Wetland, Mitigation & Environmental

ND 58

Jct 200 to Jct 1804

STATE	PROJECT NO.	SECTION NO.	SHEET NO.
ND	SOIB-7-058(013)000	75	15

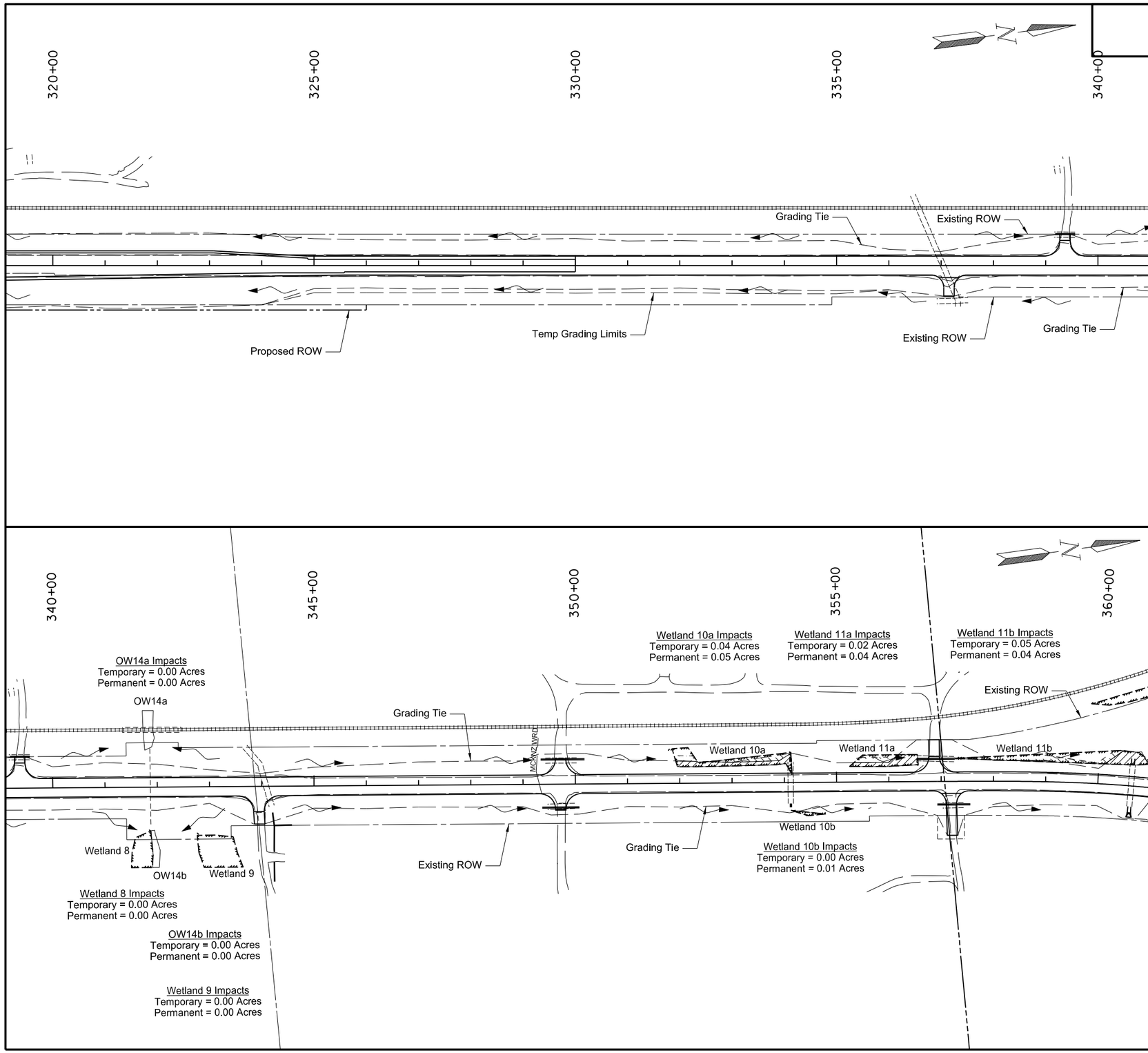

Other Water Permanent Impacts

Other Water Temporary Impacts

Permanent Wetland Impact

Temporary Wetland Impact

Wetland Mitigation

This document was originally issued and sealed by William Doerr, Registration Number PE- 7113, on 12/04/15 and the original document is stored at the North Dakota Department of Transportation

Wetland, Mitigation & Environmental

ND 58

Jct 200 to Jct 1804

STATE	PROJECT NO.	SECTION NO.	SHEET NO.
ND	SOIB-7-058(013)000	75	16

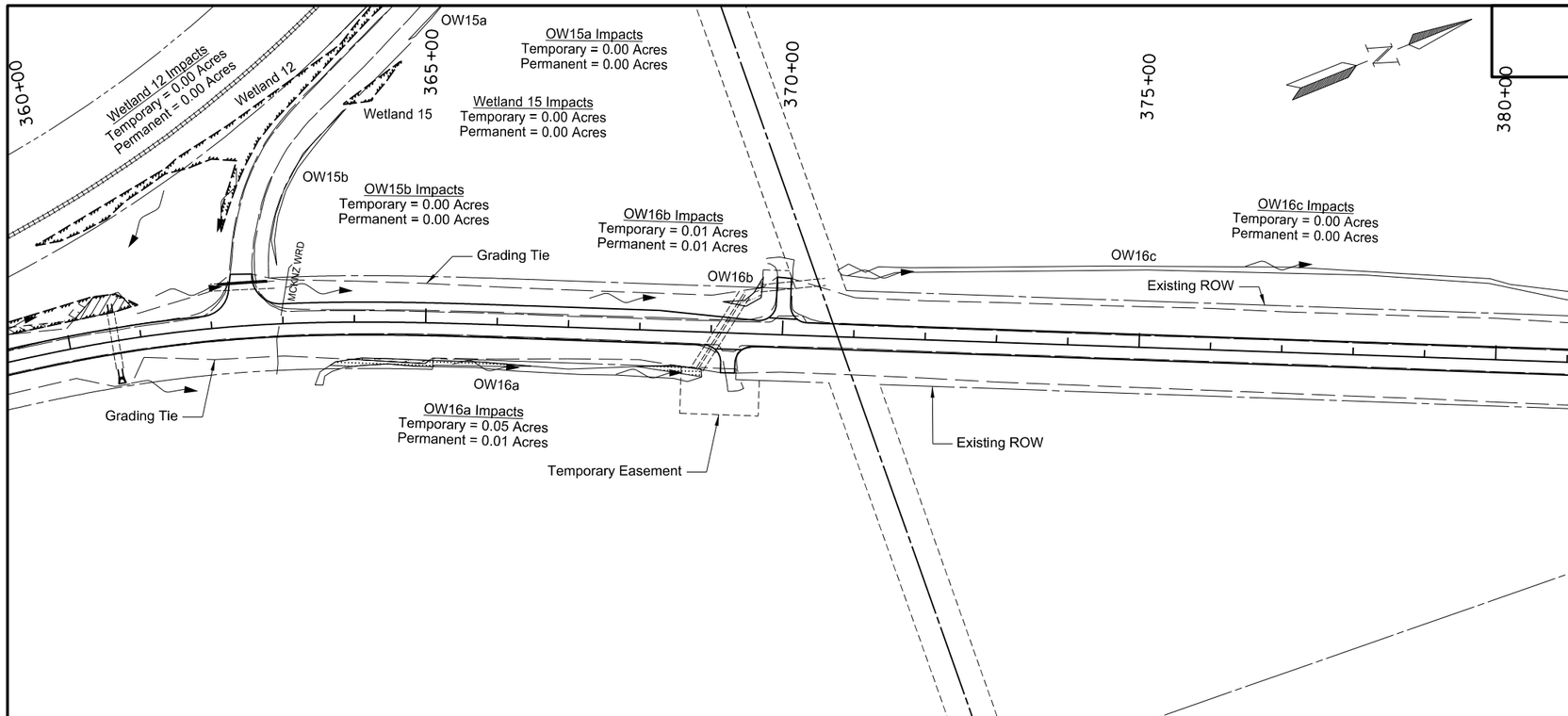

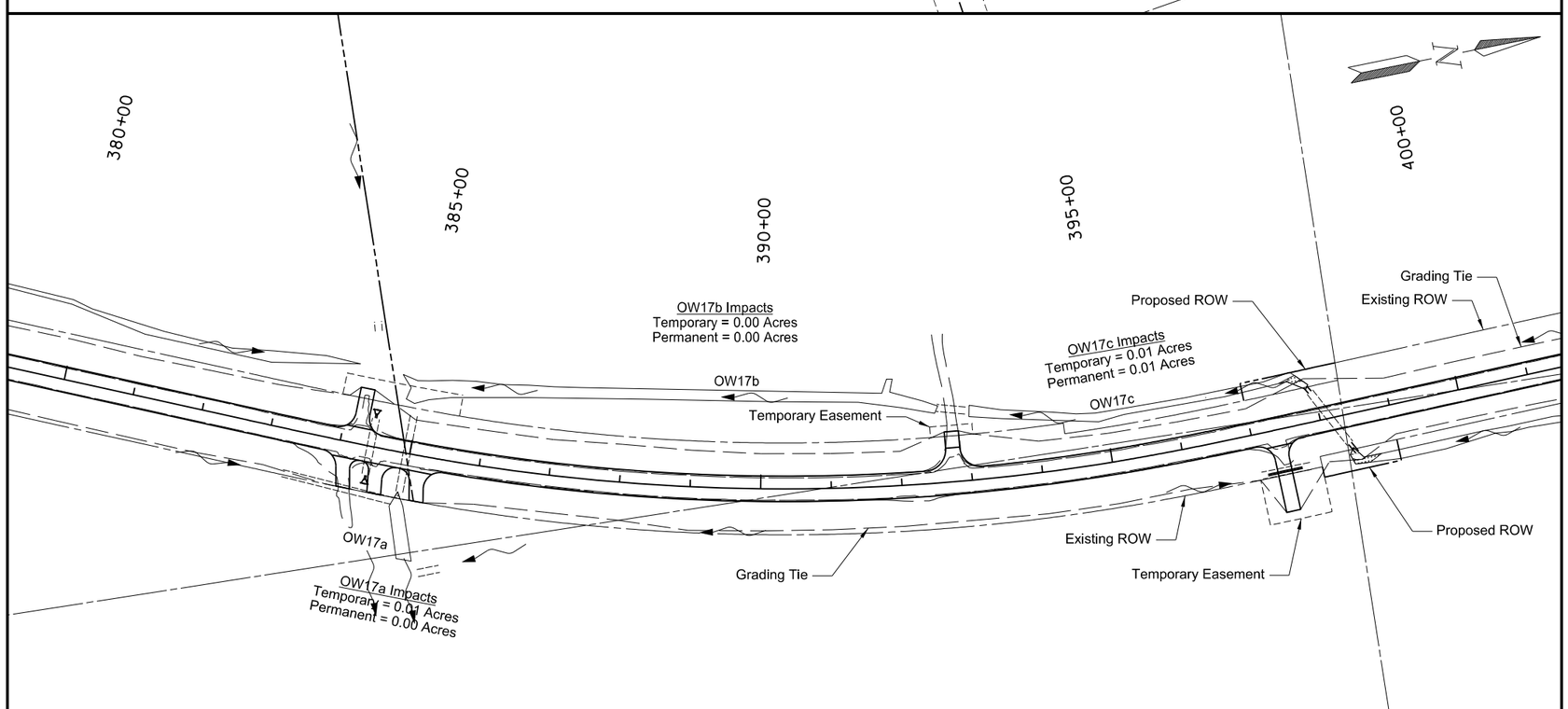

Other Water Permanent Impacts

Other Water Temporary Impacts

Permanent Wetland Impact

Temporary Wetland Impact

Wetland Mitigation

This document was originally issued and sealed by William Doerr, Registration Number PE- 7113, on 12/04/15 and the original document is stored at the North Dakota Department of Transportation

Wetland, Mitigation & Environmental

ND 58

Jct 200 to Jct 1804

STATE	PROJECT NO.	SECTION NO.	SHEET NO.
ND	SOIB-7-058(013)000	75	17

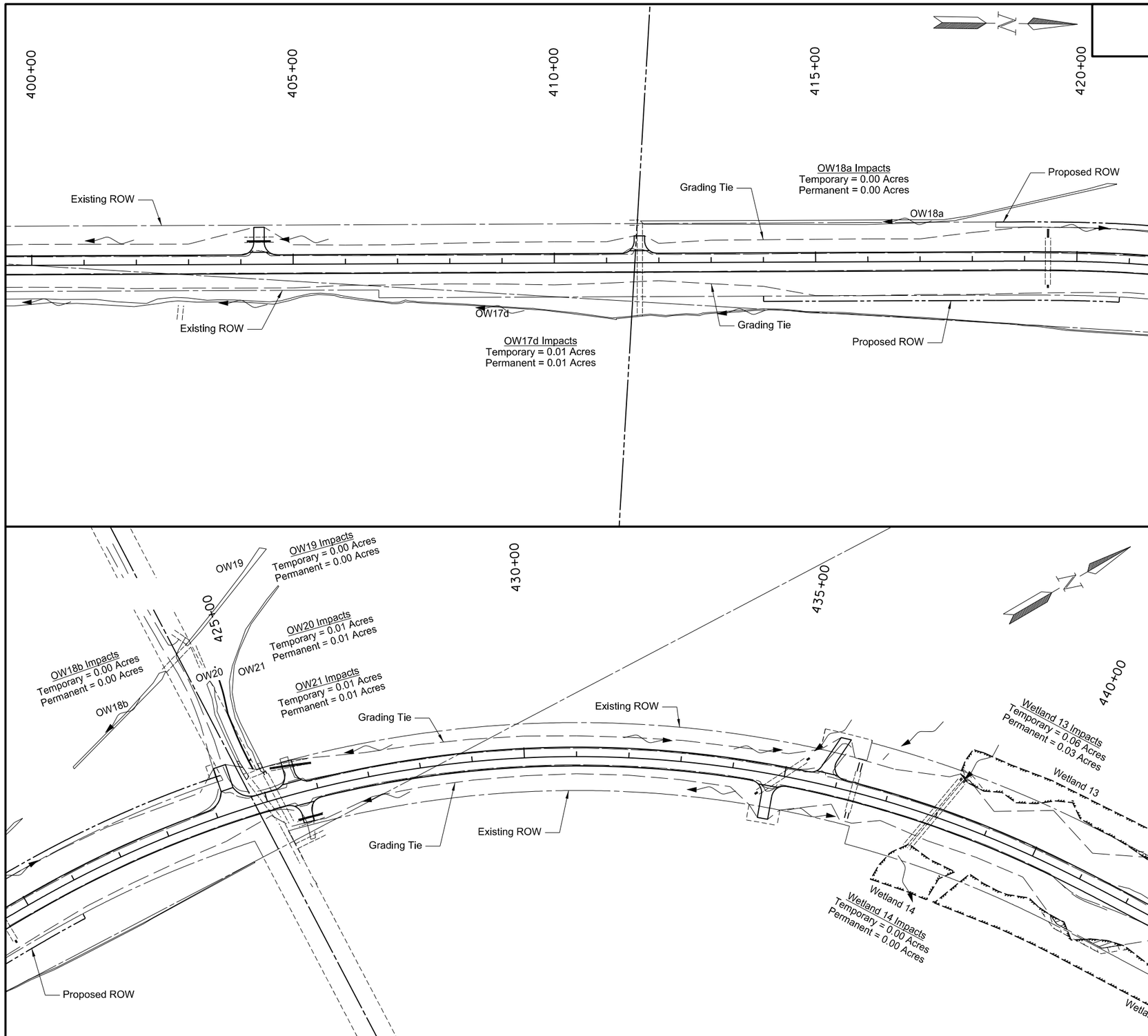

Other Water Permanent Impacts

Other Water Temporary Impacts

Permanent Wetland Impact

Temporary Wetland Impact

Wetland Mitigation

This document was originally issued and sealed by William Doerr, Registration Number PE- 7113, on 12/04/15 and the original document is stored at the North Dakota Department of Transportation

Wetland, Mitigation & Environmental

ND 58

Jct 200 to Jct 1804

STATE	PROJECT NO.	SECTION NO.	SHEET NO.
ND	SOIB-7-058(013)000	75	18

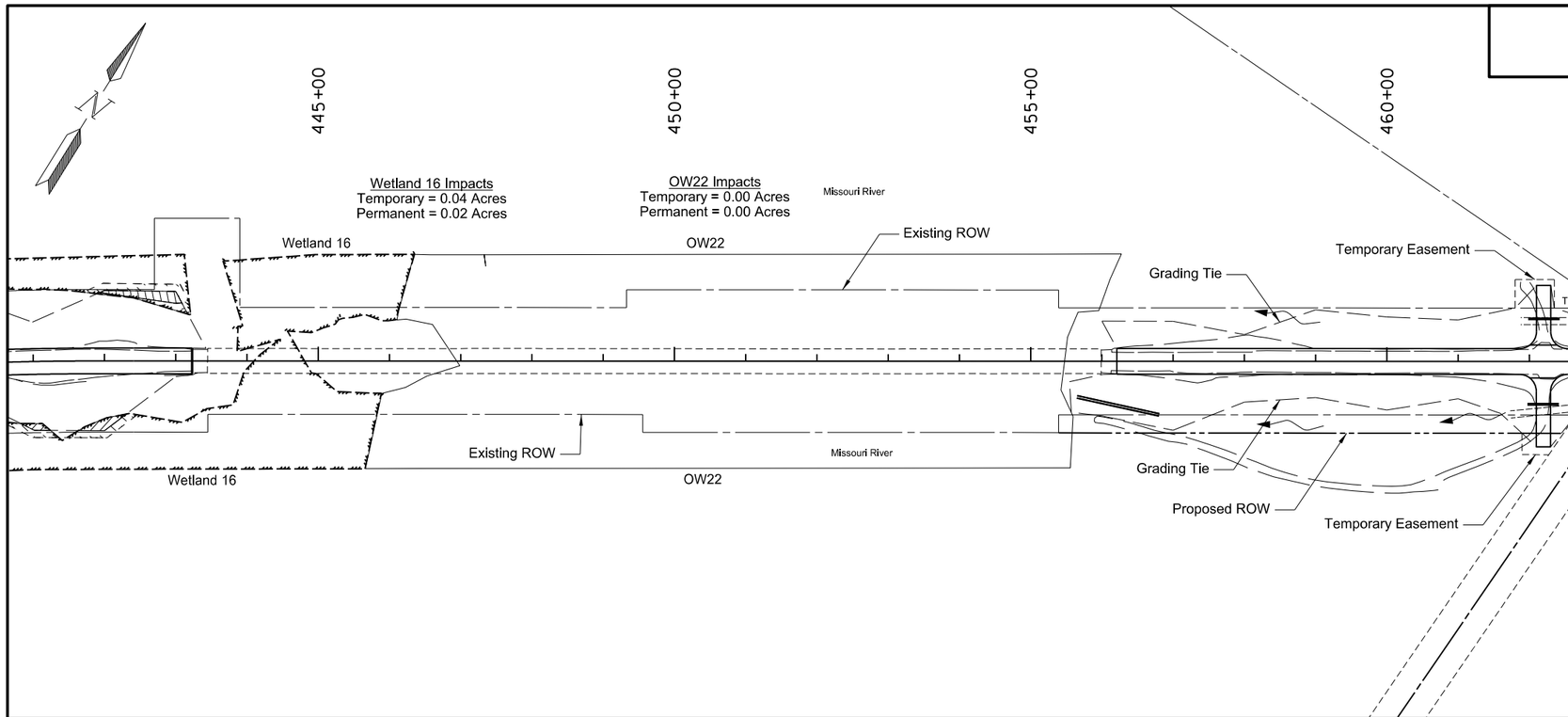

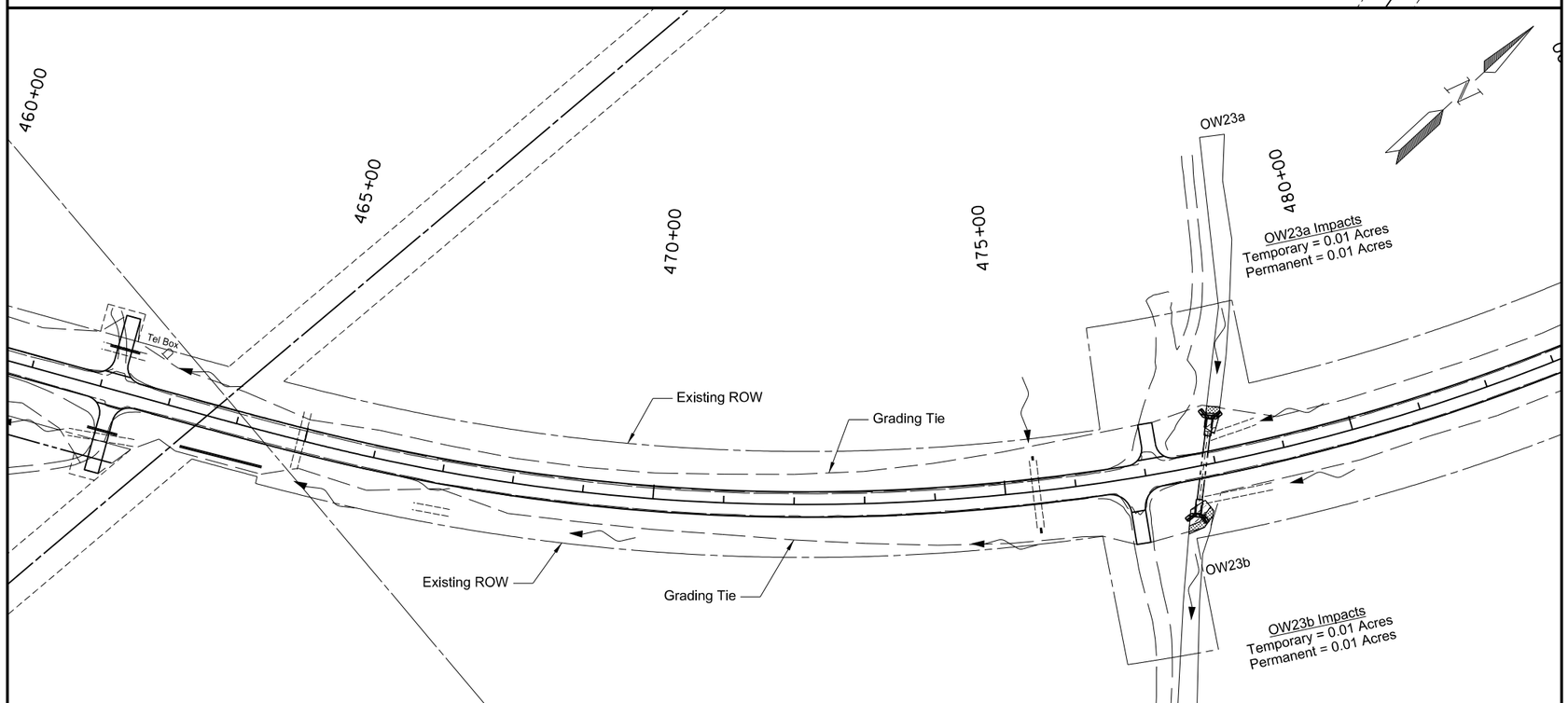

- Other Water Permanent Impacts
- Other Water Temporary Impacts
- Permanent Wetland Impact
- Temporary Wetland Impact
- Wetland Mitigation

This document was originally issued and sealed by William Doerr, Registration Number PE- 7113, on 12/04/15 and the original document is stored at the North Dakota Department of Transportation

Wetland, Mitigation & Environmental

ND 58

Jct 200 to Jct 1804

STATE	PROJECT NO.	SECTION NO.	SHEET NO.
ND	SOIB-7-058(013)000	75	19

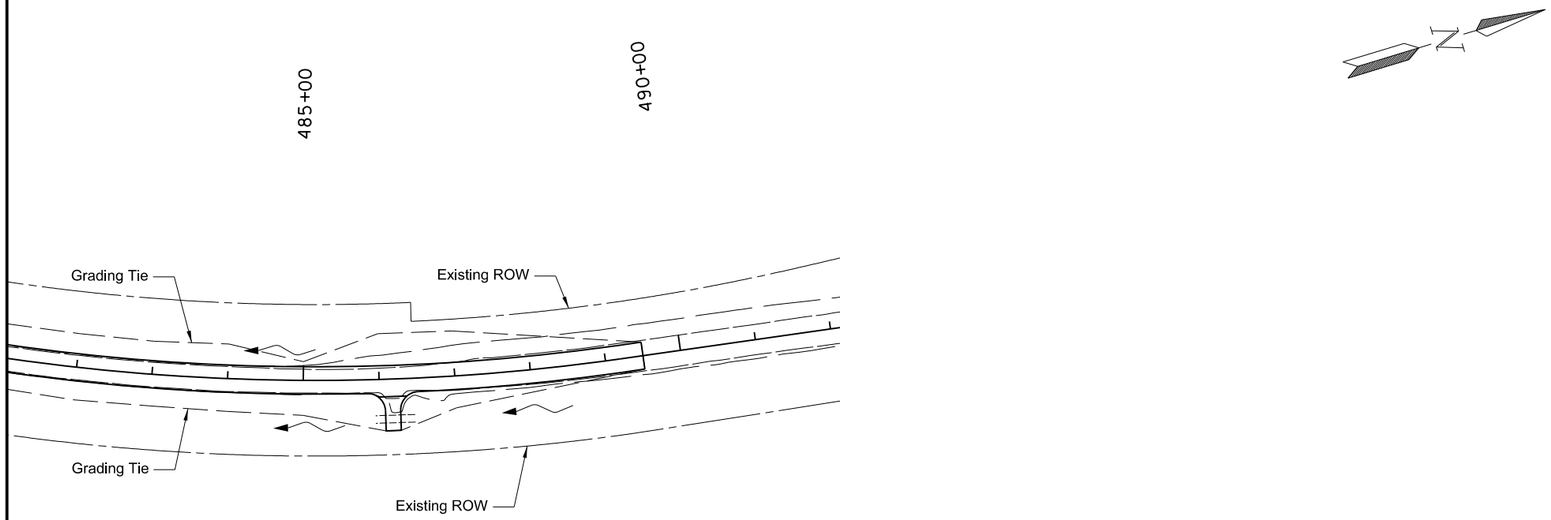

Other Water Permanent Impacts

Other Water Temporary Impacts

Permanent Wetland Impact

Temporary Wetland Impact

Wetland Mitigation

This document was originally issued and sealed by William Doerr, Registration Number PE- 7113, on 12/04/15 and the original document is stored at the North Dakota Department of Transportation

Wetland, Mitigation & Environmental

ND 58

Jct 200 to Jct 1804

STATE	PROJECT NO.	SECTION NO.	SHEET NO.
ND	SOIB-7-058(013)000	76	1

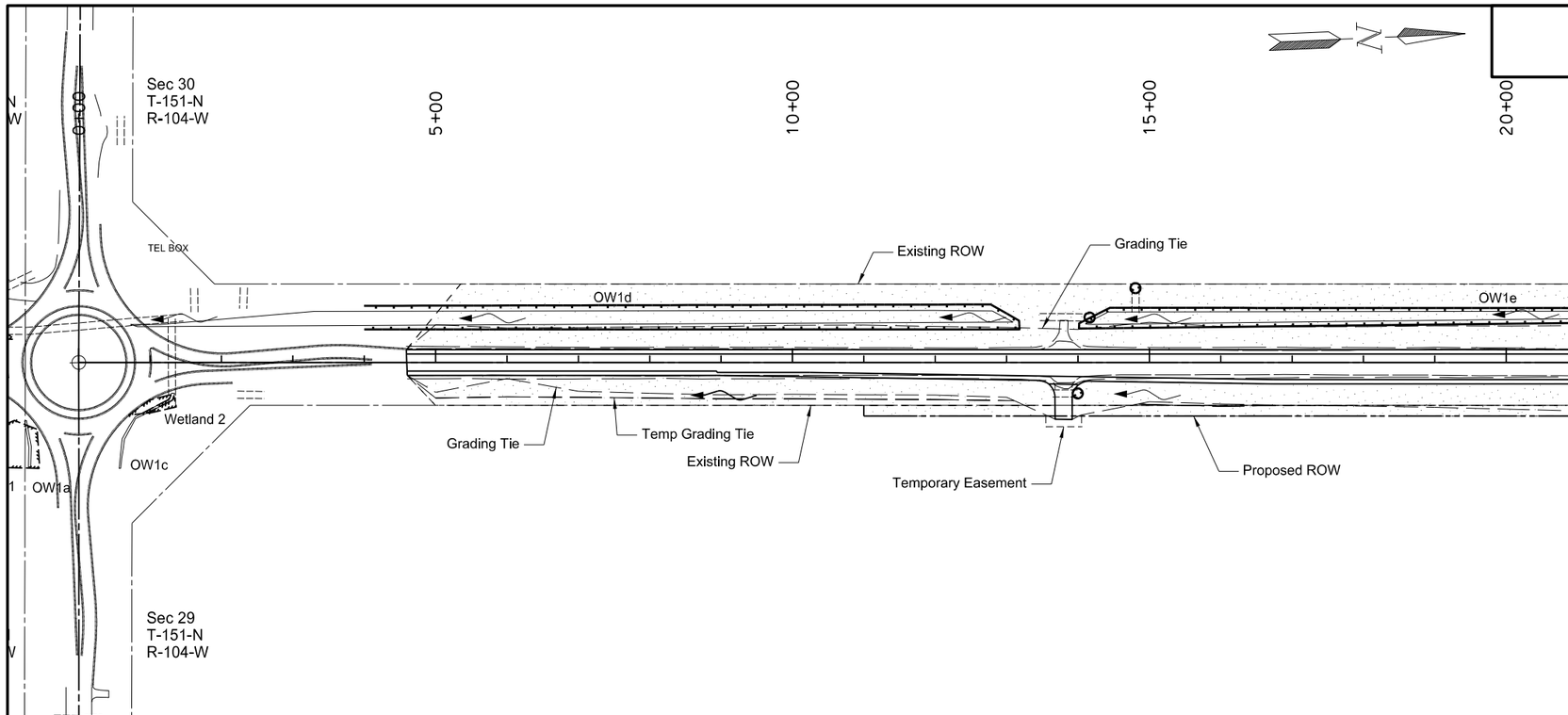

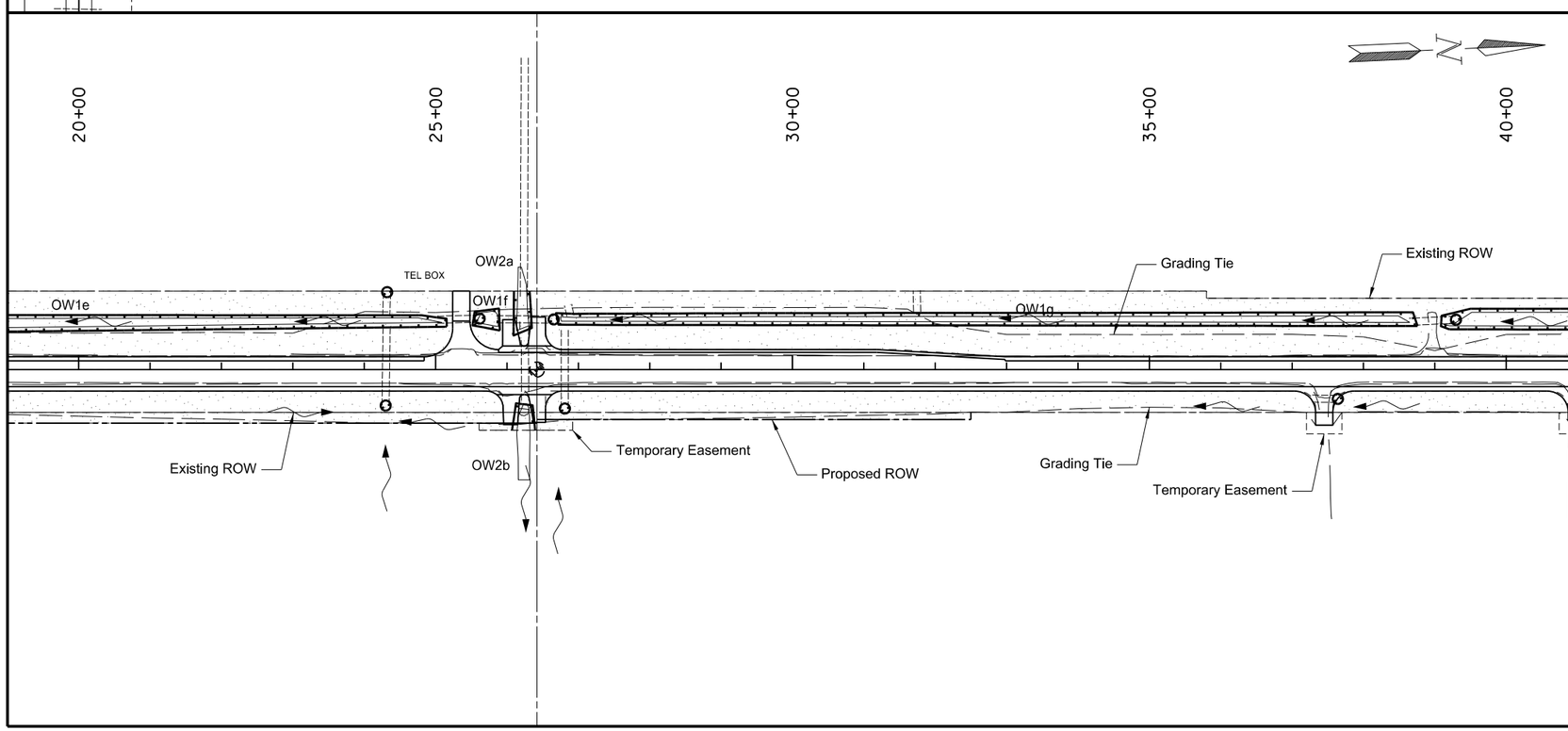

SPEC	CODE	BID ITEM	QUANTITY	UNIT
261	0112	FIBER ROLLS 12IN		
		4+00 LT to 13+18 LT (Wetland Area)	1855	LF
		14+00 LT to 25+16 LT (Wetland Area)	2250	LF
		14+00 RT (Culvert Inlet)	30	LF
		14+16 LT (Culvert Inlet)	30	LF
		14+80 LT (Culvert Inlet)	30	LF
		24+32 LT (Culvert Inlet)	30	LF
		24+32 RT (Culvert Inlet)	30	LF
		25+52 LT to 25+90 LT (Wetland Area)	125	LF
		25+65 LT (Culvert Inlet)	30	LF
		26+09 LT to 26+35 LT (Wetland Area)	140	LF
		26+13 RT to 26+36 RT (Wetland Area)	95	LF
		26+65 LT (Culvert Inlet)	30	LF
		26+70 LT to 38+76 LT (Wetland Area)	2440	LF
		26+81 RT (Culvert Inlet)	30	LF
		37+67 RT (Culvert Inlet)	30	LF
261	0113	REMOVE FIBER ROLLS 12IN		
		4+00 LT to 13+18 LT (Wetland Area)	1855	LF
		14+00 LT to 25+16 LT (Wetland Area)	2250	LF
		14+00 RT (Culvert Inlet)	30	LF
		14+16 LT (Culvert Inlet)	30	LF
		14+80 LT (Culvert Inlet)	30	LF
		24+32 LT (Culvert Inlet)	30	LF
		24+32 RT (Culvert Inlet)	30	LF
		25+52 LT to 25+90 LT (Wetland Area)	125	LF
		25+65 LT (Culvert Inlet)	30	LF
		26+09 LT to 26+35 LT (Wetland Area)	140	LF
		26+13 RT to 26+36 RT (Wetland Area)	95	LF
		26+65 LT (Culvert Inlet)	30	LF
		26+70 LT to 38+76 LT (Wetland Area)	2440	LF
		26+81 RT (Culvert Inlet)	30	LF
		37+67 RT (Culvert Inlet)	30	LF

Fiber Rolls

Supported Silt Fence

Temporary Seeding & Temporary Mulch

Wetland Mitigation

This document was originally issued and sealed by William Doerr, Registration Number PE- 7113, on 12/04/15 and the original document is stored at the North Dakota Department of Transportation

Temporary Sediment & Erosion Control

ND 58

Jct 200 to Jct 1804

STATE	PROJECT NO.	SECTION NO.	SHEET NO.
ND	SOIB-7-058(013)000	76	2

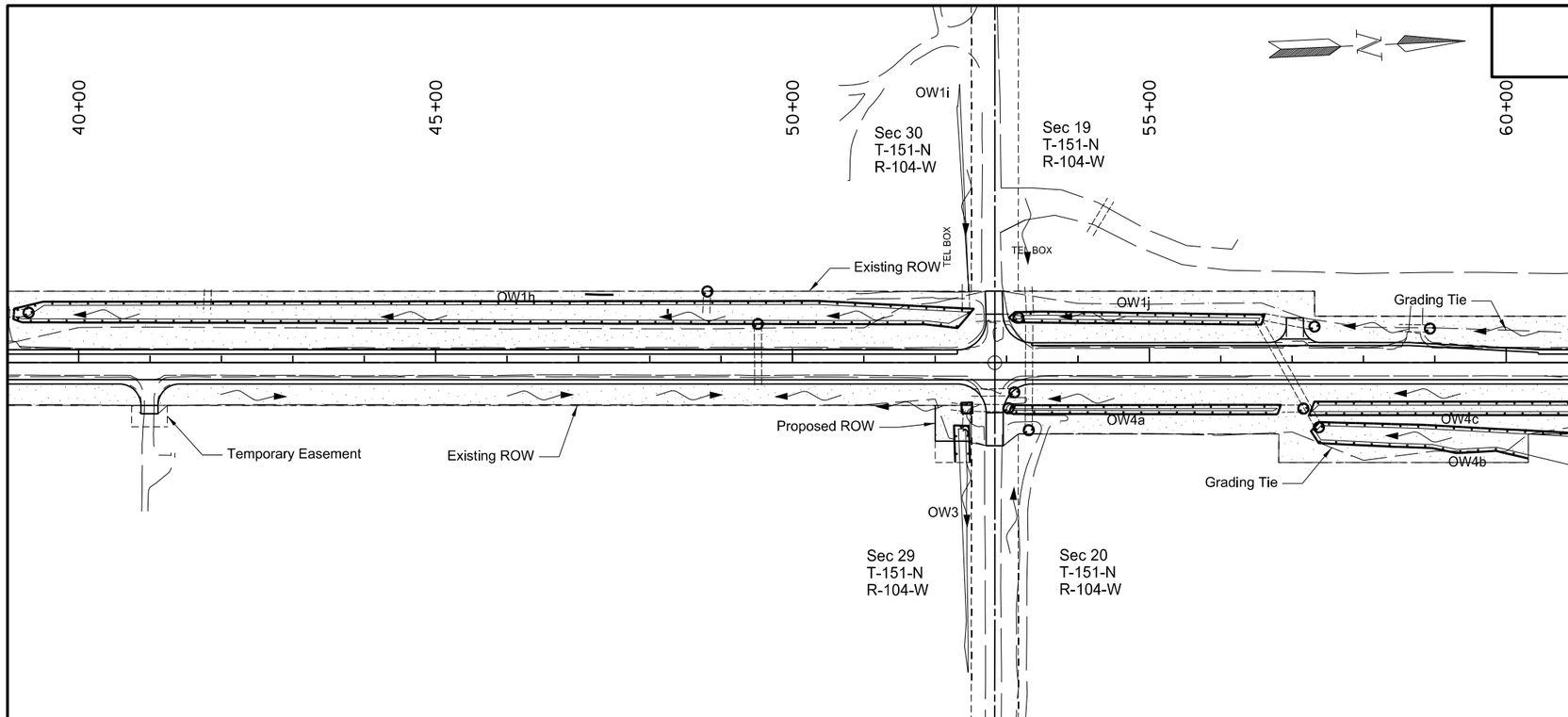

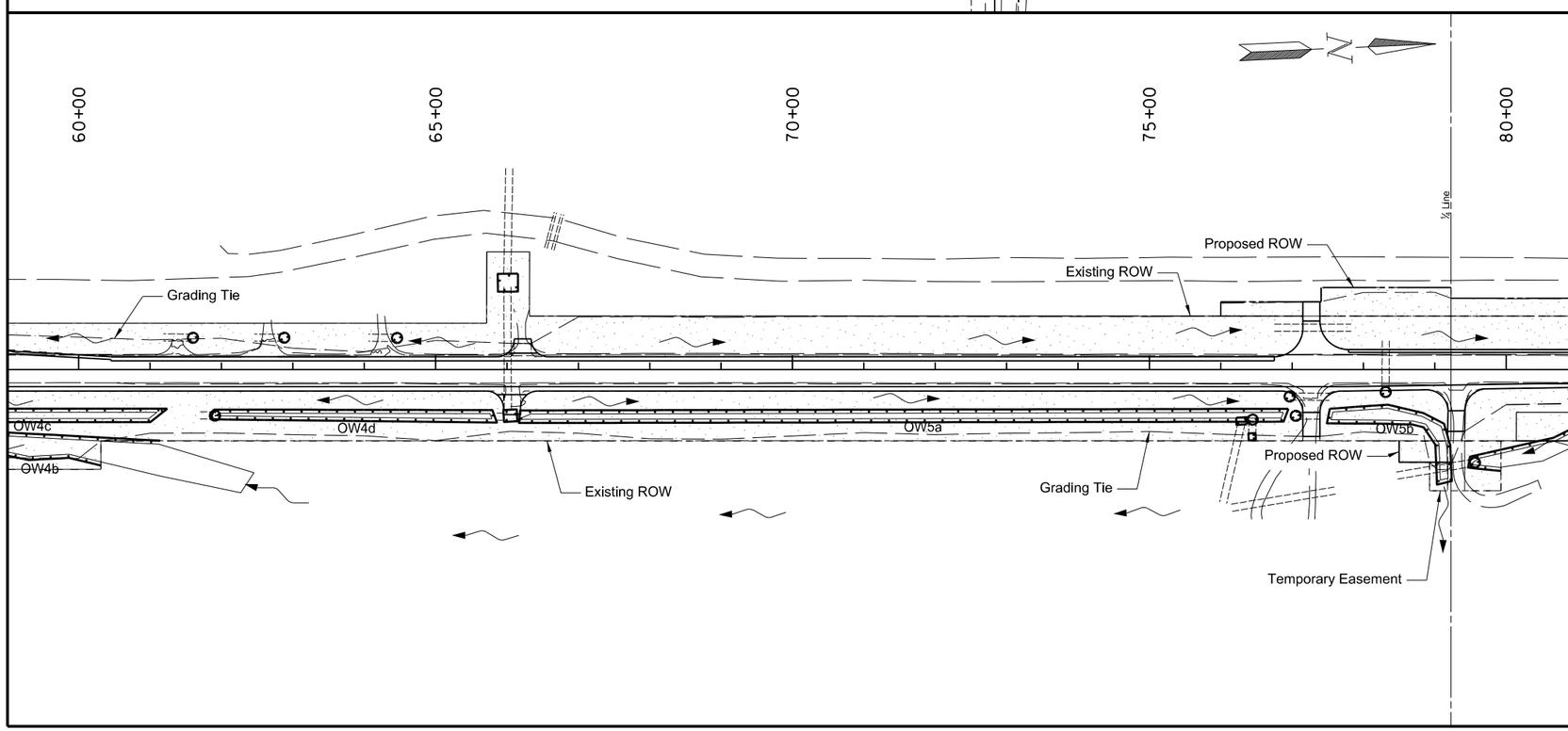

SPEC	CODE	BID ITEM	QUANTITY	UNIT
261	0112	FIBER ROLLS 12IN		
		39+09 LT to 52+54 LT (Wetland Area)	2720	LF
		39+30 LT (Culvert Inlet)	30	LF
		48+81 LT (Culvert Inlet)	30	LF
		49+52 LT (Culvert Inlet)	30	LF
		52+26 RT to 52+47 RT (Wetland Area)	125	LF
		52+37 RT to 52+52 RT (Wetland Area)	60	LF
		53+03 RT (Culvert Inlet)	30	LF
		53+03 RT to 56+84 RT (Wetland Area)	780	LF
		53+03 LT to 56+62 LT (Wetland Area)	730	LF
		53+11 RT (Culvert Inlet)	30	LF
		53+17 LT (Cuvlert Inlet)	30	LF
		53+31 RT (Culvert Inlet)	30	LF
		57+16 RT (Cuvlert Inlet)	30	LF
		57+24 RT to 61+24 RT (Wetland Area)	820	LF
		57+27 RT to 61+13 RT (Wetland Area)	710	LF
		57+31 LT (Culvert Inlet)	30	LF
		57+37 RT (Culvert Inlet)	30	LF
		58+93 LT (Culvert Inlet)	30	LF
		61+60 LT (Culvert Inlet)	30	LF
		61+84 RT to 65+86 RT (Wetland Area)	825	LF
		61+91 RT (Culvert Inlet)	30	LF
		62+88 LT (Culvert Inlet)	30	LF
		64+46 LT (Culvert Inlet)	30	LF
		65+87 LT to 66+15 LT (Wetland Area)	105	LF
		65+95 RT to 66+15 RT (Wetland Area)	70	LF
		66+17 RT to 76+95 RT (Wetland Area)	2185	LF
		76+22 RT to 76+37 RT (Wetland Area)	50	LF
		76+39 RT to 76+49 RT (Wetland Area)	40	LF
		76+45 RT (Culvert Inlet)	30	LF
		76+97 RT (Culvert Inlet)	30	LF
		77+05 RT (Culvert Inlet)	30	LF
		77+49 RT to 79+24 RT (Wetland Area)	510	LF
		78+31 RT (Culvert Inlet)	30	LF
		79+47 RT to 85+81 RT (Wetland Area)	1185	LF
		79+56 RT (Culvert Inlet)	30	LF
261	0113	REMOVE FIBER ROLLS 12IN		
		Same Locations & Lengths as Listed Above		

Fiber Rolls

Supported Silt Fence

Temporary Seeding & Temporary Mulch

Wetland Mitigation

This document was originally issued and sealed by William Doerr, Registration Number PE- 7113, on 12/04/15 and the original document is stored at the North Dakota Department of Transportation

Temporary Sediment & Erosion Control

ND 58

Jct 200 to Jct 1804

STATE	PROJECT NO.	SECTION NO.	SHEET NO.
ND	SOIB-7-058(013)000	76	3

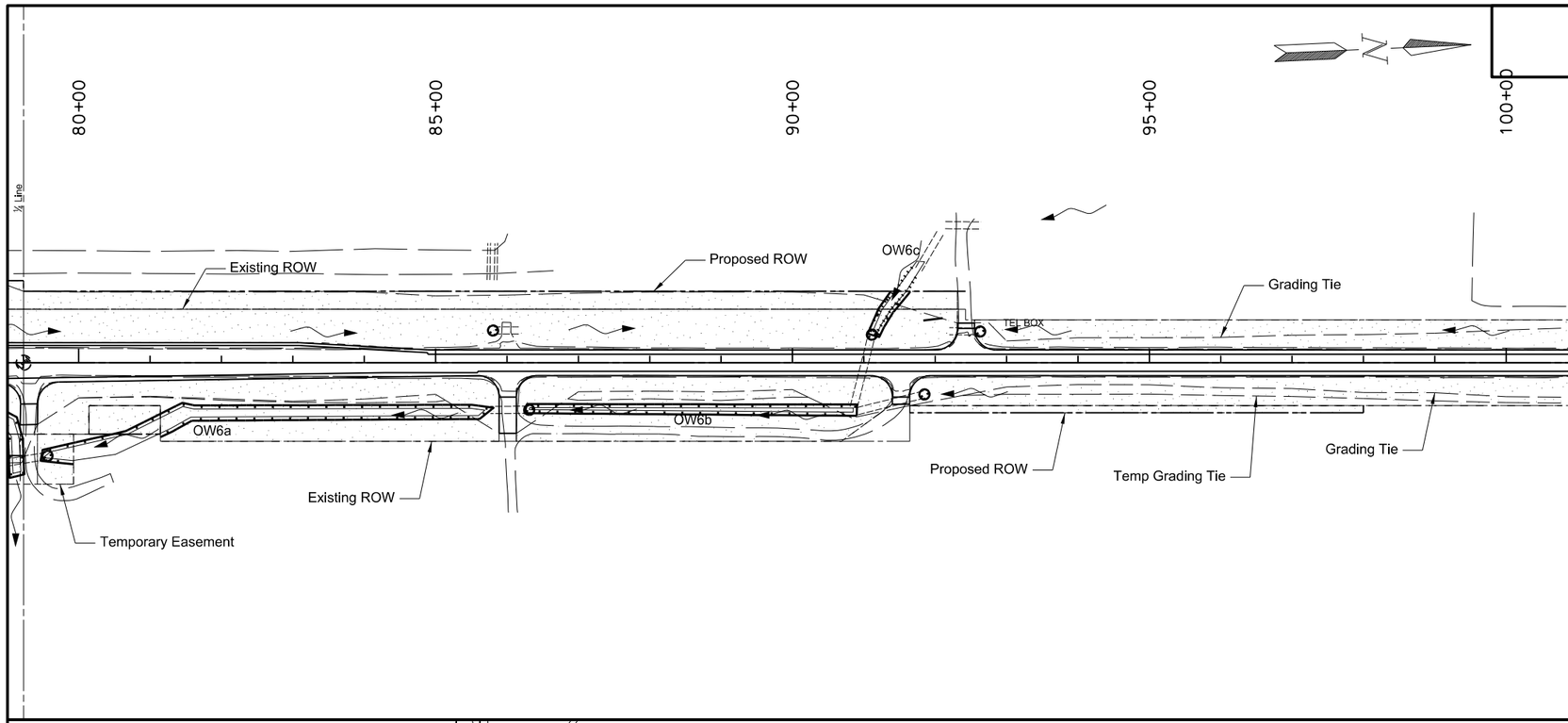

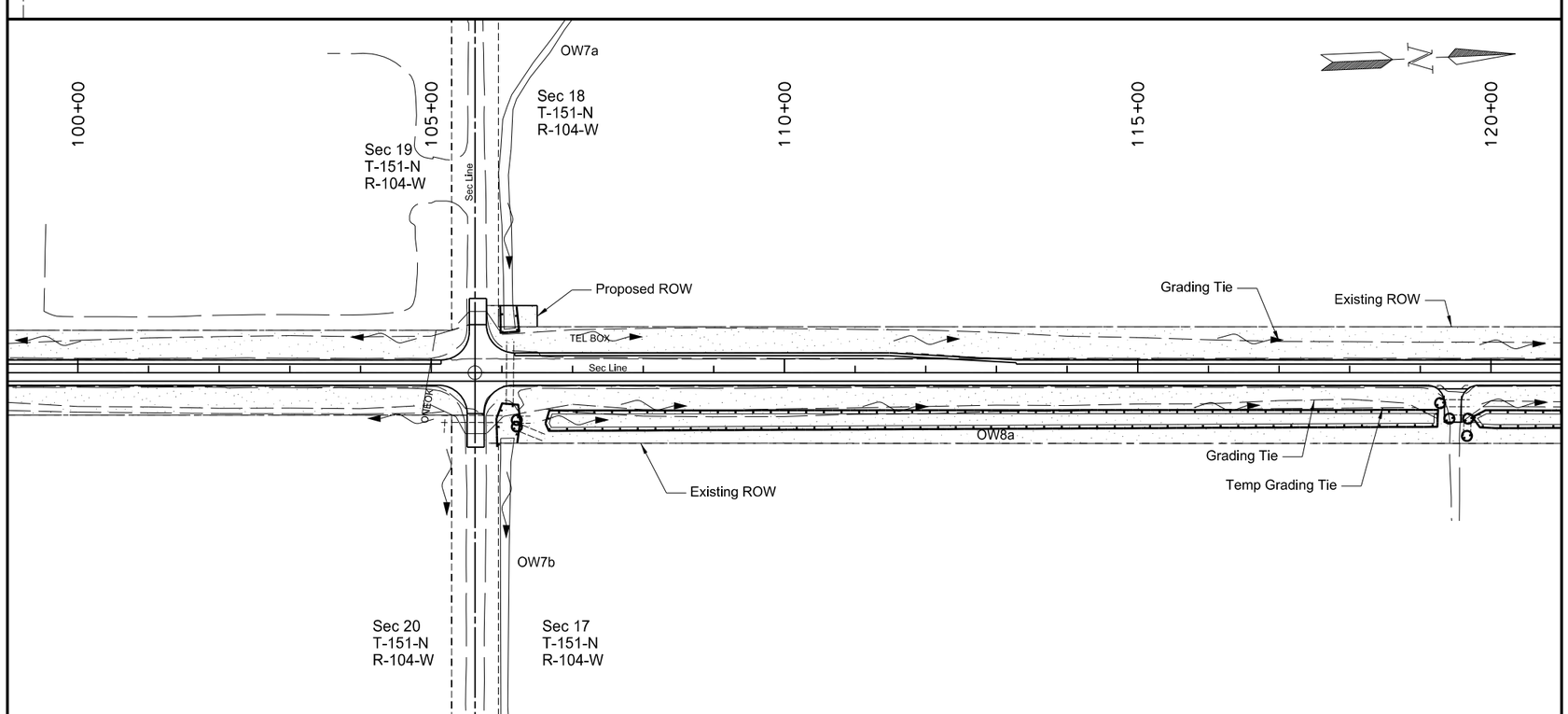

SPEC	CODE	BID ITEM	QUANTITY	UNIT
261	0112	FIBER ROLLS 12IN		
		85+80 LT (Culvert Inlet)	30	LF
		86+24 RT to 90+90 RT (Wetland Area)	955	LF
		86+31 RT (Culvert Inlet)	30	LF
		91+05 LT to 91+65 LT (Wetland Area)	160	LF
		91+11 LT (Culvert Inlet)	30	LF
		91+85 RT (Culvert Inlet)	30	LF
		92+63 LT (Culvert Inlet)	30	LF
		105+92 RT to 106+26 RT (Wetland Area)	140	LF
		105+98 LT to 106+24 LT (Wetland Area)	100	LF
		106+21 RT (Culvert Inlet)	30	LF
		106+22 RT (Culvert Inlet)	30	LF
		106+62 RT to 119+25 RT (Wetland Area)	2570	LF
		119+28 RT (Culvert Inlet)	30	LF
		119+42 RT (Culvert Inlet)	30	LF
		119+66 RT (Culvert Inlet)	30	LF
		119+68 RT (Culvert Inlet)	30	LF
		119+73 RT to 131+86 RT (Wetland Area)	2455	LF
261	0113	REMOVE FIBER ROLLS 12IN		
		85+80 LT (Culvert Inlet)	30	LF
		86+24 RT to 90+90 RT (Wetland Area)	955	LF
		86+31 RT (Culvert Inlet)	30	LF
		91+05 LT to 91+65 LT (Wetland Area)	160	LF
		91+11 LT (Culvert Inlet)	30	LF
		91+85 RT (Culvert Inlet)	30	LF
		92+63 LT (Culvert Inlet)	30	LF
		105+92 RT to 106+26 RT (Wetland Area)	140	LF
		105+98 LT to 106+24 LT (Wetland Area)	100	LF
		106+21 RT (Culvert Inlet)	30	LF
		106+22 RT (Culvert Inlet)	30	LF
		106+62 RT to 119+25 RT (Wetland Area)	2570	LF
		119+28 RT (Culvert Inlet)	30	LF
		119+42 RT (Culvert Inlet)	30	LF
		119+66 RT (Culvert Inlet)	30	LF
		119+68 RT (Culvert Inlet)	30	LF
		119+73 RT to 131+86 RT (Wetland Area)	2455	LF

Fiber Rolls

Supported Silt Fence

Temporary Seeding & Temporary Mulch

Wetland Mitigation

This document was originally issued and sealed by William Doerr, Registration Number PE- 7113, on 12/04/15 and the original document is stored at the North Dakota Department of Transportation

Temporary Sediment & Erosion Control

ND 58

Jct 200 to Jct 1804

STATE	PROJECT NO.	SECTION NO.	SHEET NO.
ND	SOIB-7-058(013)000	76	4

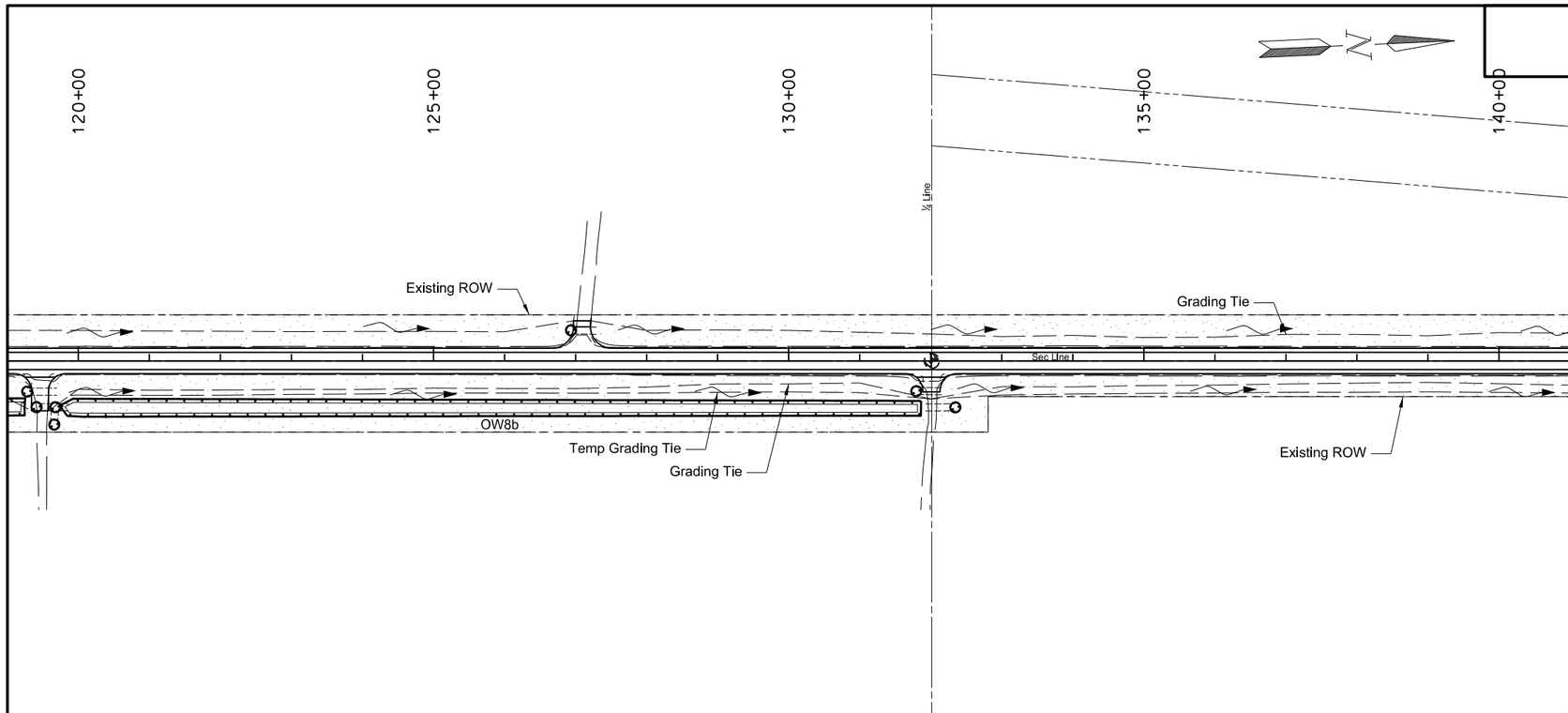

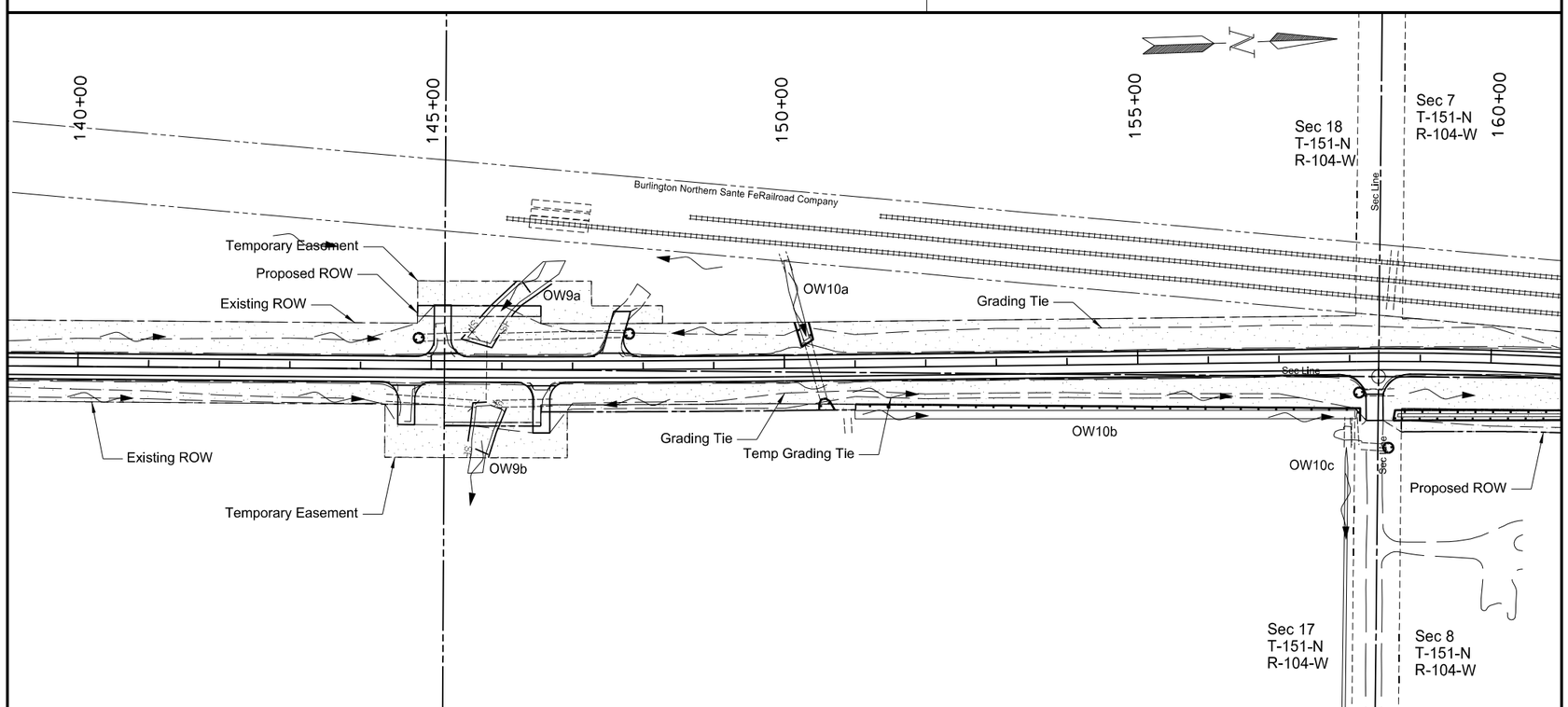

SPEC	CODE	BID ITEM	QUANTITY	UNIT
260	0200	SILT FENCE SUPPORTED		
		145+42 LT to 146+75 LT (Fourmile Creek)	290	LF
		145+52 RT to 146+07 RT (Fourmile Creek)	205	LF
260	0201	REMOVE SILT FENCE SUPPORTED		
		145+42 LT to 146+75 LT (Fourmile Creek)	290	LF
		145+52 RT to 146+07 RT (Fourmile Creek)	205	LF
261	0112	FIBER ROLLS 12IN		
		126+94 LT (Culvert Inlet)	30	LF
		131+80 RT (Culvert Inlet)	30	LF
		132+35 RT (Culvert Inlet)	30	LF
		144+82 LT (Culvert Inlet)	30	LF
		147+80 LT (Culvert Inlet)	30	LF
		150+15 LT to 150+41 LT (Wetland Area)	80	LF
		150+48 RT to 150+71 RT (Wetland Area)	45	LF
		151+00 RT to 158+14 RT (Wetland Area)	735	LF
		158+13 RT (Culvert Inlet)	30	LF
		158+55 RT (Culvert Inlet)	30	LF
		158+62 RT to 160+00 RT (Wetland Area)	285	LF
261	0113	REMOVE FIBER ROLLS 12IN		
		126+94 LT (Culvert Inlet)	30	LF
		131+80 RT (Culvert Inlet)	30	LF
		132+35 RT (Culvert Inlet)	30	LF
		144+82 LT (Culvert Inlet)	30	LF
		147+80 LT (Culvert Inlet)	30	LF
		150+15 LT to 150+41 LT (Wetland Area)	80	LF
		150+48 RT to 150+71 RT (Wetland Area)	45	LF
		151+00 RT to 158+14 RT (Wetland Area)	735	LF
		158+13 RT (Culvert Inlet)	30	LF
		158+55 RT (Culvert Inlet)	30	LF
		158+62 RT to 160+00 RT (Wetland Area)	285	LF
262	0100	FLOTATION SILT CURTAIN		
		145+70 RT (Fourmile Creek)	40	LF
		146+30 LT (Fourmile Creek)	40	LF
262	0101	REMOVE FLOTATION SILT CURTAIN		
		145+70 RT (Fourmile Creek)	40	LF
		146+30 LT (Fourmile Creek)	40	LF

Fiber Rolls

Supported Silt Fence

Temporary Seeding & Temporary Mulch

Wetland Mitigation

This document was originally issued and sealed by William Doerr, Registration Number PE- 7113, on 12/04/15 and the original document is stored at the North Dakota Department of Transportation

Temporary Sediment & Erosion Control

ND 58

Jct 200 to Jct 1804

STATE	PROJECT NO.	SECTION NO.	SHEET NO.
ND	SOIB-7-058(013)000	76	5

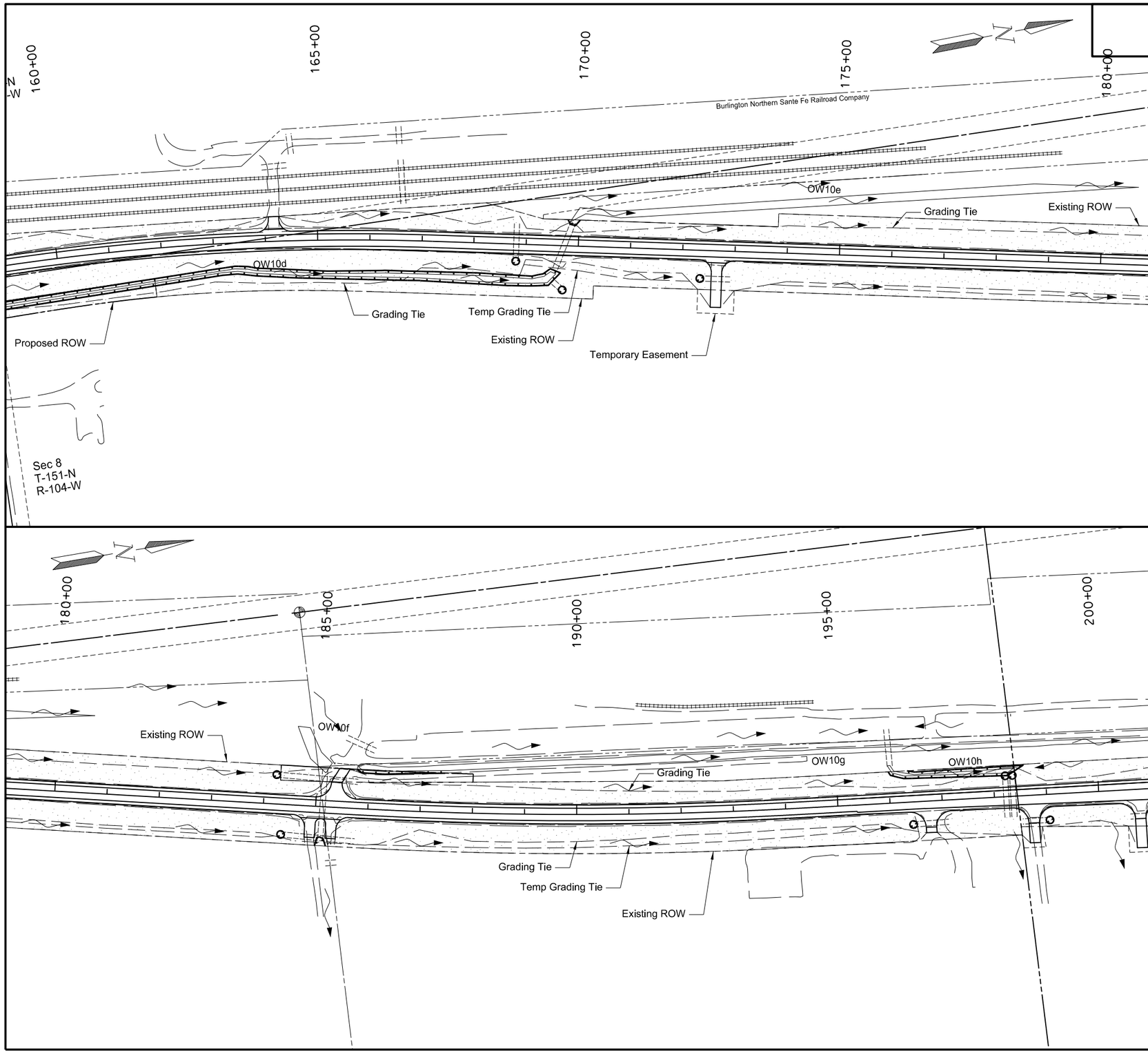

SPEC	CODE	BID ITEM	QUANTITY	UNIT
261	0112	FIBER ROLLS 12IN		
		160+00 RT to 169+67 RT (Wetland Area)	1930	LF
		168+81 RT (Culvert Inlet)	30	LF
		169+72 RT (Culvert Inlet)	30	LF
		169+79 LT to 170+02 LT (Wetland Area)	35	LF
		172+34 RT (Culvert Inlet)	30	LF
		184+22 LT (Culvert Inlet)	30	LF
		184+36 RT (Culvert Inlet)	30	LF
		185+02 RT to 185+23 RT (Wetland Area)	45	LF
		185+76 LT to 187+45 LT (Wetland Area)	170	LF
		196+00 LT to 198+58 LT (Wetland Area)	490	LF
		196+43 RT (Culvert Inlet)	30	LF
		198+23 LT (Culvert Inlet)	30	LF
		198+36 LT (Culvert Inlet)	30	LF
		199+04 RT (Culvert Inlet)	30	LF
261	0113	REMOVE FIBER ROLLS 12IN		
		160+00 RT to 169+67 RT (Wetland Area)	1930	LF
		168+81 RT (Culvert Inlet)	30	LF
		169+72 RT (Culvert Inlet)	30	LF
		169+79 LT to 170+02 LT (Wetland Area)	35	LF
		172+34 RT (Culvert Inlet)	30	LF
		184+22 LT (Culvert Inlet)	30	LF
		184+36 RT (Culvert Inlet)	30	LF
		185+02 RT to 185+23 RT (Wetland Area)	45	LF
		185+76 LT to 187+45 LT (Wetland Area)	170	LF
		196+00 LT to 198+58 LT (Wetland Area)	490	LF
		196+43 RT (Culvert Inlet)	30	LF
		198+23 LT (Culvert Inlet)	30	LF
		198+36 LT (Culvert Inlet)	30	LF
		199+04 RT (Culvert Inlet)	30	LF

Fiber Rolls

Supported Silt Fence

Temporary Seeding & Temporary Mulch

Wetland Mitigation

This document was originally issued and sealed by William Doerr, Registration Number PE- 7113, on 12/04/15 and the original document is stored at the North Dakota Department of Transportation

Temporary Sediment & Erosion Control

ND 58

Jct 200 to Jct 1804

STATE	PROJECT NO.	SECTION NO.	SHEET NO.
ND	SOIB-7-058(013)000	76	6

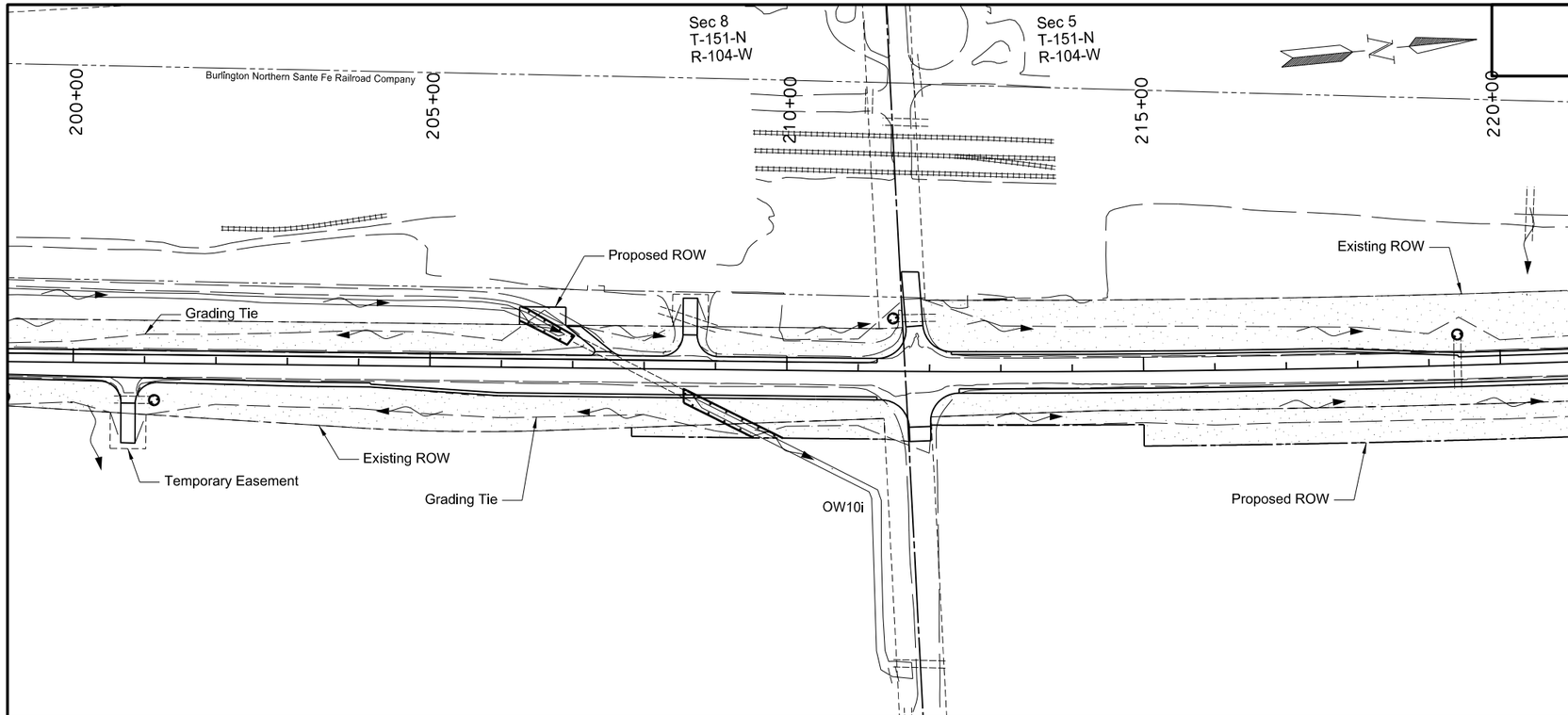

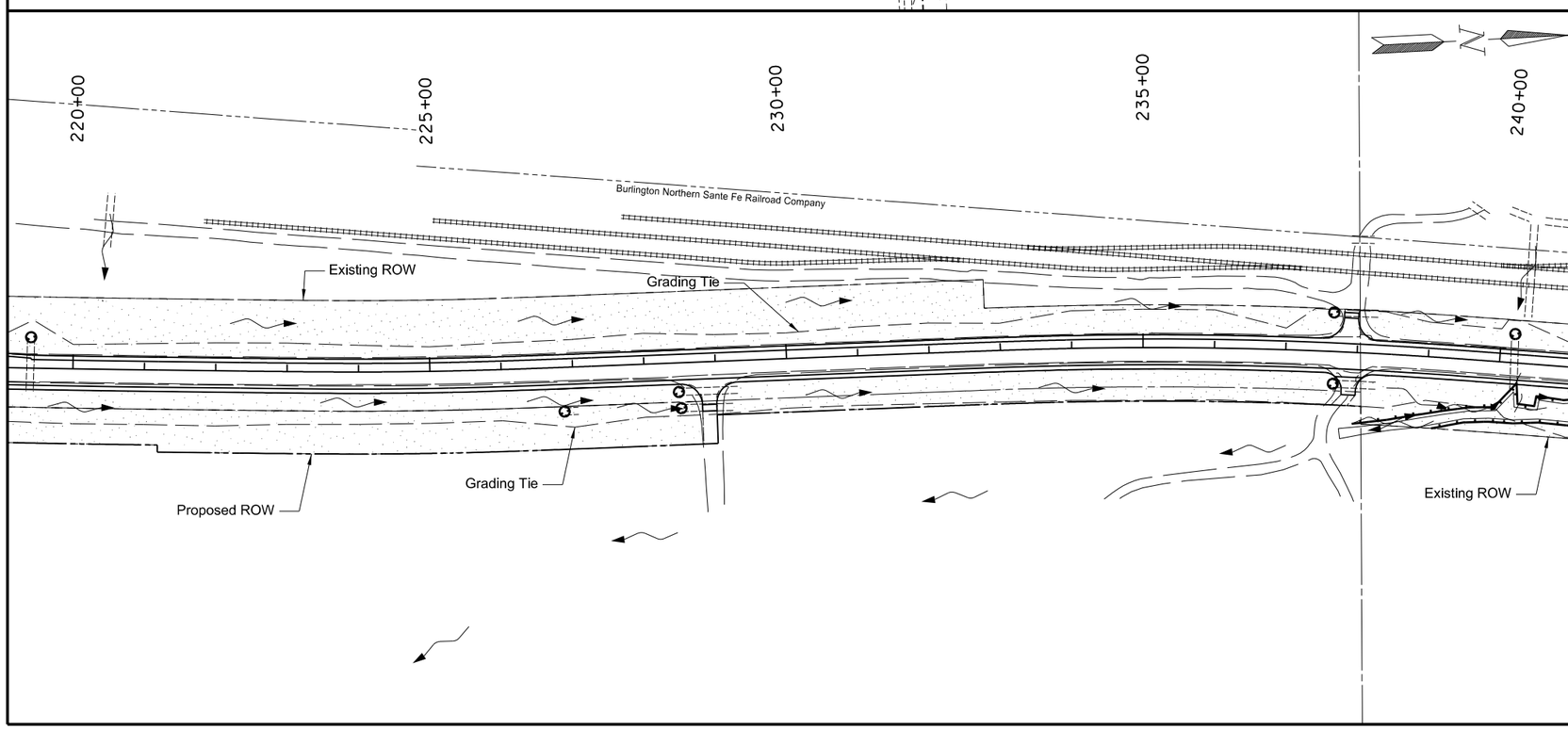

SPEC	CODE	BID ITEM	QUANTITY	UNIT
261	0112	FIBER ROLLS 12IN		
		201+14 RT (Culvert Inlet)	30	LF
		206+25 LT to 207+02 LT (Wetland Area)	175	LF
		208+56 RT to 209+96 RT (Wetland Area)	285	LF
		211+48 LT (Culvert Inlet)	30	LF
		219+41 LT (Culvert Inlet)	30	LF
		226+87 RT (Culvert Inlet)	30	LF
		228+48 RT (Culvert Inlet)	30	LF
		228+50 RT (Culvert Inlet)	30	LF
		237+66 LT (Culvert Inlet)	30	LF
		237+68 RT (Culvert Inlet)	30	LF
		237+97 RT to 240+00 RT (Wetland Area)	205	LF
		239+10 RT to 240+00 RT (Wetland Area)	90	LF
261	0113	REMOVE FIBER ROLLS 12IN		
		201+14 RT (Culvert Inlet)	30	LF
		206+25 LT to 207+02 LT (Wetland Area)	175	LF
		208+56 RT to 209+96 RT (Wetland Area)	285	LF
		211+48 LT (Culvert Inlet)	30	LF
		219+41 LT (Culvert Inlet)	30	LF
		226+87 RT (Culvert Inlet)	30	LF
		228+48 RT (Culvert Inlet)	30	LF
		228+50 RT (Culvert Inlet)	30	LF
		237+66 LT (Culvert Inlet)	30	LF
		237+68 RT (Culvert Inlet)	30	LF
		237+97 RT to 240+00 RT (Wetland Area)	205	LF
		239+10 RT to 240+00 RT (Wetland Area)	90	LF

Fiber Rolls

Supported Silt Fence

Temporary Seeding & Temporary Mulch

Wetland Mitigation

This document was originally issued and sealed by William Doerr, Registration Number PE- 7113, on 12/04/15 and the original document is stored at the North Dakota Department of Transportation

Temporary Sediment & Erosion Control

ND 58

Jct 200 to Jct 1804

STATE	PROJECT NO.	SECTION NO.	SHEET NO.
ND	SOIB-7-058(013)000	76	7

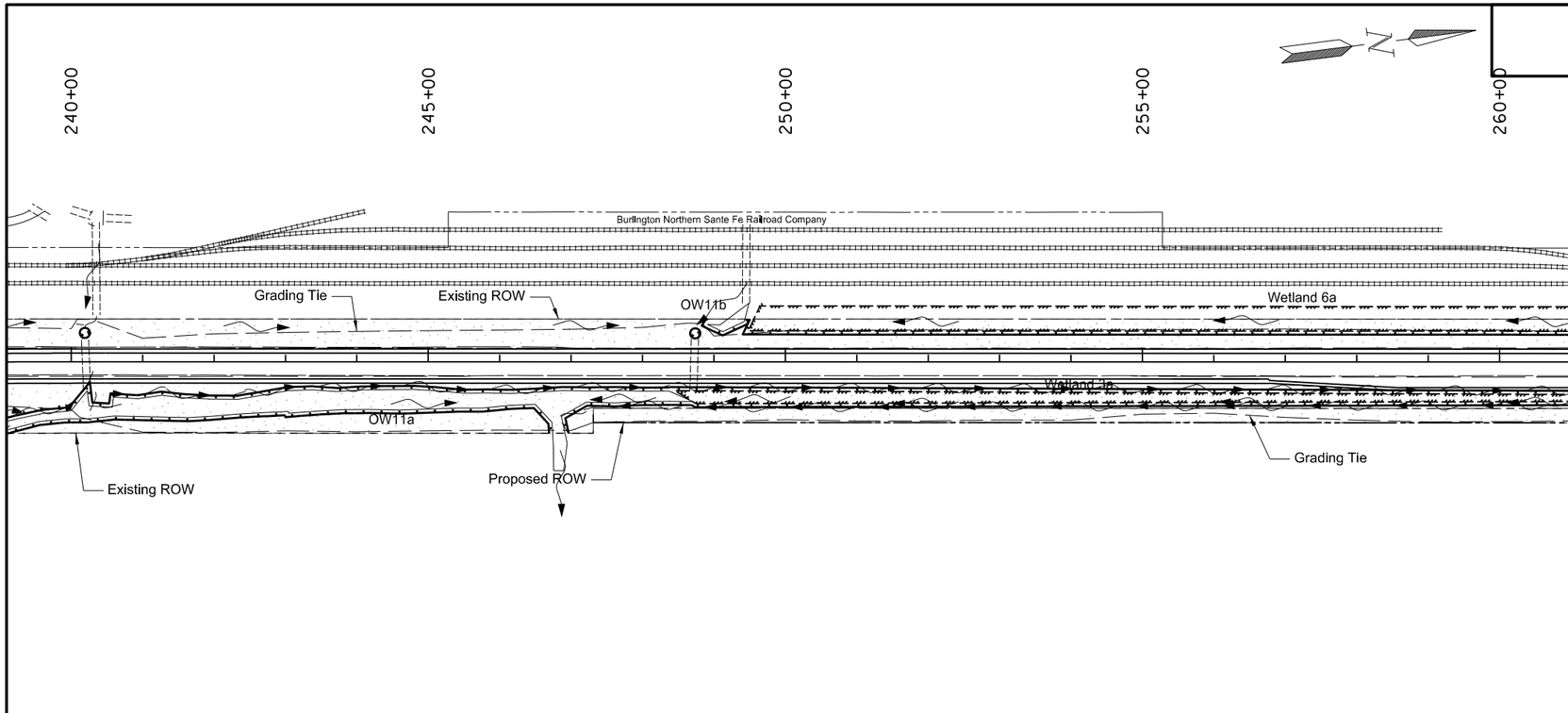

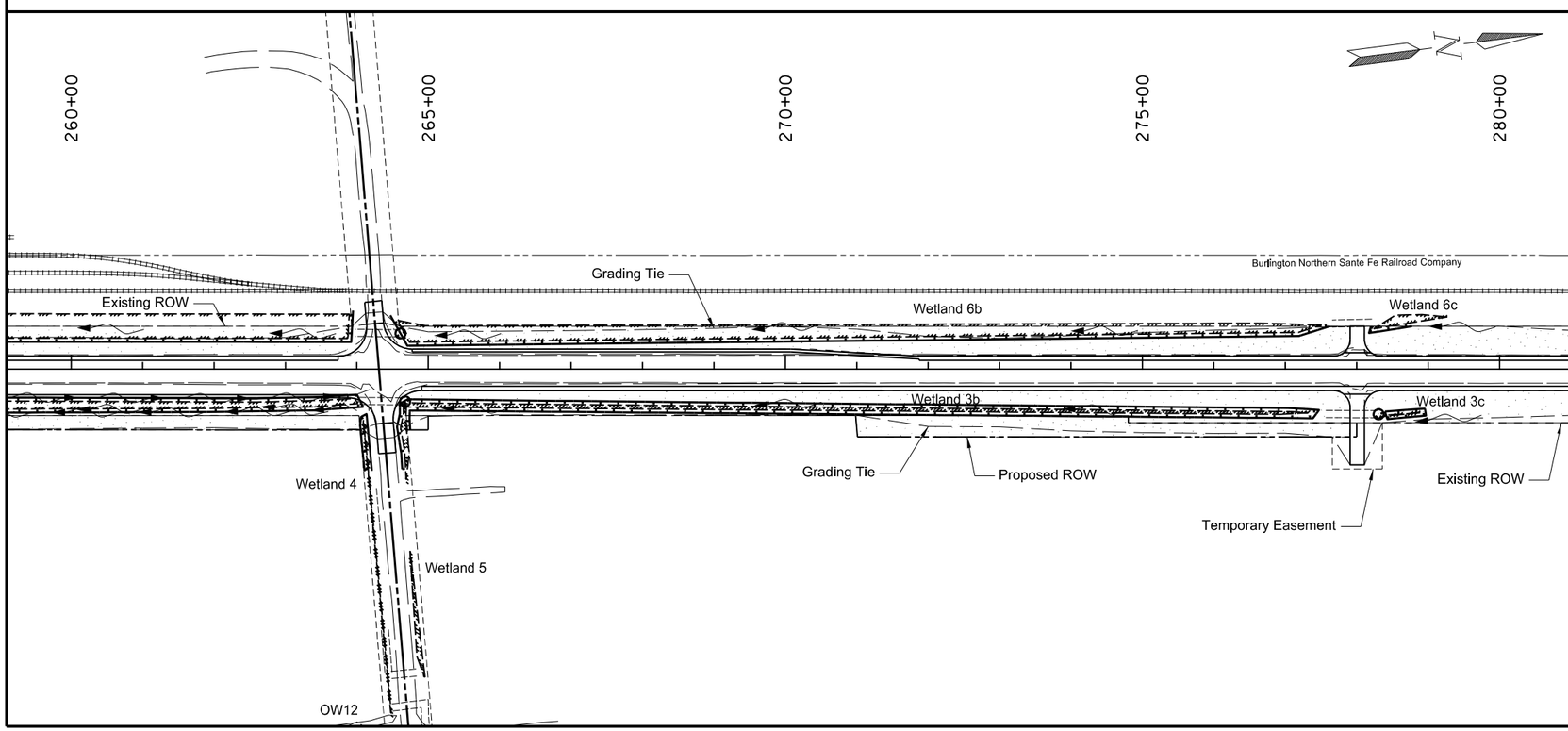

SPEC	CODE	BID ITEM	QUANTITY	UNIT
261	0112	FIBER ROLLS 12IN		
		240+00 RT to 264+08 RT (Wetland Area)	4220	LF
		240+00 RT to 246+69 RT (Wetland Area)	695	LF
		240+19 LT (Culvert Inlet)	30	LF
		248+74 LT (Culvert Inlet)	30	LF
		248+83 LT to 249+49 LT (Wetland Area)	90	LF
		249+40 LT to 263+94 LT (Wetland Area)	1520	LF
		264+05 RT to 264+21 RT (Wetland Area)	165	LF
		264+47 LT to 277+62 LT (Wetland Area)	1345	LF
		264+56 RT to 277+47 RT (Wetland Area)	2690	LF
		264+61 LT (Culvert Inlet)	30	LF
		264+68 RT (Culvert Inlet)	30	LF
		278+17 LT to 278+78 LT (Wetland Area)	70	LF
		278+31 RT (Culvert Inlet)	30	LF
		278+40 RT to 278+97 RT (Wetland Area)	130	LF
261	0113	REMOVE FIBER ROLLS 12IN		
		240+00 RT to 264+08 RT (Wetland Area)	4220	LF
		240+00 RT to 246+69 RT (Wetland Area)	695	LF
		240+19 LT (Culvert Inlet)	30	LF
		248+74 LT (Culvert Inlet)	30	LF
		248+83 LT to 249+49 LT (Wetland Area)	90	LF
		249+40 LT to 263+94 LT (Wetland Area)	1520	LF
		264+05 RT to 264+21 RT (Wetland Area)	165	LF
		264+47 LT to 277+62 LT (Wetland Area)	1345	LF
		264+56 RT to 277+47 RT (Wetland Area)	2690	LF
		264+61 LT (Culvert Inlet)	30	LF
		264+68 RT (Culvert Inlet)	30	LF
		278+17 LT to 278+78 LT (Wetland Area)	70	LF
		278+31 RT (Culvert Inlet)	30	LF
		278+40 RT to 278+97 RT (Wetland Area)	130	LF

Fiber Rolls

Supported Silt Fence

Temporary Seeding & Temporary Mulch

Wetland Mitigation

This document was originally issued and sealed by William Doerr, Registration Number PE- 7113, on 12/04/15 and the original document is stored at the North Dakota Department of Transportation

Temporary Sediment & Erosion Control

ND 58

Jct 200 to Jct 1804

STATE	PROJECT NO.	SECTION NO.	SHEET NO.
ND	SOIB-7-058(013)000	76	8

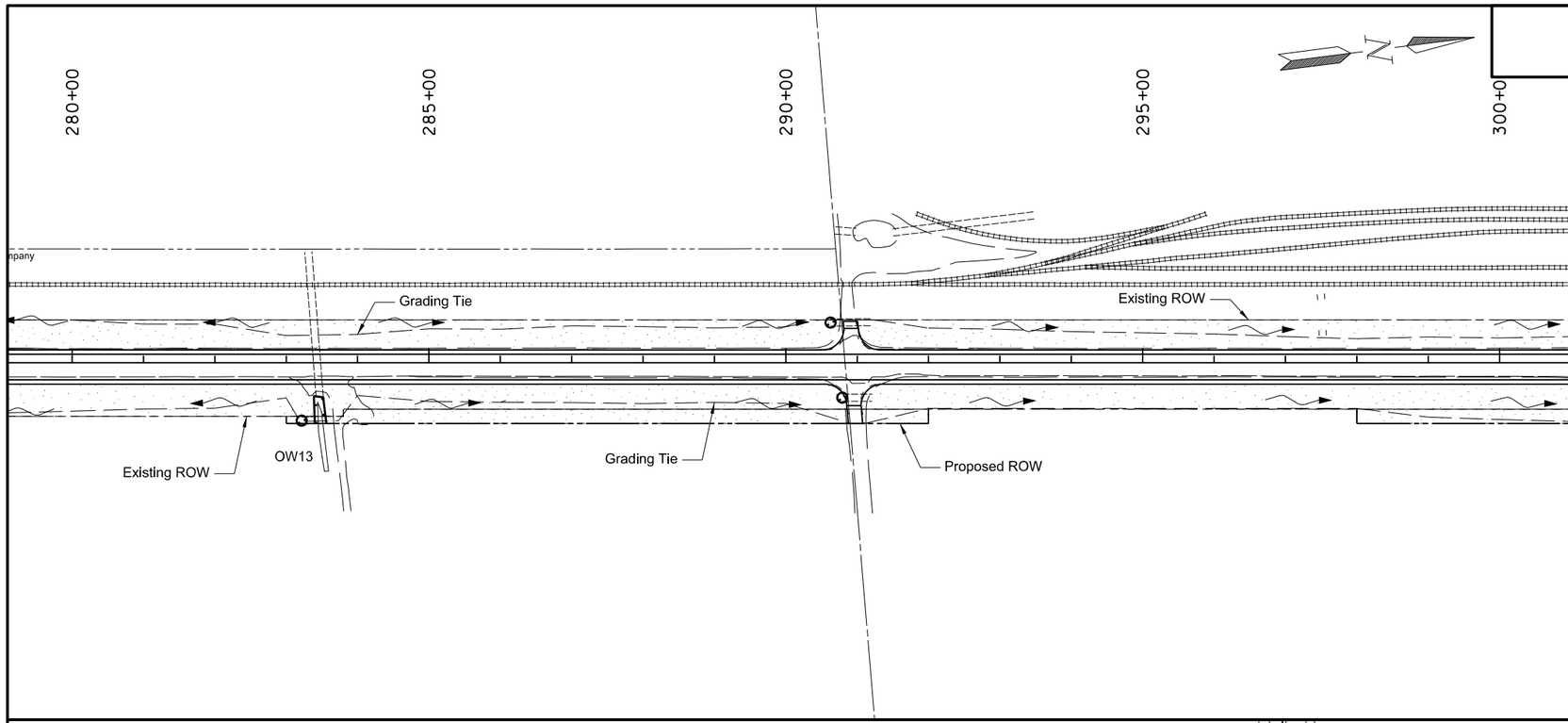

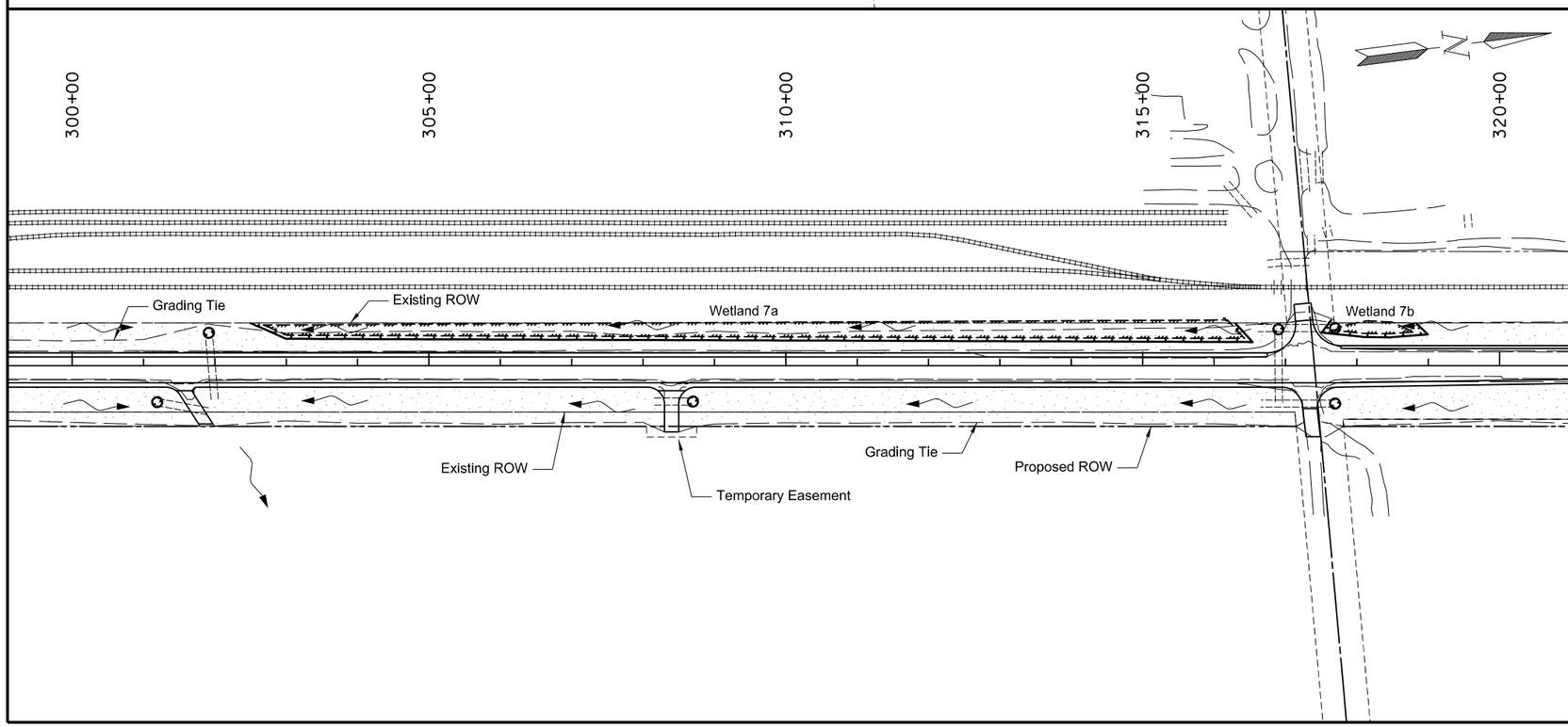

SPEC	CODE	BID ITEM	QUANTITY	UNIT
261	0112	FIBER ROLLS 12IN		
		283+22 RT (Culvert Inlet)	30	LF
		283+39 RT to 283+56 RT (Wetland Area)	90	LF
		290+63 LT (Culvert Inlet)	30	LF
		290+79 RT (Culvert Inlet)	30	LF
		301+19 RT (Culvert Inlet)	30	LF
		301+92 LT (Culvert Inlet)	30	LF
		302+49 LT to 316+54 LT (Wetland Area)	1445	LF
		308+70 RT (Culvert Inlet)	30	LF
		316+90 LT (Culvert Inlet)	30	LF
		317+51 LT to 319+00 LT (Wetland Area)	200	LF
		317+69 LT (Culvert Inlet)	30	LF
		317+70 RT (Culvert Inlet)	30	LF
261	0113	REMOVE FIBER ROLLS 12IN		
		283+22 RT (Culvert Inlet)	30	LF
		283+39 RT to 283+56 RT (Wetland Area)	90	LF
		290+63 LT (Culvert Inlet)	30	LF
		290+79 RT (Culvert Inlet)	30	LF
		301+19 RT (Culvert Inlet)	30	LF
		301+92 LT (Culvert Inlet)	30	LF
		302+49 LT to 316+54 LT (Wetland Area)	1445	LF
		308+70 RT (Culvert Inlet)	30	LF
		316+90 LT (Culvert Inlet)	30	LF
		317+51 LT to 319+00 LT (Wetland Area)	200	LF
		317+69 LT (Culvert Inlet)	30	LF
		317+70 RT (Culvert Inlet)	30	LF

Fiber Rolls

Supported Silt Fence

Temporary Seeding & Temporary Mulch

Wetland Mitigation

This document was originally issued and sealed by William Doerr, Registration Number PE- 7113, on 12/04/15 and the original document is stored at the North Dakota Department of Transportation

Temporary Sediment & Erosion Control

ND 58

Jct 200 to Jct 1804

STATE	PROJECT NO.	SECTION NO.	SHEET NO.
ND	SOIB-7-058(013)000	76	9

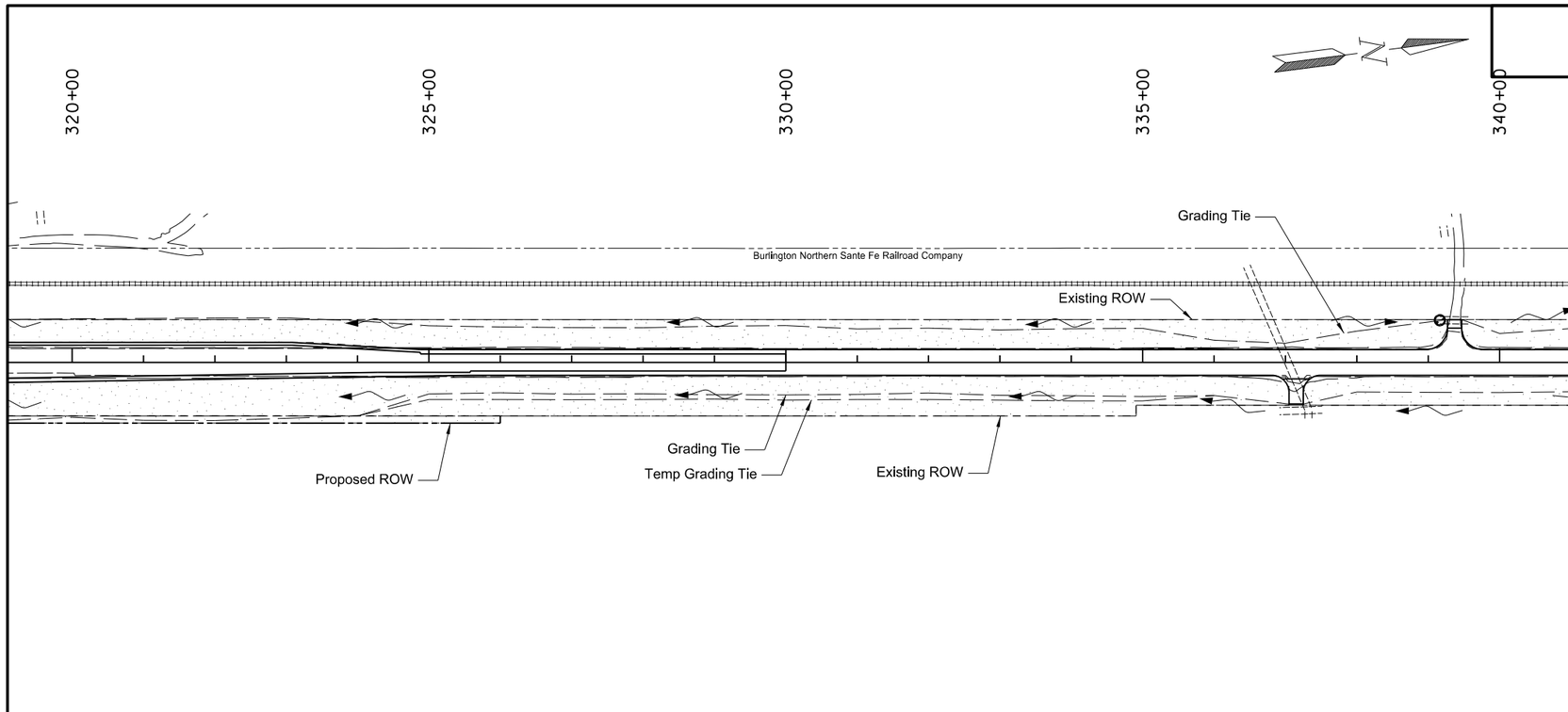

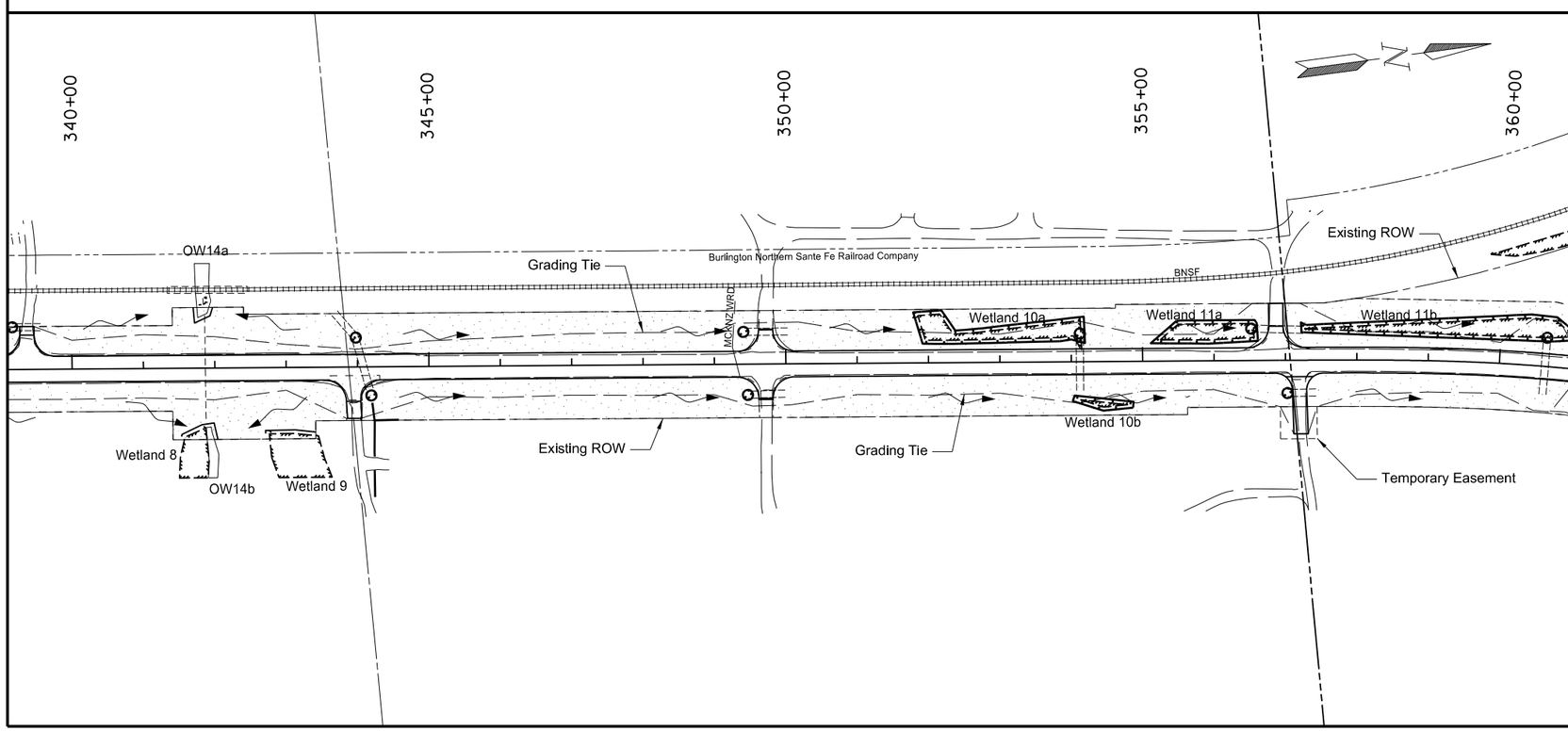

SPEC	CODE	BID ITEM	QUANTITY	UNIT
260	0200	SILT FENCE SUPPORTED		
		341+52 RT to 342+04 RT (Wetland Area)	80	LF
		341+70 LT to 341+97 LT (Wetland Area)	60	LF
		342+70 RT to 343+41 RT (Wetland Area)	85	LF
260	0201	REMOVE SILT FENCE SUPPORTED		
		341+52 RT to 342+04 RT (Wetland Area)	80	LF
		341+70 LT to 341+97 LT (Wetland Area)	60	LF
		342+70 RT to 343+41 RT (Wetland Area)	85	LF
261	0112	FIBER ROLLS 12IN		
		339+16 LT (Culvert Inlet)	30	LF
		343+98 LT (Culvert Inlet)	30	LF
		344+19 RT (Culvert Inlet)	30	LF
		349+41 LT (Culvert Inlet)	30	LF
		349+47 RT (Culvert Inlet)	30	LF
		351+79 LT to 354+19 LT (Wetland Area)	565	LF
		354+02 RT to 354+87 RT (Wetland Area)	185	LF
		354+12 LT (Culvert Inlet)	30	LF
		355+12 LT to 356+62 LT (Wetland Area)	340	LF
		356+53 LT (Culvert Inlet)	30	LF
		357+03 RT (Culvert Inlet)	30	LF
		357+23 LT to 360+00 LT (Wetland Area)	575	LF
261	0113	REMOVE FIBER ROLLS 12IN		
		339+16 LT (Culvert Inlet)	30	LF
		343+98 LT (Culvert Inlet)	30	LF
		344+19 RT (Culvert Inlet)	30	LF
		349+41 LT (Culvert Inlet)	30	LF
		349+47 RT (Culvert Inlet)	30	LF
		351+79 LT to 354+19 LT (Wetland Area)	565	LF
		354+02 RT to 354+87 RT (Wetland Area)	185	LF
		354+12 LT (Culvert Inlet)	30	LF
		355+12 LT to 356+62 LT (Wetland Area)	340	LF
		356+53 LT (Culvert Inlet)	30	LF
		357+03 RT (Culvert Inlet)	30	LF
		357+23 LT to 360+00 LT (Wetland Area)	575	LF

Fiber Rolls

Supported Silt Fence

Temporary Seeding & Temporary Mulch

Wetland Mitigation

This document was originally issued and sealed by William Doerr, Registration Number PE- 7113, on 12/04/15 and the original document is stored at the North Dakota Department of Transportation

Temporary Sediment & Erosion Control

ND 58

Jct 200 to Jct 1804

STATE	PROJECT NO.	SECTION NO.	SHEET NO.
ND	SOIB-7-058(013)000	76	10

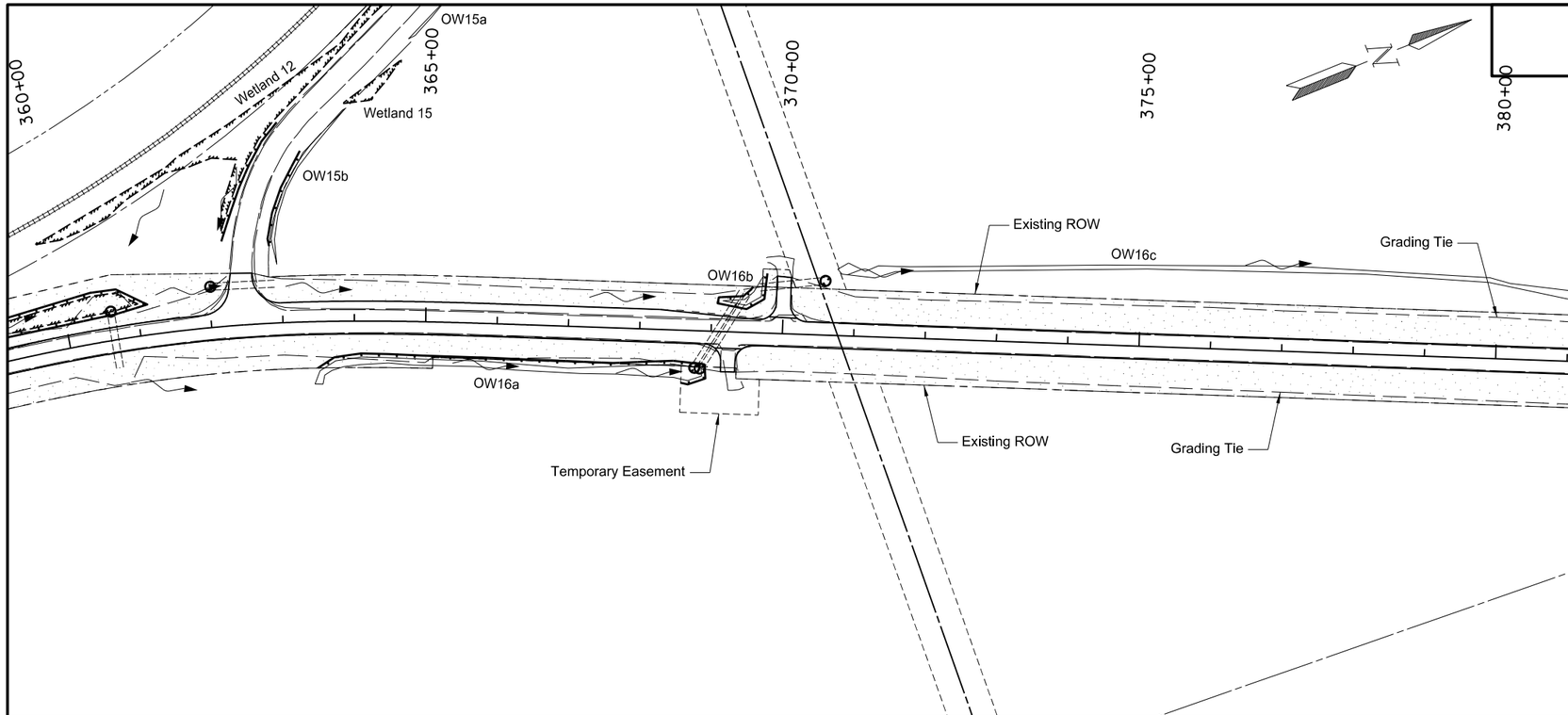

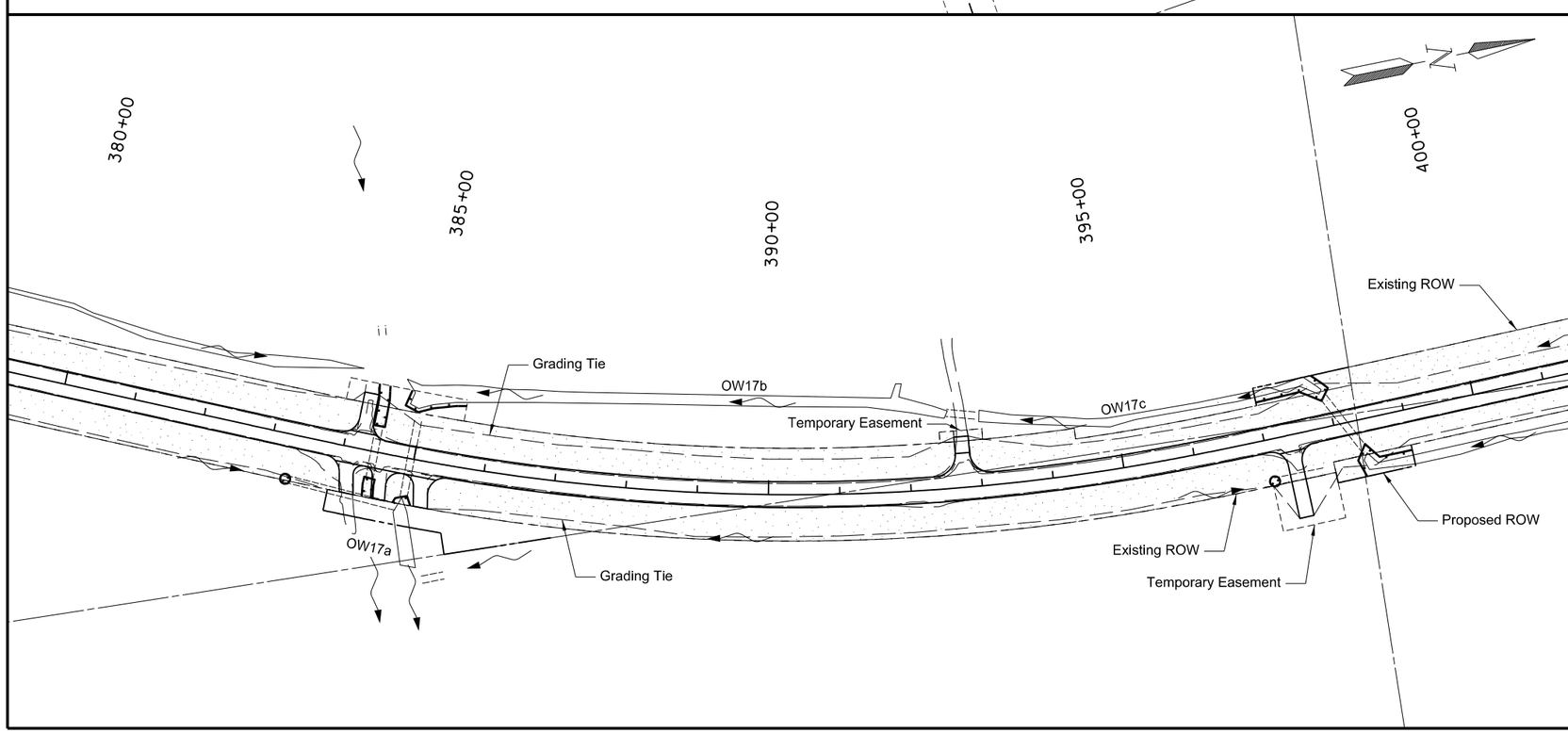

SPEC	CODE	BID ITEM	QUANTITY	UNIT
261	0112	FIBER ROLLS 12IN		
		360+00 LT to 361+15 LT (Wetland Area)	245	LF
		360+64 LT (Culvert Inlet)	30	LF
		362+03 LT (Culvert Inlet)	30	LF
		362+23 LT to 363+03 LT (Wetland Area)	185	LF
		362+86 LT to 364+31 LT (Wetland Area)	145	LF
		363+48 RT to 368+94 RT (Wetland Area)	605	LF
		368+79 RT (Culvert Inlet)	30	LF
		368+86 RT (Culvert Inlet)	30	LF
		369+08 LT to 369+76 LT (Wetland Area)	170	LF
		370+58 LT (Culvert Inlet)	30	LF
		383+30 RT (Culvert Inlet)	30	LF
		384+36 LT to 384+52 LT (Wetland Area)	135	LF
		384+37 RT to 384+52 RT (Wetland Area)	70	LF
		384+75 LT to 385+61 LT (Wetland Area)	110	LF
		384+82 RT to 385+07 RT (Wetland Area)	40	LF
		397+00 LT to 398+03 LT (Wetland Area)	145	LF
		397+03 RT (Culvert Inlet)	30	LF
		398+23 RT to 399+00 RT (Wetland Area)	125	LF
261	0113	REMOVE FIBER ROLLS 12IN		
		360+00 LT to 361+15 LT (Wetland Area)	245	LF
		360+64 LT (Culvert Inlet)	30	LF
		362+03 LT (Culvert Inlet)	30	LF
		362+23 LT to 363+03 LT (Wetland Area)	185	LF
		362+86 LT to 364+31 LT (Wetland Area)	145	LF
		363+48 RT to 368+94 RT (Wetland Area)	605	LF
		368+79 RT (Culvert Inlet)	30	LF
		368+86 RT (Culvert Inlet)	30	LF
		369+08 LT to 369+76 LT (Wetland Area)	170	LF
		370+58 LT (Culvert Inlet)	30	LF
		383+30 RT (Culvert Inlet)	30	LF
		384+36 LT to 384+52 LT (Wetland Area)	135	LF
		384+37 RT to 384+52 RT (Wetland Area)	70	LF
		384+75 LT to 385+61 LT (Wetland Area)	110	LF
		384+82 RT to 385+07 RT (Wetland Area)	40	LF
		397+00 LT to 398+03 LT (Wetland Area)	145	LF
		397+03 RT (Culvert Inlet)	30	LF
		398+23 RT to 399+00 RT (Wetland Area)	125	LF

Fiber Rolls

Supported Silt Fence

Temporary Seeding & Temporary Mulch

Wetland Mitigation

This document was originally issued and sealed by William Doerr, Registration Number PE- 7113, on 12/04/15 and the original document is stored at the North Dakota Department of Transportation

Temporary Sediment & Erosion Control

ND 58

Jct 200 to Jct 1804

STATE	PROJECT NO.	SECTION NO.	SHEET NO.
ND	SOIB-7-058(013)000	76	11

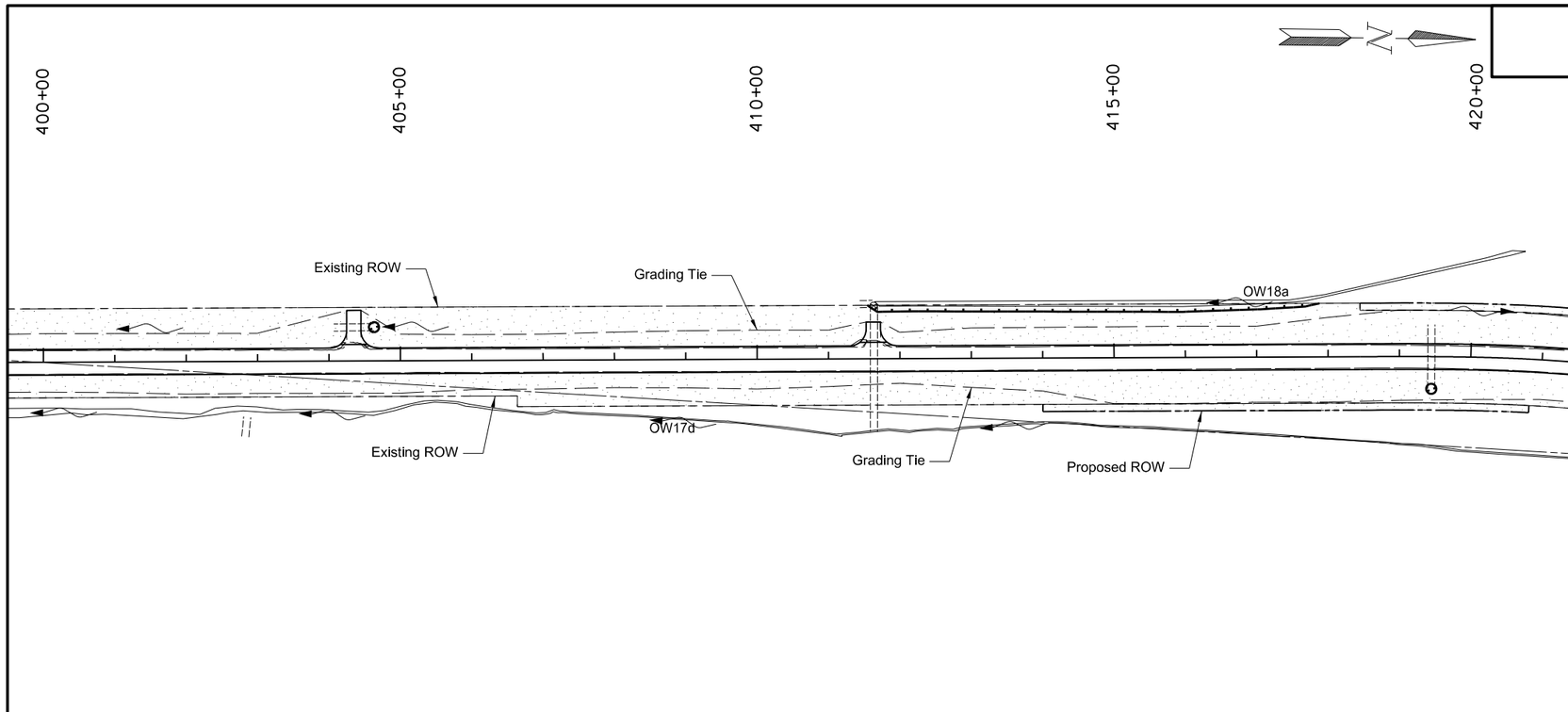

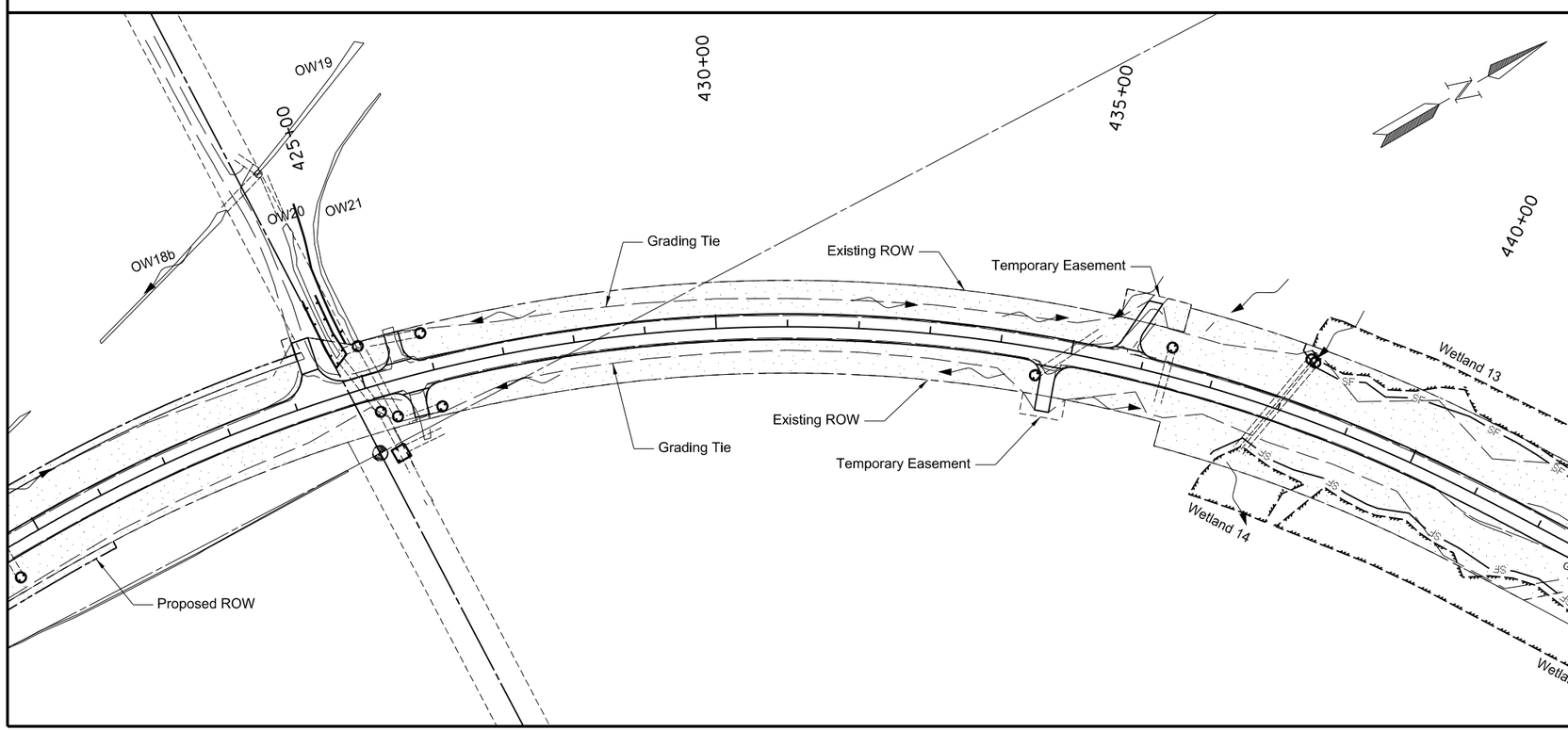

SPEC	CODE	BID ITEM	QUANTITY	UNIT
260	0200	SILT FENCE SUPPORTED		
		437+22 RT to 440+00 RT (Wetland Area)	295	LF
		438+07 LT to 440+00 LT (Wetland Area)	220	LF
260	0201	REMOVE SILT FENCE SUPPORTED		
		437+22 RT to 440+00 RT (Wetland Area)	295	LF
		438+07 LT to 440+00 LT (Wetland Area)	220	LF
261	0112	FIBER ROLLS 12IN		
		404+63 LT (Culvert Inlet)	30	LF
		411+54 LT to 417+88 LT (Wetland Inlet)	635	LF
		419+45 RT (Culvert Inlet)	30	LF
		424+53 LT to 424+89 LT (Wetland Inlet)	225	LF
		425+07 LT (Culvert Inlet)	30	LF
		425+11 RT to 425+37 RT (Wetland Inlet)	80	LF
		425+12 RT (Culvert Inlet)	30	LF
		425+34 RT (Culvert Inlet)	30	LF
		425+94 LT (Culvert Inlet)	30	LF
		425+99 RT (Culvert Inlet)	30	LF
		434+55 RT (Culvert Inlet)	30	LF
		436+35 LT (Culvert Inlet)	30	LF
		438+21 LT (Culvert Inlet)	30	LF
		438+27 LT (Culvert Inlet)	30	LF
261	0113	REMOVE FIBER ROLLS 12IN		
		404+63 LT (Culvert Inlet)	30	LF
		411+54 LT to 417+88 LT (Wetland Inlet)	635	LF
		419+45 RT (Culvert Inlet)	30	LF
		424+53 LT to 424+89 LT (Wetland Inlet)	225	LF
		425+07 LT (Culvert Inlet)	30	LF
		425+11 RT to 425+37 RT (Wetland Inlet)	80	LF
		425+12 RT (Culvert Inlet)	30	LF
		425+34 RT (Culvert Inlet)	30	LF
		425+94 LT (Culvert Inlet)	30	LF
		425+99 RT (Culvert Inlet)	30	LF
		434+55 RT (Culvert Inlet)	30	LF
		436+35 LT (Culvert Inlet)	30	LF
		438+21 LT (Culvert Inlet)	30	LF
		438+27 LT (Culvert Inlet)	30	LF

Fiber Rolls

Supported Silt Fence

Temporary Seeding & Temporary Mulch

Wetland Mitigation

This document was originally issued and sealed by William Doerr, Registration Number PE- 7113, on 12/04/15 and the original document is stored at the North Dakota Department of Transportation

Temporary Sediment & Erosion Control

ND 58

Jct 200 to Jct 1804

STATE	PROJECT NO.	SECTION NO.	SHEET NO.
ND	SOIB-7-058(013)000	76	12

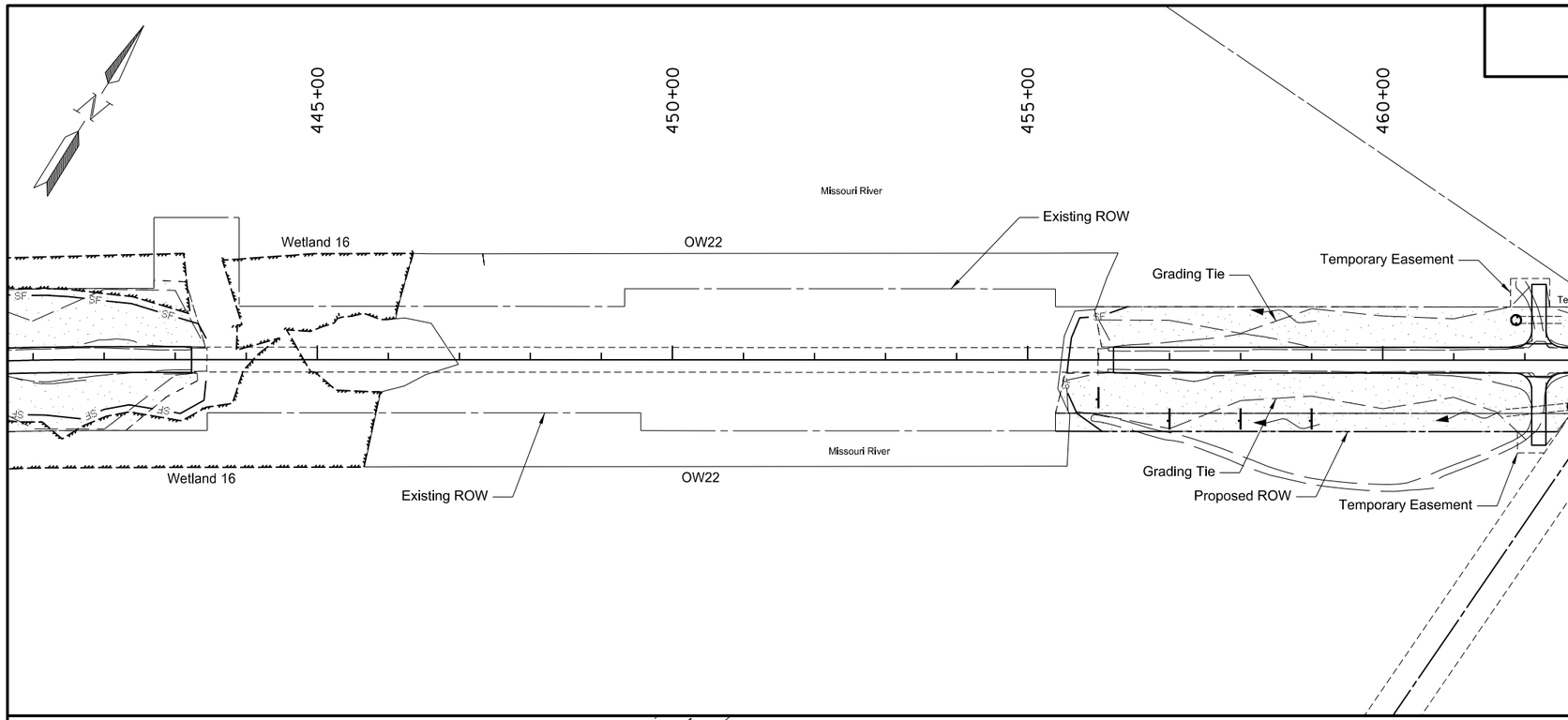

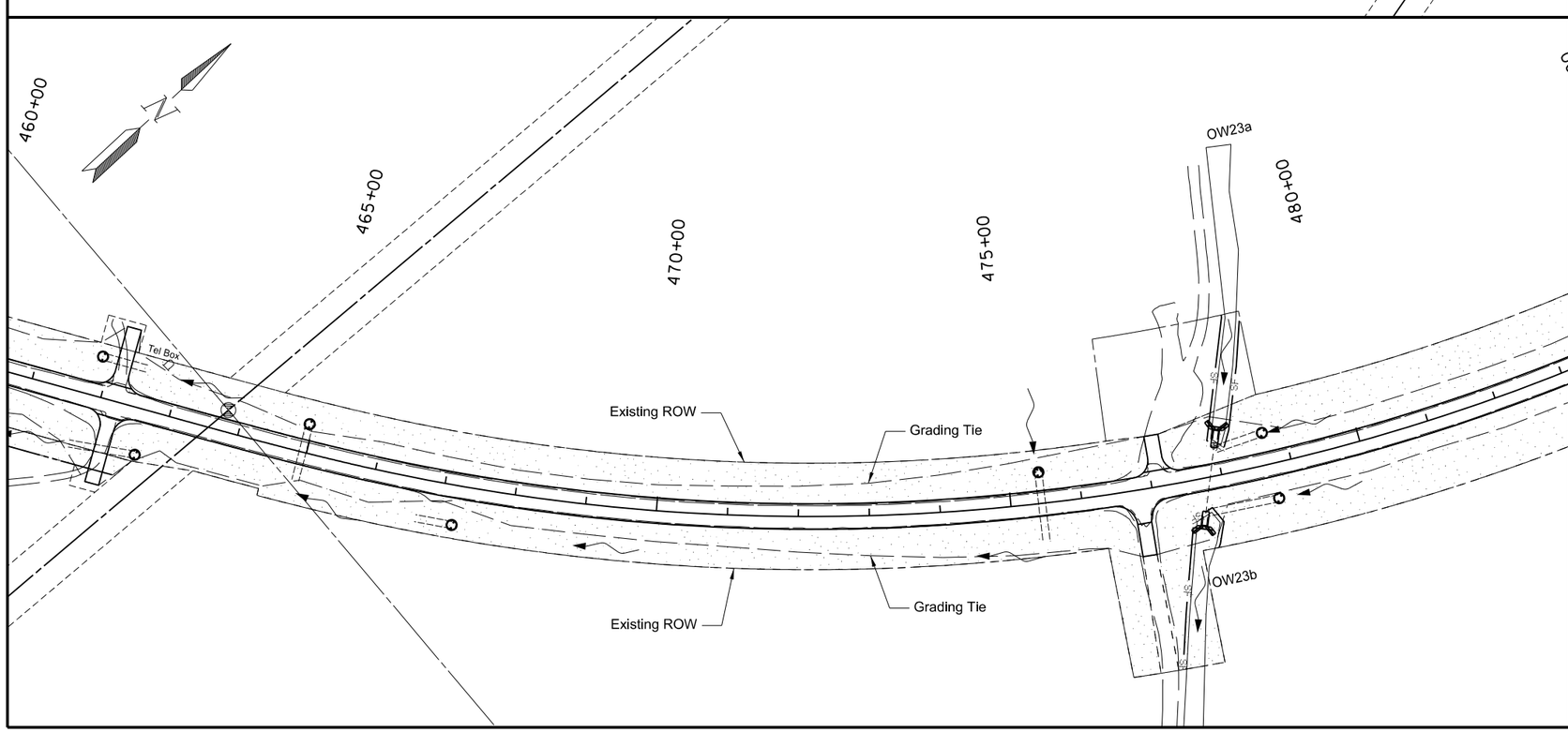

SPEC	CODE	BID ITEM	QUANTITY	UNIT
260	0200	SILT FENCE SUPPORTED		
		440+00 RT to 443+43 RT (Wetland Area)	375	LF
		440+00 LT to 443+44 LT (Wetland Area)	370	LF
		455+58 LT to 456+41 LT (Wetland Area)	130	LF
		455+58 RT to 456+05 RT (Wetland Area)	125	LF
		477+00 RT to 477+90 RT (Wetland Area)	305	LF
		477+89 LT to 478+74 LT (Wetland Area)	400	LF
260	0201	REMOVE SILT FENCE SUPPORTED		
		440+00 RT to 443+43 RT (Wetland Area)	375	LF
		440+00 LT to 443+44 LT (Wetland Area)	370	LF
		455+58 LT to 456+41 LT (Wetland Area)	130	LF
		455+58 RT to 456+05 RT (Wetland Area)	125	LF
		477+00 RT to 477+90 RT (Wetland Area)	305	LF
		477+89 LT to 478+74 LT (Wetland Area)	400	LF
261	0112	FIBER ROLLS 12IN		
		456+00 RT to 459+00 RT (4 @ 100')	120	LF
		461+88 LT (Culvert Inlet)	30	LF
		462+67 RT (Culvert Inlet)	30	LF
		464+94 LT (Culvert Inlet)	30	LF
		467+19 RT (Culvert Inlet)	30	LF
		475+44 LT (Culvert Inlet)	30	LF
		478+68 LT (Culvert (Inlet)	30	LF
		478+71 RT (Culvert Inlet)	30	LF
261	0113	REMOVE FIBER ROLLS 12IN		
		456+00 RT to 459+00 RT (4 @ 100')	120	LF
		461+88 LT (Culvert Inlet)	30	LF
		462+67 RT (Culvert Inlet)	30	LF
		464+94 LT (Culvert Inlet)	30	LF
		467+19 RT (Culvert Inlet)	30	LF
		475+44 LT (Culvert Inlet)	30	LF
		478+68 LT (Culvert (Inlet)	30	LF
		478+71 RT (Culvert Inlet)	30	LF

Fiber Rolls

Supported Silt Fence

Temporary Seeding & Temporary Mulch

Wetland Mitigation

This document was originally issued and sealed by William Doerr, Registration Number PE- 7113, on 12/04/15 and the original document is stored at the North Dakota Department of Transportation

Temporary Sediment & Erosion Control

ND 58

Jct 200 to Jct 1804

STATE	PROJECT NO.	SECTION NO.	SHEET NO.
ND	SOIB-7-058(013)000	76	13

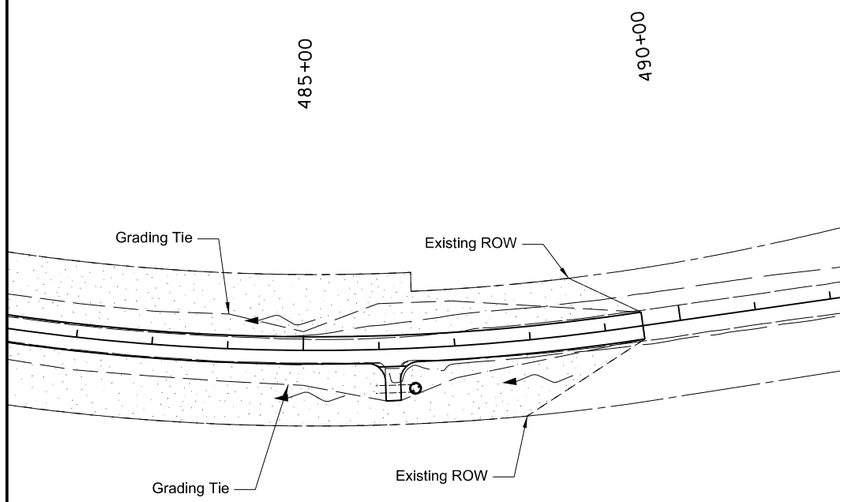

SPEC	CODE	BID ITEM	QUANTITY	UNIT
251	2000	TEMPORARY COVER CROP 4+60 to 489+50	120	Acre
253	0101	STRAW MULCH 4+60 to 489+50	120	Acre
261	0112	FIBER ROLLS 12IN 486+46 RT (Culvert Inlet)	30	LF
261	0113	REMOVE FIBER ROLLS 12IN 486+46 RT (Culvert Inlet)	30	LF

Fiber Rolls

Supported Silt Fence

Temporary Seeding & Temporary Mulch

Wetland Mitigation

This document was originally issued and sealed by William Doerr, Registration Number PE- 7113, on 12/04/15 and the original document is stored at the North Dakota Department of Transportation

Temporary Sediment & Erosion Control

ND 58

Jct 200 to Jct 1804

STATE	PROJECT NO.	SECTION NO.	SHEET NO.
ND	SOIB-7-058(013)000	77	1

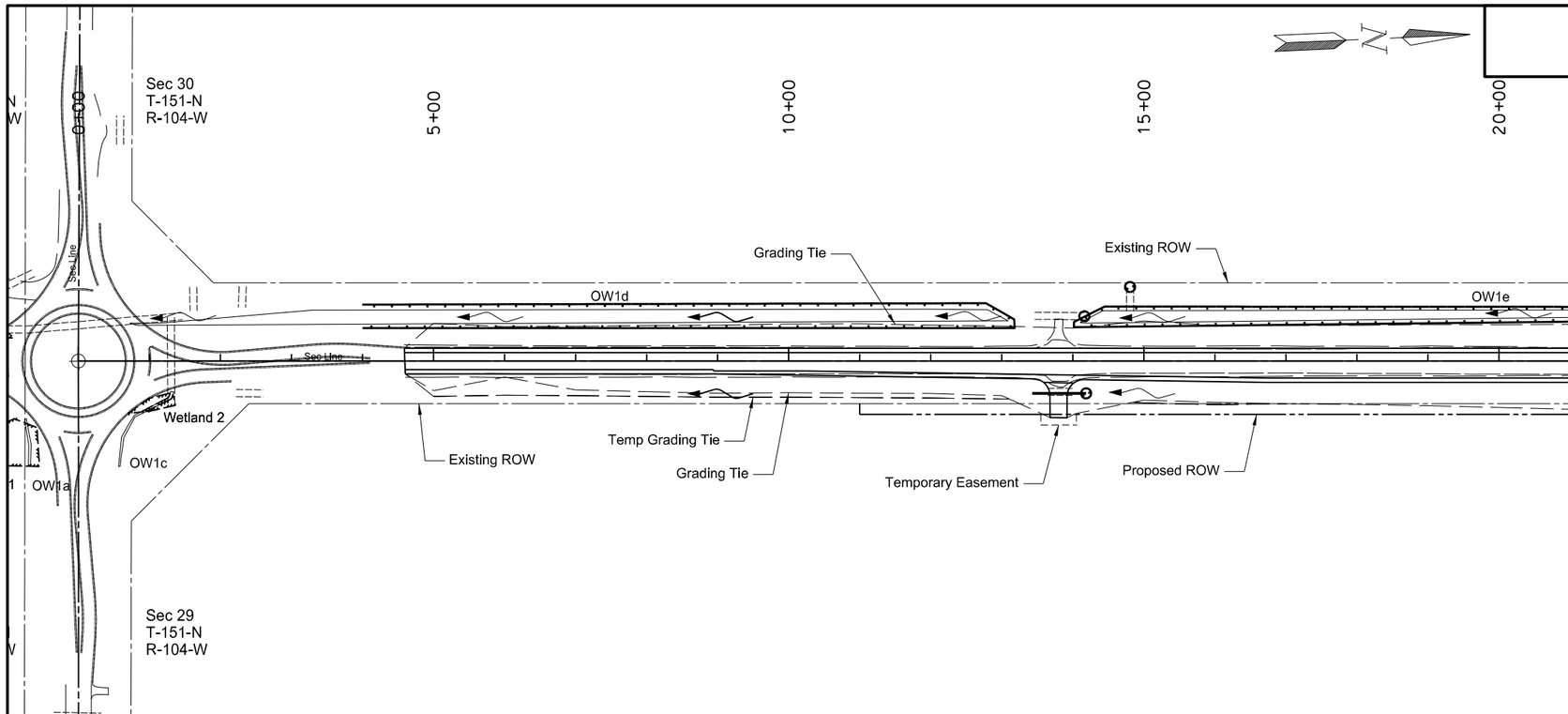

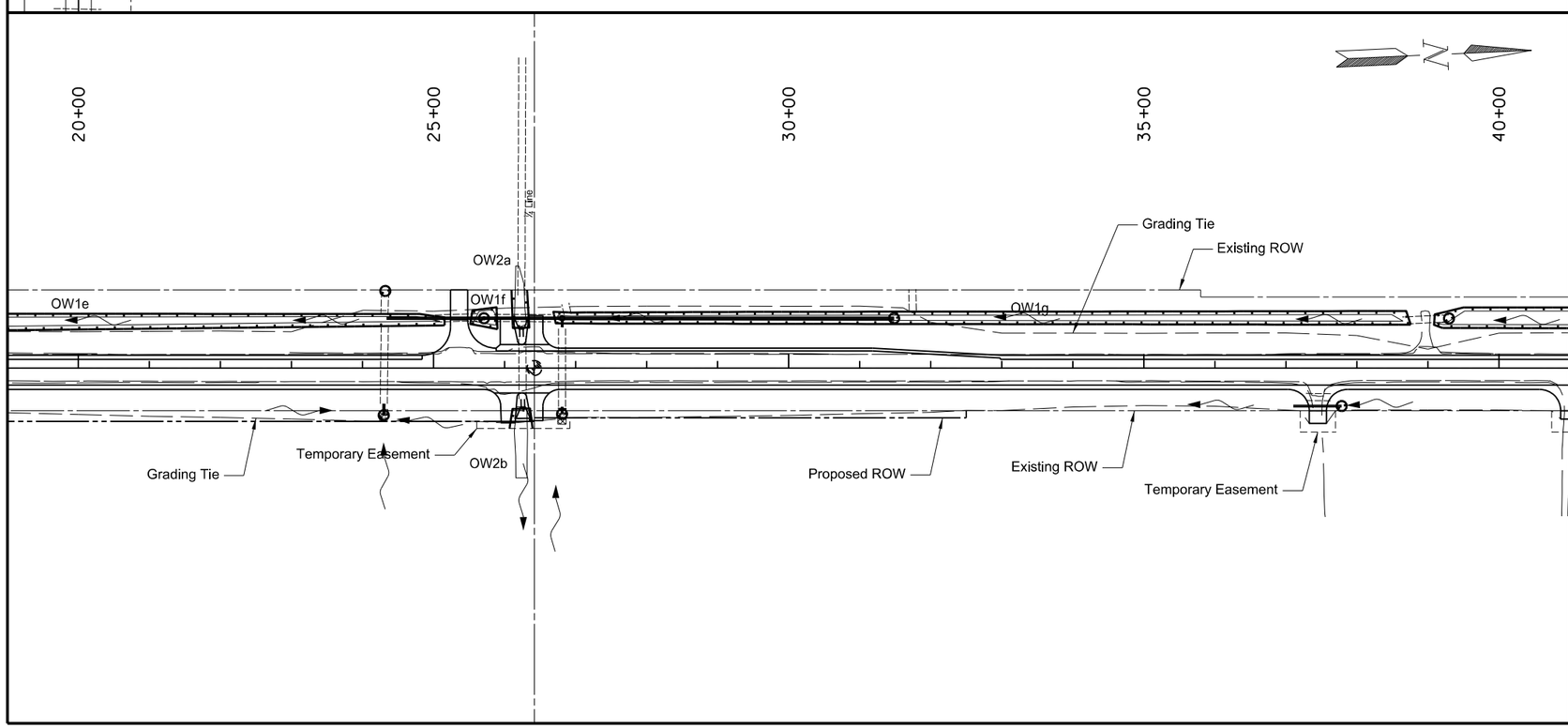

SPEC	CODE	BID ITEM	QUANTITY	UNIT
255	0103	ECB TYPE 3		
		24+30 - Rt	20	SY
		26+81 - Rt	20	SY
261	0112	FIBER ROLLS 12IN		
		4+00 LT to 13+18 LT (Wetland Area)	1855	LF
		14+01 LT to 25+16 LT (Wetland Area)	2250	LF
		14+16 LT (Culvert Inlet)	30	LF
		14+19 RT (Culvert Inlet)	30	LF
		14+81 LT (Culvert Inlet)	30	LF
		24+32 LT (Culvert Inlet)	30	LF
		24+30 RT (Culvert Inlet)	30	LF
		25+52 LT to 25+90 LT (Wetland Area)	125	LF
		25+71 LT (Culvert Inlet)	30	LF
		26+10 LT to 26+35 LT (Wetland Area)	130	LF
		26+07 RT to 26+39 RT (Wetland Area)	80	LF
		26+69 LT to 38+76 LT (Wetland Area)	2440	LF
		26+81 RT (Culvert Inlet)	30	LF
		31+48 LT (Culvert Inlet)	30	LF
		37+78 RT (Culvert Inlet)	30	LF

Fiber Rolls

ECB Type 3

Riprap

Wetland Seeding

This document was originally issued and sealed by William Doerr, Registration Number PE- 7113, on 12/04/15 and the original document is stored at the North Dakota Department of Transportation

Permanent Sediment & Erosion Control

ND 58

Jct 200 to Jct 1804

STATE	PROJECT NO.	SECTION NO.	SHEET NO.
ND	SOIB-7-058(013)000	77	2

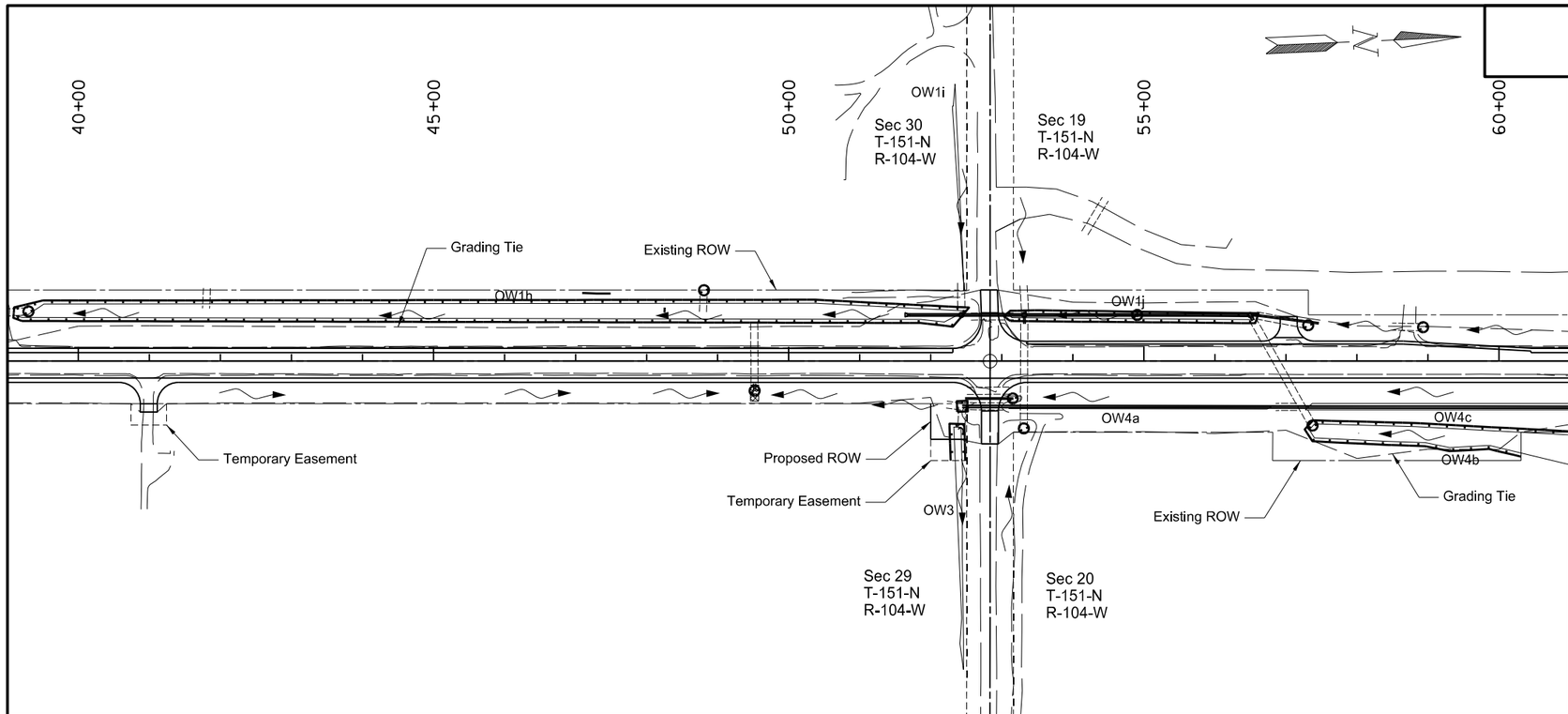

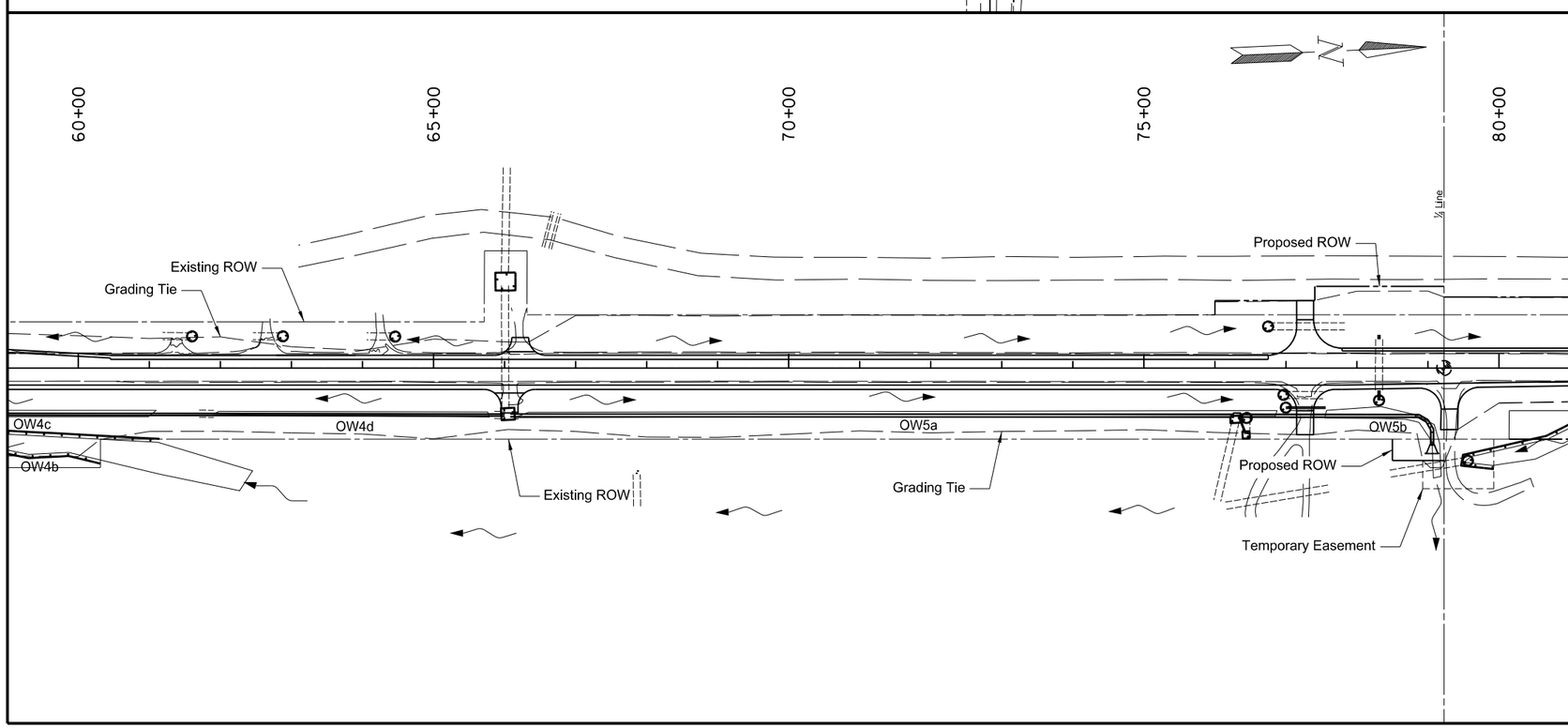

SPEC	CODE	BID ITEM	QUANTITY	UNIT
255	0103	ECB TYPE 3		
		49+52 - Rt	24	SY
261	0112	FIBER ROLLS 12IN		
		39+09 LT to 52+54 LT (Wetland Area)	2720	LF
		39+30 LT (Culvert Inlet)	30	LF
		48+81 LT (Culvert Inlet)	30	LF
		49+52 RT (Culvert Inlet)	30	LF
		52+26 RT to 52+49 RT (Wetland Area)	125	LF
		52+37 RT to 52+52 RT (Wetland Area)	60	LF
		53+03 LT to 56+62 LT (Wetland Area)	730	LF
		53+15 RT (Culvert Inlet)	30	LF
		53+31 RT (Culvert Inlet)	30	LF
		54+91 LT (Area Inlet)	30	LF
		57+27 RT to 61+13 RT (Wetland Area)	710	LF
		57+31 LT (Culvert Inlet)	30	LF
		57+37 RT (Culvert Inlet)	30	LF
		58+93 LT (Culvert Inlet)	30	LF
		61+60 LT (Culvert Inlet)	30	LF
		62+88 LT (Culvert Inlet)	30	LF
		64+46 LT (Culvert Inlet)	30	LF
		65+87 LT to 66+15 LT (Wetland Area)	105	LF
		65+95 RT to 66+14 RT (Wetland Area)	70	LF
		76+22 RT to 76+37 RT (Wetland Area)	50	LF
		76+39 RT to 76+49 RT (Wetland Area)	40	LF
		76+45 RT (Culvert Inlet)	30	LF
		76+75 LT (Culvert Inlet)	30	LF
		76+97 RT (Culvert Inlet)	30	LF
		77+00 RT (Culvert Inlet)	30	LF
		78+31 RT (Culvert Inlet)	30	LF
		79+47 RT to 80+00 RT (Wetland Area)	115	LF
		79+56 RT (Culvert Inlet)	30	LF

Fiber Rolls

ECB Type 3

Riprap

Wetland Seeding

This document was originally issued and sealed by William Doerr, Registration Number PE- 7113, on 12/04/15 and the original document is stored at the North Dakota Department of Transportation

Permanent Sediment & Erosion Control

ND 58

Jct 200 to Jct 1804

STATE	PROJECT NO.	SECTION NO.	SHEET NO.
ND	SOIB-7-058(013)000	77	3

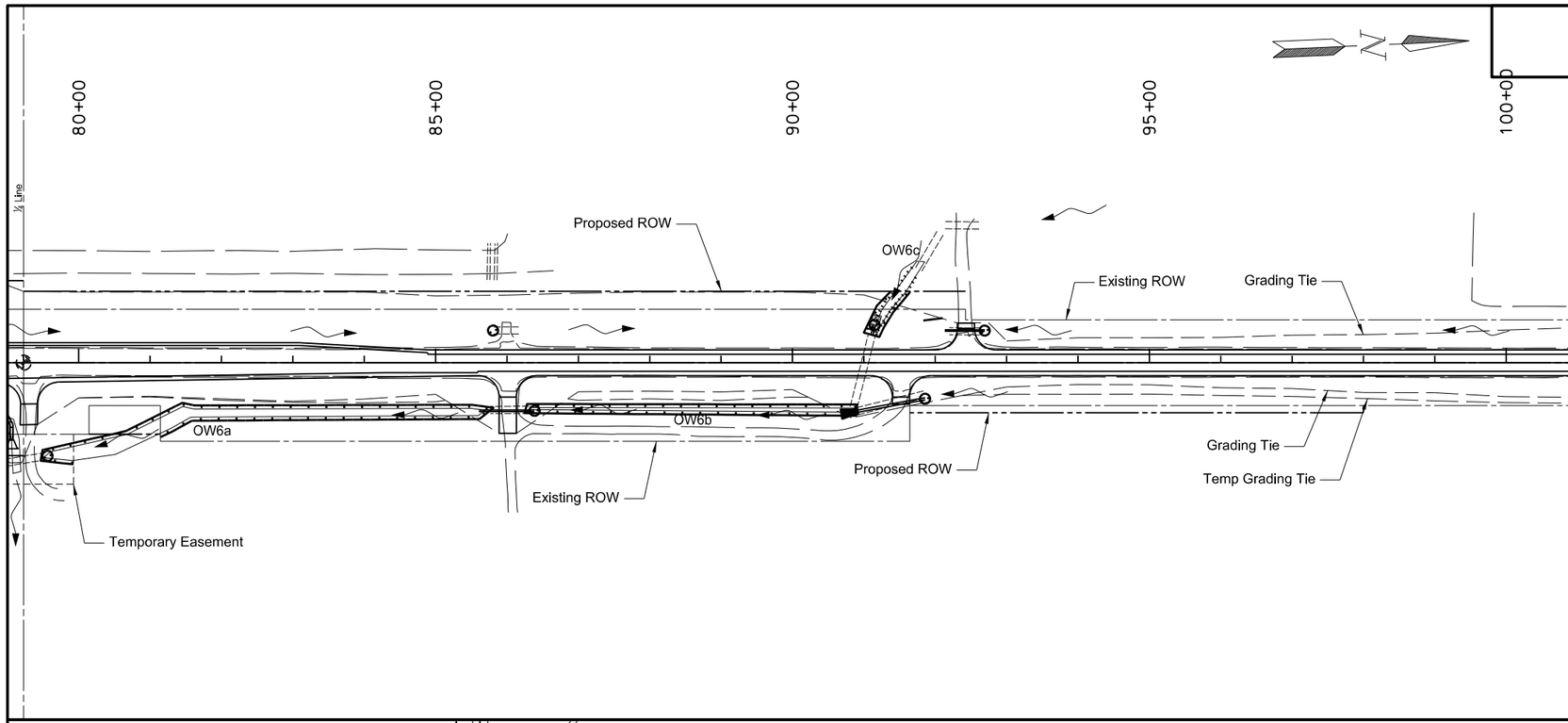

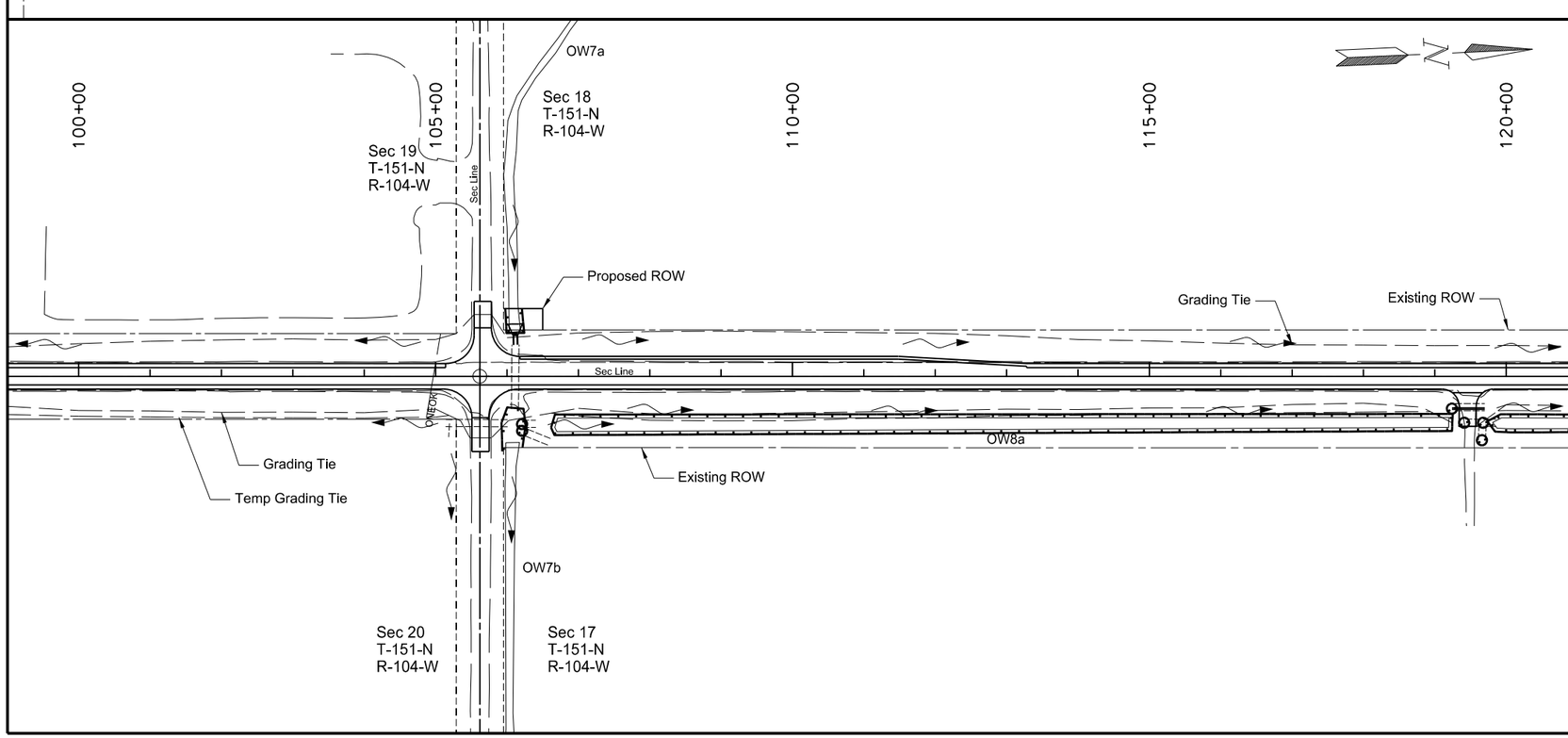

SPEC	CODE	BID ITEM	QUANTITY	UNIT
255	0103	ECB TYPE 3		
		90+99 - LT	24	SY
256	0200	RIPRAP GRADE II		
		90+99 - RT	22	CY
261	0112	FIBER ROLLS 12IN		
		80+00 RT to 85+81 RT (Wetland Area)	1070	LF
		85+80 LT (Culvert Inlet)	30	LF
		86+24 RT to 90+90 RT (Wetland Area)	955	LF
		86+38 RT (Culvert Inlet)	30	LF
		91+00 LT to 91+65 LT (Wetland Area)	170	LF
		91+15 LT (Culvert Inlet)	30	LF
		91+86 RT (Culvert Inlet)	30	LF
		92+69 LT (Culvert Inlet)	30	LF
		105+92 RT to 106+26 RT (Wetland Area)	140	LF
		105+98 LT to 106+24 LT (Wetland Area)	95	LF
		106+21 RT (Culvert Inlet)	30	LF
		106+22 RT (Culvert Inlet)	30	LF
		106+62 RT to 119+25 RT (Wetland Area)	2570	LF
		119+24 RT (Culvert Inlet)	30	LF
		119+41 RT (Culvert Inlet)	30	LF
		119+66 RT (Culvert Inlet)	30	LF
		119+68 RT (Culvert Inlet)	30	LF
		119+73 RT to 120+00 RT (Wetland Area)	65	LF

Fiber Rolls
ECB Type 3
Riprap
Wetland Seeding

This document was originally issued and sealed by William Doerr, Registration Number PE- 7113, on 12/04/15 and the original document is stored at the North Dakota Department of Transportation

Permanent Sediment & Erosion Control

ND 58

Jct 200 to Jct 1804

STATE	PROJECT NO.	SECTION NO.	SHEET NO.
ND	SOIB-7-058(013)000	77	4

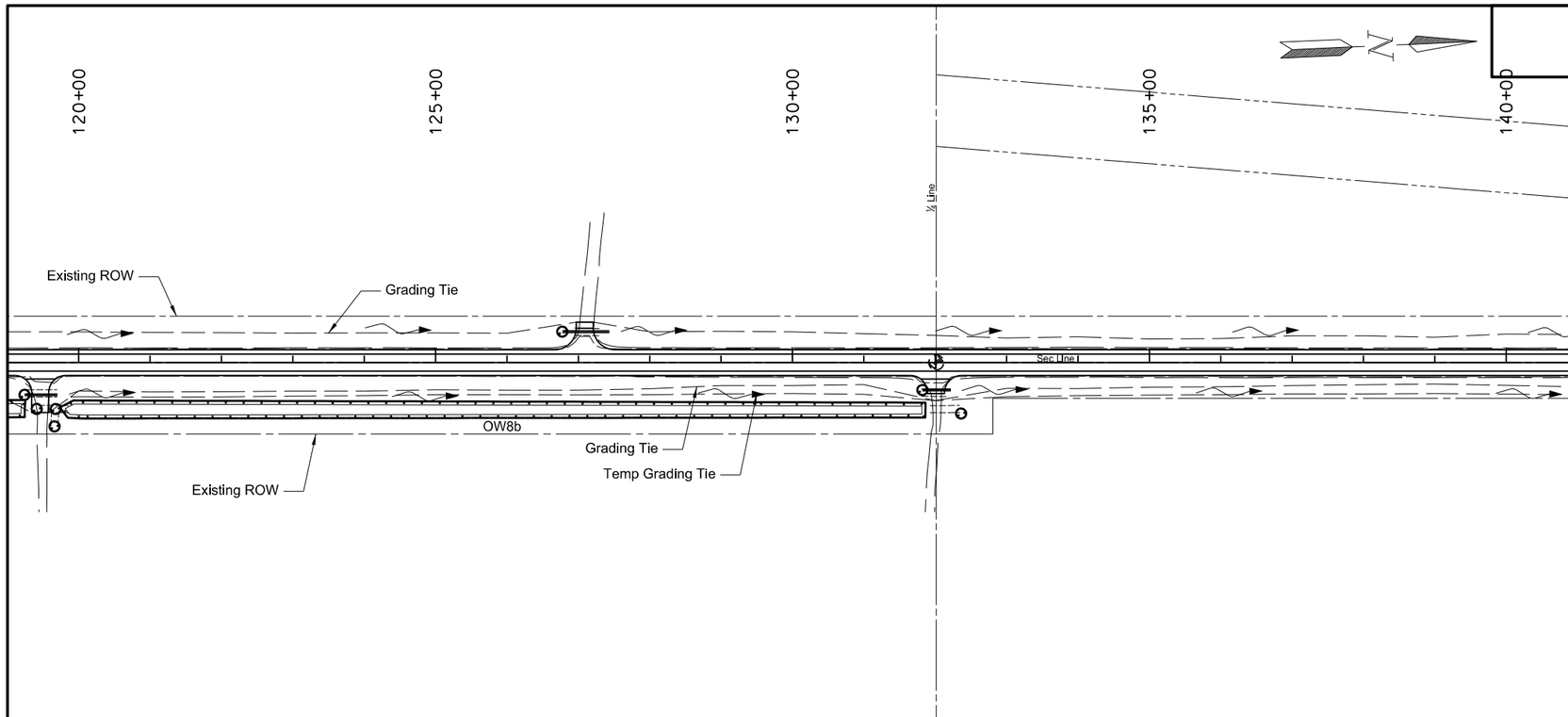

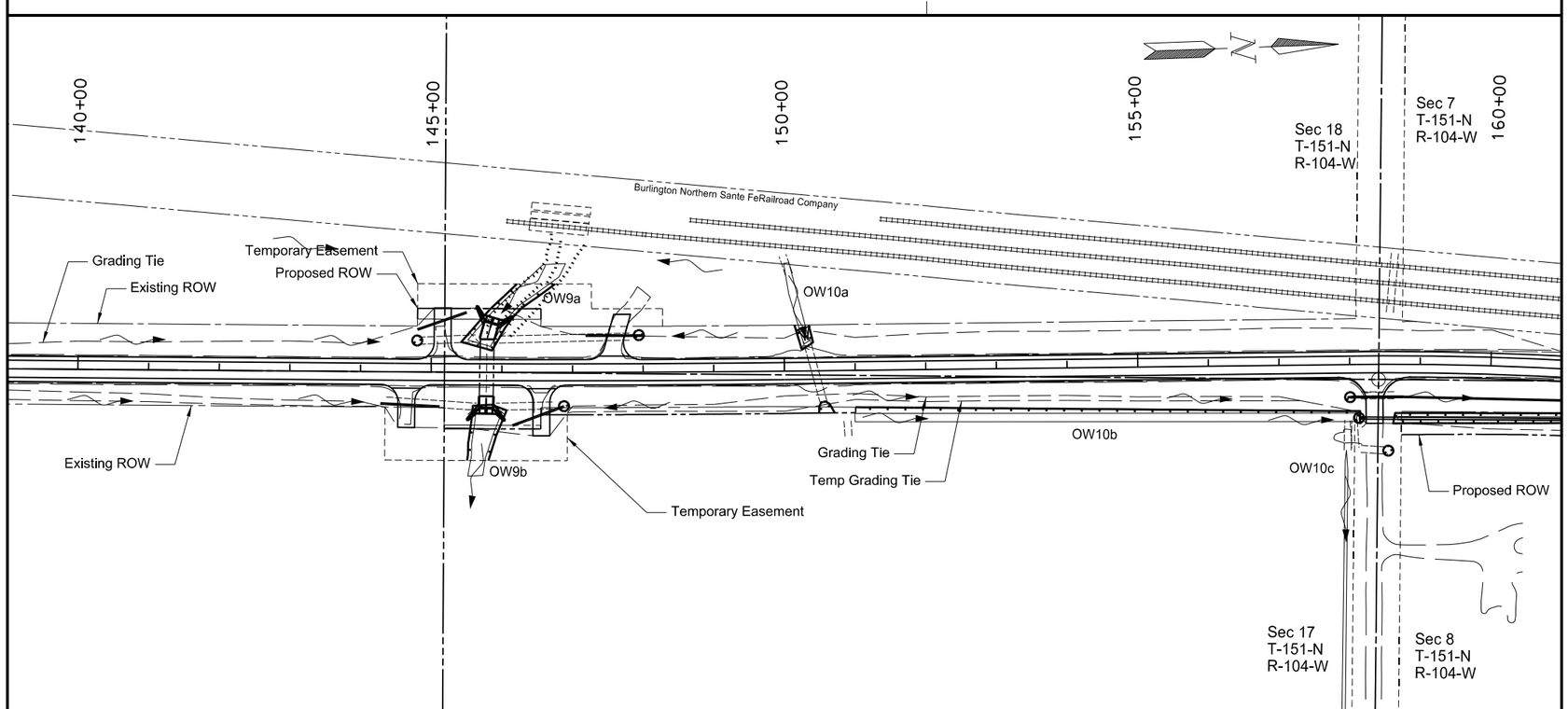

SPEC	CODE	BID ITEM	QUANTITY	UNIT
261	0112	FIBER ROLLS 12IN		
		120+00 RT to 131+86 RT (Wetland Area)	2395	LF
		126+77 LT (Culvert Inlet)	30	LF
		131+82 RT (Culvert Inlet)	30	LF
		132+36 RT (Culvert Inlet)	30	LF
		144+80 LT (Culvert Inlet)	30	LF
		145+42 LT to 146+75 LT (Wetland Area)	290	LF
		145+51 RT to 146+07 RT (Wetland Area)	200	LF
		146+88 RT (Culvert Inlet)	30	LF
		147+94 LT (Culvert Inlet)	30	LF
		150+15 LT to 150+41 LT (Wetland Area)	80	LF
		150+48 RT to 150+71 RT (Wetland Area)	45	LF
		151+00 RT to 158+14 RT (Wetland Area)	735	LF
		158+00 RT (Culvert Inlet)	30	LF
		158+13 RT (Culvert Inlet)	30	LF
		158+55 RT (Culvert Inlet)	30	LF
		158+62 RT to 160+00 RT (Wetland Area)	285	LF

Fiber Rolls

ECB Type 3

Riprap

Wetland Seeding

This document was originally issued and sealed by William Doerr, Registration Number PE- 7113, on 12/04/15 and the original document is stored at the North Dakota Department of Transportation

Permanent Sediment & Erosion Control

ND 58

Jct 200 to Jct 1804

STATE	PROJECT NO.	SECTION NO.	SHEET NO.
ND	SOIB-7-058(013)000	77	5

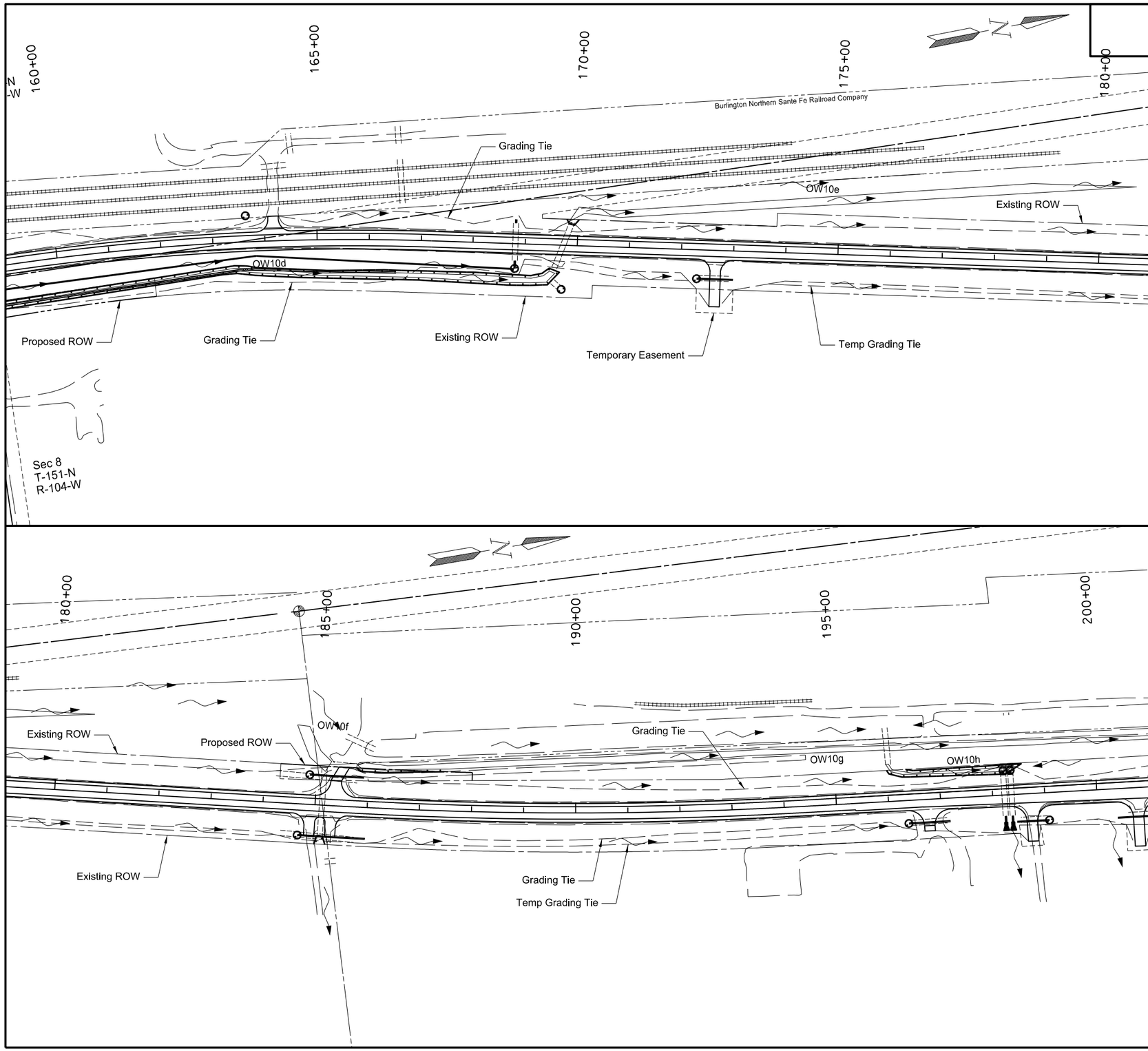

SPEC	CODE	BID ITEM	QUANTITY	UNIT
255	0103	ECB TYPE 3		
		198+23 - LT	20	SY
		198+37 - LT	20	SY
256	0200	RIPRAP GRADE II		
		198+23 - RT	10	CY
		198+37 - RT	10	CY
261	0112	FIBER ROLLS 12IN		
		160+00 RT to 169+67 RT (Wetland Area)	1930	LF
		163+65 LT (Culvert Inlet)	30	LF
		168+81 RT (Culvert Inlet)	30	LF
		169+72 RT (Culvert Inlet)	30	LF
		169+79 LT to 170+02 LT (Wetland Area)	35	LF
		172+30 RT (Culvert Inlet)	30	LF
		184+69 RT (Culvert Inlet)	30	LF
		184+87 LT (Culvert Inlet)	30	LF
		185+02 RT to 185+23 RT (Wetland Area)	45	LF
		185+76 LT to 187+45 LT (Wetland Area)	170	LF
		196+00 LT to 198+58 LT (Wetland Area)	490	LF
		196+37 RT (Culvert Inlet)	30	LF
		198+23 LT (Culvert Inlet)	30	LF
		198+37 LT (Culvert Inlet)	30	LF
		199+06 RT (Culvert Inlet)	30	LF

Fiber Rolls

ECB Type 3

Riprap

Wetland Seeding

This document was originally issued and sealed by William Doerr, Registration Number PE- 7113, on 12/04/15 and the original document is stored at the North Dakota Department of Transportation

Permanent Sediment & Erosion Control

ND 58

Jct 200 to Jct 1804

STATE	PROJECT NO.	SECTION NO.	SHEET NO.
ND	SOIB-7-058(013)000	77	6

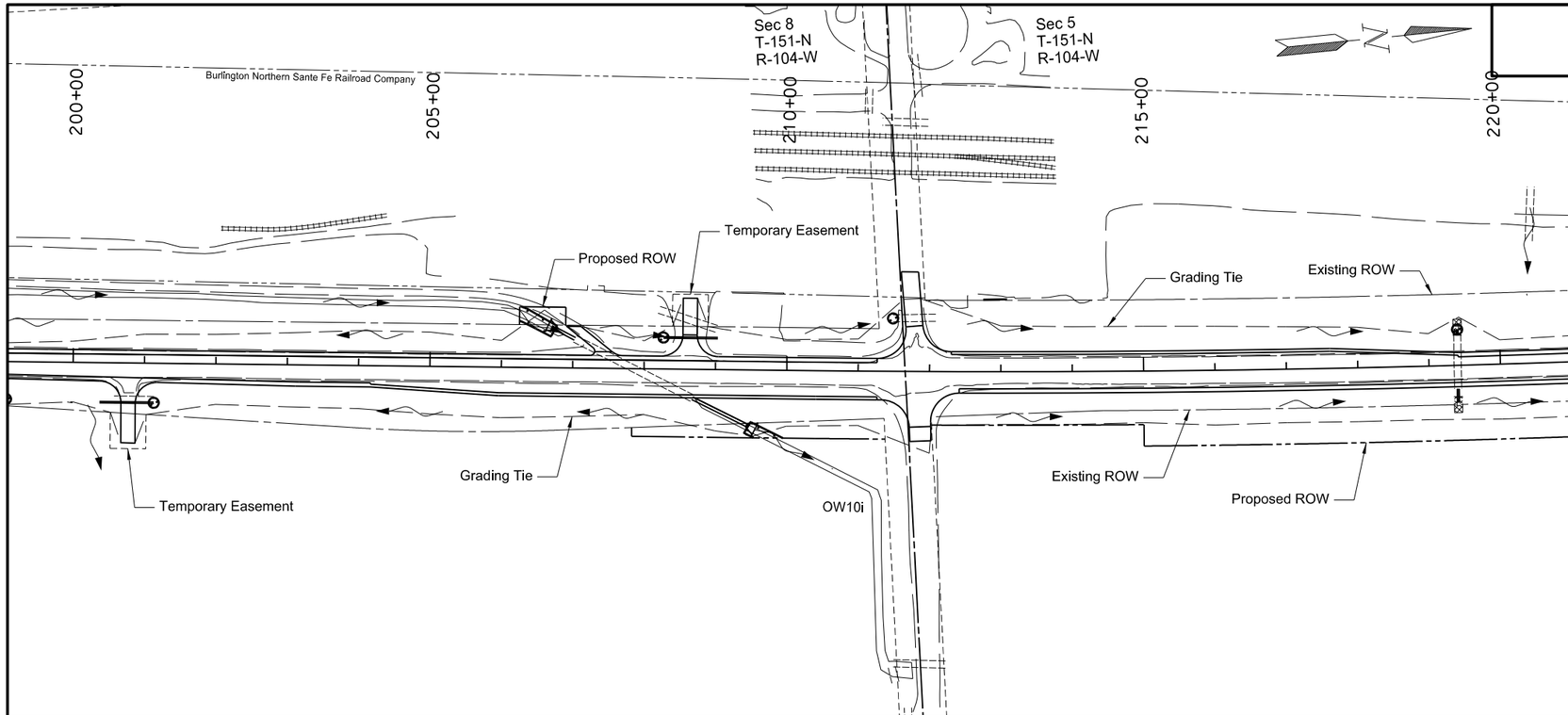

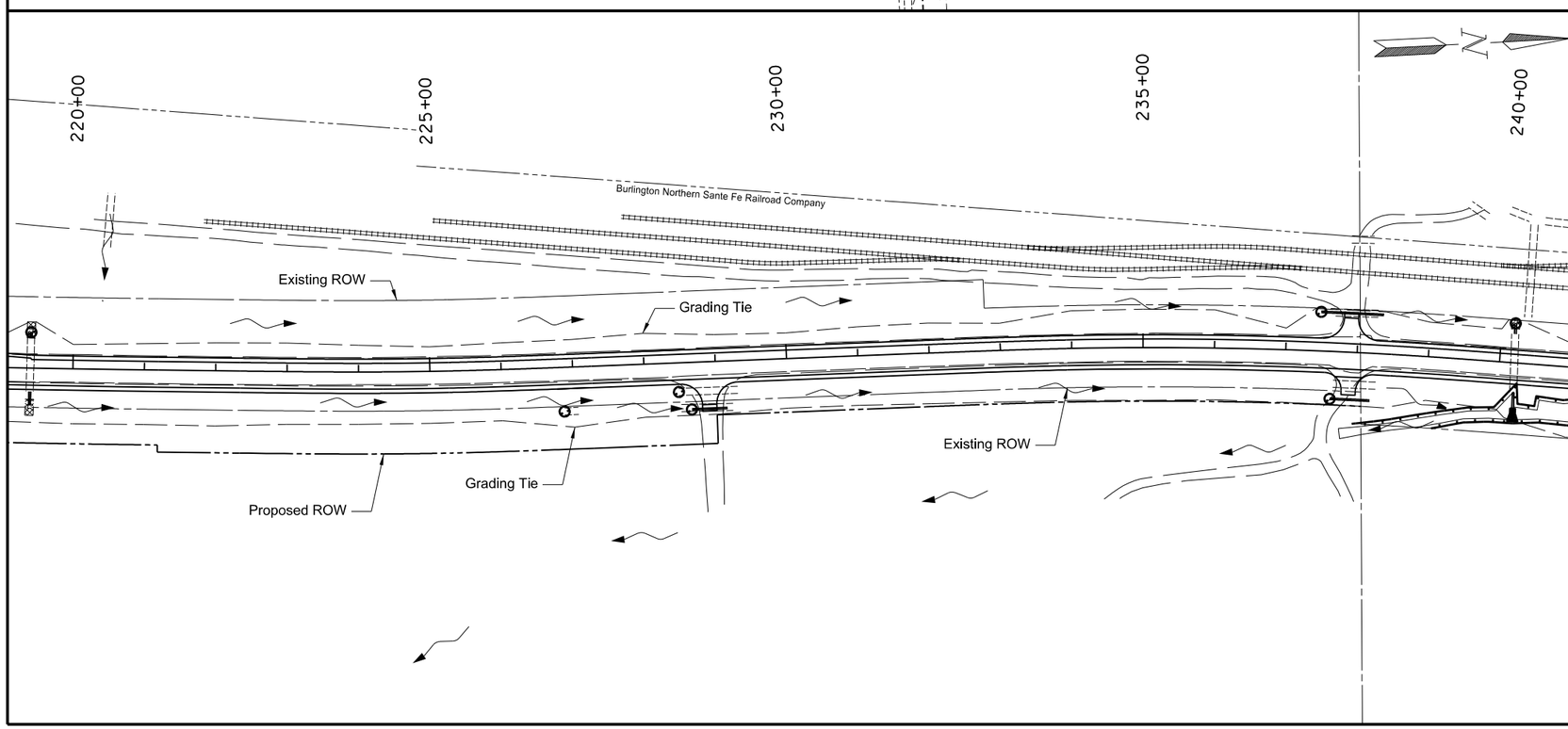

SPEC	CODE	BID ITEM	QUANTITY	UNIT
255	0103	ECB TYPE 3		
		219+40 - LT & RT	48	SY
		240+21 - LT	22	SY
256	0200	RIPRAP GRADE II		
		240+21 - RT	16	CY
261	0112	FIBER ROLLS 12IN		
		201+14 RT (Culvert Inlet)	30	LF
		206+25 LT to 206+77 LT (Wetland Area)	125	LF
		208+27 LT (Culvert Inlet)	30	LF
		209+41 RT to 209+96 RT (Wetland Area)	85	LF
		211+48 LT (Culvert Inlet)	30	LF
		219+41 LT (Culvert Inlet)	30	LF
		226+87 RT (Culvert Inlet)	30	LF
		228+48 RT (Culvert Inlet)	30	LF
		228+65 RT (Culvert Inlet)	30	LF
		237+48 LT (Culvert Inlet)	30	LF
		237+64 RT (Culvert Inlet)	30	LF
		237+97 RT to 240+00 RT (Wetland Area)	205	LF
		239+10 RT to 240+00 RT (Wetland Area)	90	LF
		240+21 LT (Culvert Inlet)	30	LF

Fiber Rolls

ECB Type 3

Riprap

Wetland Seeding

This document was originally issued and sealed by William Doerr, Registration Number PE- 7113, on 12/04/15 and the original document is stored at the North Dakota Department of Transportation

Permanent Sediment & Erosion Control

ND 58

Jct 200 to Jct 1804

STATE	PROJECT NO.	SECTION NO.	SHEET NO.
ND	SOIB-7-058(013)000	77	7

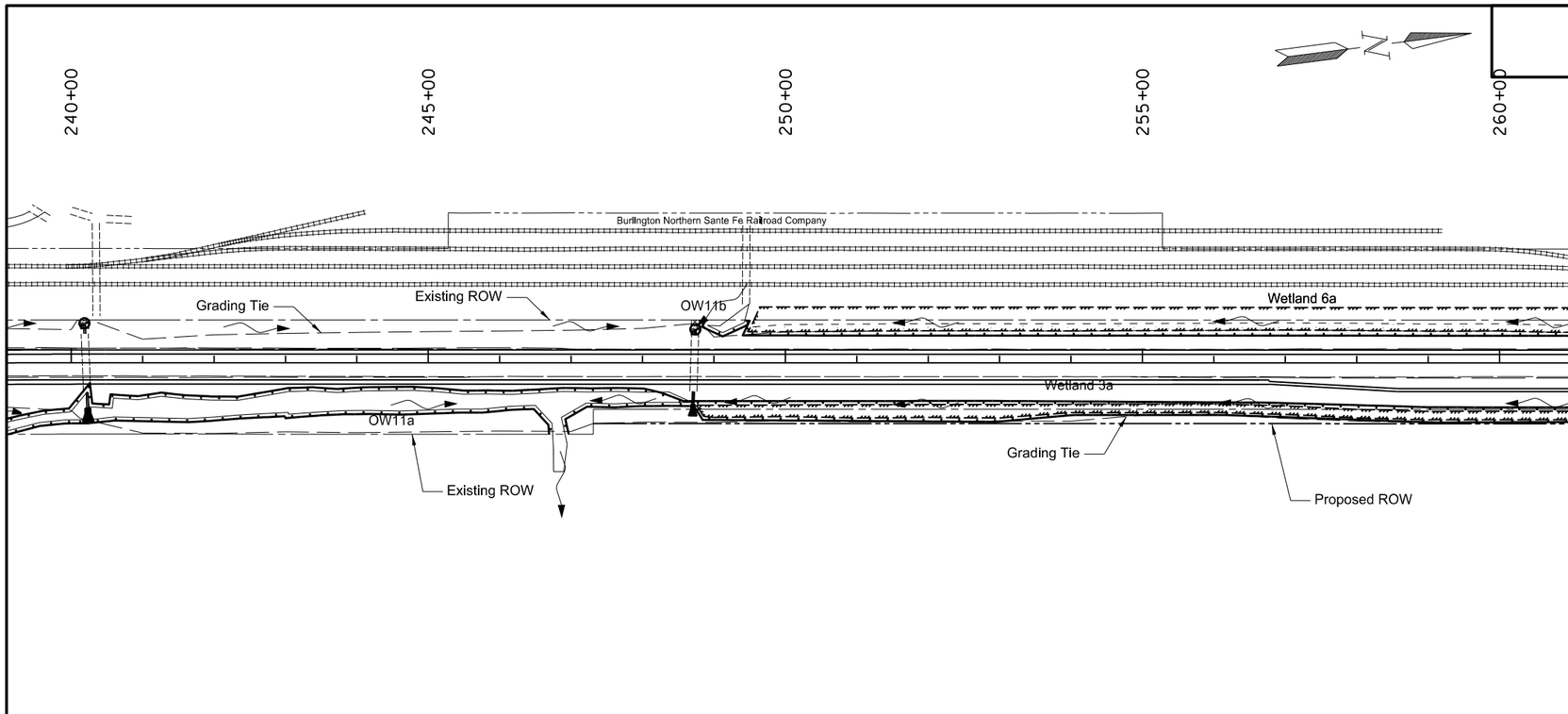

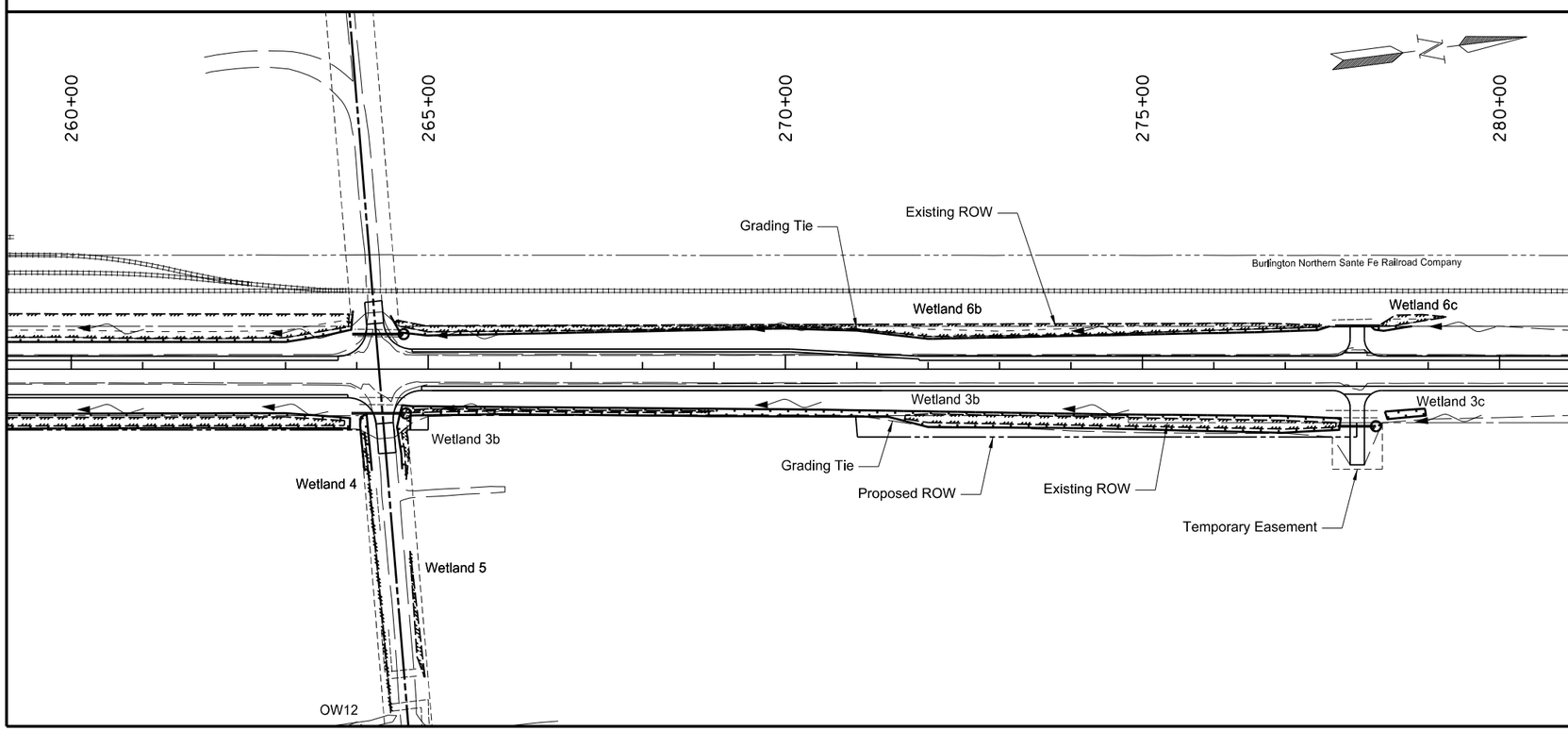

SPEC	CODE	BID ITEM	QUANTITY	UNIT
255	0103	ECB TYPE 3		
		248+73 - LT	20	SY
256	0200	RIPRAP GRADE II		
		248+73 - RT	10	CY
261	0112	FIBER ROLLS 12IN		
		240+00 RT to 263+90 RT (Wetland Area)	4200	LF
		240+00 RT to 246+69 RT (Wetland Area)	695	LF
		248+73 LT (Culvert Inlet)	30	LF
		248+83 LT to 249+49 LT (Wetland Area)	90	LF
		249+40 LT to 263+94 LT (Wetland Area)	1505	LF
		264+05 RT to 264+21 RT (Wetland Area)	165	LF
		264+47 LT to 277+62 LT (Wetland Area)	1330	LF
		264+56 RT to 277+78 RT (Wetland Area)	2745	LF
		264+65 LT (Culvert Inlet)	30	LF
		264+68 RT (Culvert Inlet)	30	LF
		278+20 LT to 278+78 LT (Wetland Area)	60	LF
		278+27 RT (Culvert Inlet)	30	LF
		278+40 RT to 278+97 RT (Wetland Area)	130	LF

Fiber Rolls

ECB Type 3

Riprap

Wetland Seeding

This document was originally issued and sealed by William Doerr, Registration Number PE- 7113, on 12/04/15 and the original document is stored at the North Dakota Department of Transportation

Permanent Sediment & Erosion Control

ND 58

Jct 200 to Jct 1804

STATE	PROJECT NO.	SECTION NO.	SHEET NO.
ND	SOIB-7-058(013)000	77	8

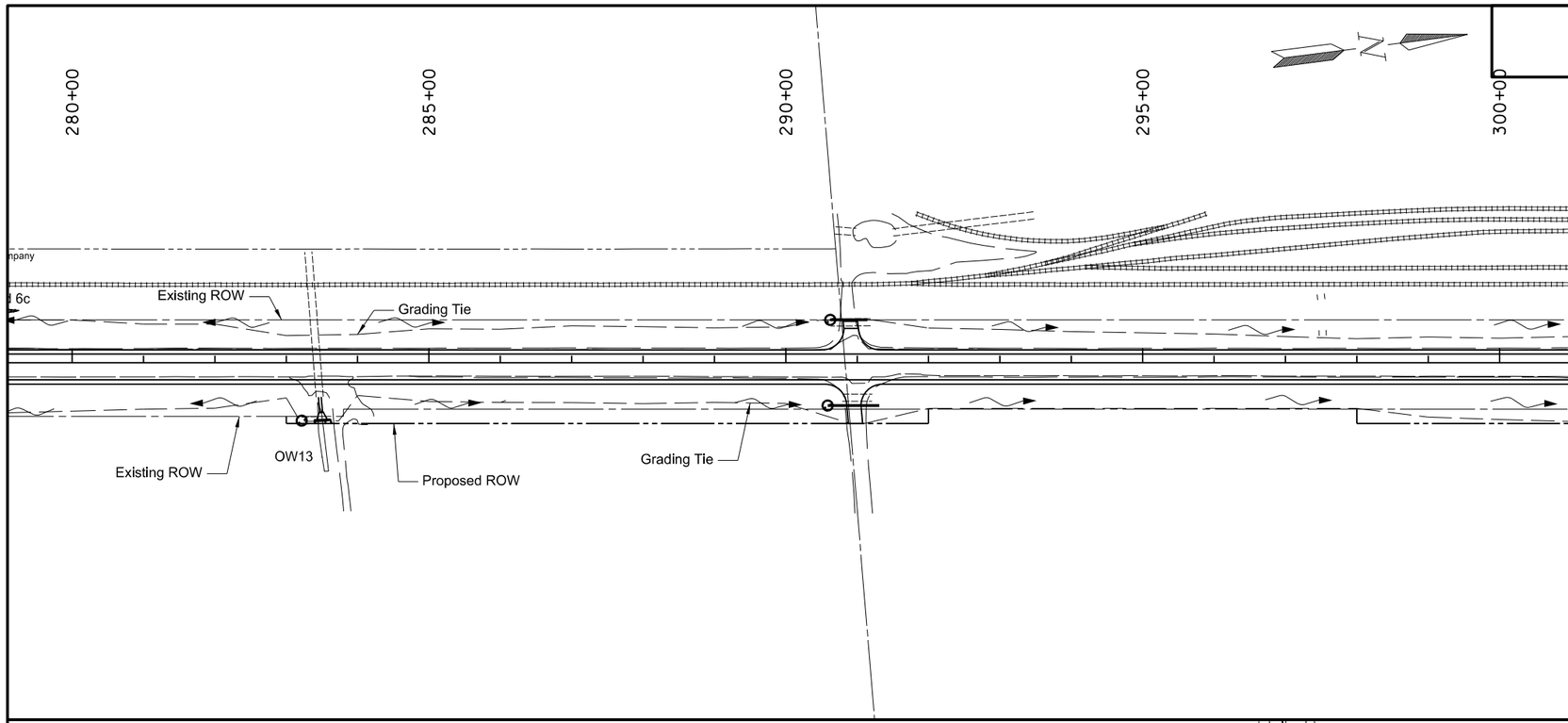

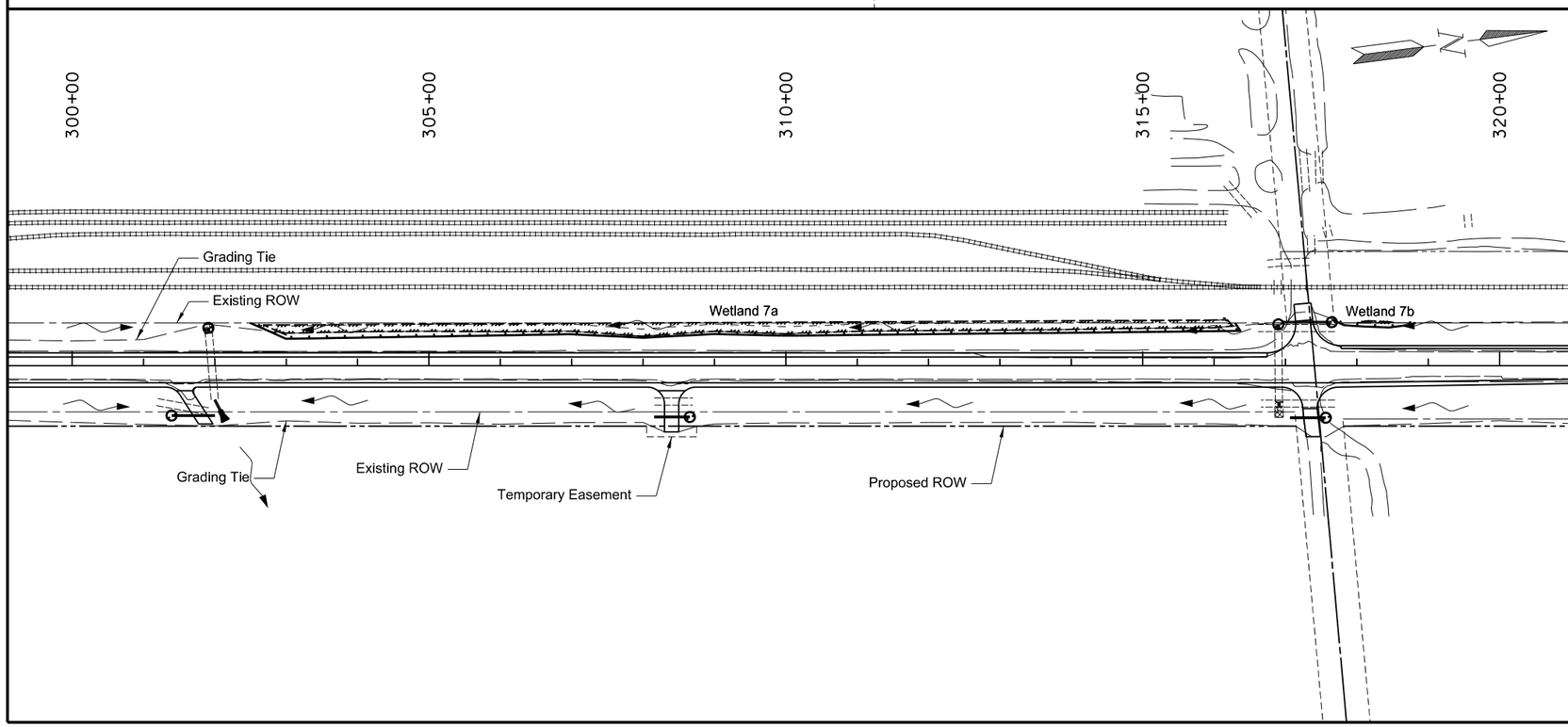

SPEC	CODE	BID ITEM	QUANTITY	UNIT
255	0103	ECB TYPE 3		
		301+96 - LT	20	SY
		316+91 - RT	20	SY
256	0200	RIPRAP GRADE II		
		301+96 - RT	10	CY
261	0112	FIBER ROLLS 12IN		
		283+22 RT (Culvert Inlet)	30	LF
		283+40 RT to 283+64 RT (Wetland Area)	30	LF
		290+59 RT (Culvert Inlet)	30	LF
		290+62 LT (Culvert Inlet)	30	LF
		301+39 RT (Culvert Inlet)	30	LF
		301+96 LT (Culvert Inlet)	30	LF
		302+49 LT to 316+37 LT (Wetland Area)	1405	LF
		308+65 RT (Culvert Inlet)	30	LF
		316+91 LT (Culvert Inlet)	30	LF
		317+65 LT to 318+83 LT (Wetland Area)	120	LF
		317+56 RT (Culvert Inlet)	30	LF
		317+65 LT (Culvert Inlet)	30	LF

Fiber Rolls

ECB Type 3

Riprap

Wetland Seeding

This document was originally issued and sealed by William Doerr, Registration Number PE- 7113, on 12/04/15 and the original document is stored at the North Dakota Department of Transportation

Permanent Sediment & Erosion Control

ND 58

Jct 200 to Jct 1804

STATE	PROJECT NO.	SECTION NO.	SHEET NO.
ND	SOIB-7-058(013)000	77	9

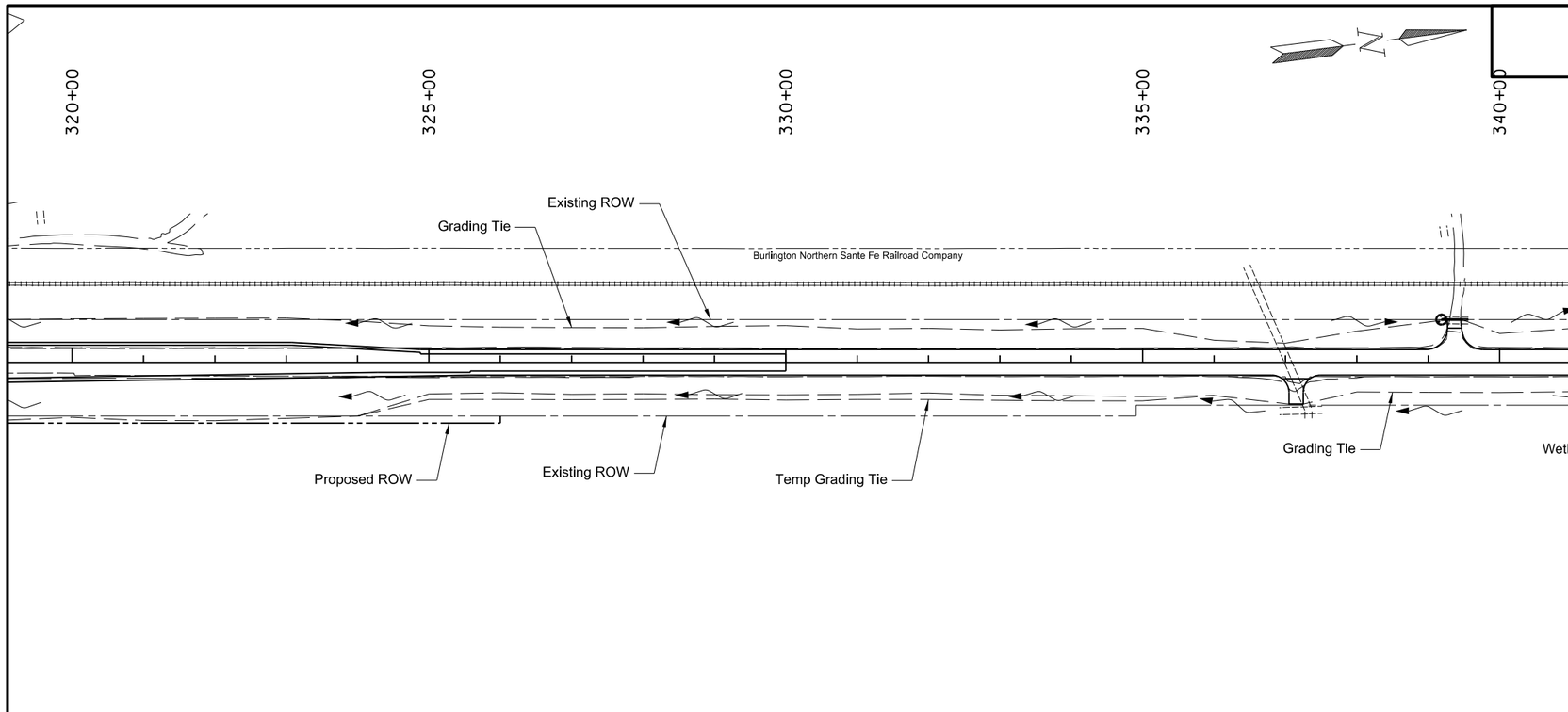

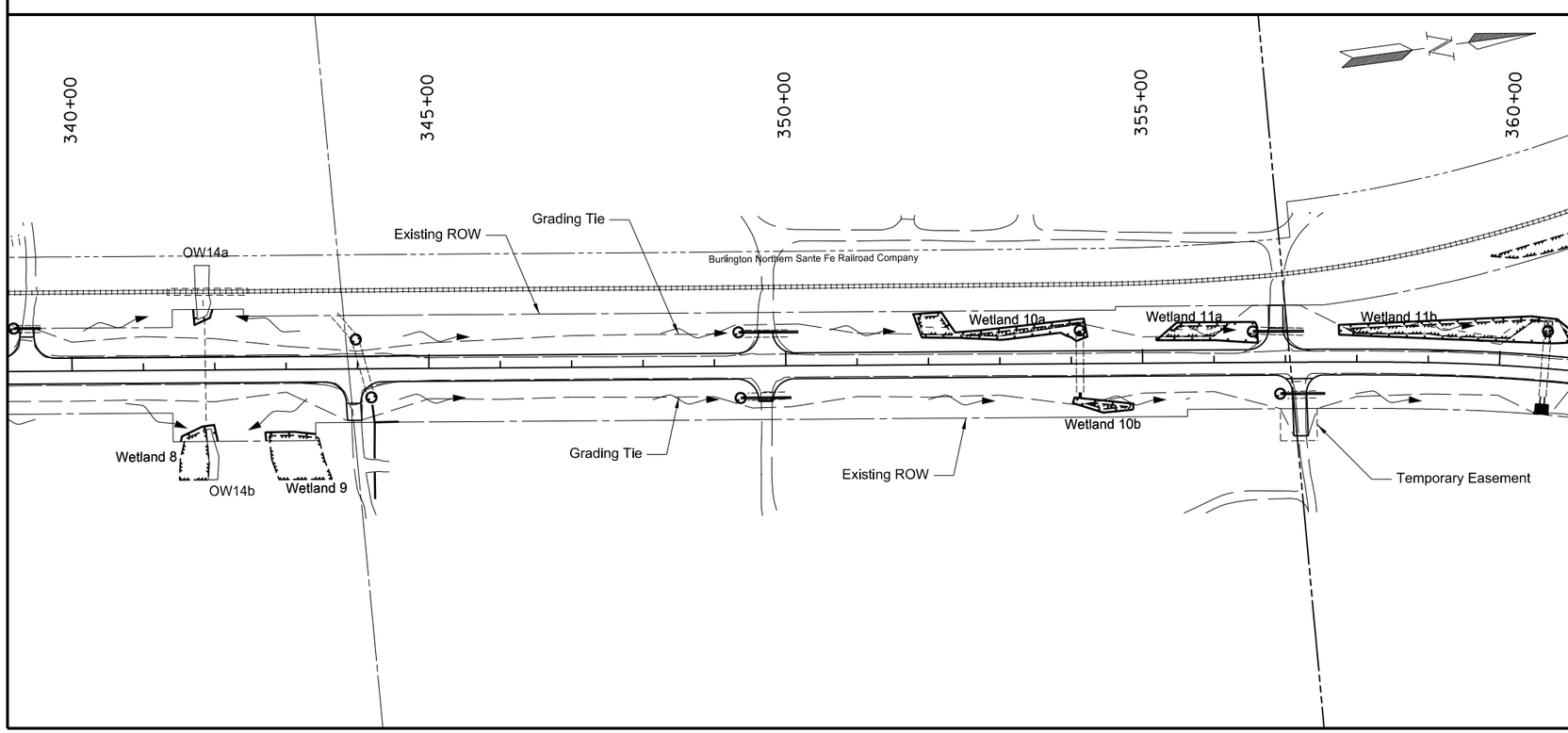

SPEC	CODE	BID ITEM	QUANTITY	UNIT
255	0103	ECB TYPE 3		
		360+64 - LT	31	SY
256	0200	RIPRAP GRADE II		
		360+64 - RT	15	CY
261	0112	FIBER ROLLS 12IN		
		339+18 LT (Culvert Inlet)	30	LF
		341+52 RT to 342+04 RT (Wetland Area)	80	LF
		341+70 LT to 341+97 LT (Wetland Area)	60	LF
		342+70 RT to 343+41 RT (Wetland Area)	85	LF
		343+98 LT (Culvert Inlet)	30	LF
		344+19 RT (Culvert Inlet)	30	LF
		349+34 LT (Culvert Inlet)	30	LF
		349+36 RT (Culvert Inlet)	30	LF
		351+79 LT to 354+23 LT (Wetland Area)	550	LF
		354+02 RT to 354+87 RT (Wetland Area)	185	LF
		354+12 LT (Culvert Inlet)	30	LF
		355+20 LT to 356+62 LT (Wetland Area)	320	LF
		356+55 LT (Culvert Inlet)	30	LF
		356+92 RT (Culvert Inlet)	30	LF
		357+75 LT to 361+15 LT (Wetland Area)	470	LF
		360+64 LT (Culvert Inlet)	30	LF

Fiber Rolls

ECB Type 3

Riprap

Wetland Seeding

This document was originally issued and sealed by William Doerr, Registration Number PE- 7113, on 12/04/15 and the original document is stored at the North Dakota Department of Transportation

Permanent Sediment & Erosion Control

ND 58

Jct 200 to Jct 1804

STATE	PROJECT NO.	SECTION NO.	SHEET NO.
ND	SOIB-7-058(013)000	77	10

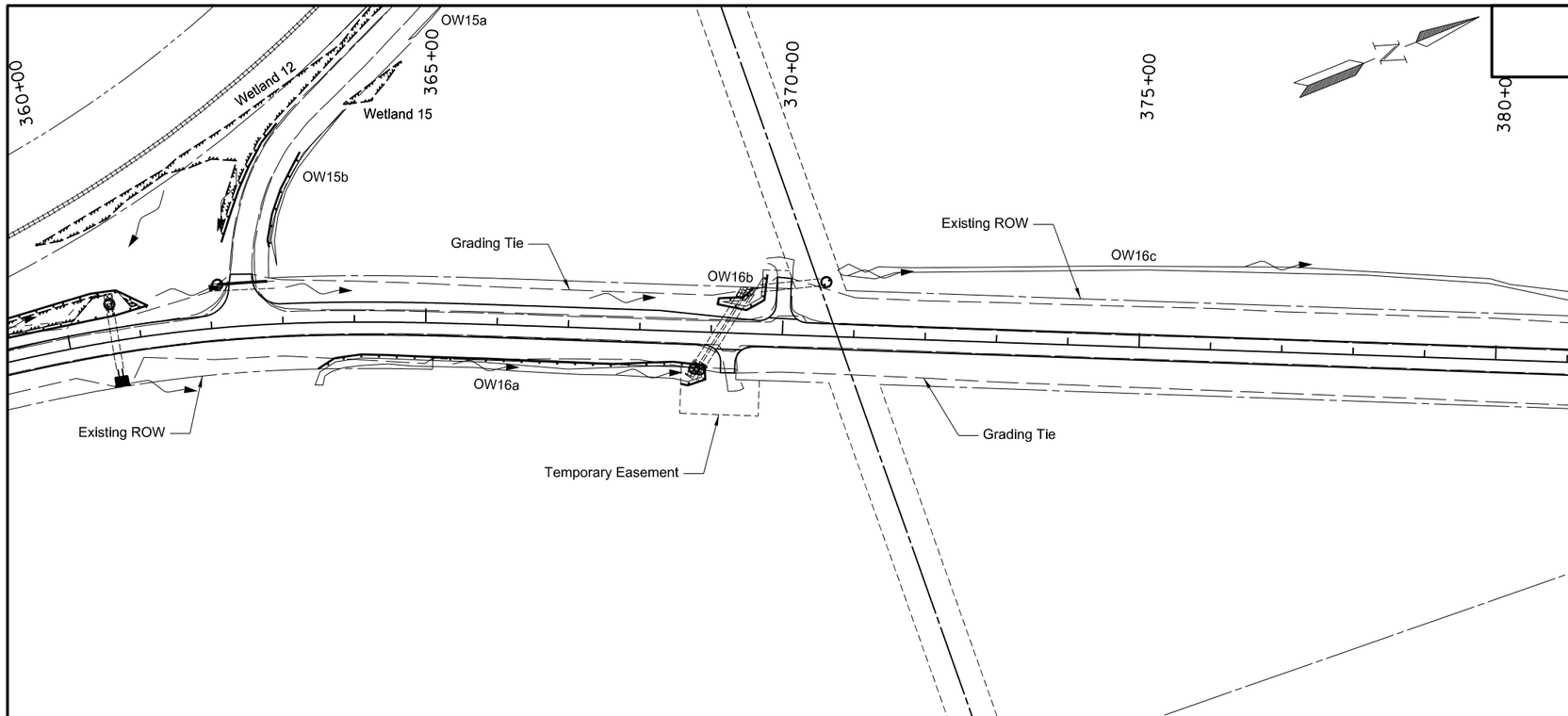

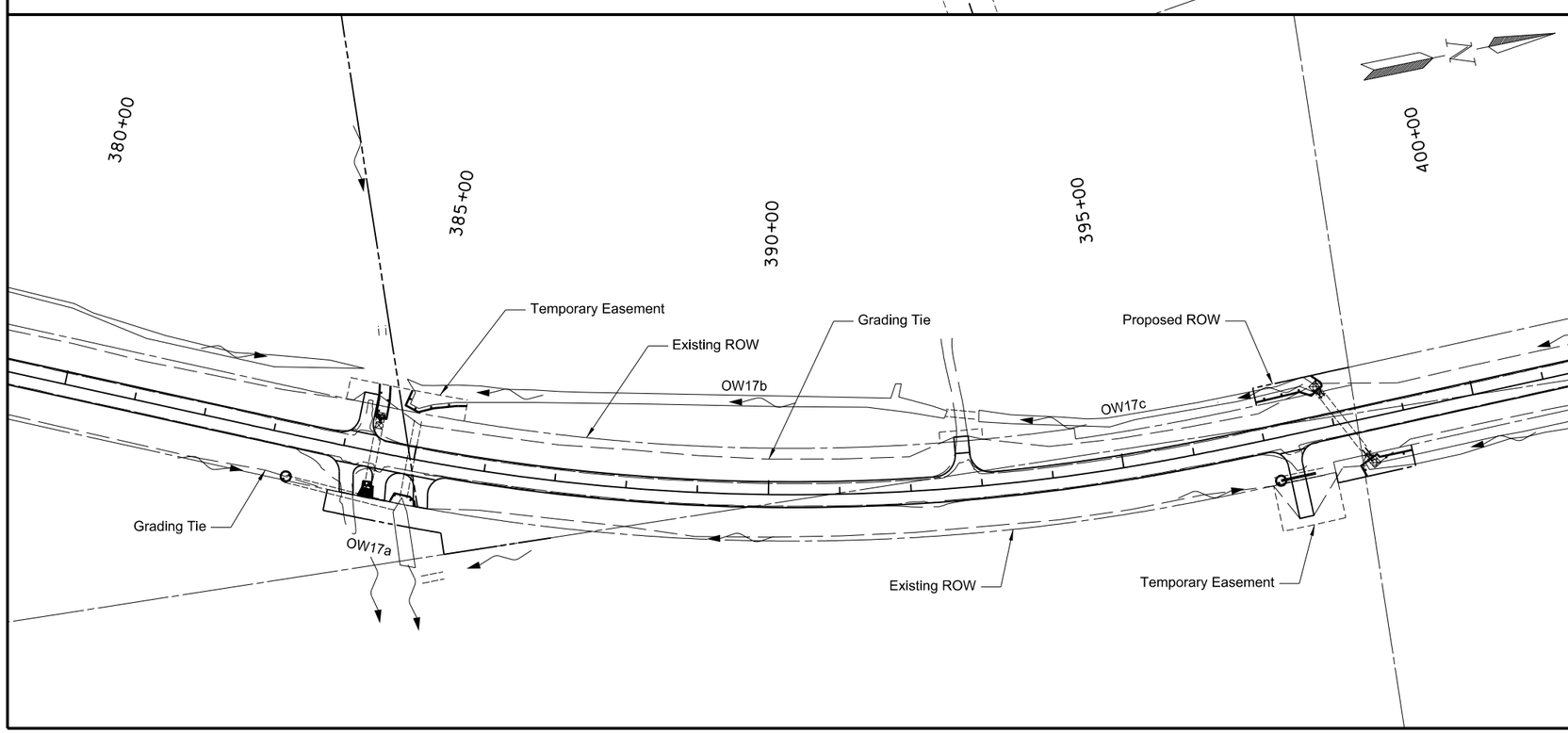

SPEC	CODE	BID ITEM	QUANTITY	UNIT
255	0103	ECB TYPE 3		
		369+10 - Lt & Rt	44	SY
		369+18 - Lt & Rt	44	SY
		384+96 - Lt	28	SY
		398+14 - Lt & Rt	56	SY
256	0200	RIPRAP GRADE II		
		384+96 - Rt	47	CY
261	0112	FIBER ROLLS 12IN		
		362+13 LT (Culvert Inlet)	30	LF
		362+23 LT to 363+03 LT (Wetland Area)	185	LF
		362+86 LT to 363+31 LT (Wetland Area)	145	LF
		363+48 RT to 368+94 RT (Wetland Area)	605	LF
		368+79 RT (Culvert Inlet)	30	LF
		368+86 RT (Culvert Inlet)	30	LF
		369+08 LT to 369+76 LT (Wetland Area)	170	LF
		370+59 LT (Culvert Inlet)	30	LF
		383+30 RT (Culvert Inlet)	30	LF
		384+36 LT to 384+51 LT (Wetland Area)	110	LF
		384+37 RT to 384+53 RT (Wetland Area)	50	LF
		384+75 LT to 385+61 LT (Wetland Area)	110	LF
		384+78 RT to 385+14 RT (Wetland Area)	50	LF
		397+00 LT to 397+96 LT (Wetland Area)	120	LF
		397+12 RT (Culvert Inlet)	30	LF
		398+25 RT to 399+00 RT (Wetland Area)	95	LF

Fiber Rolls

ECB Type 3

Riprap

Wetland Seeding

This document was originally issued and sealed by William Doerr, Registration Number PE- 7113, on 12/04/15 and the original document is stored at the North Dakota Department of Transportation

Permanent Sediment & Erosion Control

ND 58

Jct 200 to Jct 1804

STATE	PROJECT NO.	SECTION NO.	SHEET NO.
ND	SOIB-7-058(013)000	77	11

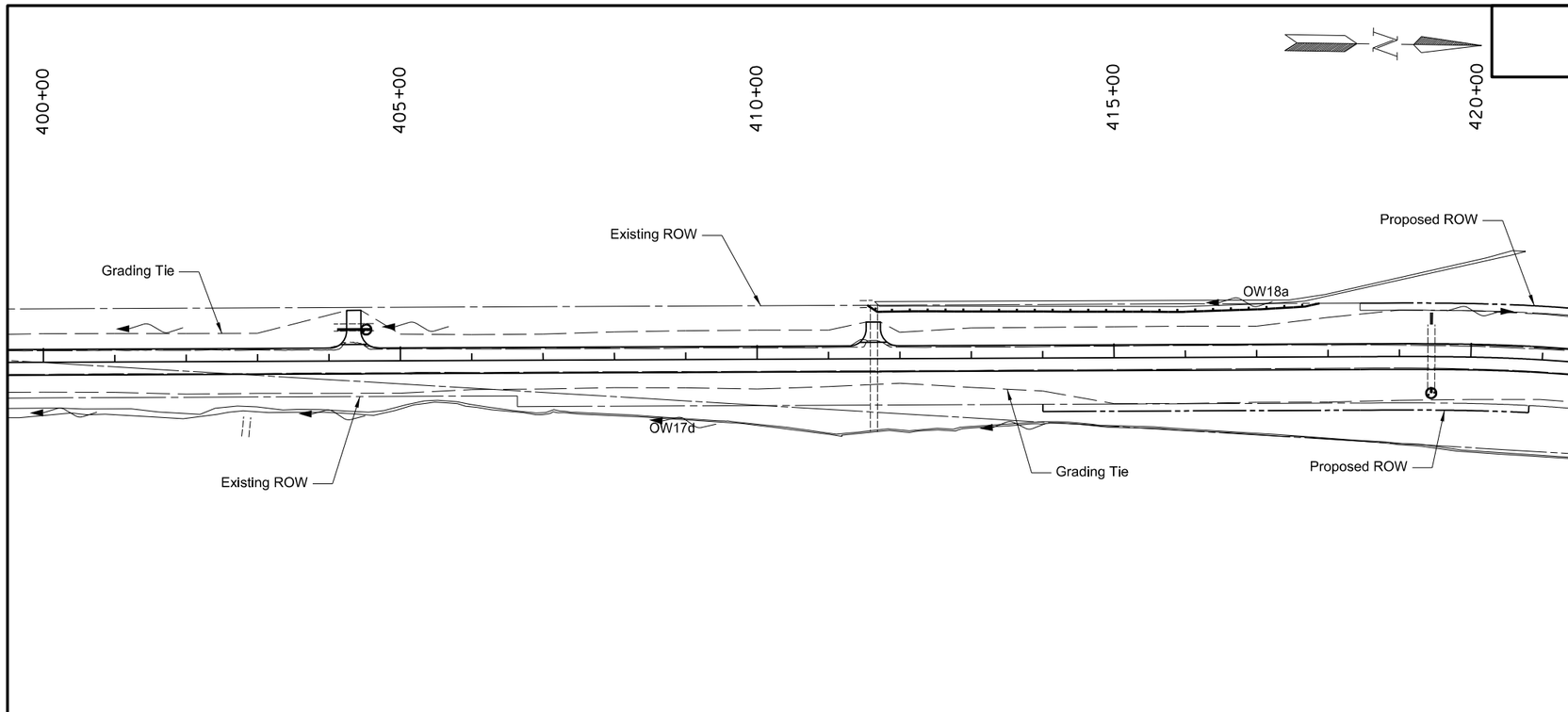

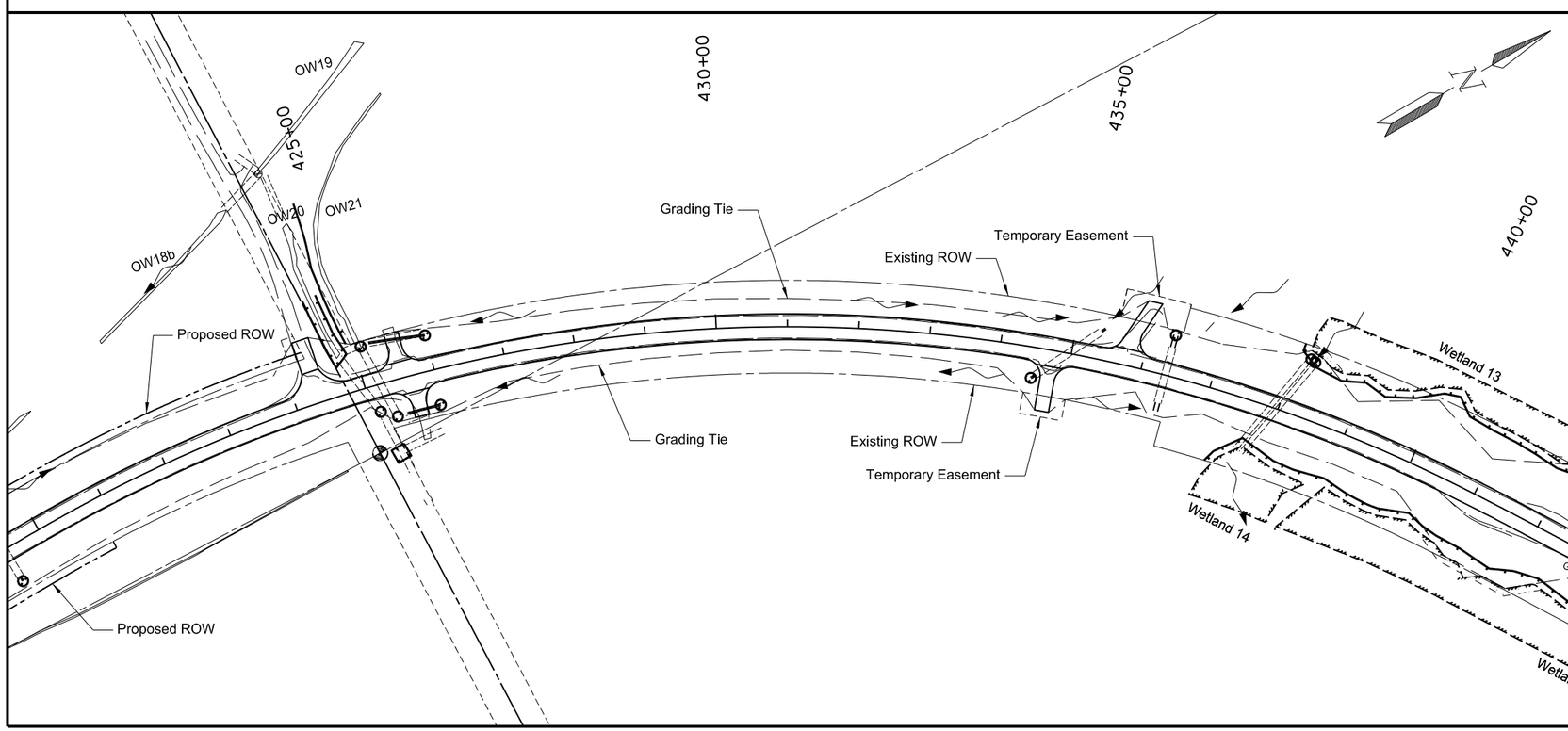

SPEC	CODE	BID ITEM	QUANTITY	UNIT
261	0112	FIBER ROLLS 12IN		
		404+52 LT (Culvert Inlet)	30	LF
		411+54 LT to 417+88 LT (Wetland Area)	635	LF
		419+45 RT (Culvert Inlet)	30	LF
		424+53 LT to 424+89 LT (Wetland Area)	225	LF
		425+10 LT (Culvert Inlet)	30	LF
		425+11 RT to 425+37 RT (Wetland Area)	80	LF
		425+12 RT (Culvert Inlet)	30	LF
		425+34 RT (Culvert Inlet)	30	LF
		425+97 RT (Culvert Inlet)	30	LF
		425+99 LT (Culvert Inlet)	30	LF
		434+50 RT (Culvert Inlet)	30	LF
		436+35 LT (Culvert Inlet)	30	LF
		437+22 RT to 440+00 RT (Wetland Area)	295	LF
		438+07 LT to 440+00 LT (Wetland Area)	230	LF

Fiber Rolls

ECB Type 3

Riprap

Wetland Seeding

This document was originally issued and sealed by William Doerr, Registration Number PE- 7113, on 12/04/15 and the original document is stored at the North Dakota Department of Transportation

Permanent Sediment & Erosion Control

ND 58

Jct 200 to Jct 1804

STATE	PROJECT NO.	SECTION NO.	SHEET NO.
ND	SOIB-7-058(013)000	77	12

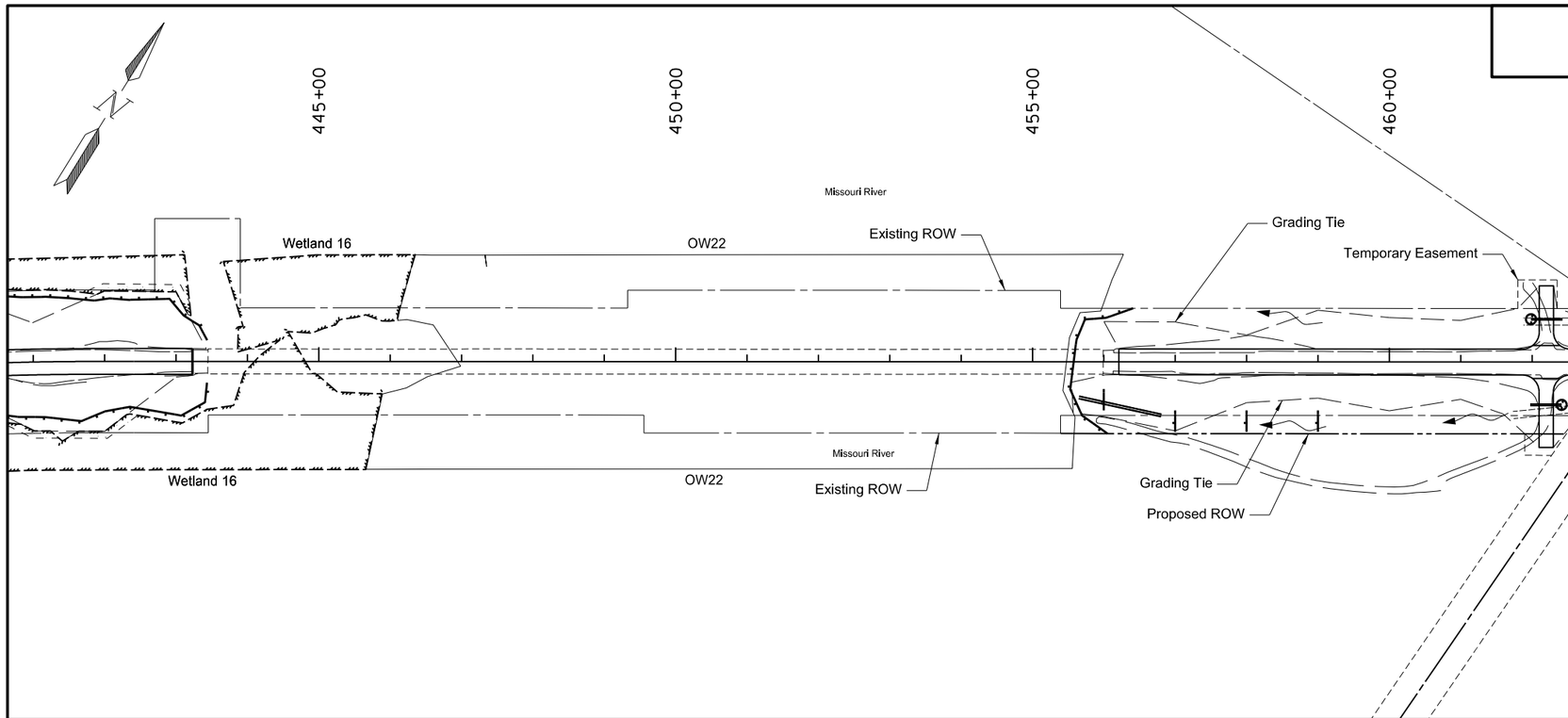

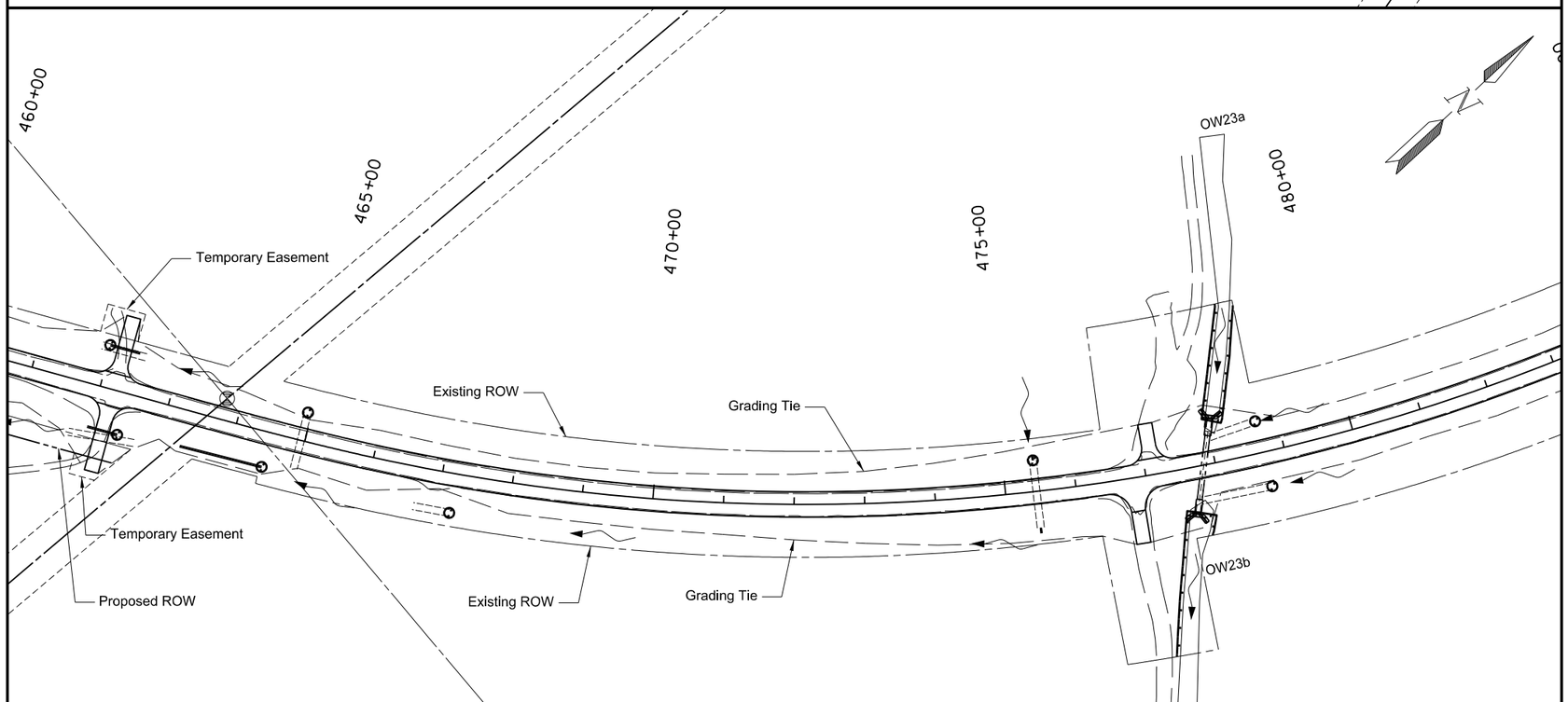

SPEC	CODE	BID ITEM	QUANTITY	UNIT
261	0112	FIBER ROLLS 12IN		
		440+00 RT to 447+43 RT (Wetland Area)	375	LF
		440+00 LT to 447+44 LT (Wetland Area)	385	LF
		455+58 LT to 456+41 LT (Wetland Area)	130	LF
		455+58 RT to 456+05 RT (Wetland Area)	120	LF
		456+00 RT to 459+00 RT (4 @ 100')	120	LF
		461+98 LT (Culvert Inlet)	30	LF
		462+41 RT (Culvert Inlet)	30	LF
		464+50 RT (Culvert Inlet)	30	LF
		464+94 LT (Culvert (Inlet)	30	LF
		467+19 RT (Culvert Inlet)	30	LF
		475+44 LT (Culvert Inlet)	30	LF
		477+00 RT to 477+88 RT (Wetland Area)	280	LF
		477+94 LT to 478+75 LT (Wetland Area)	360	LF
		478+68 LT (Culvert Inlet)	30	LF
		478+71 RT (Culvert Inlet)	30	LF

Fiber Rolls

ECB Type 3

Riprap

Wetland Seeding

This document was originally issued and sealed by William Doerr, Registration Number PE- 7113, on 12/04/15 and the original document is stored at the North Dakota Department of Transportation

Permanent Sediment & Erosion Control

ND 58

Jct 200 to Jct 1804

STATE	PROJECT NO.	SECTION NO.	SHEET NO.
ND	SOIB-7-058(013)000	77	13

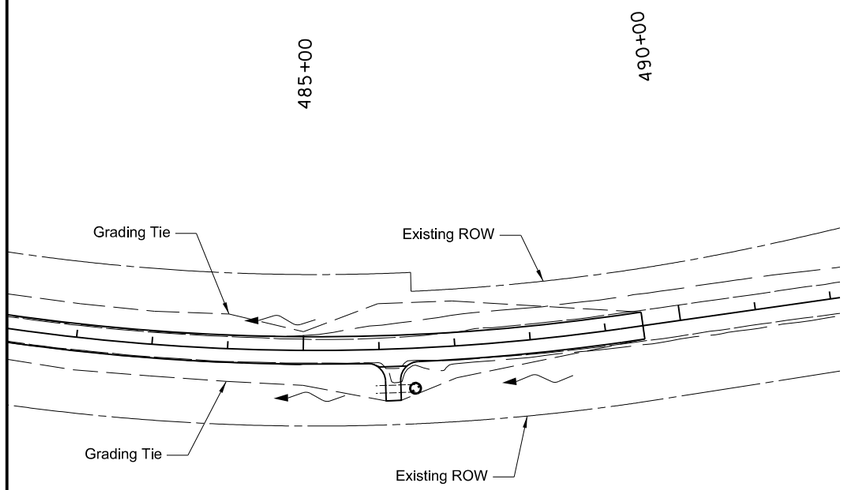

SPEC	CODE	BID ITEM	QUANTITY	UNIT
251	0200	SEEDING CLASS II 4+60 to 489+50	115	Acre
251	1000	WETLAND SEED 4+60 to 489+50	5	Acre
253	0101	STRAW MULCH 4+60 to 489+50	120	Acre
261	0112	FIBER ROLLS 12IN 486+46 RT (Culvert Inlet)	30	LF

Fiber Rolls

ECB Type 3

Riprap

Wetland Seeding

This document was originally issued and sealed by William Doerr, Registration Number PE- 7113, on 12/04/15 and the original document is stored at the North Dakota Department of Transportation

Permanent Sediment & Erosion Control

ND 58

Jct 200 to Jct 1804

PRELIMINARY SURVEY COORDINATE AND CURVE DATA - Jct ND 200 to Jct ND 1804, McKenzie County

STATE	PROJECT NO.	SECTION NO.	SHEET NO.
ND	SOIB-7-058(013)000	81	1

HORIZONTAL ALIGNMENT

PNT	STATION	NORTHING	EASTING
ND 58 - SCL58 - MCKENZIE			
Rec Sec Cor (Begin)	0+00.00	334636.88	1101646.89
Calc ¼ Cor	26+42.03	337276.23	1101766.04
Rec Sec Cor	52+83.51	339915.02	1101885.16
Calc ¼ Cor	79+22.73	342551.59	1102003.40
Rec Sec Cor	105+61.95	345188.16	1102121.64
Calc ¼ Cor	132+01.45	347825.01	1102240.04
PC	144+49.23	349071.53	1102296.01
PI C11	147+24.81	349346.83	1102308.37
PT	150+00.37	349622.32	1102315.43
TS	158+28.30	350449.97	1102336.65
SC	161+28.30	350749.65	1102349.57
PI SCS15	162+66.36	350887.89	1102347.88
CS	164+02.27	351021.36	1102383.94
ST	167+02.27	351314.82	1102446.04
TS	184+51.79	353019.87	1102838.05
SC	186+51.79	353214.97	1102882.01
PI SCS19	189+89.63	353544.03	1102958.56
CS	193+26.48	353879.86	1102995.28
ST	195+26.48	354078.52	1103018.40
PC	210+41.10	355583.73	1103186.91
PI C22	215+80.35	356119.63	1103246.91
PT	221+19.40	356657.76	1103281.64
TS	222+34.66	356772.78	1103289.06
SC	224+34.66	356972.44	1103300.78
PI SCS25	224+80.61	357018.22	1103304.90
CS	225+26.48	357064.19	1103304.35
ST	227+26.48	357264.15	1103308.22
TS	231+92.92	357730.55	1103314.52
SC	233+92.92	357930.51	1103318.38
PI SCS28	236+20.76	358158.35	1103320.30
CS	238+47.86	358384.19	1103350.50
ST	240+47.86	358582.70	1103374.84
Twp Line	264+30.81	360946.21	1103678.59

NOTES: Sheet 1 of 3 (McKenzie County)

CURVE DATA

ARC DEFINITION	ARC DEFINITION
C11	SCS15
PI Sta = 147+24.81	PI Sta = 162+66.36
Delta = 1° 06' 08" LT	Delta = 11° 28' 16" RT
D_a = 0° 12' 00"	D_a = 2° 00' 00"
R = 28,647.89	R = 2,864.79
T = 275.58	L_s = 300.00
L = 551.14	S_c = 3° 00' 00"
	T_s = 438.07
	L = 273.97
SCS19	C22
PI Sta = 189+89.63	PI Sta = 215+80.35
Delta = 6° 33' 37" LT	Delta = 2° 41' 45" LT
D_a = 0° 45' 00"	D_a = 0° 15' 00"
R = 7,639.44	R = 22,918.31
L_s = 200.00	T = 539.25
S_c = 0° 45' 00"	L = 1,078.30
T_s = 537.84	
L = 674.69	
SCS25	SCS28
PI Sta = 224+80.61	PI Sta = 236+20.76
Delta = 2° 55' 05" LT	Delta = 6° 32' 58" RT
D_a = 1° 00' 00"	D_a = 1° 00' 00"
R = 5,729.58	R = 5,729.58
L_s = 200.00	L_s = 200.00
S_c = 1° 00' 00"	S_c = 1° 00' 00"
T_s = 245.95	T_s = 427.84
L = 91.82	L = 454.94

Date Survey Completed 02/19/14

US PUBLIC LAND SURVEY DATA

DESC. SEC-TWP-RGE	NORTHING	EASTING
SE Sec Cor Sec 30 T-151-N R-104-W	334636.88	1101646.89
E ¼ Cor Sec 30 T-151-N R-104-W	337276.23	1101766.04
SE Sec Cor Sec 19 T-151-N R-104-W	339915.02	1101885.16
E ¼ Cor Sec 19 T-151-N R-104-W	342551.59	1102003.40
SE Sec Cor Sec 18 T-151-N R-104-W	345188.16	1102121.64
E ¼ Cor Sec 18 T-151-N R-104-W	347825.01	1102240.04
SW Sec Cor Sec 7 T-151-N R-104-W	350565.05	1100162.89
SE Sec Cor Sec 7 T-151-N R-104-W	350461.86	1102358.44
S ¼ Cor Sec 8 T-151-N R-104-W	350337.69	1104994.18
SE Sec Cor Sec 8 T-151-N R-104-W	350212.82	1107630.16
E ¼ Cor Sec 7 T-151-N R-104-W	353098.43	1102477.85
E ¼ Cor Sec 8 T-151-N R-104-W	352849.29	1107746.94
SE Sec Cor Sec 6 T-151-N R-104-W	355736.94	1102595.71
S ¼ Cor Sec 5 T-151-N R-104-W	355609.68	1105231.32
SE Sec Cor Sec 5 T-151-N R-104-W	355485.76	1107863.70
Witness Corner SE Cor Sec 5 T-151-N R-104-W	355484.82	1107883.68
E ¼ Cor Sec 6 T-151-N R-104-W	358371.32	1102713.94
E ¼ Cor Sec 5 T-151-N R-104-W	358120.16	1107986.08
SE Sec Cor Sec 31 T-152-N R-104-W	360984.63	1102831.22
S ¼ Cor Sec 32 T-152-N R-104-W	360865.33	1105462.92
SE Sec Cor Sec 32 T-152-N R-104-W	360741.39	1108107.84
E ¼ Cor Sec 31 T-152-N R-104-W	363625.17	1102950.86
E ¼ Cor Sec 32 T-152-N R-104-W	363385.94	1108222.05
SE Sec Cor Sec 30 T-152-N R-104-W	366261.57	1103067.37
S ¼ Cor Sec 29 T-152-N R-104-W	366161.50	1105705.33
SE Sec Cor Sec 29 T-152-N R-104-W	366061.65	1108337.62
E ¼ Cor Sec 30 T-152-N R-104-W	368897.61	1103187.29
CENTER Sec 29 T-152-N R-104-W	368793.11	1105823.13
E ¼ Cor Sec 29 T-152-N R-104-W	368677.01	1108449.91
SE Sec Cor Sec 19 T-152-N R-104-W	371533.65	1103307.21
S ¼ Cor Sec 20 T-152-N R-104-W	371412.75	1105940.38
SE Sec Cor Sec 20 T-152-N R-104-W	371292.37	1108562.21

☐ Assumed Coordinates

☒ All coordinates on this sheet are McKenzie County ground coordinates. They are derived from the "North Dakota Coordinate System of 1983", NAD83(2011), North Zone Combination factor (cf) = 0.9998485

SURVEY CONTROL POINTS

PNT	NORTHING	EASTING	ELEV	STATION	OFFSET
CONTROL POINT DESCRIPTION					
Primary Control					
GPS 1	343229.66	1101931.44	1923.84	85+97	102' Lt
Rebar & Cap - LS 3407 DOT					
RTK 2A	358321.47	1103503.24	1888.03	238+01	176' Rt
⅝ Rebar					
GPS 3	370272.73	1104639.11	1907.86	358+02	176' Lt
Rebar & Cap - LS 3407 DOT					
GPS 4	380622.81	1110313.10	1907.17	483+59	176' Rt
Rebar & Cap - LS 3407 DOT					

REFERENCE MARKERS

R Mkr #	NORTHING	EASTING	STATION	OFFSET
1	339884.90	1101919.25	52+55	35' Rt
3	350433.07	1102376.59	158+12	40' Rt
4	355654.00	1103227.15	211+15	32' Rt
5	360907.88	1103704.60	263+96	31' Rt
6	366147.91	1104390.45	316+81	43' Rt
7	371314.34	1105272.67	369+56	36' Rt
8	376447.02	1106079.97	422+37	33' Rt
9	379919.89	1109812.67	475+25	31' Rt

All coordinates and measurements on this document derived from the International Foot definition.

INITIALIZING BENCH MARK
NDGPS Stations (OPUS)

☒ NAVD-88 (GEOID12A)
☐ NGVD-29

☒ ENGLISH UNITS
☐ METRIC UNITS

This document was originally issued and sealed by David Nasset Registration Number LS- 4432, on 12/04/15 and the original document is stored at the North Dakota Department of Transportation

PRELIMINARY SURVEY COORDINATE AND CURVE DATA - Jct ND 200 to Jct ND 1804, McKenzie County

STATE	PROJECT NO.	SECTION NO.	SHEET NO.
ND	SOIB-7-058(013)000	81	2

HORIZONTAL ALIGNMENT

PNT	STATION	NORTHING	EASTING
ND 58 - SCL58 - MCKENZIE			
¼ Line	290+83.03	363576.80	1104016.66
Sec Line	317+40.62	366212.71	1104355.42
¼ Line	343+87.42	368837.92	1104692.81
TS	356+92.46	370132.32	1104859.16
SC	360+92.46	370526.84	1104923.92
PI SCS38	361+71.13	370607.08	1104920.17
CS	362+45.05	370673.76	1104964.98
ST	366+45.05	371044.71	1105114.09
Sec Line	370+77.60	371440.18	1105289.33
TS	382+60.72	372521.86	1105768.64
SC	385+60.72	372798.19	1105885.36
PI SCS166	390+44.19	373238.15	1106086.04
CS	395+07.06	373721.53	1106072.14
ST	398+07.06	374021.49	1106072.00
TS	418+44.90	376059.00	1106035.49
SC	420+84.90	376298.97	1106035.80
PI SCS158	431+51.35	377365.24	1106012.08
CS	440+01.02	377922.37	1106921.53
ST	442+41.02	378052.50	1107123.15
TS	463+00.67	379135.29	1108875.21
SC	466+00.67	379297.46	1109127.56
PI SCS77	477+74.02	379910.05	1110128.40
CS	489+31.93	381221.15	1110327.90
ST	489+31.93	381221.15	1110327.90
PC	493+53.36	381637.79	1110391.30
PI C88	504+21.22	382693.49	1110551.94
PT (End)	513+52.84	383252.06	1111462.06

CURVE DATA

ARC DEFINITION			
SCS38		SCS166	
PI Sta	= 361+71.13	PI Sta	= 390+44.19
Delta	= 16° 34' 32" RT	Delta	= 24° 55' 32" LT
D_a	= 2° 59' 59"	D_a	= 2° 00' 00"
R	= 1,910.08	R	= 2,864.93
L_s	= 400.00	L_s	= 300.00
S_c	= 5° 59' 58"	S_c	= 2° 59' 59"
T_s	= 478.67	T_s	= 783.46
L	= 152.58	L	= 946.34
SCS158		SCS77	
PI Sta	= 431+51.35	PI Sta	= 477+74.02
Delta	= 59° 17' 15" RT	Delta	= 49° 37' 22" LT
D_a	= 2° 44' 59"	D_a	= 2° 00' 00"
R	= 2,083.68	R	= 2,864.93
L_s	= 240.00	L_s in	= 300.00
S_c	= 3° 17' 59"	S_c in	= 2° 59' 59"
T_s	= 1,306.44	T_s in	= 1,473.34
L	= 1,916.11	T_s out	= 1,326.19
		L	2,331.26
C88			
PI Sta	= 504+21.22		
Delta	= 49° 48' 34" RT		
D_a	= 2° 29' 28"		
R	= 2,300.00		
T	= 1,067.86		
L	= 1,999.48		

US PUBLIC LAND SURVEY DATA

DESC. SEC-TWP-RGE	NORTHING	EASTING
E ¼ Cor Sec 19 T-152-N R-104-W	374168.79	1103425.12
E ¼ Cor Sec 20 T-152-N R-104-W	373927.78	1108682.85
SE Sec Cor Sec 18 T-152-N R-104-W	376805.53	1103543.77
S ¼ Cor Sec 17 T-152-N R-104-W	376681.83	1106182.39
SE Sec Cor Sec 17 T-152-N R-104-W	376563.19	1108803.50
E ¼ Cor Sec 18 T-152-N R-104-W	379443.90	1103662.53
E ¼ Cor Sec 17 T-152-N R-104-W	379202.93	1108924.35
CENTER Sec 16 T-152-N R-104-W	379077.93	1111563.45
E ¼ Cor Sec 16 T-152-N R-104-W	378925.02	1114195.66
SE Sec Cor Sec 7 T-152-N R-104-W	382082.27	1103781.29
S ¼ Cor Sec 8 T-152-N R-104-W	381959.90	1106415.13
SE Sec Cor Sec 8 T-152-N R-104-W	381837.54	1109048.96
S ¼ Cor Sec 9 T-152-N R-104-W	381714.96	1111678.17
SE Sec Cor Sec 9 T-152-N R-104-W	381590.44	1114321.05

SURVEY CONTROL POINTS

PNT	NORTHING	EASTING	ELEV	STATION	OFFSET	CONTROL POINT DESCRIPTION

All coordinates and measurements on this document derived from the International Foot definition.

INITIALIZING BENCH MARK
NDGPS Stations (OPUS)

- [x] NAVD-88 (GEOID12A)
- [ ] NGVD-29

- [x] ENGLISH UNITS
- [ ] METRIC UNITS

- [ ] Assumed Coordinates
- [x] All coordinates on this sheet are McKenzie County ground coordinates. They are derived from the "North Dakota Coordinate System of 1983", NAD83(2011), North Zone Combination factor (cf) = 0.9998485

Date Survey Completed 02/19/14

This document was originally issued and sealed by David Nasset Registration Number LS- 4432, on 12/04/15 and the original document is stored at the North Dakota Department of Transportation

NOTES: Sheet 2 of 3 (McKenzie County)

PRELIMINARY SURVEY COORDINATE AND CURVE DATA - Jct ND 200 to Jct ND 1804, McKenzie County

STATE	PROJECT NO.	SECTION NO.	SHEET NO.
ND	SOIB-7-058(013)000	81	3

HORIZONTAL ALIGNMENT

PNT	STATION	NORTHING	EASTING
ND 200 - SCL200 - MCKENZIE			
PC (Begin)	0+00.00	334671.30	1099659.19
PI C401	1+93.46	334725.73	1099844.84
PT	3+83.30	334716.21	1100038.06
Intersection of ND 200 and ND 58			
ND 200	19+94.10 BK=19+95.84 AH	334636.92	1101646.90
ND 58	0+00.00	334636.92	1101646.90
Point 403 (End)	46+34.90	334518.87	1104283.32
ND 1804 - SCL1804 - WILLIAMS			
Point 83 (Begin)	17906+13.58	384767.25	1120484.40
PC	17974+35.19	383612.84	1113761.17
PI C79	17977+37.01	383561.76	1113463.71
PT	17980+36.61	383573.80	1113162.13
PC	17984+42.24	383589.97	1112756.82
PI C89	17991+41.55	383617.85	1112058.07
Intersection of ND 1804 and ND 58			
ND 1804 PT	17998+00.00	383252.06	1111462.06
ND 58	513+52.84	383252.06	1111462.06
PC	18003+30.35	383704.08	1111184.65
PI C84	18006+50.47	383976.91	1111017.20
PT	18009+25.26	384010.49	1110698.85
Point 86 (End)	18045+67.11	384392.55	1107077.10

CURVE DATA

ARC DEFINITION		
	C401	
PI Sta =	1+93.46	
Delta =	19° 09' 33" RT	
D_a =	4° 59' 54"	
R =	1,146.28	
T =	193.46	
L =	383.30	
	C79	C89
PI Sta =	17977+37.01	PI Sta = 17991+41.55
Delta =	12° 01' 40" RT	Delta = 33° 49' 24" LT
D_a =	2° 00' 00"	D_a = 2° 29' 28"
R =	2,864.93	R = 2,300.00
T =	301.82	T = 699.31
L =	601.42	L = 1,357.76
	C84	
PI Sta =	18006+50.47	
Delta =	52° 26' 22" LT	
D_a =	8° 48' 53"	
R =	650.00	
T =	320.12	
L =	594.91	

US PUBLIC LAND SURVEY DATA

DESC. SEC-TWP-RGE	NORTHING	EASTING

SURVEY CONTROL POINTS

PNT	NORTHING	EASTING	ELEV	STATION	OFFSET	CONTROL POINT DESCRIPTION

NOTES: Sheet 3 of 3 (McKenzie County)

Date Survey Completed 02/19/14

☐ Assumed Coordinates

☒ All coordinates on this sheet are McKenzie County ground coordinates. They are derived from the "North Dakota Coordinate System of 1983", NAD83(2011), North Zone Combination factor (cf) = 0.9998485

All coordinates and measurements on this document derived from the International Foot definition.

INITIALIZING BENCH MARK
NDGPS Stations (OPUS)

☒ NAVD-88 (GEOID12A)
☐ NGVD-29

☒ ENGLISH UNITS
☐ METRIC UNITS

This document was originally issued and sealed by David Nasset Registration Number LS- 4432, on 12/04/15 and the original document is stored at the North Dakota Department of Transportation