North Dakota Department of Transportation

Grant Levi, P.E.
Director

Jack Dalrymple
Governor

February 2, 2016

ADDENDUM 2 – JOB 13

TO: All prospective bidders on project SOIB-7-058(013)000, Job No. 13 scheduled for the February 5, 2016 bid opening.

The following plan and request for proposal revision shall be made:

Plan Revisions:
See attached summary from William Doerr, PE; Brosz Engineering, dated February 1, 2016 for an explanation.

Request for Proposal Revisions:
Remove and replace pages 5-12 of 14 of the Proposal pages located at the beginning of the Request for Proposal, with the enclosed pages revised 2/2/2016.

Page 5 of 14:
Item 107 0100 RAILWAY PROTECTION INSURANCE; 1 Lump Sum was added.
Item 203 0109 TOPSOIL; quantity increased from 58,285 to 60,736 CY.
Item 203 0113 COMMON EXCAVATION-WASTE; quantity increased from 23,233 to 38,653 CY.

Page 6 of 14:
Item 203 0140 BORROW-EXCAVATION; quantity increased from 179,486 to 194,906 CY.
Item 216 0100 WATER; quantity increased from 5178 to 5332 M GAL.

Page 7-12 of 14:
Items shifted due to added item.

This addendum is to be incorporated into the bidder's proposal for this project.
Expedite bid files should be updated by downloading the addendum file from the Bid Express on-line bidding exchange at http://www.bidx.com/ or the Department's web page (http://www.dot.nd.gov) and load it into the Expedite program.

For CAL J. GENDREAU – CONSTRUCTION SERVICES ENGINEER
80:plm
Enclosure

109 S. Main • Box 357
Bowman, ND 58623
Ph: 701.523.3340
BROSZ ENGINEERING, INC.
ARCHITECTURE ENGINEERING SURVEYING

February 1, 2016

ADDENDUM 2
JOB NO. 13

TO: All prospective bidders and suppliers on Project SOIB-7-058(013)000, Job No. 13 in McKenzie and Williams County, scheduled for the February 5, 2016 bid opening.

The following plan revisions shall be made:

Plan Revisions:

Remove and replace sheets 2-1, 6-2, 8-1, 11-1, 50-2, 50-2B, 50-3, 50-5, 50-7 & 50-9 with the enclosed sheets revised 2/01/2016.

Add sheet 11-6A & 11-6B dated 2/01/2016.

Utility Conflict Plans have been added as Supplemental Information.

Section 2, Sheet 2: Standard Drawing D-714-11 *Traversable End Sections for Corrugated Steel Pipe Culverts* was added to the list of Standard Drawings.

Section 6, Sheet 2: The Common Excavation-Waste quantity in Plan Note 203-P01 was updated.

Section 8, Sheet 1: The following bid item was added:
107-0100 Railway Protection Insurance
The following bid items had quantities updated:
203-0109 Topsoil
203-0113 Common Excavation-Waste
203-0140 Borrow-Excavation
216-0100 Water

Section 11, Sheet 1: A row was added to the earthwork summary to separate the earthwork quantities between the finished cross sections and the temporarily widened cross sections. The Embankment, Common Excavation Waste, Borrow Excavation and Topsoil totals were updated.

Section 11, Sheet 6A: A table was added to show the earthwork values for the Temporary Widening areas.

Section 11, Sheet 6B: A table was added to show the earthwork values for the Temporary Widening areas.

Section 50, Sheets 2, 2B, 3, 5, 7 & 9: The concrete bid item was changed to 602-0130 Class AAE-3 Concrete. The quantity did not change.

This Addendum is to be incorporated into the bidder's proposal for this project.

Sincerely,

William Doerr, PE
Project Engineer
Brosz Engineering, Inc.

BID ITEMS

Project: SOIB-7-058(013)000 (PCN-20416)

Bidder must type or neatly print unit prices in numerals, make extensions for each item, and total. Do not carry unit prices further than three (3) decimal places.

Item No.	Spec No.	Code No.	Description	Unit	Approx. Quantity	Unit Price		Amount	
						$$$$$	000	$$$$$	00
001	103	0100	CONTRACT BOND	L SUM	1.				
002	103	0200	ESCROW OF BID DOCUMENTATION	L SUM	1.				
003	107	0100	RAILWAY PROTECTION INSURANCE	L SUM	1.				
004	201	0330	CLEARING & GRUBBING	L SUM	1.				
005	202	0112	REMOVAL OF CONCRETE	SY	147.				
006	202	0115	REMOVAL OF CONCRETE-SITE 1	L SUM	1.				
007	202	0116	REMOVAL OF CONCRETE-SITE 2	L SUM	1.				
008	202	0123	REMOVE & SALVAGE AGGREGATE BASE	TON	16,920.				
009	202	0135	REMOVAL OF BITUMINOUS SURFACING	TON	4,783.				
010	202	0169	REMOVAL OF END SECTION-ALL TYPES & SIZES	EA	29.				
011	202	0174	REMOVAL OF PIPE ALL TYPES AND SIZES	LF	3,584.				
012	203	0101	COMMON EXCAVATION-TYPE A	CY	29,723.				
013	203	0108	TOPSOIL-BORROW AREA	CY	16,100.				
014	203	0109	TOPSOIL	CY	60,736.				
015	203	0113	COMMON EXCAVATION-WASTE	CY	38,653.				
016	203	0121	TOPSOIL-WETLAND	CY	782.				

BID ITEMS

Project: SOIB-7-058(013)000 (PCN-20416)

Bidder must type or neatly print unit prices in numerals, make extensions for each item, and total. Do not carry unit prices further than three (3) decimal places.

Item No.	Spec No.	Code No.	Description	Unit	Approx. Quantity	Unit Price $$$$$	Unit Price 000	Amount $$$$$	Amount 00
017	203	0140	BORROW-EXCAVATION	CY	194,906.				
018	210	0051	BOX CULVERT EXCAVATION - SITE 1	EA	1.				
019	210	0052	BOX CULVERT EXCAVATION - SITE 2	EA	1.				
020	210	0202	FOUNDATION PREPARATION-SITE 1	L SUM	1.				
021	210	0203	FOUNDATION PREPARATION-SITE 2	L SUM	1.				
022	210	0210	FOUNDATION FILL	CY	188.				
023	216	0100	WATER	M GAL	5,332.				
024	220	0100	PREPARE STOCKPILE SITE	L SUM	1.				
025	220	0200	RESTORE STOCKPILE SITE	L SUM	1.				
026	251	0200	SEEDING CLASS II	ACRE	115.				
027	251	1000	WETLAND SEED	ACRE	5.				
028	251	2000	TEMPORARY COVER CROP	ACRE	120.				
029	253	0101	STRAW MULCH	ACRE	240.				
030	255	0103	ECB TYPE 3	SY	461.				
031	256	0200	RIPRAP GRADE II	CY	260.				
032	260	0200	SILT FENCE SUPPORTED	LF	5,940.				

BID ITEMS

Project: SOIB-7-058(013)000 (PCN-20416)

Bidder must type or neatly print unit prices in numerals, make extensions for each item, and total. Do not carry unit prices further than three (3) decimal places.

Item No.	Spec No.	Code No.	Description	Unit	Approx. Quantity	Unit Price		Amount	
						$$$$$	000	$$$$$	00
033	260	0201	REMOVE SILT FENCE SUPPORTED	LF	5,940.				
034	261	0112	FIBER ROLLS 12IN	LF	95,855.				
035	261	0113	REMOVE FIBER ROLLS 12IN	LF	49,490.				
036	262	0100	FLOTATION SILT CURTAIN	LF	80.				
037	262	0101	REMOVE FLOTATION SILT CURTAIN	LF	80.				
038	302	0100	SALVAGED BASE COURSE	TON	116,545.				
039	302	0316	TRAFFIC SERVICE GRAVEL	CY	200.				
040	306	0510	FULL DEPTH RECLAMATION	SY	141,782.				
041	401	0050	TACK COAT	GAL	9,477.				
042	401	0060	PRIME COAT	GAL	18,082.				
043	401	0160	BLOTTER MATERIAL CL 44	TON	545.				
044	411	0105	MILLING PAVEMENT SURFACE	SY	1,200.				
045	430	0045	SUPERPAVE FAA 45	TON	28,972.				
046	430	1000	CORED SAMPLE	EA	88.				
047	430	5828	PG 58-28 ASPHALT CEMENT	TON	1,276.				
048	430	6434	PG 64-34 ASPHALT CEMENT	TON	442.				

Project: SOIB-7-058(013)000 (PCN-20416)

Bidder must type or neatly print unit prices in numerals, make extensions for each item, and total. Do not carry unit prices further than three (3) decimal places.

Item No.	Spec No.	Code No.	Description	Unit	Approx. Quantity	Unit Price $$$$$	Unit Price 000	Amount $$$$$	Amount 00
049	550	0302	8.5IN NON-REINF CONCRETE PVMT CL AE-DOWELED	SY	123,723.				
050	602	0130	CLASS AAE-3 CONCRETE	CY	87.100				
051	602	1131	CLASS AE-3 CONCRETE-BOX CULVERT	CY	144.600				
052	606	0806	8FT X 6FT PRECAST RCB CULVERT	LF	46.				
053	606	4806	8FT X 6FT PRECAST RCB END SECTION	EA	2.				
054	612	0114	REINFORCING STEEL-GRADE 60-BOX CULVERT	LBS	20,117.				
055	612	0115	REINFORCING STEEL-GRADE 60	LBS	13,247.				
056	702	0100	MOBILIZATION	L SUM	1.				
057	704	0100	FLAGGING	MHR	5,000.				
058	704	1000	TRAFFIC CONTROL SIGNS	UNIT	3,570.				
059	704	1052	TYPE III BARRICADE	EA	100.				
060	704	1060	DELINEATOR DRUMS	EA	200.				
061	704	1067	TUBULAR MARKERS	EA	650.				
062	704	1080	STACKABLE VERTICAL PANELS	EA	2,600.				
063	704	1081	VERTICAL PANELS-BACK TO BACK	EA	50.				
064	704	1185	PILOT CAR	HR	2,000.				

BID ITEMS

Project: SOIB-7-058(013)000 (PCN-20416)

Bidder must type or neatly print unit prices in numerals, make extensions for each item, and total. Do not carry unit prices further than three (3) decimal places.

Item No.	Spec No.	Code No.	Description	Unit	Approx. Quantity	Unit Price $$$$$	Unit Price 000	Amount $$$$$	Amount 00
065	706	0400	FIELD OFFICE	EA	1.				
066	706	0500	AGGREGATE LABORATORY	EA	1.				
067	706	0550	BITUMINOUS LABORATORY	EA	1.				
068	706	0600	CONTRACTOR'S LABORATORY	EA	2.				
069	709	0155	GEOSYNTHETIC MATERIAL TYPE RR	SY	552.				
070	714	0310	PIPE CONC REINF 18IN CL III	LF	14.				
071	714	0615	PIPE CONC REINF 24IN CL III	LF	172.				
072	714	0820	PIPE CONC REINF 30IN CL III	LF	2,603.				
073	714	0905	PIPE CONC REINF 36IN CL III	LF	24.				
074	714	1005	PIPE CONC REINF 42IN CL III	LF	1,328.				
075	714	1105	PIPE CONC REINF 48IN CL III	LF	138.				
076	714	1310	PIPE CONC REINF 60IN CL III	LF	72.				
077	714	1510	PIPE CONC REINF 72IN CL III	LF	30.				
078	714	2165	PIPE CONC REINF ARCH 65IN X 40IN CL III	LF	826.				
079	714	3023	END SECT-TRAVERSABLE REINF. CONC.24IN	EA	21.				
080	714	3033	END SECT-TRAVERSABLE REINF. CONC.30IN	EA	2.				

BID ITEMS

Project: SOIB-7-058(013)000 (PCN-20416)

Bidder must type or neatly print unit prices in numerals, make extensions for each item, and total. Do not carry unit prices further than three (3) decimal places.

Item No.	Spec No.	Code No.	Description	Unit	Approx. Quantity	Unit Price		Amount	
						$$$$$	000	$$$$$	00
081	714	3036	END SECT-TRAVERSABLE REINF. CONC.36IN	EA	3.				
082	714	4100	PIPE CONDUIT 18IN	LF	1,100.				
083	714	4106	PIPE CONDUIT 24IN-APPROACH	LF	3,004.				
084	714	4113	PIPE CONDUIT 30IN-APPROACH	LF	58.				
085	714	4116	PIPE CONDUIT 36IN-APPROACH	LF	186.				
086	714	7033	PIPE PVC 15IN	LF	54.				
087	714	9660	REMOVE & RELAY END SECTION-ALL TYPE & SIZES	EA	18.				
088	720	0110	RIGHT OF WAY MARKERS	EA	238.				
089	720	0125	ALIGNMENT MONUMENTS	EA	52.				
090	720	0130	IRON PIN R/W MONUMENTS	EA	180.				
091	720	0135	IRON PIN REFERENCE MONUMENTS	EA	58.				
092	722	0120	MANHOLE 72IN	EA	4.				
093	722	1120	MANHOLE RISER 72IN	LF	29.				
094	722	3453	GRATE-TYPE 1	EA	2.				
095	722	4565	MEDIAN DRAIN PRECAST CONCRETE-TYPE A	EA	2.				
096	754	0112	FLAT SHEET FOR SIGNS-TYPE IV REFL SHEETING	SF	29.800				

BID ITEMS

Project: SOIB-7-058(013)000 (PCN-20416)

Bidder must type or neatly print unit prices in numerals, make extensions for each item, and total. Do not carry unit prices further than three (3) decimal places.

Item No.	Spec No.	Code No.	Description	Unit	Approx. Quantity	Unit Price $$$$$	Unit Price 000	Amount $$$$$	Amount 00
097	754	0115	FLAT SHEET FOR SIGNS-TYPE IX REFL SHEETING	SF	119.800				
098	754	0206	STEEL GALV POSTS-TELESCOPING PERFORATED TUBE	LF	737.900				
099	754	0561	REFERENCE MARKER-TYPE A	EA	9.				
100	754	0592	RESET SIGN PANEL	EA	22.				
101	754	0805	OBJECT MARKERS - CULVERTS	EA	184.				
102	760	0001	RUMBLE STRIPS - CONCRETE SHOULDER	MILE	7.300				
103	760	0003	RUMBLE STRIPS - CONCRETE CENTERLINE	MILE	2.600				
104	760	0005	RUMBLE STRIPS - ASPHALT SHOULDER	MILE	17.900				
105	760	0007	RUMBLE STRIPS - ASPHALT CENTERLINE	MILE	2.800				
106	762	0112	EPOXY PVMT MK MESSAGE	SF	48.				
107	762	0113	EPOXY PVMT MK 4IN LINE	LF	52,799.				
108	762	0115	EPOXY PVMT MK 8IN LINE	LF	530.				
109	762	0117	EPOXY PVMT MK 24IN LINE	LF	23.				
110	762	0122	PREFORMED PATTERNED PVMT MK-MESSAGE(GROOVED)	SF	864.				
111	762	0430	SHORT TERM 4IN LINE-TYPE NR	LF	119,975.				
112	762	1305	PREFORMED PATTERNED PVMT MK 4IN LINE-GROOVED	LF	154,699.				

BID ITEMS

Project: SOIB-7-058(013)000 (PCN-20416)

Bidder must type or neatly print unit prices in numerals, make extensions for each item, and total. Do not carry unit prices further than three (3) decimal places.

Item No.	Spec No.	Code No.	Description	Unit	Approx. Quantity	Unit Price $$$$$	Unit Price 000	Amount $$$$$	Amount 00
113	762	1309	PREFORMED PATTERNED PVMT MK 8IN LINE-GROOVED	LF	11,500.				
114	762	1325	PREFORMED PATTERNED PVMT MK 24IN LINE-GROOVED	LF	222.				
115	764	0131	W-BEAM GUARDRAIL	LF	395.				
116	764	0145	W-BEAM GUARDRAIL END TERMINAL	EA	4.				
117	764	0150	REMOVE & RESET GUARDRAIL	LF	300.				
118	764	0151	REMOVE W-BEAM GUARDRAIL & POSTS	LF	208.				
119	764	2081	REMOVE END TREATMENT & TRANSITION	EA	4.				
120	766	0100	MAILBOX-ALL TYPES	EA	11.				
121	900	1000	TEMPORARY STREAM DIVERSION	EA	2.				
122	910	0695	SLUICE GATE 15IN	EA	2.				
123	910	0702	SLUICE GATE 42IN	EA	1.				
124	920	1240	ARCHEOLOGIST	L SUM	1.				
125	920	1241	BIOLOGIST	L SUM	1.				
			TOTAL SUM BID						

Supplemental Design Data – Addendum 2

Utility Conflict Plans have been added to the Supplemental Bid Information as part of Addendum 2 on 2/2/2016 at 11 am.

SOIB-7-058(013)000, PCN 20416

The NDDOT has provided supplemental design data that may aid the contractor in preparing a bid. These electronic files are located on the NDDOT "ftp" site. The address is as follows:

ftp://ftp.state.nd.us/Supplemental_Bid_Information/

This information can be accessed with the following login information.
User Name: NDDOTContractor
Password: Build123

LIST OF STANDARD DRAWINGS

Standard No.	Description
D-101-1	NDDOT Abbreviations
D-101-2	NDDOT Abbreviations
D-101-3	NDDOT Abbreviations
D-101-10	NDDOT Utility Company and Organization Abbreviations
D-101-20	Line Styles
D-101-21	Line Styles
D-101-30	Symbols
D-101-31	Symbols
D-101-32	Symbols
D-203-7	Recovery Approaches at T-Intersections
D-203-8	Standard Rural Approaches
D-255-2	Erosion and Siltation Control – Erosion Control Blanket Installation
D-260-1	Erosion and Siltation Controls – Silt Fence
D-261-1	Erosion Control – Fiber Roll Placement Details
D-550-2	Longitudinal Joint Details
D-550-3	Transverse Contraction Joint Details
D-550-5	Transverse Construction Joint
D-704-1	Attenuation Device
D-704-2	Traffic Control For Coring Of Hot Bituminous Pavement
D-704-5	Contractor Sign Detail
D-704-7	Breakaway Systems For Construction Zone Signs - Perforated Tube
D-704-8	Breakaway Systems For Construction Zone Signs – U-Channel Post
D-704-9	Construction Sign Details – Terminal and Guide Signs
D-704-10	Construction Sign Details – Regulatory Signs
D-704-11	Construction Sign Details – Warning Signs
D-704-12	Shoulder Closure Tapers
D-704-13	Barricade and Channelizing Device Details
D-704-14	Construction Sign Punching and Mounting Details
D-704-15	Road Closure Layouts
D-704-16	Lane Closure on a Two Lane Road Using Traffic Control Signals
D-704-17	Sign Layout for One Lane Closure Two Lane Roadway
D--704-19	Road Closure and Lane Closure on a Two Way Road Layouts

LIST OF STANDARD DRAWINGS

Standard No.	Description
D-704-20	Terminal and Seal Coat Sign Layouts
D-704-22	Construction Truck and Temporary Detour Layouts
D-704-24	Shoulder Closures and Bridge Painting Layouts
D-704-26	Miscellaneous Sign Layouts
D-704-27	Traffic Control Plan for Moving Operations
D-704-30	Windrow Marking
D-704-50	Portable Sign Support Assembly
D-704-56	Mobile Operation - Grinding Shoulder Rumble Strips
D-706-1	Bituminous Laboratory
D-708-6	Erosion and Siltation Controls – Median or Ditch Inlet Protection
D-714-1	Reinforced Concrete Pipe Culverts & End Sections (Round Pipe)
D-714-4	Round Corrugated Steel Pipe Culverts & End Sections
D-714-11	Traversable End Sections For Corrugated Steel Pipe Culverts
D-714-22	Concrete Pipe or Precast Concrete Box Culvert Ties
D-720-1	Standard Monuments and Right of Way Markers
D-722-1A	Inlet - Catch Basin
D-722-5	Manhole Details
D-722-7	Precast Concrete Median Drain
D-754-9	Letter and Arrow Details For Variable Length Signs
D-754-19	(Conventional Use) Reference Markers
D-754-23	Perforated Tube Assembly Details
D-754-24	Mounting Details Perforated Tube
D-754-24A	Breakaway Coupler System for Perforated Tubes
D-754-25	Mounting Details Perforated Tube
D-754-26	Sign Punching, Stringer, and Support Location Details Regulatory, Warning and Guide Signs
D-754-27	Sign Punching, Stringer, and Support Location Details Regulatory, Warning and Guide Signs
D-754-29	Sign Punching, Stringer, and Support Location Details Regulatory, Warning and Guide Signs
D-754-32	Sign Punching, Stringer, and Support Location Details Regulatory, Warning and Guide Signs
D-754-40	Sign Punching, Stringer, and Support Location Details Regulatory, Warning and Guide Signs
D-754-47	Sign Punching, Stringer and Support Location Details For Variable Length Signs

PLAN NOTES

201-P01 CLEARING & GRUBBING: Remove trees from within the work limits at the following locations, as well as any additional locations not listed below but ordered by the Engineer, before March 31 or after October 1. See Environmental Note EC-06. Remove trees according to Section 201 Clearing and Grubbing. Payment for “Clearing and Grubbing” will be lump sum.

- 146+00 Left
- 198+00 Right
- 354+00 Left
- 361+00 Left & Right
- 441+00 Right
- 464+00 Right

202-P01 REMOVAL OF BITUMINOUS SURFACING: Include the cost of the full depth vertical saw cuts adjacent to pavement removal areas, specified in Section 202.04 A “General”, in the contract unit price for “Removal of Bituminous Surfacing.”

202-P02 REMOVAL OF CONCRETE: Remove and dispose of the existing concrete irrigation headwalls and end structures as specified in the plans.

202-P03 REMOVE & SLAVAGE AGGREGATE BASE: Temporary gravel surfacing is necessary to maintain traffic during construction and is shown on the cross sections. The quantity for this temporary gravel surfacing is estimated at 16,920 ton and is included in the plan quantity of salvaged base course. Upon opening the roadway back to two lanes of traffic, remove and dispose of the temporary gravel surfacing.

Include all costs associated with the removal and disposal of the temporary gravel surfacing in the price bid for “Remove & Salvage Aggregate Base.”

203-010 SHRINKAGE: 25 percent additional volume is included for shrinkage in earth embankment.

203-385 AVERAGE HAUL: No average haul has been computed for this project.

203-P01 COMMON EXCAVATION-WASTE: Temporary embankment material is necessary to maintain traffic during construction and is shown on the cross sections. The quantity for this temporary embankment material is estimated at 38,653 cubic yards and is included in the plan quantity of borrow excavation. Upon opening the roadway back to two lanes of traffic, remove and dispose of the temporary embankment material.

Include all costs associated with the removal and disposal of the temporary embankment material in the price bid for “Common Excavation-Waste.” Plan quantity will be used as the measurement for payment of “Common Excavation-Waste.”

203-P02 COMMON EXCAVATION-TYPE A: Determine the optimum moisture and density, as specified in ND T 180, for each type of material encountered that requires compaction control. Perform a multi-point test using a minimum of 4 points. Submit the results to the Engineer along with a split sample of each material.

The Engineer will perform comparison tests using the same procedure on the split sample. The Engineer’s results will be used for determining in place density of material.

203-P03 BORROW-EXCAVATION: Do not excavate within 50’ of the gas lines located within Borrow Site #1. If the driveway is impacted during the borrow excavation, maintain reasonable access to the house on the property. Rehabilitate the impacted driveway to a 20’ width with 6” of gravel surfacing. The cost for rehabilitating the driveway shall be included in the unit price bid for "Borrow-Excavation."

302-P01 TRIMMING BLENDED BASE: Use Surface Tolerance Type B for the blended base. Incorporate excess material removed by the trimming operation from the high points into the low points or into the salvaged base course. The cost for providing the required grade and cross section shall be included in the unit price bid for "Full Depth Reclamation."

430-P01 LONGITUDINAL JOINTS: For the top lift of HBP, paving seams are not allowed in the wheel path of the 12’ driving lanes.

550-P01 LEAVE OUTS: A leave out will consist of only paving half of a crossroad intersection and allowing through traffic on the portion left out. The leave out will not be paved until the concrete overlay has attained a flexural strength of 450 psi or a compressive strength of 3,000 psi. The leave out locations are identified in the plans. Include all costs for this work in the unit price bid for "8.5 IN Non-Reinf Concrete Pvmt CL AE-Doweled."

550-P02 CORRECTIVE ACTION: The Engineer will collect a second profile a maximum of 5 working days after the completion of corrective action. If additional corrective action is necessary, the Engineer will apply a liquidated damage of $1,500 per trip for each profile collected after the second profile.

704-100 TRAFFIC CONTROL SUPERVISOR: Provide a Traffic Control Supervisor.

704-255 TRAFFIC CONTROL FOR SHOULDER DROP-OFF: If the shoulder and adjacent driving lane are not even at the end of the day, the following criteria will apply:

Place the following sign assembly at the locations listed below.

Sign Assembly: Sign No. W8-9a-48 “Shoulder Drop Off” and supplemental plate Sign No. W20-52-54 to identify the distance.

Locations:

- In advance of the drop off;
- Spaced at each mile from the advance sign; and
- At major intersections (CMC routes, state and US Highways, and Interstate Ramps).

If the difference in elevation between the shoulder and the driving lane is 2” or greater, construct a slough on the driving lane that is 4:1 or flatter.

If the difference in elevation between the shoulder and driving lane is less than 2”, no slough is required.

Sign assemblies will be measured and paid for according to Section 704 “Temporary Traffic Control”.

This document was originally issued and sealed by William Doerr, Registration Number PE-7113, on 2/1/16 and the original document is stored at the North Dakota Department of Transportation

Revised	1/22/16	STATE	PROJECT NO.	SECTION	SHEET
Revised	2/1/16	ND	SOIB-7-058(013)000	8	1

ESTIMATE OF QUANTITIES

SPEC	CODE	ITEM DESCRIPTION	UNIT	MAINLINE	TOTAL
103	0100	CONTRACT BOND	L SUM	1	1
103	0200	ESCROW OF BID DOCUMENTATION	L SUM	1	1
107	0100	RAILWAY PROTECTION INSURANCE	L SUM	1	1
201	0330	CLEARING & GRUBBING	L SUM	1	1
202	0112	REMOVAL OF CONCRETE	SY	147	147
202	0115	REMOVAL OF CONCRETE-SITE 1	L SUM	1	1
202	0116	REMOVAL OF CONCRETE-SITE 2	L SUM	1	1
202	0123	REMOVE & SALVAGE AGGREGATE BASE	TON	16,920	16,920
202	0135	REMOVAL OF BITUMINOUS SURFACING	TON	4,783	4,783
202	0169	REMOVAL OF END SECTION-ALL TYPES & SIZES	EA	29	29
202	0174	REMOVAL OF PIPE ALL TYPES AND SIZES	LF	3,584	3,584
203	0101	COMMON EXCAVATION-TYPE A	CY	29,723	29,723
203	0108	TOPSOIL-BORROW AREA	CY	16,100	16,100
203	0109	TOPSOIL	CY	60,736	60,736
203	0121	TOPSOIL-WETLAND	CY	782	782
203	0113	COMMON EXCAVATION-WASTE	CY	38,653	38,653
203	0140	BORROW-EXCAVATION	CY	194,906	194,906
210	0051	BOX CULVERT EXCAVATION - SITE 1	EA	1	1
210	0052	BOX CULVERT EXCAVATION - SITE 2	EA	1	1
210	0202	FOUNDATION PREPARATION-SITE 1	L SUM	1	1
210	0203	FOUNDATION PREPARATION-SITE 2	L SUM	1	1
210	0210	FOUNDATION FILL	CY	188	188
216	0100	WATER	M GAL	5,332	5,332
220	0100	PREPARE STOCKPILE SITE	L SUM	1	1
220	0200	RESTORE STOCKPILE SITE	L SUM	1	1
251	0200	SEEDING CLASS II	ACRE	115	115
251	1000	WETLAND SEED	ACRE	5	5
251	2000	TEMPORARY COVER CROP	ACRE	120	120
253	0101	STRAW MULCH	ACRE	240	240
255	0103	ECB TYPE 3	SY	461	461
256	0200	RIPRAP GRADE II	CY	260	260
260	0200	SILT FENCE SUPPORTED	LF	5,940	5,940
260	0201	REMOVE SILT FENCE SUPPORTED	LF	5,940	5,940
261	0112	FIBER ROLLS 12IN	LF	95,855	95,855
261	0113	REMOVE FIBER ROLLS 12IN	LF	49,490	49,490
262	0100	FLOTATION SILT CURTAIN	LF	80	80
262	0101	REMOVE FLOTATION SILT CURTAIN	LF	80	80
302	0100	SALVAGED BASE COURSE	TON	116,545	116,545
302	0316	TRAFFIC SERVICE GRAVEL	CY	200	200
306	0510	FULL DEPTH RECLAMATION	SY	141,782	141,782
401	0050	TACK COAT	GAL	9,477	9,477
401	0060	PRIME COAT	GAL	18,082	18,082
401	0160	BLOTTER MATERIAL CL44	TON	545	545
411	0105	MILLING PAVEMENT SURFACE	SY	1,200	1,200
430	0045	SUPERPAVE FAA 45	TON	28,972	28,972
430	5828	PG 58-28 ASPHALT CEMENT	TON	1,276	1,276
430	6434	PG 64-34 ASPHALT CEMENT	TON	442	442
430	1000	CORED SAMPLE	EA	88	88
550	0302	8.5IN NON-REINF CONCRETE PVMT CL AE-DOWELED	SY	123,723	123,723
602	0130	CLASS AAE-3 CONCRETE	CY	87.1	87.1
602	1131	CLASS AE-3 CONCRETE-BOX CULVERT	CY	144.6	144.6

Revised	1/20/16	STATE	PROJECT NO.	SECTION NO.	SHEET NO.
Revised	2/01/16	ND	SOIB-7-058(013)000	11	1

Alignment	Common Excavation Type A (CY) Pay Item	Embankment (CY)	Common Excavation Waste (CY) Pay Item	Borrow Excavation (CY) Pay Item	Topsoil (CY) Pay Item
ND 58 Finished Width	29,723	185,976	0	156,253	59,067
ND 58 Temporary Widening	0	38,653	38,653	38,653	2,451
Totals =	**29,723**	**224,629**	**38,653**	**194,906**	**61,518**

Note: 25 percent additional volume is included for shrinkage in earth embankment.

This document was originally issued and sealed by William Doerr, Registration Number PE- 7113, on 2/01/16 and the original document is stored at the North Dakota Department of Transportation

Earthwork Summary

ND 58

Jct 200 to Jct 1804

Added 2/01/16	STATE	PROJECT NO.	SECTION NO.	SHEET NO.
	ND	SOIB-7-058(013)000	11	6A

Temporary Widening Earthwork Values

	Embankment End Area	Embankment Volume	Topsoil End Area	Topsoil Volume
	Embankment		Topsoil	
	End Area (SF)	Volume (CY)	End Area (SF)	Volume (CY)
5+00	31.4	0.00	3.7	0.00
6+00	45.3	177.55	11.8	28.70
7+00	44.3	207.41	4.8	30.74
8+00	51.1	220.83	4.1	16.48
8+94	43.0	204.75	2.9	12.19
9+00	42.3	11.85	2.7	0.62
10+00	41.9	194.91	3.3	11.11
11+00	36.4	181.25	2.7	11.11
12+00	30.1	153.94	2.6	9.81
13+00	25.7	129.17	1.4	7.41
14+00	11.8	86.81	1.8	5.93
15+00	18.3	69.68	0.8	4.81
16+00	11.8	69.68	0.1	1.67
54+00	2.7	0.00	0.1	0.00
55+00	2.8	12.73	0.1	0.37
56+00	2.8	12.96	0.1	0.37
80+00	13.8	0.00	0.6	0.00
81+00	16.4	69.91	0.9	2.78
82+00	22.3	89.58	1.0	3.52
83+00	28.2	116.90	0.6	2.96
83+09	28.9	11.90	0.8	0.23
83+39	33.1	43.06	1.4	1.22
84+00	37.7	99.97	2.7	4.63
84+89	41.9	163.99	5.8	14.01
85+00	43.2	21.67	6.4	2.49
85+59	45.7	121.41	6.9	14.53
86+00	0.0	43.37	0.0	5.24
87+00	46.3	107.18	5.9	10.93
88+00	48.3	218.98	6.6	23.15
89+00	52.3	232.87	7.1	25.37
90+00	41.9	218.06	6.5	25.19
91+00	44.6	200.23	6.9	24.81
92+00	38.3	191.90	9.4	30.19
93+00	30.2	158.56	5.5	27.59
94+00	27.8	134.26	7.3	23.70
95+00	27.3	127.55	6.9	26.30
96+00	33.6	140.97	5.9	23.70
97+00	38.3	166.44	6.0	22.04
98+00	47.7	199.07	4.6	19.63
99+00	57.3	243.06	6.1	19.81
100+00	64.9	282.87	4.5	19.63
101+00	67.9	307.41	4.6	16.85

Temporary Widening Earthwork Values

	Embankment End Area	Embankment Volume	Topsoil End Area	Topsoil Volume
102+00	73.8	328.01	4.2	16.30
103+00	74.8	343.98	4.9	16.85
104+00	77.4	352.31	5.6	19.44
105+00	62.6	324.07	6.9	23.15
106+00	22.6	197.22	8.0	27.59
106+18	28.2	21.17	7.7	5.23
107+00	51.8	151.85	5.3	19.74
108+00	66.3	273.38	4.5	18.15
109+00	64.0	301.62	2.2	12.41
110+00	64.6	297.69	3.5	10.56
111+00	69.2	309.72	4.5	14.81
111+48	71.3	156.11	5.2	8.62
111+78	70.8	98.68	5.7	6.06
112+00	71.3	72.37	6.1	4.81
113+00	61.8	308.10	5.4	21.30
113+28	62.5	80.56	5.1	5.44
114+00	61.7	207.00	4.5	12.80
115+00	55.8	271.99	4.9	17.41
116+00	51.4	248.15	4.5	17.41
117+00	49.5	233.56	6.0	19.44
118+00	46.0	221.06	6.5	23.15
119+00	43.3	206.71	6.9	24.81
120+00	40.2	193.29	4.4	20.93
121+00	45.2	197.69	3.9	15.37
122+00	44.8	208.33	3.9	14.44
123+00	41.5	199.77	3.7	14.07
124+00	39.7	187.96	3.4	13.15
125+00	35.1	173.15	3.7	13.15
126+00	35.4	163.19	3.5	13.33
127+00	36.3	165.97	3.8	13.52
128+00	32.9	160.19	4.4	15.19
129+00	27.3	139.35	6.1	19.44
130+00	26.6	124.77	5.8	22.04
131+00	27.7	125.69	7.3	24.26
132+00	0.0	64.12	0.0	13.52
133+00	37.4	86.57	6.3	11.67
134+00	35.3	168.29	5.6	22.04
135+00	32.5	156.94	6.2	21.85
136+00	30.2	145.14	6.1	22.78
137+00	27.5	133.56	6.4	23.15
138+00	25.9	123.61	6.9	24.63
139+00	23.7	114.81	7.2	26.11
140+00	27.2	117.82	6.6	25.56
141+00	30.4	133.33	6.2	23.70
142+00	30.3	140.51	4.8	20.37
143+00	44.2	172.45	4.4	17.04
144+00	49.0	215.74	4.5	16.48
145+00	27.9	178.01	7.0	21.30

Temporary Widening Earthwork Values

	Embankment End Area	Embankment Volume	Topsoil End Area	Topsoil Volume
146+00	32.7	140.28	3.1	18.70
147+00	68.8	234.95	4.9	14.81
148+00	63.2	305.56	5.1	18.52
149+00	65.2	297.22	5.6	19.81
150+00	64.8	300.93	11.5	31.67
151+00	22.9	203.01	4.7	30.00
152+00	35.9	136.11	4.0	16.11
153+00	35.5	165.28	3.8	14.44
154+00	37.2	168.29	4.1	14.63
155+00	45.6	191.67	3.5	14.07
156+00	48.1	216.90	3.4	12.78
156+59	49.0	132.61	3.5	7.54
157+00	51.7	95.57	3.2	5.09
158+00	50.9	237.50	3.2	11.85
159+00	45.2	222.45	0.0	5.93
160+00	41.1	199.77	0.0	0.00
161+00	35.7	177.78	0.0	0.00
162+00	27.7	146.76	0.0	0.00
163+00	22.8	116.90	0.0	0.00
164+00	15.7	89.12	0.0	0.00
165+00	20.3	83.33	0.0	0.00
166+00	25.0	104.86	0.0	0.00
166+79	28.8	98.38	0.0	0.00
167+00	33.0	30.04	0.0	0.00
167+31	34.9	48.72	0.0	0.00
168+00	37.3	115.32	0.0	0.00
168+72	37.6	124.83	2.7	3.60
169+00	11.9	32.08	5.4	4.20
170+00	35.3	109.26	10.3	29.07
171+00	75.2	255.79	7.5	32.96
172+00	75.2	348.15	8.1	28.89

This document was originally issued and sealed by William Doerr, Registration Number PE-7113, on 2/01/16 and the original document is stored at the North Dakota Department of Transportation.

Earthwork Values

ND 58

Jct 200 to Jct 1804

Added 2/01/16	STATE	PROJECT NO.	SECTION NO.	SHEET NO.
	ND	SOIB-7-058(013)000	11	6B

Temporary Widening Earthwork Values

	Embankment		Topsoil	
	End Area	Volume	End Area	Volume
175+00	87.1	399.07	3.8	14.44
176+00	88.6	406.71	4.0	14.44
177+00	90.1	413.66	4.4	15.56
178+00	92.7	423.15	4.9	17.22
179+00	91.4	426.16	4.1	16.67
180+00	95.1	431.71	3.5	14.07
181+00	98.8	448.84	3.3	12.59
182+00	96.6	452.31	3.7	12.96
182+77	95.2	341.87	4.0	10.98
183+00	94.4	100.94	4.2	3.49
184+00	96.4	441.67	4.1	15.37
185+00	0.0	223.15	0.0	7.59
186+00	82.4	190.74	18.0	33.33
186+27	80.3	101.69	16.1	17.05
187+00	93.9	294.37	15.3	42.45
188+00	86.2	416.90	5.4	38.33
189+00	87.1	401.16	4.9	19.07
190+00	80.5	387.96	4.9	18.15
191+00	70.4	349.31	5.3	18.89
192+00	58.5	298.38	7.1	22.96
193+00	53.9	260.19	6.4	25.00
193+51	52.8	125.97	6.1	11.81
194+00	58.8	126.58	7.5	12.34
195+00	51.3	254.86	5.7	24.44
195+37	41.7	79.65	5.3	7.54
196+00	30.3	105.00	4.5	11.43
197+00	0.0	70.14	0.0	8.33
198+00	26.2	60.65	1.3	2.41
199+00	15.7	96.99	5.1	11.85
200+00	50.9	154.17	5.0	18.70
201+00	4.8	128.94	1.5	12.04
202+00	19.7	56.71	2.1	6.67
203+00	7.0	61.81	0.0	3.89
317+78	8.5	6252.62	0.0	0.00
318+00	11.3	10.08	0.0	0.00
319+00	16.4	64.12	0.0	0.00
320+00	23.6	92.59	0.0	0.00
321+00	33.2	131.48	0.0	0.00
322+00	35.8	159.72	0.0	0.00
323+00	39.6	174.54	0.0	0.00
323+08	39.5	14.65	0.0	0.00
323+38	39.5	54.86	0.0	0.00
324+00	44.1	119.98	0.0	0.00
324+28	47.2	59.18	0.0	0.00
324+88	44.7	127.64	3.8	4.22
325+00	43.9	24.61	4.2	1.78
325+58	48.8	124.46	4.7	9.56

Temporary Widening Earthwork Values

	Embankment		Topsoil	
	End Area	Volume	End Area	Volume
326+00	52.6	98.58	5.0	7.54
327+00	56.5	252.55	4.1	16.85
328+00	55.5	259.26	4.2	15.37
329+00	55.6	257.18	3.4	14.07
330+00	58.5	264.12	3.9	13.52
331+00	55.2	263.19	3.9	14.44
332+00	52.5	249.31	5.1	16.67
333+00	58.8	257.64	3.8	16.48
334+00	61.3	278.01	3.9	14.26
335+00	61.8	284.95	3.3	13.33
Totals		38,653		2,451

This document was originally issued and sealed by William Doerr, Registration Number PE-7113, on 2/01/16 and the original document is stored at the North Dakota Department of Transportation.

Earthwork Values

ND 58

Jct 200 to Jct 1804

Revised	1/20/16	STATE	PROJECT NO.	SECTION NO.	SHEET NO.
Revised	2/01/16	ND	SOIB-7-058(013)000	50	2

BAR LIST - DISTRIBUTION BOX
STATION 76+29 RT

SIZE	MARK	NO.	LENGTH	SHAPE
4	C1	2	4'-7"	BENT
4	C2	4	9'-2"	BENT
4	D1	16	2'-6"	STR.
5	D2	18	2'-2"	STR.
4	H1	5	7'-5"	BENT
4	H2	5	7'-7"	BENT
4	H3	5	12'-8"	BENT
4	H4	5	13'-4"	BENT
4	H5	5	7'-10"	BENT
4	H6	5	8'-2"	BENT
4	H7	5	5'-4"	BENT
4	H8	5	5'-7"	BENT
4	H9	14	12'-4"	STR.
5	H10	10	7'-4"	STR.
5	H11	18	6'-2"	STR.
4	H12	1	4'-2"	STR.
4	H13	4	8'-6"	BENT
4	H14	2	7'-2"	STR.
4	L1	4	4'-0"	BENT
5	V1	50	8'-8"	BENT
4	V2	27	6'-7"	BENT

Note: Drill and epoxy all D1 dowels into the existing walls. Center dowels on the existing box wall.

Epoxy to meet the requirements of Section 806.

DESIGN STRENGTHS:

f'c = 4,000 psi ~ Class AAE-3 Concrete
fy = 60,000 psi ~ Reinforcing Steel

Load & Resistance Factor Design

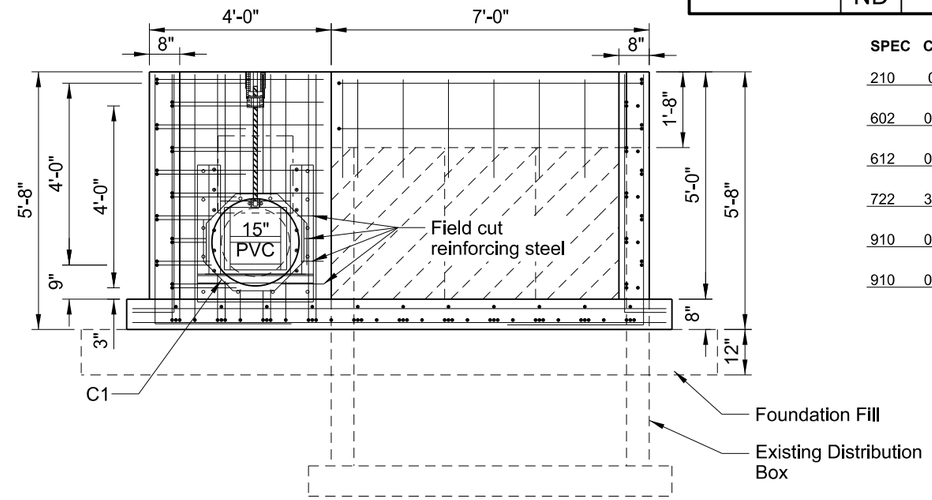

Section B-B

SPEC	CODE	BID ITEM	QUANTITY	UNIT
210	0210	FOUNDATION FILL		
		76+29 RT	4.9	CY
602	0130	CLASS AAE-3 CONCRETE		
		76+29 RT	6.0	CY
612	0115	REINFORCING STEEL - GRADE 60		
		76+29 RT	1,238	LBS
722	3453	GRATE - TYPE 1		
		76+29 RT	1	EA
910	0695	SLUICE GATE 15 IN		
		76+29 RT	1	EA
910	0702	SLUICE GATE 42		
		76+29 RT	1	EA

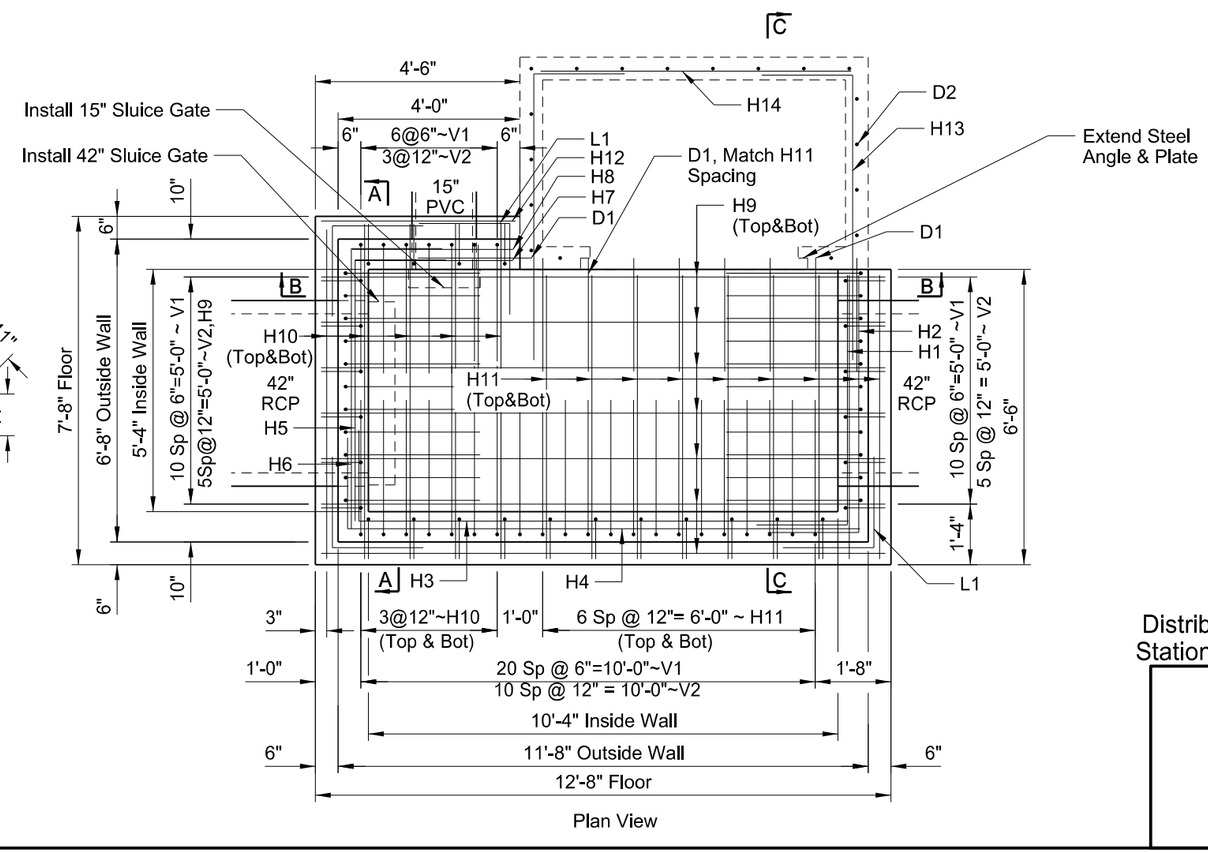

Plan View

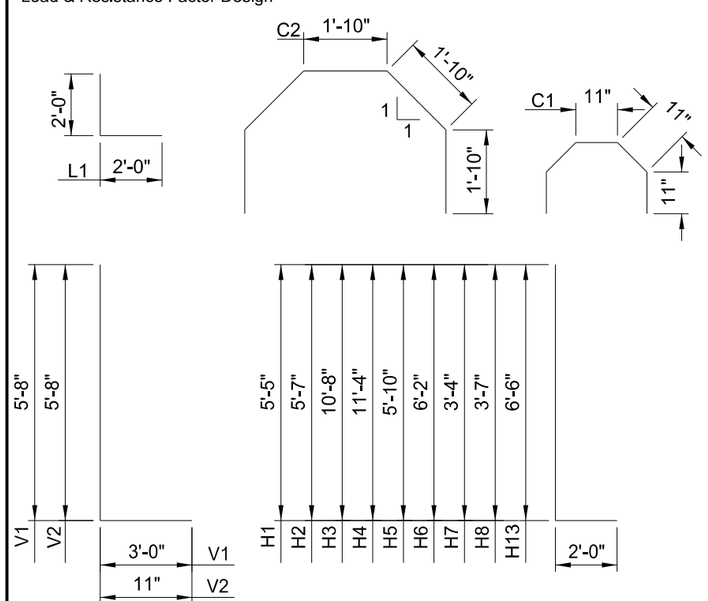

This document was originally issued and sealed by William Doerr, Registration Number PE- 7113, on 2/01/16 and the original document is stored at the North Dakota Department of Transportation

Distribution Box
Station 76+29 Rt

Irrigation Details

ND 58

Jct 200 to Jct 1804

Added	1/20/16	STATE	PROJECT NO.	SECTION NO.	SHEET NO.
Revision	2/01/16	ND	SOIB-7-058(013)000	50	2B

BAR LIST - DISTRIBUTION BOX
STATION 163+25 Rt

SIZE	MARK	NO.	LENGTH	SHAPE
4	C1	2	4'-7"	BENT
4	C2	2	12'-9"	BENT
4	H1	12	6'-8"	STR.
4	H2	9	9'-4"	STR.
4	H3	14	7'-6"	BENT
4	H4	14	10'-6"	BENT
4	H5	14	7'-0"	BENT
4	H6	14	10'-0"	BENT
5	V1	30	11'-10"	BENT
4	V2	26	8'-1"	BENT
5	V3	18	13'-4"	BENT

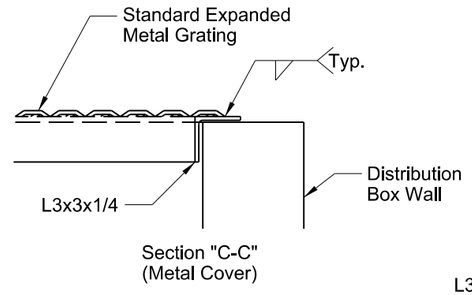

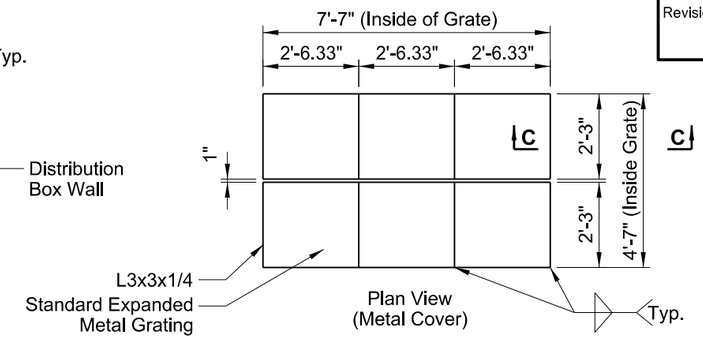

SPEC	CODE	BID ITEM	QUANTITY	UNIT
210	0210	FOUNDATION FILL		
		163+25 Rt	4.0	CY
602	0130	CLASS AAE-3 CONCRETE		
		163+25 Rt	6.5	CY
612	0115	REINFORCING STEEL - GRADE 60		
		163+25 Rt	1,221	LBS
722	3453	GRATE - TYPE 1		
		163+25 Rt	1	EA
910	0695	SLUICE GATE 15IN		
		163+25 Rt	1	EA

DESIGN STRENGTHS:

f'c = 4,000 psi ~ Class AAE-3 Concrete
fy = 60,000 psi ~ Reinforcing Steel

Load & Resistance Factor Design

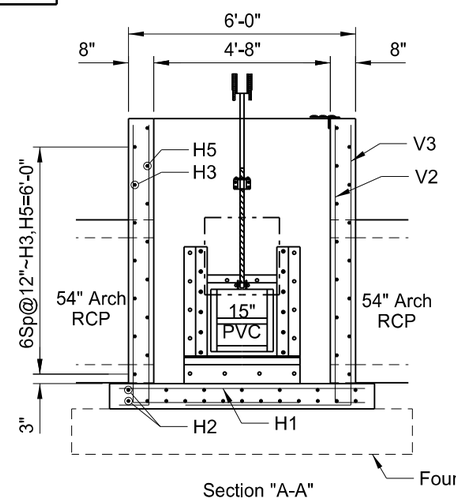

Section "A-A"

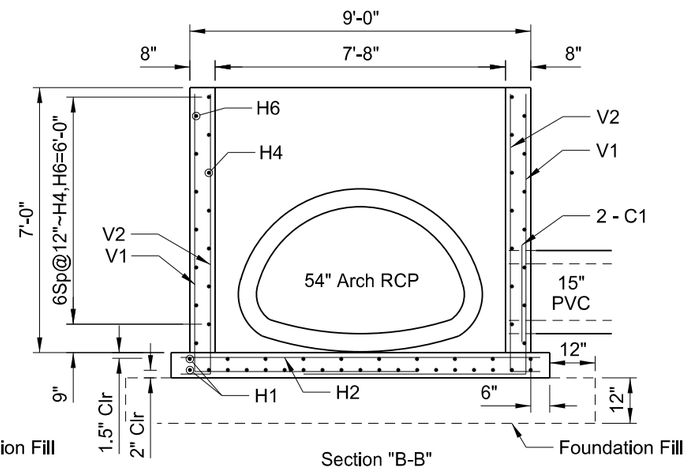

Section "B-B"

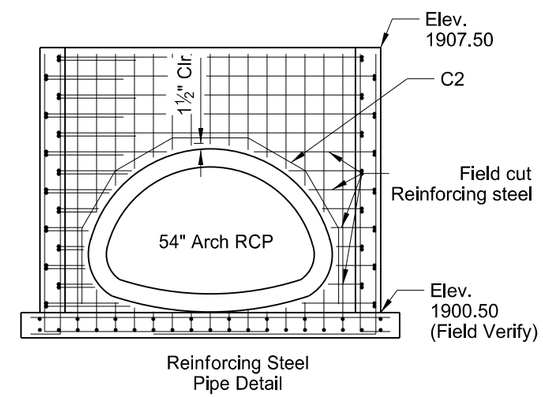

Reinforcing Steel Pipe Detail

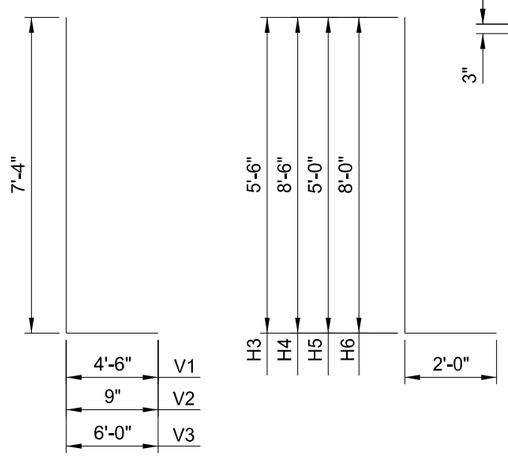

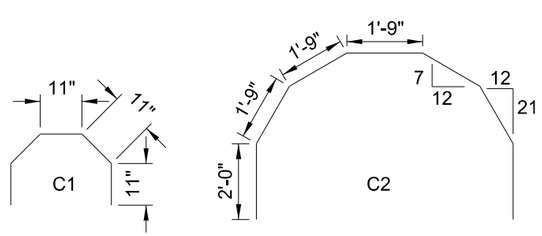

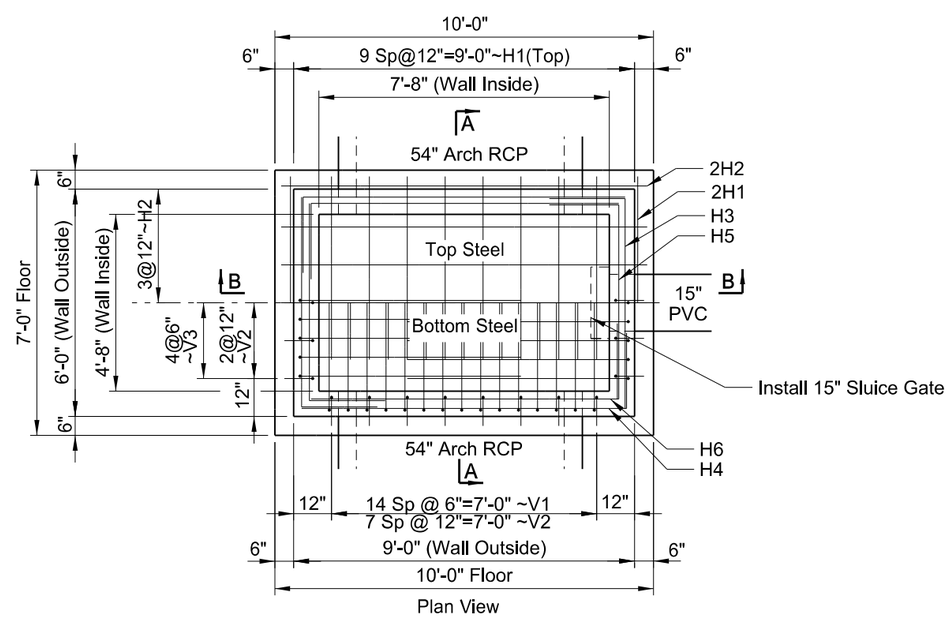

Plan View

Distribution Box
Station 163+25 Rt

This document was originally issued and sealed by William Doerr, Registration Number PE- 7113, on 2/01/16 and the original document is stored at the North Dakota Department of Transportation

Irrigation Details

ND 58

Jct 200 to Jct 1804

Revision 2/01/16	STATE	PROJECT NO.	SECTION NO.	SHEET NO.
	ND	SOIB-7-058(013)000	50	3

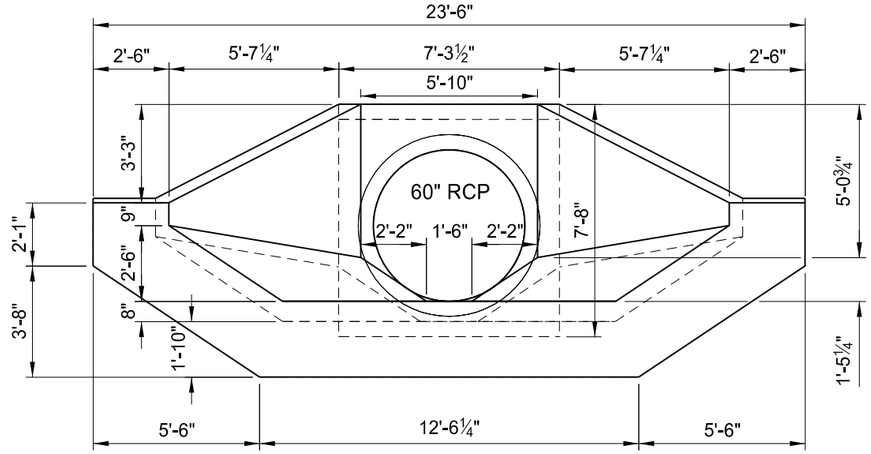

End View
(Showing Dimensions)

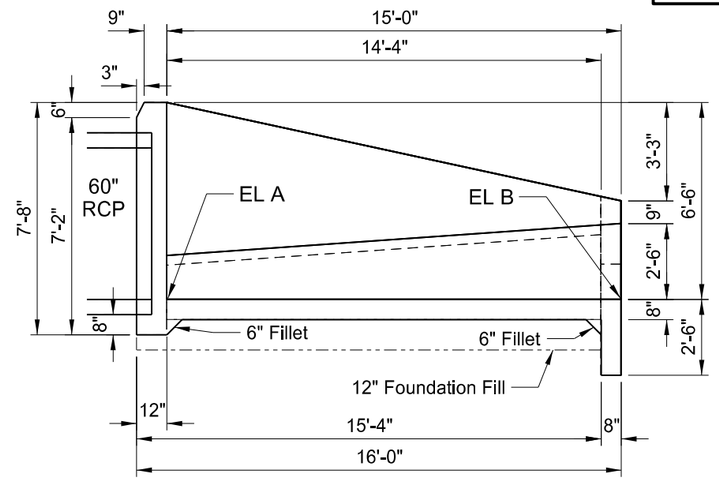

Sec. A-A
(Showing Dimensions)

SPEC	CODE	BID ITEM	QUANTITY	UNIT
210	0210	FOUNDATION FILL		
		Sta 26+25 Lt	4.4	CY
		Sta 26+25 Rt	4.4	CY
		Sta 106+12 Lt	4.4	CY
602	0130	CLASS AAE-3 CONCRETE		
		Sta 26+25 Lt	9.6	CY
		Sta 26+25 Rt	9.6	CY
		Sta 106+12 Lt	9.6	CY
612	0115	REINFORCING STEEL - GRADE 60		
		Sta 26+25 Lt	1,409	LBS
		Sta 26+25 Rt	1,409	LBS
		Sta 106+12 Lt	1,409	LBS

Lateral "N"
Sta 26+25 Lt
Sta 26+25 Rt

Lateral "P"
Sta 106+12 Lt

DESIGN STRENGTHS:

f'c = 4,000 psi ~ Class AAE-3 Concrete
fy = 60,000 psi ~ Reinforcing Steel

Load & Resistance Factor Design

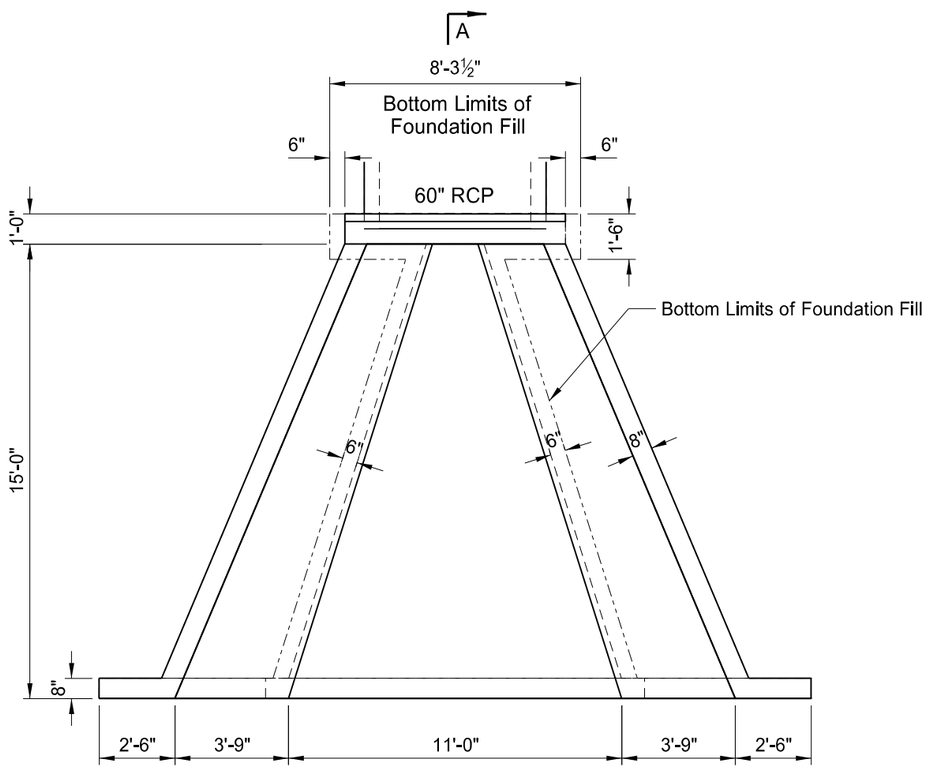

Plan View
(Showing Dimensions)

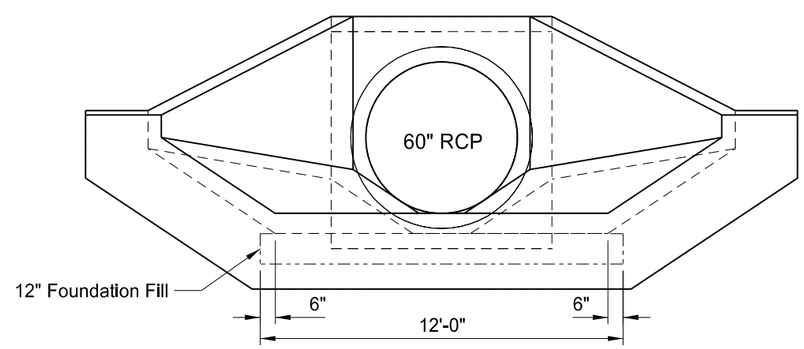

End View
(Foundation Fill Detail)

* Verify Elevations in Field

Lateral "N"	Elev "A"	Elev "B"
Sta 26+25 Lt	1900.22	1900.26
Sta 26+25 Rt	1899.51	1900.31
Lateral "P"		
Sta 106+12 Lt	1916.37	1916.39

This document was originally issued and sealed by William Doerr, Registration Number PE- 7113, on 2/01/16 and the original document is stored at the North Dakota Department of Transportation

Irrigation Details

ND 58

Jct 200 to Jct 1804

Revision 2/01/16	STATE	PROJECT NO.	SECTION NO.	SHEET NO.
	ND	SOIB-7-058(013)000	50	5

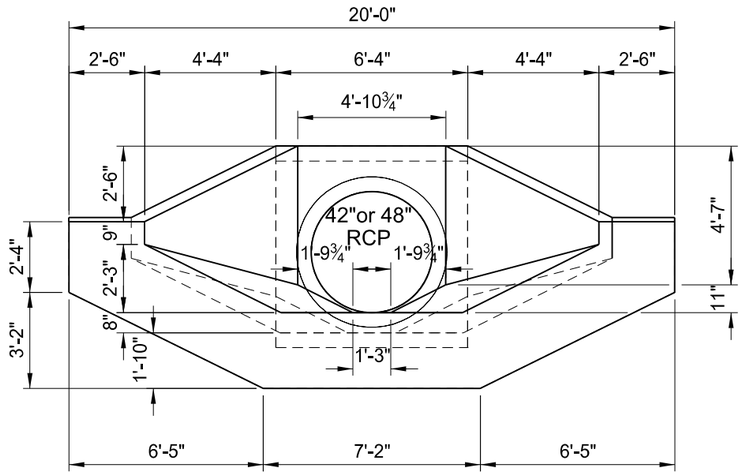

End View
(Showing Dimensions)

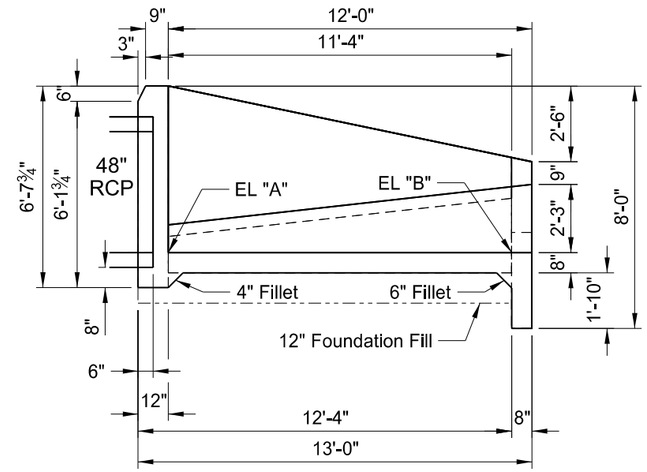

Sec. A-A
(Showing Dimensions)

SPEC	CODE	BID ITEM	QUANTITY	UNIT
210	0210	FOUNDATION FILL		
		Sta 79+09 Rt	2.4	CY
		Sta 150+44 Lt	2.4	CY
		Sta 206+76 Lt	2.4	CY
		Sta 209+45 Rt	2.4	CY
		Sta 283+42 Rt	2.4	CY
602	0130	CLASS AAE-3 CONCRETE		
		Sta 79+09 Rt	6.8	CY
		Sta 150+44 Lt	6.8	CY
		Sta 206+76 Lt	6.8	CY
		Sta 209+45 Rt	6.8	CY
		Sta 283+42 Rt	6.8	CY
612	0115	REINFORCING STEEL - GRADE 60		
		Sta 79+09 Rt	991	LBS
		Sta 150+44 Lt	991	LBS
		Sta 206+76 Lt	991	LBS
		Sta 209+45 Rt	991	LBS
		Sta 283+42 Rt	991	LBS

Lateral "O"
Sta 79+09 Rt

Lateral "Q"
Sta 150+44 Lt
Sta 206+76 Lt
Sta 209+45 Rt

Lateral "S"
Sta 283+42 Rt

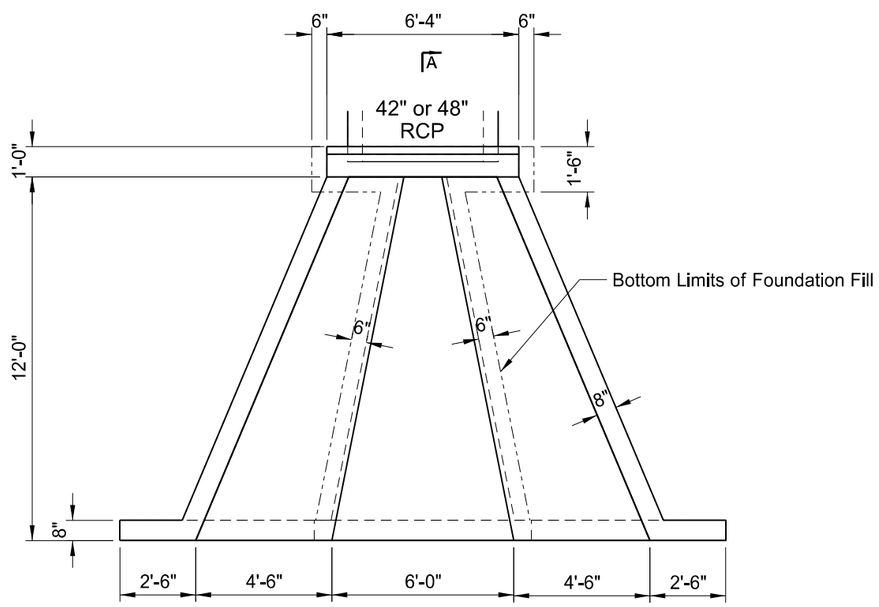

A

Plan View
(Showing Dimensions)

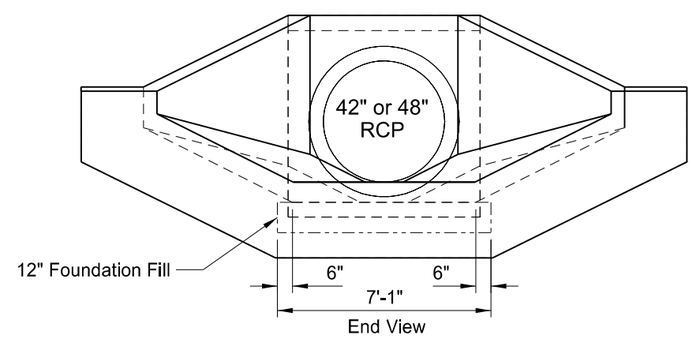

End View
(Foundation Fill Detail)

DESIGN STRENGTHS:

f'c = 4,000 psi ~ Class AAE-3 Concrete
fy = 60,000 psi ~ Reinforcing Steel

Load & Resistance Factor Design

* Verify Elevations in Field

Lateral "O"	Elev "A"	Elev "B"
Sta 79+09 Rt	1911.35	1911.25
Lateral "Q"		
Sta 150+44 Lt	1904.17	1905.32
Sta 206+76 Lt	1895.13	1895.67
Sta 209+45 Rt	1893.46	1894.46
Lateral "S"		
Sta 283+42 Rt	1892.04	1891.47

This document was originally issued and sealed by William Doerr, Registration Number PE- 7113, on 2/01/16 and the original document is stored at the North Dakota Department of Transportation

Irrigation Details

ND 58

Jct 200 to Jct 1804

Revision 2/01/16	STATE	PROJECT NO.	SECTION NO.	SHEET NO.
	ND	SOIB-7-058(013)000	50	7

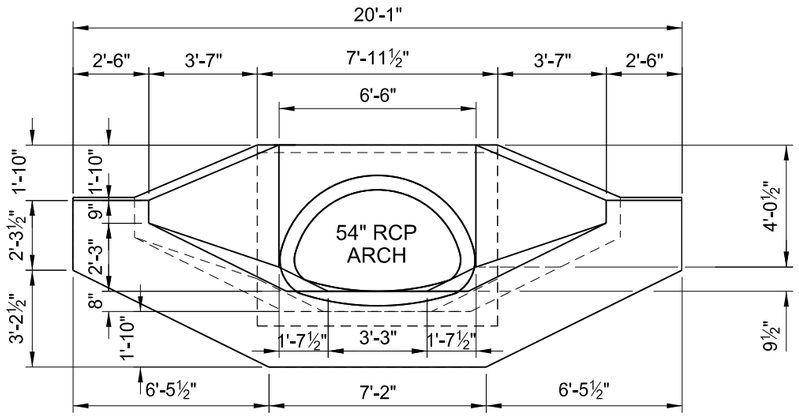

End View
(Showing Dimensions)

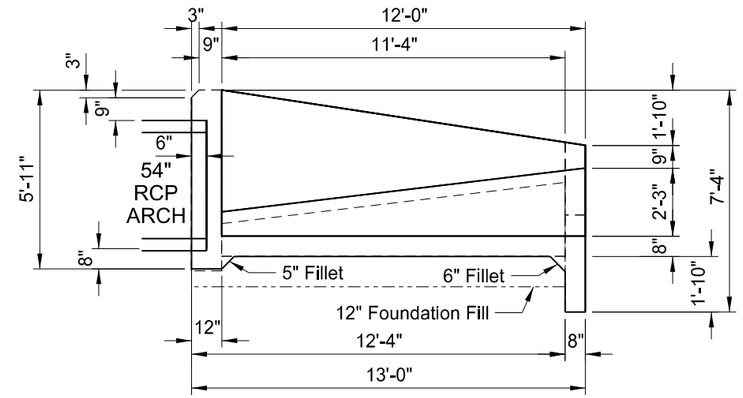

Sec. A-A
(Showing Dimensions)

SPEC	CODE	BID ITEM	QUANTITY	UNIT
210	0210	FOUNDATION FILL Sta 166+53 Rt	2.9	CY
602	0130	CLASS AAE-3 CONCRETE Sta 166+53 Rt	7.0	CY
612	0115	REINFORCING STEEL - GRADE 60 Sta 166+53 Rt	982	LBS

Lateral "Q"
Sta 166+53 Rt

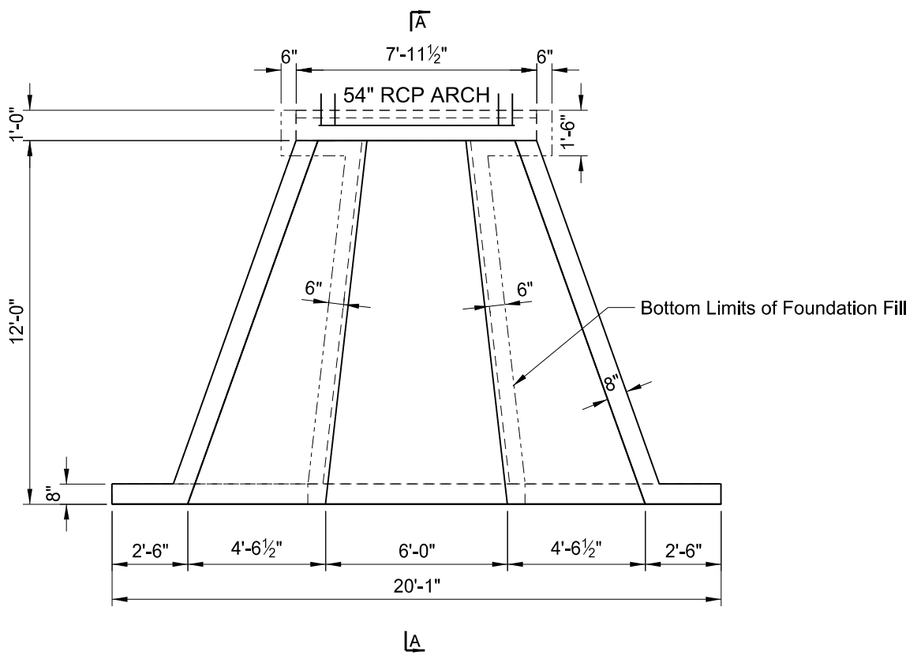

Plan View
(Showing Dimensions)

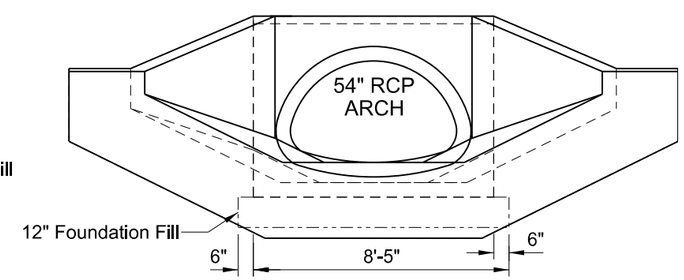

End View
(Foundation Fill Detail)

DESIGN STRENGTHS:

f'c = 4,000 psi ~ Class AAE-3 Concrete
fy = 60,000 psi ~ Reinforcing Steel

Load & Resistance Factor Design

This document was originally issued and sealed by William Doerr, Registration Number PE- 7113, on 2/01/16 and the original document is stored at the North Dakota Department of Transportation

Note: Tie into Existing Irrigation Structure at 158+11 RT

* Verify Elevations in Field

Lateral "Q"	Elev "A"	Elev "B"
Sta 158+11 Rt	*	*
Sta 166+53 Rt	1900.84	1900.70

Irrigation Details

ND 58

Jct 200 to Jct 1804

Revision 2/01/16	STATE	PROJECT NO.	SECTION NO.	SHEET NO.
	ND	SOIB-7-058(013)000	50	9

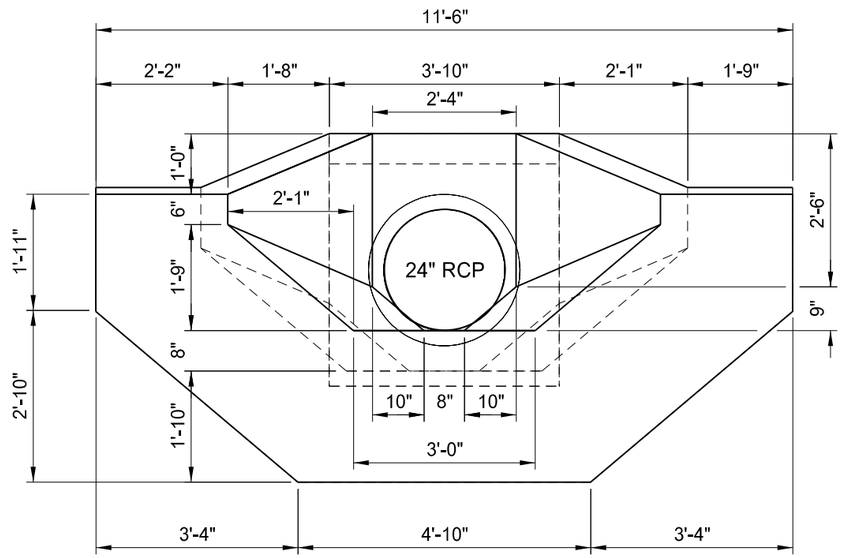

End View
(Showing Dimensions)

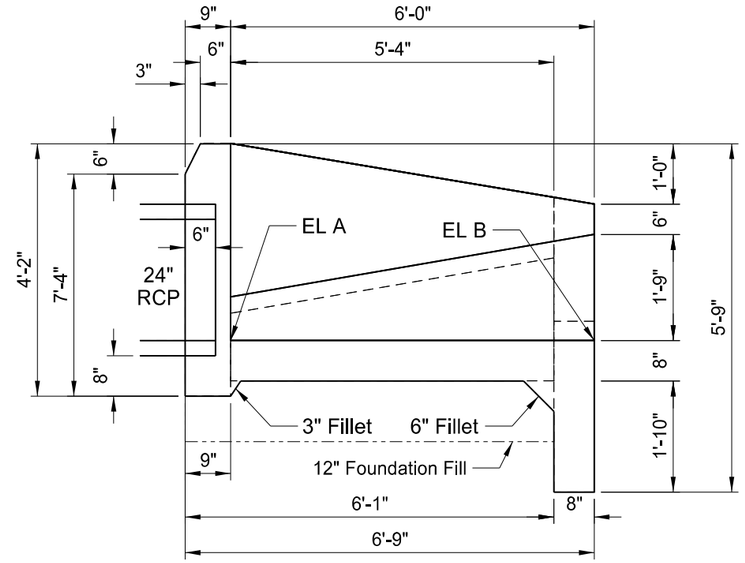

Sec. A-A
(Showing Dimensions)

SPEC	CODE	BID ITEM	QUANTITY	UNIT
210	0210	FOUNDATION FILL		
		384+44 Lt	0.7	CY
		384+44 Rt	0.7	CY
602	0130	CLASS AAE-3 CONCRETE		
		384+44 Lt	2.4	CY
		384+44 Rt	2.4	CY
612	0115	REINFORCING STEEL - GRADE 60		
		384+44 Lt	312	LBS
		384+44 Rt	312	LBS

Lateral "T"
Sta 384+44 Lt & Rt

DESIGN STRENGTHS:

f'c = 4,000 psi ~ Class AAE-3 Concrete
fy = 60,000 psi ~ Reinforcing Steel

Load & Resistance Factor Design

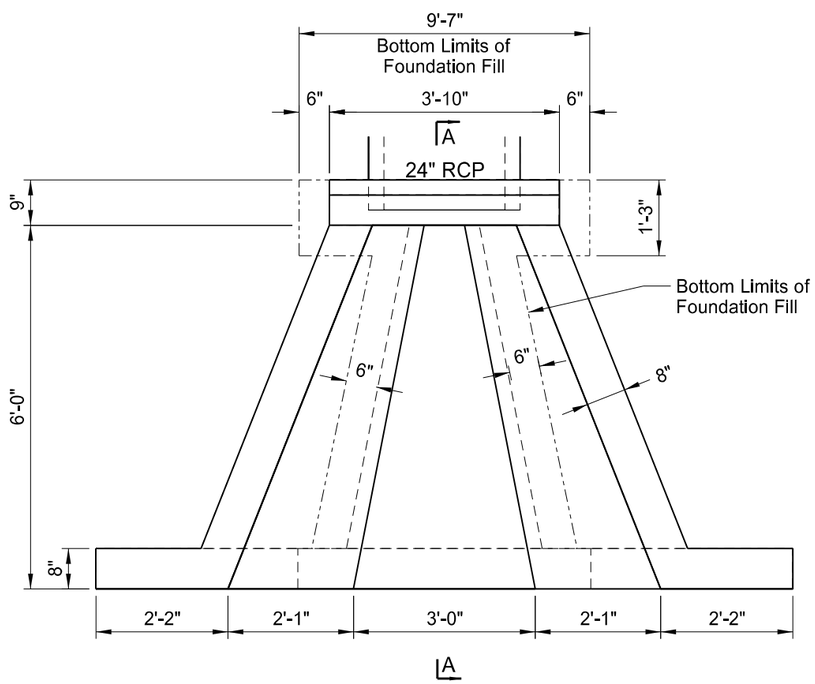

Plan View
(Showing Dimensions)

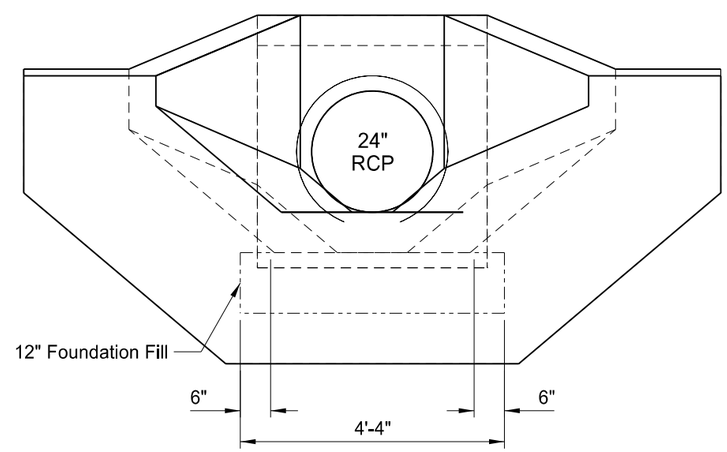

End View
(Foundation Fill Detail)

* Verify Elevations in Field

Lateral "T" Sta 384+44		
	Lt	Rt
EL A	1873.80*	1873.70*
EL B	1873.92*	1873.00*

This document was originally issued and sealed by William Doerr, Registration Number PE- 7113, on 2/01/16 and the original document is stored at the North Dakota Department of Transportation

Irrigation Details

ND 58

Jct 200 to Jct 1804

D-714-11

TRAVERSABLE END SECTIONS FOR CORRUGATED STEEL PIPE CULVERTS

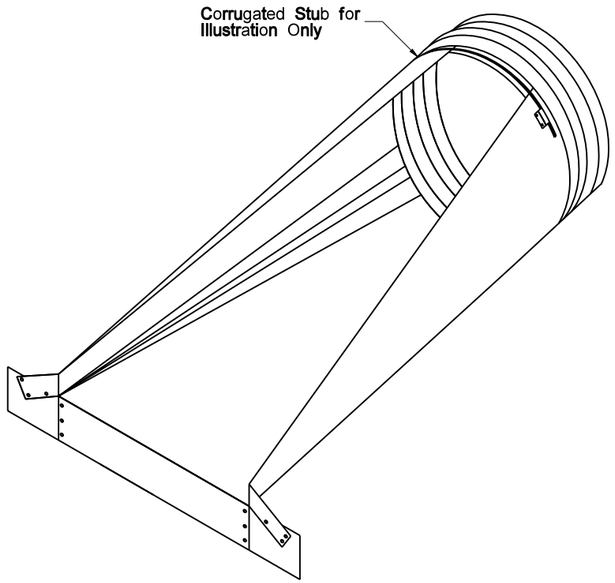

ISOMETRIC VIEW

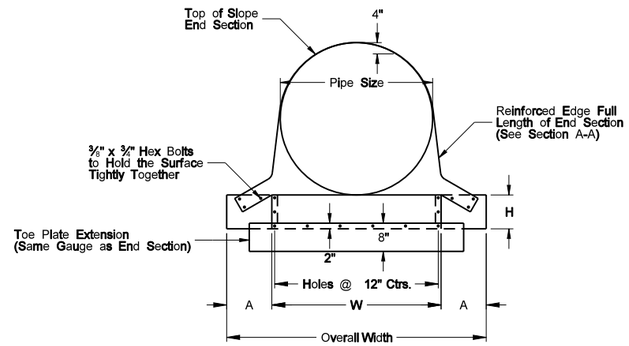

FRONT VIEW CIRCULAR PIPE

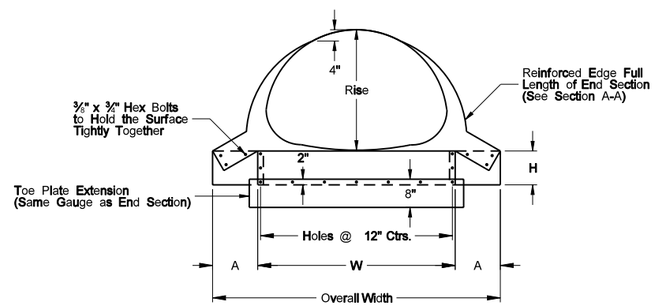

FRONT VIEW ARCHED PIPE

TRAVERSABLE END SECTIONS FOR CIRCULAR PIPES										
Pipe Dia. (in.)	Min. Thick.		Dimensions (inches)				L Dimensions			
	in.	Gauge	A	H	W	Overall Width	Slope	Length (in.)	Slope	Length (in.)
15	.064	16	8	6	21	37	4:1	20	6:1	30
18	.064	16	8	6	24	40	4:1	32	6:1	48
24	.064	16	8	6	30	46	4:1	56	6:1	84
30	.109	12	12	9	36	60	4:1	80	6:1	120

TRAVERSABLE END SECTIONS FOR ARCHED PIPES												
Equiv. Dia. (in.)	(inches)		Min. Thick.		Dimensions (inches)				L Dimensions			
	Span	Rise	in.	Gauge	A	H	W	Overall Width	Slope	Length (in.)	Slope	Length (in.)
18	21	15	.064	16	8	6	27	43	4:1	20	6:1	30
21	24	18	.064	16	8	6	30	46	4:1	32	6:1	48
24	28	20	.064	16	8	6	34	50	4:1	40	6:1	60

Note: See Standard Drawing D-714-04 for end section to pipe details.

For 15", 18" and 24" diameter end sections, 1/2" diameter rod, or strap type connection to corrugated steel pipe shall be used.

For 30" diameter round end sections, rod type connection to corrugated steel pipe, using 5/8" diameter rod shall be used.

For arched pipe end sections (21" X 15" through 28" X 20"), rod type connection to corrugated steel pipe, using 1/2" diameter rod shall be used.

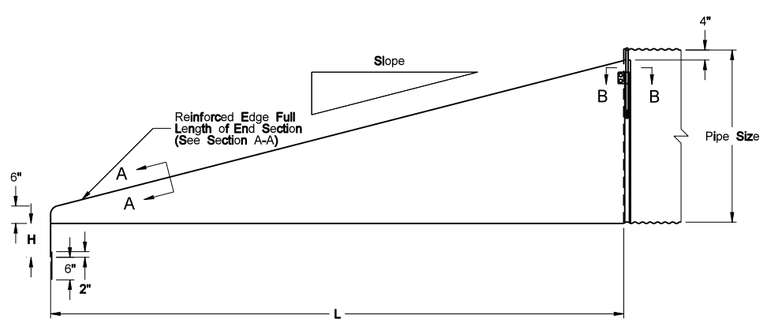

SIDE VIEW

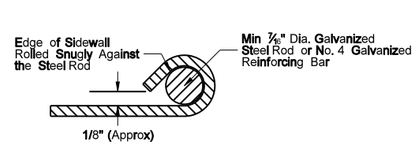

SECTION A-A

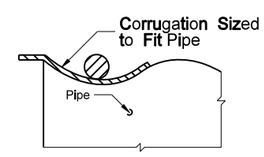

SECTION B-B

NORTH DAKOTA DEPARTMENT OF TRANSPORTATION	
07-23-09	
REVISIONS	
DATE	CHANGE

This document was originally issued and sealed by Terrence R. Udland, Registration Number PE- 2674, on 07/23/09 and the original document is stored at the North Dakota Department of Transportation