LINEAR SOILS SURVEY AND RECOMMENDATIONS

PROJECT NO. IM-8-029(133)078

PCN 18985

COUNTY Cass

Interstate 29 SB RP 79.167 to RP 88.270

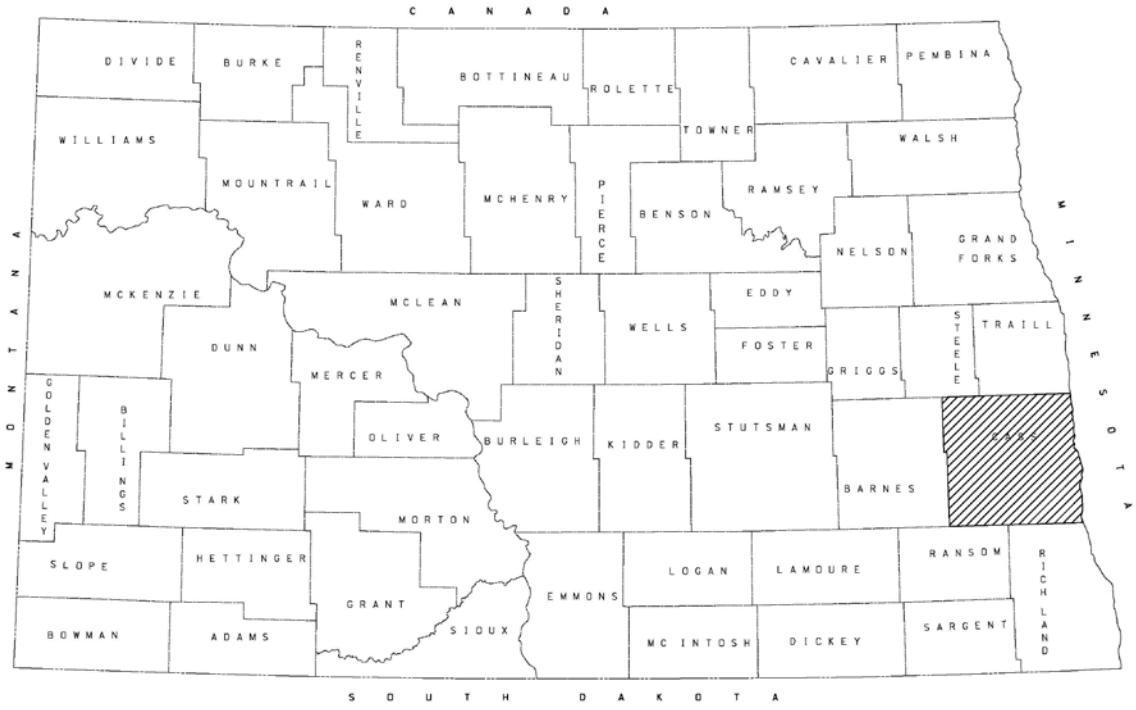

PREPARED BY: Colter Schwagler

NORTH DAKOTA DEPARTMENT OF TRANSPORTATION
MATERIALS AND RESEARCH DIVISION

JANUARY 2014

IM-8-029(133)078

Argusville N to Hunter Separation SB

CERTIFICATION

I hereby certify that this report was prepared by me or under my direct supervision and that I am a duly registered professional engineer under the laws of the State of North Dakota. This document was originally issued and sealed by Mathew C. Kurle, Registration number PE-8782 on 1/31/14 and the original document is stored at the North Dakota Department of Transportation.

REGISTERED PROFESSIONAL ENGINEER
MATTHEW C. KURLE
PE-8777
DATE 1-31-2014
NORTH DAKOTA

Mathew C. Kurle
Mathew C. Kurle, P.E.

31 JAN 2014
Date

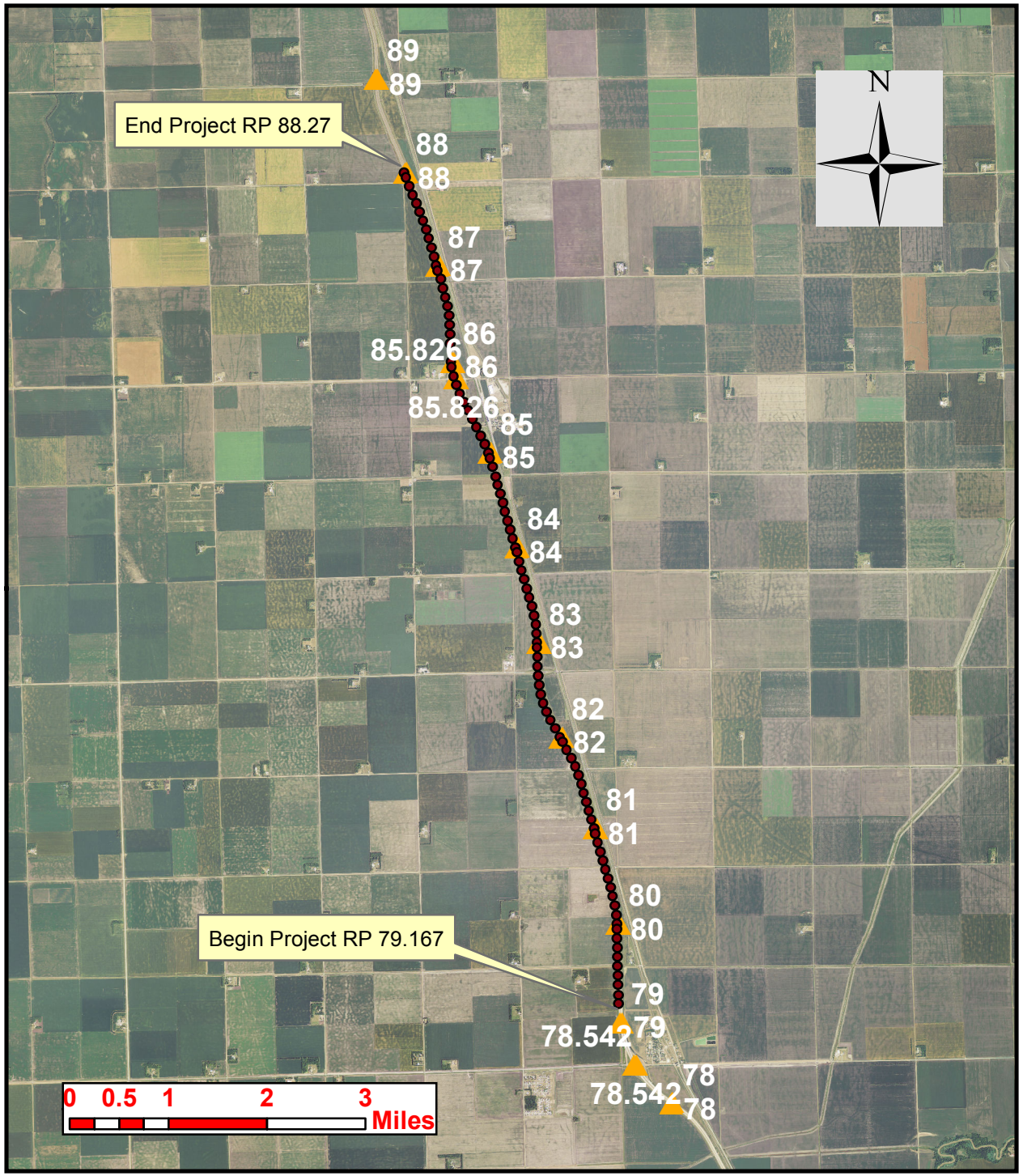

Linear Soils Survey and Recommendations

Project: IM-8-029(133)078
PCN: 18985
Scope: PCC Reconstruction
Length: 9.103 Miles
Location: Argusvill N to Hunter Separation SB

Table of Contents

Existing Roadway Section 1
Construction History 1
Existing Roadway Condition 2
Distress Data 2
Ride Data 3
Maintenance Review 3
Summary of Soil Analysis 4
Soil Sample Distribution 4
Moisture 5
Atterberg Limits 5
Swell Potential 5
Frost Susceptibility 6
Group Index 6
Design Recommendations 7
Design Information 7
Plan Notes 7

List of Figures

Figure 1 - Existing Typical Section 2
Figure 2 - Soil Sample Distribution 4
Figure 3 - Frost Susceptibility Distribution 6

List of Tables

Table 1 - Construction History (Segment 1 RP 79.153 to RP 85.71) 1
Table 2 - Construction History (RP 85.71 to 88.00) 1
Table 3 - Distress Data 2
Table 4 - Ride Data 3
Table 7 – Identified Maintenance Areas 3
Table 5 - Boring Locations Summary 4
Table 6 - Summary of In-Place and Optimum Moisture Contents 5
Table 7 - Summary of In-Place versus Optimum Moisture Content 5
Table 8 - Summary of Atterberg Limits 5
Table 9 - Swell Potential 5
Table 10 - Group Indices 6
Table 11 – Subgrade Reinforcement Recommendations 7
Table 12 - Subcut Recommendations 7

Appendices

Appendix A – Soil Classification and Frost Susceptibility
Appendix B – Pavement Evaluation Log
Appendix C – Boring Locations
Appendix D – Summary of Soils Analysis
Appendix E – Lab Results

Introduction

Location: Argusville N to Hunter Separation SB
Reference Points: 79.167 to 88.270
Project Length: 9.103 Miles
Proposed Project Scope: PCC Reconstruction
Investigation Scope: Drilled every 500' for length of project

Existing Roadway Section

Construction History

Table 1 - Construction History (Segment 1 RP 79.153 to RP 85.71)

Construction History				
Year	**Construction**	**Depth (in)**	**Width (ft)**	**Oil**
1968	Grade	---	48.0	---
1968	Lime Treated Subgrade	6.0	48.0	---
1968	C-C 104 Feet	---	---	---
1970	Plant Mix Base	2.0	48.0	SC-3000
1970	Cont – Reinf PCC	8.0	24.0	---
1970	Plan Mix Base	5.8	11.2, 0, 4.9	SC-3000
1970	Hot Bit Pavement	2.0	10.0, 0, 3.0	---
1982	Contract Sand Seal	---	10.0, 0, 3.0	AE-150S
1986	Contract Pavement Repair	---	---	---
1997	Int Mtce Patch – 1.5"	---	37	120-150
1998	Concrete Pavement Repair	---	24	---
1998	HBP – Variable Depth	4.0	24	PG 58-28
1998	HBP – Variable Depth	3.0	10, 0, 0	PG 58-28
1998	HBP – Variable Depth	3.0	0, 0, 3.0	PG 58-28
2008	Microsurfacing	---	24.5	---

Table 2 - Construction History (RP 85.71 to 88.00)

Construction History				
Year	**Construction**	**Depth (in)**	**Width (ft)**	**Oil**
1969	Grade	---	48	---
1969	C-C 104 Feet	---	---	---
1970	Lime Treated Subgrade	6.0	48	---
1971	Plant Mix Bit Base	2.0	28	SC-3000
1971	Cont – Reinf PCC	8.0	24	---
1971	Plant Mix Bit Base	6.5	11.6, 0, 4.6	SC-3000
1971	Hot Bit Pavement	2.0	10.0, 0, 3.0	85-100
1982	Contract Sand Seal	---	10.0, 0, 3.0	AE-150S
1986	Concrete Pavement Repair	---	---	---
1996	Int Mtce Patch – 1.5"	---	37	120-150
1998	Concrete Pavement Repair	---	24	---
1998	HBP – Variable Depth	4.0	24	PG 58-28
1998	HBP – Variable Depth	3.0	10.0, 0, 0	PG 58-28
1998	HBP – Variable Depth	3.0	0, 0, 3.0	PG 58-28
2008	Microsurfacing	---	24.5	---

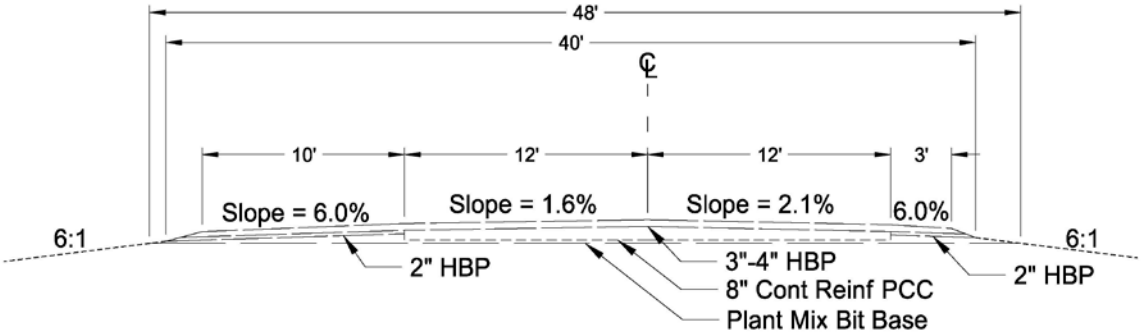

Figure 1 - Existing Typical Section

Existing Roadway Condition

Distress Data

Table 3 - Distress Data

Reference Point	Alligator Cracking	Longitudinal Cracking	Transverse Cracking	Block Cracking	Bituminous Patching	Rutting
	(0-18)	(0-9)	(0-9)	(0-9)	(0-18)	(0-12)
79	NA	0	1	0	0	6
80	0	1	1	0	0	6
81	0	1	1	0	0	6
82	0	1	1	0	0	6
83	0	1	1	0	0	6
84	0	1	1	0	0	6
85	0	4	1	0	0	6
86	0	1	1	0	0	6
87	0	1	4	0	0	6
88	0	0	7	0	0	6
Average	**0**	**1.1**	**1.9**	**0**	**0**	**6**

Ride Data

Table 4 - Ride Data

Reference Point	Distress Score		Rut (inches)		International Roughness Index (inches/mile)	
	Excellent	**≥ 98**	**Excellent**	**< 0.25**	**Excellent**	**< 61**
	Good	**88 - 97**	**Good**	**0.25 - 0.375**	**Good**	**61 - 99**
	Fair	**77 - 87**	**Fair**	**0.376 - 0.50**	**Fair**	**100 - 145**
	Poor	**≤ 76**	**Poor**	**> 0.50**	**Poor**	**>145**
79	97		NA		70	
80	91		0.20		72	
81	91		0.16		62	
82	91		0.16		68	
83	91		0.16		62	
84	91		0.17		67	
85	88		0.14		72	
86	91		0.15		71	
87	88		0.14		75	
88	86		0.17		79	
Average	**91**		**0.16**		**70**	

Maintenance Review

Date of Maintenance Review: 6/25/2012
Materials and Research Person Conducting the Review: Jamie Naumann
District Maintenance Person Conducting Review: Willie Walski

The evaluation log can be found in Appendix B.

Table 5 – Identified Maintenance Areas

Location RP + Feet	Distress Identified	Drilling Required (Yes or No)
79+807 - 88+1426	20’ Spaced Transverse Cracking	No

Field Investigation

A summary of the locations that were drilled is shown in following table.

Table 6 - Boring Locations Summary

Location RP + Feet	Boring Interval, Depth and Method	Reason for Boring
RP 79+881.76 ft – RP 88+1425.6 ft	Boring on the shoulder of the road every 500 Ft, 5 Ft and 6" Solid Flight Auger	Obtain subgrade information throughout the project area

Summary of Soil Analysis

Soil Sample Distribution

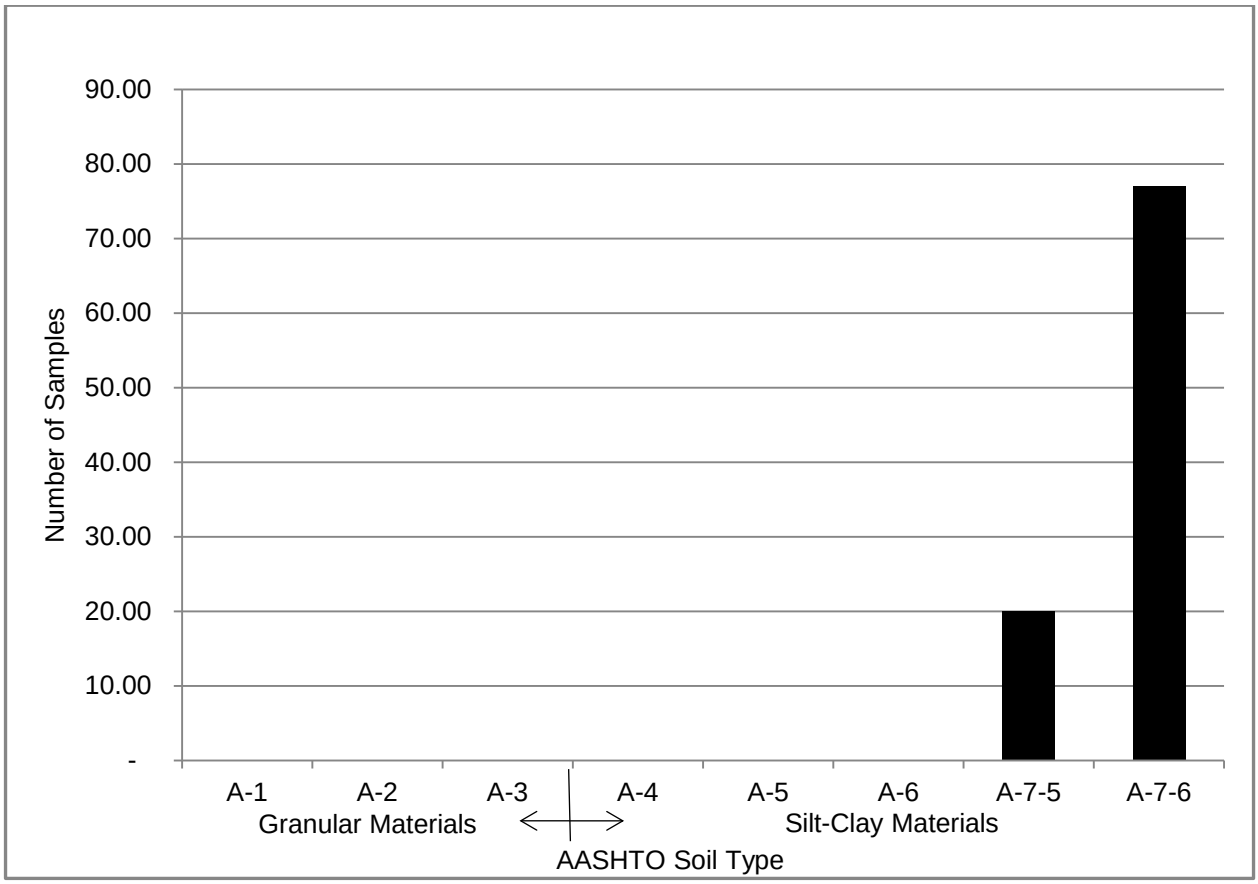

Figure 2 - Soil Sample Distribution

Moisture

The moisture contents provided in this report and summarized below have been obtained from samples taken on 6/25/12 and 6/27/12.

Table 7 - Summary of In-Place and Optimum Moisture Contents

Quantity	AASHTO Classification	In-Place Moisture Range (%)	In-Place Moisture Average (%)	T-99 Optimum Moisture Average (%)	Difference Between Average In-Place and T-99 Optimum Moistures (%)
20	A-7-5	29.4-36.4	33.2	26.8	6.4
77	A-7-6	27-40.6	32.4	26.2	6.2

Table 8 - Summary of In-Place versus Optimum Moisture Content

In-Place Moisture vs. Optimum Moisture						
Quantity	**AASHTO Classification**	**Below Optimum**	**Optimum to Moderate** (0 to 6% over optimum)	**Moderate to High** (6 to 10% over optimum)	**High** (10 to 16% over optimum)	**Very High** (> 16% over optimum)
20	A-7-5	0%	50%	50%	0%	0%
77	A-7-6	0%	39%	58%	3%	0%

Atterberg Limits

Table 9 - Summary of Atterberg Limits

AASHTO Classification	Liquid Limit Range (%)	Liquid Limit Average (%)	Plastic Limit Range (%)	Plastic Limit Average (%)	Plasticity Index Range (%)	Plasticity Index Average (%)
A-7-5	68-94	75	29-52	32	28-58	44
A-7-6	49-86	73	23-30	28	26-59	46

Swell Potential

The swell potential, which is based on the Plasticity Index (PI), is shown in the following table.

Table 10 - Swell Potential

Low (Plasticity Index < 25)	**Marginal** (25 ≤ Plasticity Index ≤ 35)	**High** (Plasticity Index > 35)
0%	3%	97%

Frost Susceptibility

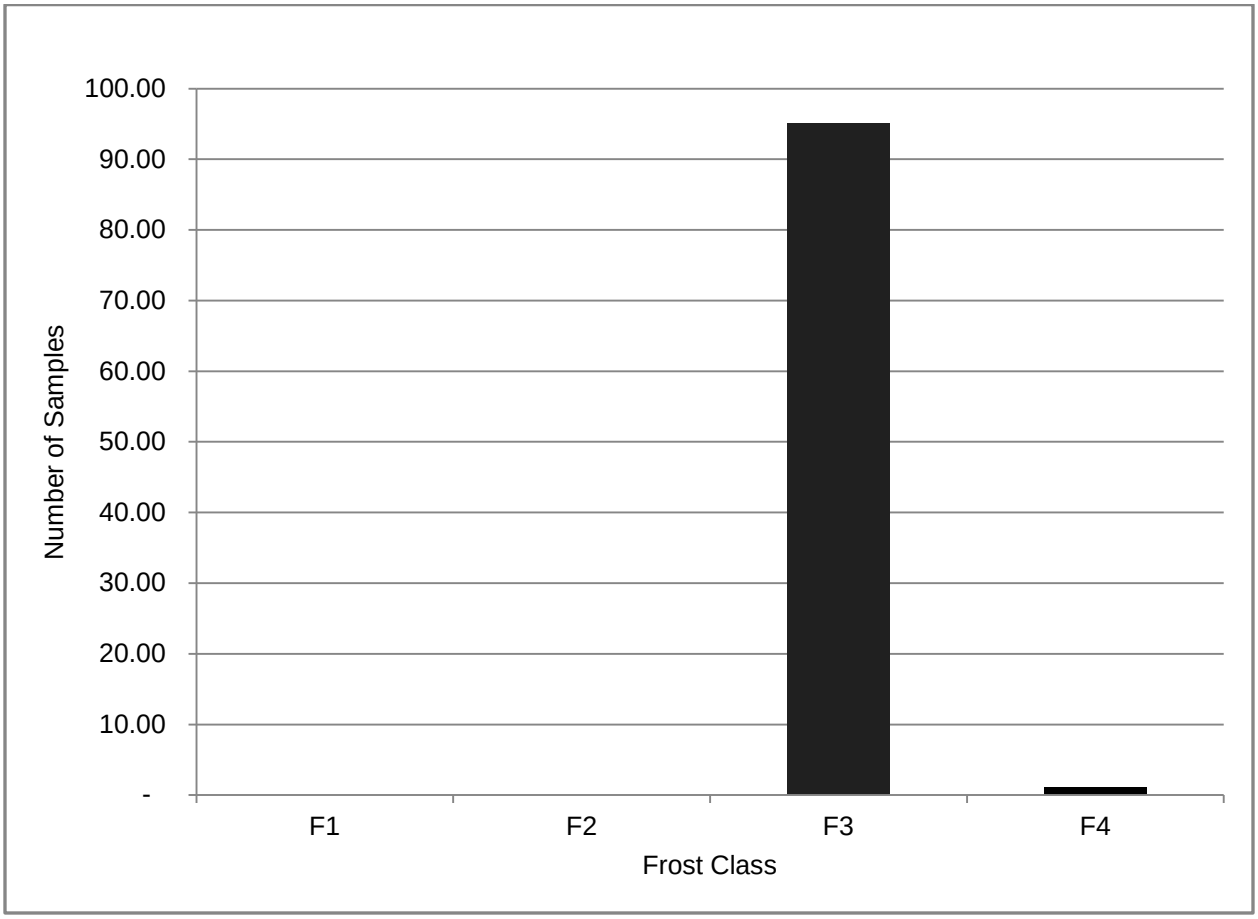

Figure 3 - Frost Susceptibility Distribution

Group Index

The Group Index is a parameter used to evaluate the quality of a soil as a subgrade material. The group index is always zero for A-1, A-2 and A-3 soils (Granular Soils). A group index of 20 or greater indicates a “very poor” subgrade material. The group indices are summarized in the following table.

Table 11 - Group Indices

AASHTO Classification	Group Index Range	Group Index Average
A-7-5	39-70	50
A-7-6	27-65	51

Existing Surface and Base Section at the Boring Locations

The borings were conducted on the shoulder of the roadway because they are asphalt shoulders and this allowed the drill crew to drill under traffic and did not require us to core through the Continuously Reinforced Concrete Pavement that is under the driving lanes. Therefore, the pavement and base thicknesses for the existing roadway were not measured. The existing pavement section can be found in the existing typical sections and/or construction history.

Design Recommendations

The analysis of the soils shows that the moisture contents were, on average 6.2% above the T-99 optimum moisture contents. The majority of the samples have high swell potential. These high well potentials are common in the Red River Valley. The Geotechnical Section recommends that 500 feet of 18 inch subcut be provided for use at the discretion of the project engineer.

We recommend placing geotextile reinforcement fabric R1 directly on the proposed subgrade across the entire pavement section for the total length of the project in lieu of subgrade prep. This will reduce the amount of disturbance to the subgrade, which will allow the soil to remain at its natural moisture content and thus limit any future movement.

Design Information

Compaction Method: T-99

Subgrade Prep: None

Subgrade Reinforcement: Geotextile Fabric R1

Table 12 – Subgrade Reinforcement Recommendations

Location	Reinforcement Type	Width
RP 79.167 – RP 88.270	Geotextile Fabric Type R1	Min 19’ Lt of Roadway CL Min 25’ Rt of Roadway CL

Subcut: 500 feet of 18 inch depth

Table 13 - Subcut Recommendations

Location	Depth
Engineers Discretion	18 inches

Drainage: none

Plan Notes

None

The recommendations in this report are based on the scope specified in the Introduction. If the scope of work, vertical profile or horizontal alignment is changed, in either the conceptual phase or the design phase, the Geotechnical Engineer must be notified as soon as possible to ensure that there is adequate geotechnical information addressing these areas.

APPENDIX A

SOIL CLASSIFICATION AND FROST SUSCEPTIBILITY

AASHTO Soil Classification System

Table 5.1. AASHTO Classification System

General Classification	*Granular materials (35% or less passing No. 200 Sieve (0.075 mm)*							*Silt-clay Materials More than 35% passing No. 200 Sieve (0.075 mm)*			
Group Classification	*A—1*		*A—3*	*A—2*				*A—4*	*A—5*	*A—6*	*A—7*
	A—1—a	*A—1—b*		*A—2—4*	*A—2—5*	*A—2—6*	*A—2—7*				*A—7—5* *A—7—6*
(*a*) Sieve Analysis: Percent Passing											
(*i*) 2.00 mm (No. 10)	50 max										
(*ii*) 0.425 mm (No. 40)	30 max	50 max	51 min								
(*iii*) 0.075 mm (No. 200)	15 max	25 max	10 max	35 max	35 max	35 max	35 max	36 min	36 min	36 min	36 min
(*b*) Characteristics of fraction passing 0.425 mm (No. 40)											
(*i*) Liquid limit				40 max	41 min	40 max	41 min	40 max	41 min	40 max	41 min
(*ii*) Plasticity index	6 max		N.P.	10 max	10 max	11 min	11 min	10 max	10 max	11 min	11 min*
(*c*) Usual types of significant Constituent materials	Stone Fragments Gravel and sand		Fine Sand	Silty or Clayey Gravel Sand				Silty Soils		Clayey Soils	
(*d*) General rating as subgrade.	Excellent to Good							Fair to Poor			

* If plasticity index is equal to or less than (liquid Limit—30), the soil is A—7—5 (*i.e.* PL > 30%)
If plasticity index is greater than (Liquid Limit—30), the soil is A—7—6 (*i.e.* PL < 30%)

Frost Susceptibility Index (Bases on US Army Corps of Engineers)

Frost Class	Frost Susceptibility	Soil Type	Percent Finer than 0.02 mm by weight %
F1	Negligible to Low	• Gravely Soils	3 – 10
F2	Low to Medium	• Gravely Soils • Sands	10 – 20 3 – 15
F3	High	• Gravelly Soils • Sands, except very fine silty sands • Clays, PI > 12	Greater than 20 Greater than 15 ----
F4	Very High	• All Silts • Very Fine Silty Sands • Clays, PI > 12 • Varved Clays and other fine-grained banded sediments	--- Greater than 15 --- ---

APPENDIX B

PAVEMENT EVALUATION

Pavement Evaluation Sheet – Asphalt Surface

Project Number: IM 8-029(133) 078 Date: 6-25-12

Section Contact: Willie Walski Initials: JW

Location RP + Feet to RP + Feet	Distress Type (Low Severity)	Distress Type (Medium Severity)	Distress Type (High Severity)
88+0000 to 79+1000	TC-D		

Distress Legend		

Cracking:
Alligator Cracking (**AC**)
Block Cracking (**BC**)
 	
Longitudinal Cracking:
• Wheel Path (**LC-WP**)
• Non-Wheel Path (**LC-NWP**)
 	
Transverse Cracking:
• Depressed (**TC-D**)
• Tenting (**TC-T**)
 	
Approx. Crack Spacing: 20'
 	
Last Date of Crack Seal: 2012
	Surface Deformation:
	Bituminous Patching:
	• Blade Patch (**BP-MBP**)
	• Hand Patch (**BP-MHP**)
	• Scotch Patch (**BP-MSP**)
	• Paver-Laid Patch (**BP-PLP**)
	Rutting (**RT**)
	Approx. Depth:_____
	Shoving (**SV**)
	
	Miscellaneous Defects:
	Water Pumping (**WP**)
	Area of Greatest Distress (**AGD**)
	• Location
	• Possible Cause(s) of Distress(es)
		Miscellaneous Defects:
		Frost Heave (**FH**)
		• Seasonal
		• Centerline Pipe
		• Previously Repaired
		• Signed
		• Evidence of Spring
		Slough Area
		• Water Present
		• Spring
		• Cattails
		• Location of Slough Area
		  • Right (**SA-R**)
		  • Left (**SA-L**)

General Comments

What is the area of greatest distress on the project? TC-D

What is the location? Throughout

What are the causes contributing to the distress? Traffic

Is there a frost heave on the project? no

Is it seasonal?

Is there a centerline pipe? no

Has it been previously repaired?

Is it signed?

Is there evidence of a spring? no

I spoke with Willie Walski on 6-25-12 and he indicated there were no issues that needed to be investigated on I 29 RP 884+0000 to 794+0000.

APPENDIX C

BORING LOCATIONS

Legend

- Boring Locations
- Reference Points

Legend

- Boring Locations
- Reference Points

Legend

- Boring Locations
- Reference Points

Legend

- Boring Locations
- Reference Points

Legend

- Boring Locations
- Reference Points

Legend

- Boring Locations
- Reference Points

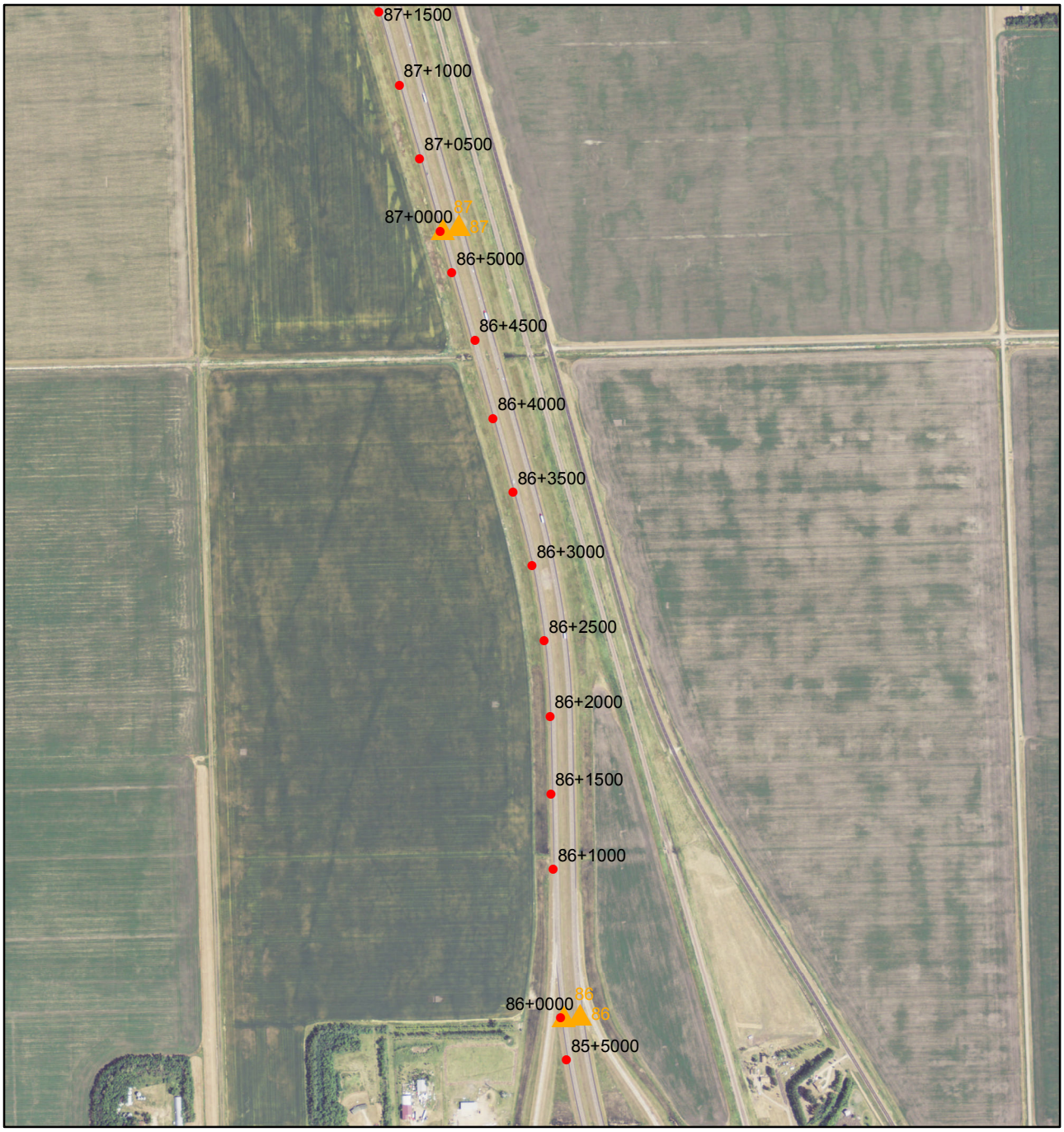

Legend

- Boring Locations
- Reference Points

Legend

- Boring Locations
- Reference Points

APPENDIX D

SUMMARY OF SOILS ANALYSIS

Project No.: IM-8-029(133)078

PCN: 18965

Color Key

Swell Potential:	Low	Marginal	High	Moisture Content:	Below PL	0-5% Over PL	>5% Over PL
Group Index:	GI≤20	GI>20		Ave. In-Place: Moisture Content	MC < Opt.	0 ≤ MC < 6% Over opt.	6 ≤ MC < 10% Over opt.	10 ≤ MC < 16% Over opt.	MC >16% Over opt.

Lab No.	STA	Offset	Depth of Sample (ft)	Plastic Limit (PL)	AASHTO Class	Group Index	Optimum Moisture	Swell Potential (PI)	Ave. In-Place Moisture	Moisture Content @ Depth (ft) 2	3	4	5	6	7	8	9	10	11	12	13	14	15	16	17	18	19	20	21	22	23	24	25	Frost Class
715	79+1000	Rt 22 SB	0.7-5	28.3	A-7-6(53)	53	27.1	51	33.9	33.8	30.1	36.1	35.5																					F3
714	79+1500	Rt 22 SB	0.8-5	30.0	A-7-5(44)	44	28.1	40	33.6	31.2	32.9	32.5	37.8																					F3
713	79+2000	Rt 22 SB	0.9-5	28.2	A-7-6(49)	49	27.3	44	33.2	31.1	34.0	33.1	34.8																					F3
712	79+2500	Rt 22 SB	0.7-9	27.4	A-7-6(52)	52	27.5	47	33.6	33.7	32.6	33.6	34.5																					F3
711	79+3000	Rt 22 SB	0.9-5	28.1	A-7-6(51)	51	26.6	46	30.8	29.1	29.2	33.3	31.5																					F3
710	79+3500	Rt 22 SB	0.8-5	29.9	A-7-5(56)	56	25.8	48	31.1	28.4	30.8	33.6	31.4																					F3
709	79+4000	Rt 22 SB	0.7-5	27.3	A-7-6(55)	55	26.9	48	28.6	31.3	24.8	29.1	29.3																					F3
708	79+4500	Rt 22 SB	0.7-5	27.7	A-7-6(50)	50	25.6	45	30.8	32.7	28.0	32.2	30.1																					F3
707	79+5000	Rt 22 SB	0.7-5	29.5	A-7-6(52)	52	27.0	45	31.6	32.7	27.3	34.7	31.9																					F3
706	80+0000	Rt 22 SB	0.7-5	28.1	A-7-6(49)	49	27.2	44	30.7	32.2	29.0	28.5	33.0																					F3
705	80+0500	Rt 22 SB	0.7-5	25.0	A-7-6(47)	47	24.7	45	32.9	32.5	31.1	33.5	34.6																					F3
704	80+1000	Rt 22 SB	0.7-5	27.6	A-7-6(53)	53	28.1	47	32.1	31.8	31.4	33.2	31.8																					F3
703	80+1500	Rt 22 SB	0.7-5	29.2	A-7-5(46)	46	26.6	43	32.8	32.0	32.5	35.0	31.8																					F3

Project No.: IM-8-029(133)078

PCN: 18965

Color Key

Swell Potential:	Low	Marginal	High	Moisture Content:	Below PL	0-5% Over PL	>5% Over PL
Group Index:	GI≤20	GI>20		Ave. In-Place: Moisture Content	MC < Opt.	0 ≤ MC < 6% Over opt.	6 ≤ MC < 10% Over opt.	10 ≤ MC < 16% Over opt.	MC >16% Over opt.

Lab No.	STA	Offset	Depth of Sample (ft)	Plastic Limit (PL)	AASHTO Class	Group Index	Optimum Moisture	Swell Potential (PI)	Ave. In-Place Moisture	Moisture Content @ Depth (ft) 2	3	4	5	6	7	8	9	10	11	12	13	14	15	16	17	18	19	20	21	22	23	24	25	Frost Class
702	80+2000	Rt 22 SB	0.8-5	28.5	A-7-6(47)	47	24.4	43	30.4	30.5	29.6	30.8	30.9																					F3
701	80+2500	Rt 22 SB	0.8-5	28.5	A-7-6(50)	50	25.4	45	31.7	31.6	30.6	31.7	33.0																					F3
700	80+3000	Rt 22 SB	0.8-5	26.3	A-7-6(58)	58	24.5	52	31.4	30.4	32.6	32.8	29.8																					F3
699	80+3500	Rt 22 SB	0.9-5	28.5	A-7-6(52)	52	24.5	46	32.0	31.6	30.4	32.2	33.8																					F3
698	80+4000	Rt 22 SB	0.6-5	28.5	A-7-6(50)	50	27.6	44	30.6	30.1	29.9	29.5	32.9																					F3
697	80+4500	Rt 22 SB	0.7-5	26.8	A-7-6(57)	57	25.7	50	32.2	31.1	31.7	30.4	35.4																					F3
696	80+5000	Rt 22 SB	0.8-5	26.8	A-7-6(55)	55	26.9	51	35.0	35.9	31.8	38.6	33.5																					F3
695	81+0000	Rt 22 SB	0.6-5	26.5	A-7-6(57)	57	27.2	50	33.4	31.4	30.9	35.9	35.6																					F3
694	81+0500	Rt 22 SB	0.9-5	27.1	A-7-6(55)	55	27.1	49	33.1	33.3	33.1	34.4	31.7																					F3
693	81+1000	Rt 22 SB	0.7-5	25.1	A-7-6(64)	64	27.2	58	28.6	13.2	34.5	31.2	35.3																					F3
692	81+1500	Rt 22 SB	0.6-5	27.9	A-7-6(53)	53	26.9	48	31.8	31.4	32.9	32.1	30.8																					F3
691	81+2000	Rt 22 SB	0.6-5	28.6	A-7-6(49)	49	28.1	44	31.5	28.9	31.1	32.9	33.1																					F3
690	81+2500	Rt 22 SB	0.7-5	28.8	A-7-6(58)	58	25.7	51	40.6	44.6	32.9	42.4	42.5																					F3

Project No.: IM-8-029(133)078

PCN: 18965

Color Key

Swell Potential:	Low	Marginal	High	Moisture Content:	Below PL / 0-5% Over PL / >5% Over PL
Group Index:	GI≤20	GI>20		Ave. In-Place Moisture Content	MC < Opt. / 0 ≤ MC < 6% Over opt. / 6 ≤ MC < 10% Over opt. / 10 ≤ MC < 16% Over opt. / MC >16% Over opt.

Lab No.	STA	Offset	Depth of Sample (ft)	Plastic Limit (PL)	AASHTO Class	Group Index	Optimum Moisture	Swell Potential (PI)	Ave. In-Place Moisture	Moisture Content @ Depth (ft) 2	3	4	5	6	7	8	9	10	11	12	13	14	15	16	17	18	19	20	21	22	23	24	25	Frost Class
689	81+3000	Rt 22 SB	0.7-5	26.0	A-7-6(53)	53	25.1	49	31.2	29.8	35.5	28.6	31.0																					F3
688	81+3500	Rt 22 SB	0.7-5	26.1	A-7-6(53)	53	26.3	47	31.8	29.7	31.1	34.0	32.6																					F3
687	81+4000	Rt 22 SB	0.7-5	28.6	A-7-6(54)	54	25.6	48	31.9	30.1	31.1	34.9	31.5																					F3
686	81+4500	Rt 22 SB	0.7-5	28.0	A-7-6(55)	55	27.1	49	32.2	33.5	33.3	33.3	28.9																					F3
685	81+5000	Rt 22 SB	0.6-5	25.5	A-7-6(54)	54	25.4	50	31.9	32.9	29.4	31.4	34.0																					F3
684	82+0000	Rt 22 SB	0.7-5	30.8	A-7-5(49)	49	27.1	42	30.9	33.3	29.9	30.2	30.4																					F3
683	82+0500	Rt 22 SB	0.5-5	29.3	A-7-6(54)	54	27.1	48	34.6	33.2	35.7	34.9	34.6																					F3
682	82+1000	Rt 22 SB	0.9-5	28.2	A-7-6(53)	53	26.4	49	33.3	31.8	36.3	33.3	32.0																					F3
681	82+1500	Rt 22 SB	0.9-5	26.1	A-7-6(56)	56	26.5	51	33.4	36.5	32.3	32.8	31.8																					F3
680	82+2000	Rt 22 SB	0.9-5	27.4	A-7-6(54)	54	26.5	50	34.4	35.4	32.1	35.0	34.9																					F3
679	82+2500	Rt 22 SB	1-5	26.4	A-7-6(53)	53	27.0	48	36.5	44.3	30.8	31.6	39.2																					F3
678	82+3000	Rt 22 SB	0.9-5	27.7	A-7-6(57)	57	25.7	52	35.0	39.8	30.6	34.4	35.0																					F3
677	82+3500	Rt 22 SB	0.9-5	33.5	A-7-5(54)	54	28.7	48	36.4	34.8	31.4	44.1	35.3																					F3

Project No.: IM-8-029(133)078

PCN: 18965

Color Key

Swell Potential:	Low	Marginal	High	Moisture Content:	Below PL	0-5% Over PL	>5% Over PL	
Group Index:	GI≤20	GI>20		Ave. In-Place: Moisture Content	MC < Opt.	0 ≤ MC < 6% Over opt.	6 ≤ MC < 10% Over opt.	10 ≤ MC < 16% Over opt.	MC >16% Over opt.

Lab No.	STA	Offset	Depth of Sample (ft)	Plastic Limit (PL)	AASHTO Class	Group Index	Optimum Moisture	Swell Potential (PI)	Ave. In-Place Moisture	Moisture Content @ Depth (ft) 2	3	4	5	6	7	8	9	10	11	12	13	14	15	16	17	18	19	20	21	22	23	24	25	Frost Class
676	82+4000	Rt 22 SB	0.7-5	30.6	A-7-5(59)	59	27.4	52	35.1	35.6	33.3	32.0	39.5																					F3
675	82+4500	Rt 22 SB	0.7-5	27.5	A-7-6(60)	60	26.3	54	36.2	43.6	31.6	34.8	34.7																					F3
674	82+5000	Rt 22 SB	0.6-5	27.1	A-7-6(51)	51	25.9	46	30.6	30.6	31.3	30.7	29.6																					F3
673	83+0000	Rt 22 SB	0.7-5	27.3	A-7-6(51)	51	26.4	46	32.6	32.6	28.9	32.6	36.2																					F3
672	83+0500	Rt 22 SB	0.6-5	26.6	A-7-6(65)	65	26.3	59	35.1	31.6	41.6	35.2	31.9																					F3
671	83+1000	Rt 22 SB	0.8-5	25.2	A-7-6(53)	53	25.6	50	34.2	33.9	33.5	33.6	35.7																					F3
670	83+1500	Rt 22 SB	0.7-5	26.6	A-7-6(55)	55	24.1	49	31.8	31.5	28.5	33.3	34.0																					F3
669	83+2000	Rt 22 SB	0.6-5	29.6	A-7-5(42)	42	23.6	38	33.2	33.7	34.3	32.4	32.2																					F3
668	83+2500	Rt 22 SB	0.6-5	28.4	A-7-6(57)	57	25.9	53	30.4	33.8	31.2	23.6	32.8																					F3
667	83+3000	Rt 22 SB	0.7-5	23.9	A-7-6(44)	44	24.2	43	30.2	31.7	30.2	30.2	28.6																					F3
666	83+3780	Rt 22 SB	0.7-5	27.1	A-7-6(45)	45	25.3	43	32.8	32.0	31.8	35.2	32.3																					F3
665	83+4280	Rt 22 SB	0.8-5	29.0	A-7-6(50)	50	25.8	45	32.4	35.5	29.8	33.0	31.4																					F3
664	83+4780	Rt 22 SB	0.7-5	28.1	A-7-6(55)	55	27.1	50	31.2	30.2	30.1	32.2	32.3																					F3

Project No.: IM-8-029(133)078

PCN: 18965

Color Key

Swell Potential:	Low	Marginal	High	Moisture Content:	Below PL	0-5% Over PL	>5% Over PL
Group Index:	GI≤20	GI>20		Ave. In-Place: Moisture Content	MC < Opt.	0 ≤ MC < 6% Over opt.	6 ≤ MC < 10% Over opt.
					10 ≤ MC < 16% Over opt.	MC >16% Over opt.	

Lab No.	STA	Offset	Depth of Sample (ft)	Plastic Limit (PL)	AASHTO Class	Group Index	Optimum Moisture	Swell Potential (PI)	Ave. In-Place Moisture	Moisture Content @ Depth (ft) 2	3	4	5	6	7	8	9	10	11	12	13	14	15	16	17	18	19	20	21	22	23	24	25	Frost Class
663	83+5000	Rt 22 SB	0.7-5	28.6	A-7-6(55)	55	26.0	48	33.4	32.3	32.4	33.5	35.6																					F3
662	84+0000	Rt 22 SB	0.7-5	27.2	A-7-6(42)	42	24.7	40	30.4	30.0	27.3	33.3	30.8																					F3
661	84+0500	Rt 22 SB	0.7-5	28.0	A-7-6(48)	48	26.9	44	30.1	28.5	26.5	33.0	32.5																					F3
660	84+1000	Rt 22 SB	0.7-5	26.8	A-7-6(40)	40	25.3	38	33.0	30.6	36.8	32.1	32.6																					F3
659	84+1500	Rt 22 SB	0.7-5	26.4	A-7-6(49)	49	28.0	45	32.1	31.6	31.0	32.7	33.1																					F3
658	84+2000	Rt 22 SB	0.7-5	23.9	A-7-6(42)	42	25.8	43	34.7	33.8	35.5	36.8	32.6																					F3
657	84+2500	Rt 22 SB	0.8-5	23.2	A-7-6(27)	27	24.5	26	33.0	34.8	32.7	33.6	31.1																					F3
656	84+3000	Rt 22 SB	0.6-5	29.4	A-7-6(45)	45	26.8	40	33.7	33.1	31.1	37.5	33.2																					F3
655	84+3500	Rt 22 SB	0.7-5	28.3	A-7-6(51)	51	27.1	46	31.3	31.7	30.0	33.0	30.4																					F3
654	84+4000	Rt 22 SB	0.8-5	27.5	A-7-6(53)	53	25.7	47	31.6	31.1	32.3	32.0	31.2																					F3
653	84+4500	Rt 22 SB	1.2-5	31.2	A-7-5(45)	45	25.0	41	33.9	40.3	29.4	33.1	32.8																					F3
652	84+5000	Rt 22 SB	0.7-5	28.5	A-7-6(42)	42	28.0	38	28.8	30.0	29.0	26.0	30.4																					F3
651	85+0000	Rt 22 SB	0.7-5	28.7	A-7-6(59)	59	28.8	54	33.8	31.3	33.9	33.3	36.6																					F3

Project No.: IM-8-029(133)078

PCN: 18965

Color Key

Swell Potential:	Low	Marginal	High	Moisture Content:	Below PL	0-5% Over PL	>5% Over PL	
Group Index:	GI≤20	GI>20		Ave. In-Place: Moisture Content	MC < Opt.	0 ≤ MC < 6% Over opt.	6 ≤ MC < 10% Over opt.	10 ≤ MC < 16% Over opt.	MC >16% Over opt.

Lab No.	STA	Offset	Depth of Sample (ft)	Plastic Limit (PL)	AASHTO Class	Group Index	Optimum Moisture	Swell Potential (PI)	Ave. In-Place Moisture	Moisture Content @ Depth (ft) 2	3	4	5	6	7	8	9	10	11	12	13	14	15	16	17	18	19	20	21	22	23	24	25	Frost Class
650	85+0500	Rt 22 SB	0.7-5	25.7	A-7-6(52)	52	28.2	48	33.0	32.1	34.6	31.5	33.7																					F3
649	85+1000	Rt 22 SB	0.6-5	29.3	A-7-6(52)	52	26.9	45	32.1	32.0	32.9	31.1	32.4																					F3
648	85+1500	Rt 22 SB	0.8-5	27.2	A-7-6(47)	47	25.9	46	32.4	30.4	31.1	33.8	34.3																					F3
647	85+2000	Rt 22 SB	0.9-5	30.3	A-7-5(50)	50	25.4	44	30.5	31.6	29.5	30.6	30.4																					F3
646	85+2500	Rt 22 SB	0.1-5	29.2	A-7-6(52)	52	27.3	47	33.2	35.1	30.8	33.0	33.9																					F3
645	85+3000	Rt 33 SB	0.6-5	27.6	A-7-6(54)	54	26.6	47	33.0	32.1	35.9	33.3	30.9																					F3
644	85+3500	Rt 33 SB	0.8-5	52.0	A-7-5(39)	39	26.7	28	35.1	35.6	32.7	37.3	34.8																					F4
643	85+4000	Rt 22 SB	1.2-5	30.2	A-7-5(47)	47	27.7	44	31.9	34.3	32.0	30.7	30.6																					F3
642	85+4500	Rt 22 SB	1-5	27.4	A-7-6(46)	46	25.0	41	32.3	40.0	27.3	31.5	30.5																					F3
641	85+5000	Rt 22 SB	1-5	29.7	A-7-5(45)	45	26.1	40	32.0	37.3	30.5	31.1	29.0																					F3
640	86+0000	Rt 22 SB	1-5	29.9	A-7-5(54)	54	27.7	48	36.4	49.7	32.7	31.8	31.4																					F3
639	86+1000	Rt 22 SB	0.4-5	28.5	A-7-6(49)	49	26.7	43	31.5	31.9	30.8	30.1	33.2																					F3
638	86+1500	Rt 22 SB	0.5-5	28.6	A-7-6(52)	52	27.9	45	31.5	30.3	32.2	31.7	31.8																					F3

Project No.: IM-8-029(133)078

PCN: 18965

Color Key

Swell Potential:	Low	Marginal	High	Moisture Content:	Below PL	0-5% Over PL	>5% Over PL	
Group Index:	GI≤20	GI>20		Ave. In-Place: Moisture Content	MC < Opt.	0 ≤ MC < 6% Over opt.	6 ≤ MC < 10% Over opt.	10 ≤ MC < 16% Over opt.	MC >16% Over opt.

Lab No.	STA	Offset	Depth of Sample (ft)	Plastic Limit (PL)	AASHTO Class	Group Index	Optimum Moisture	Swell Potential (PI)	Ave. In-Place Moisture	Moisture Content @ Depth (ft) 2	3	4	5	6	7	8	9	10	11	12	13	14	15	16	17	18	19	20	21	22	23	24	25	Frost Class
637	86+2000	Rt 22 SB	0.6-5	29.2	A-7-5(45)	45	26.0	40	31.4	30.3	29.5	31.9	34.0																					F3
636	86+2500	Rt 22 SB	0.9-5	29.2	A-7-6(50)	50	26.7	44	32.9	33.3	31.1	31.4	35.8																					F3
635	86+3000	Rt 22 SB	0.8-5	29.4	A-7-5(44)	44	26.7	38	31.8	32.8	31.2	34.2	28.8																					F3
634	86+3500	Rt 22 SB	0.8-5	28.7	A-7-6(45)	45	27.1	39	33.8	34.2	35.9	34.1	30.8																					F3
633	86+4000	Rt 22 SB	0.7-5	31.5	A-7-5(55)	55	27.4	48	35.3	30.5	30.5	33.0	47.3																					F3
632	86+4500	Rt 22 SB	0.6-5	35.3	A-7-5(70)	70	27.6	58	36.4	32.7	38.0	36.8	38.3																					F3
631	86+5000	Rt 22 SB	0.6-5	31.9	A-7-5(54)	54	27.8	46	29.4	28.6	30.0	29.7	29.1																					F3
630	87+0000	Rt 22 SB	0.8-5	30.6	A-7-5(53)	53	27.6	46	33.2	35.6	33.5	33.9	29.9																					F3
629	87+0500	Rt 22 SB	0.8-5	29.4	A-7-6(43)	43	25.9	38	32.0	32.2	35.2	32.2	28.5																					F3
628	87+1000	Rt 22 SB	0.7-5	29.6	A-7-5(43)	43	26.7	39	33.0	36.1	32.2	33.3	30.5																					F3
627	87+1500	Rt 22 SB	0.8-5	27.6	A-7-6(45)	45	23.8	40	31.6	32.6	32.4	31.1	30.3																					F3
626	87+2000	Rt 22 SB	0.6-5	25.4	A-7-6(52)	52	26.0	47	32.8	35.4	32.0	34.7	28.9																					F3
625	87+2500	Rt 22 SB	0.9-5	28.5	A-7-6(53)	53	25.9	47	30.3	35.0	29.0	32.2	25.0																					F3

Project No.: IM-8-029(133)078

PCN: 18965

Color Key

Swell Potential:	Low	Marginal	High	Moisture Content:	Below PL	0-5% Over PL	>5% Over PL
Group Index:	GI≤20	GI>20		Ave. In-Place: Moisture Content	MC < Opt.	0 ≤ MC < 6% Over opt.	6 ≤ MC < 10% Over opt.	10 ≤ MC < 16% Over opt.	MC >16% Over opt.

Lab No.	STA	Offset	Depth of Sample (ft)	Plastic Limit (PL)	AASHTO Class	Group Index	Optimum Moisture	Swell Potential (PI)	Ave. In-Place Moisture	Moisture Content @ Depth (ft) 2	3	4	5	6	7	8	9	10	11	12	13	14	15	16	17	18	19	20	21	22	23	24	25	Frost Class
624	87+3000	Rt 22 SB	0.8-5	27.3	A-7-6(49)	49	26.4	45	33.0	33.5	30.6	34.7	33.3																					F3
623	87+3500	Rt 22 SB	0.7-5	28.3	A-7-6(36)	36	25.0	37	31.8	32.0	29.5	33.0	32.9																					F3
622	87+4000	Rt 22 SB	0.7-5	27.7	A-7-6(37)	37	25.3	35	32.4	29.8	30.6	32.8	36.5																					F3
621	87+4500	Rt 22 SB	0.8-5	28.0	A-7-6(44)	44	24.2	42	33.2	35.8	35.5	28.4	33.1																					F3
620	87+5000	Rt 22 SB	0.7-5	28.8	A-7-6(41)	41	24.0	38	34.3	37.0	30.8	33.9	35.5																					F3
619	88+0000	Rt 22 SB	0.7-5	28.5	A-7-6(43)	43	26.6	38	27.0	29.8	34.0	31.5	12.7																					F3

APPENDIX E

LAB RESULTS

Linear Laboratory Analysis

Department of Transportation, Materials and Research Division
300 Airport Road, Bismarck ND 58504 (701) 328-6900

Report Number	SS-25-2012	**Date Reported**	7/9/2012	**District**	Fargo
County	CASS	**Submitted By**	Naumann	**Project Number**	IM-8-029(133)078
		AASHTO Test Method		**PCN**	18965

Comments

Lab Number	715	714	713	712
Reference Pt + Feet	79+1000	79+1500	79+2000	79+2500
Distance From CenterLine (Ft.)	Rt 22 SB	Rt 22 SB	Rt 22 SB	Rt 22 SB
Depth, Ft.	0.7 - 5.0	0.8 - 5.0	0.9 - 5.0	0.7 - 9.0
Field Sample No.	715	714	713	712
% Pass. 3/8" Sieve	100	100	100	100
% Pass. No. 4 Sieve	99	100	100	100
% Pass. No. 10 Sieve	98	99	99	100
% Coarse Sand (-No. 10 + No. 40)	3	2	1	1
% Fine Sand (-No. 40 + No. 200)	4	4	3	2
% Silt (0.074 - 0.005 mm)	21	26	26	25
% Clay (-0.005 mm)	70	66	69	71
Liquid Limit (-No. 40)	79	71	72	74
Plasticity Index (-No. 40)	51	41	44	47
Plastic Limit	28	30	28	27
Soil Color	BRN/GRY/BLK	BRN/GRY/BLK	BRN/GRY/BLK	BRN/GRY/BLK
Textural Class	CLY	CLY	CLY	CLY
Soil Class (AASHTO M-145)	A-7-6(53)	A-7-5(44)	A-7-6(49)	A-7-6(52)
Frost Class	F3	F3	F3	F3
Optimum Moisture (%)	27.1	28.1	27.3	27.5
Maximum Dry Density (pcf)	90.2	86.7	89.7	90.5
% Organic Content				
Depth (Ft.) | Moisture (%)	2 | 33.8	2 | 31.2	2 | 31.1	2 | 33.7
	3 | 30.1	3 | 32.9	3 | 34.0	3 | 32.6
	4 | 36.1	4 | 32.5	4 | 33.1	4 | 33.6
	5 | 35.5	5 | 37.8	5 | 34.8	5 | 34.5
Avg. Moisture of Sample Depth	33.9	33.6	33.2	33.6

Scott W. Wutzke, Testing Lab Supervisor
Date Printed: 1/15/2014

Linear Laboratory Analysis

Department of Transportation, Materials and Research Division
300 Airport Road, Bismarck ND 58504 (701) 328-6900

Report Number	SS-25-2012	**Date Reported**	7/9/2012	**District**	Fargo
County	CASS	**Submitted By**	Naumann	**Project Number**	IM-8-029(133)078
		AASHTO Test Method		**PCN**	18965

Comments

Lab Number	711	710	709	708
Reference Pt + Feet	79+3000	79+3500	79+4000	79+4500
Distance From CenterLine (Ft.)	Rt 22 SB	Rt 22 SB	Rt 22 SB	Rt 22 SB
Depth, Ft.	0.9 - 5.0	0.8 - 5.0	0.7 - 5.0	0.7 - 5.0
Field Sample No.	711	710	709	708
% Pass. 3/8" Sieve	100	100	100	100
% Pass. No. 4 Sieve	100	100	100	100
% Pass. No. 10 Sieve	100	100	100	100
% Coarse Sand (-No. 10 + No. 40)	1	1	1	1
% Fine Sand (-No. 40 + No. 200)	2	2	2	2
% Silt (0.074 - 0.005 mm)	23	26	28	29
% Clay (-0.005 mm)	73	71	69	67
Liquid Limit (-No. 40)	74	78	75	72
Plasticity Index (-No. 40)	46	48	48	45
Plastic Limit	28	30	27	28
Soil Color	BRN/GRY/BLK	BRN/GRY/BLK	BRN/GRY/BLK	BRN/GRY/BLK
Textural Class	CLY	CLY	CLY	CLY
Soil Class (AASHTO M-145)	A-7-6(51)	A-7-5(56)	A-7-6(55)	A-7-6(50)
Frost Class	F3	F3	F3	F3
Optimum Moisture (%)	26.6	25.8	26.9	25.6
Maximum Dry Density (pcf)	91.6	92.1	90.6	91.8
% Organic Content				
Depth (Ft.) | Moisture (%)	2 | 29.1	2 | 28.4	2 | 31.3	2 | 32.7
	3 | 29.2	3 | 30.8	3 | 24.8	3 | 28.0
	4 | 33.3	4 | 33.6	4 | 29.1	4 | 32.2
	5 | 31.5	5 | 31.4	5 | 29.3	5 | 30.1
Avg. Moisture of Sample Depth	30.7	31.0	28.6	30.7

Scott W. Wutzke, Testing Lab Supervisor
Date Printed: 1/15/2014

Linear Laboratory Analysis

Department of Transportation, Materials and Research Division
300 Airport Road, Bismarck ND 58504 (701) 328-6900

Report Number	SS-25-2012	**Date Reported**	7/9/2012	**District**	Fargo
County	CASS	**Submitted By**	Naumann	**Project Number**	IM-8-029(133)078
		AASHTO Test Method		**PCN**	18965

Comments

Lab Number	707	706	705	704
Reference Pt + Feet	79+5000	80+0000	80+0500	80+1000
Distance From CenterLine (Ft.)	Rt 22 SB	Rt 22 SB	Rt 22 SB	Rt 22 SB
Depth, Ft.	0.7 - 5.0	0.7 - 5.0	0.7 - 5.0	0.7 - 5.0
Field Sample No.	707	706	705	704
% Pass. 3/8" Sieve	100	100	100	100
% Pass. No. 4 Sieve	100	100	100	100
% Pass. No. 10 Sieve	100	100	98	100
% Coarse Sand (-No. 10 + No. 40)	1	1	3	1
% Fine Sand (-No. 40 + No. 200)	2	3	3	2
% Silt (0.074 - 0.005 mm)	23	27	27	24
% Clay (-0.005 mm)	74	69	66	73
Liquid Limit (-No. 40)	75	72	70	75
Plasticity Index (-No. 40)	45	44	45	47
Plastic Limit	30	28	25	28
Soil Color	BRN/GRY/BLK	BRN/GRY/BLK	BRN/GRY/BLK	BRN/GRY/BLK
Textural Class	CLY	CLY	CLY	CLY
Soil Class (AASHTO M-145)	A-7-6(52)	A-7-6(49)	A-7-6(47)	A-7-6(53)
Frost Class	F3	F3	F3	F3
Optimum Moisture (%)	27.0	27.2	24.7	28.1
Maximum Dry Density (pcf)	89.7	91.1	92.7	90.1
% Organic Content				
Depth (Ft.) | Moisture (%)	2 | 32.7	2 | 32.2	2 | 32.5	2 | 31.8
	3 | 27.3	3 | 29.0	3 | 31.1	3 | 31.4
	4 | 34.7	4 | 28.5	4 | 33.5	4 | 33.2
	5 | 31.9	5 | 33.0	5 | 34.6	5 | 31.8
Avg. Moisture of Sample Depth	31.7	30.7	32.9	32.0

Scott W. Wutzke, Testing Lab Supervisor
Date Printed: 1/15/2014

Linear Laboratory Analysis

Department of Transportation, Materials and Research Division
300 Airport Road, Bismarck ND 58504 (701) 328-6900

Report Number	SS-25-2012	**Date Reported**	7/9/2012	**District**	Fargo
County	CASS	**Submitted By**	Naumann	**Project Number**	IM-8-029(133)078
		AASHTO Test Method		**PCN**	18965

Comments

Lab Number	703	702	701	700
Reference Pt + Feet	80+1500	80+2000	80+2500	80+3000
Distance From CenterLine (Ft.)	Rt 22 SB	Rt 22 SB	Rt 22 SB	Rt 22 SB
Depth, Ft.	0.7 - 5.0	0.8 - 5.0	0.8 - 5.0	0.8 - 5.0
Field Sample No.	703	702	701	700
% Pass. 3/8" Sieve	99	99	100	100
% Pass. No. 4 Sieve	99	99	100	100
% Pass. No. 10 Sieve	98	98	99	100
% Coarse Sand (-No. 10 + No. 40)	3	1	1	1
% Fine Sand (-No. 40 + No. 200)	4	3	3	2
% Silt (0.074 - 0.005 mm)	29	28	21	25
% Clay (-0.005 mm)	62	66	75	71
Liquid Limit (-No. 40)	73	72	73	78
Plasticity Index (-No. 40)	43	43	45	52
Plastic Limit	29	29	29	26
Soil Color	BRN/GRY/BLK	BRN/BLK	BRN/BLK	BRN/BLK
Textural Class	CLY	CLY	CLY	CLY
Soil Class (AASHTO M-145)	A-7-5(46)	A-7-6(47)	A-7-6(50)	A-7-6(58)
Frost Class	F3	F3	F3	F3
Optimum Moisture (%)	26.6	24.4	25.4	24.5
Maximum Dry Density (pcf)	90.1	90.9	92.6	90.7
% Organic Content				
Depth (Ft.) | Moisture (%)	2 | 32.0	2 | 30.5	2 | 31.6	2 | 30.4
	3 | 32.5	3 | 29.6	3 | 30.6	3 | 32.6
	4 | 35.0	4 | 30.8	4 | 31.7	4 | 32.8
	5 | 31.8	5 | 30.9	5 | 33.0	5 | 29.8
Avg. Moisture of Sample Depth	32.9	30.5	31.7	31.4

Scott W. Wutzke, Testing Lab Supervisor
Date Printed: 1/15/2014

Linear Laboratory Analysis

Department of Transportation, Materials and Research Division
300 Airport Road, Bismarck ND 58504 (701) 328-6900

Report Number	SS-25-2012	**Date Reported**	7/9/2012	**District**	Fargo
County	CASS	**Submitted By**	Naumann	**Project Number**	IM-8-029(133)078
		AASHTO Test Method		**PCN**	18965

Comments

Lab Number	699	698	697	696
Reference Pt + Feet	80+3500	80+4000	80+4500	80+5000
Distance From CenterLine (Ft.)	Rt 22 SB	Rt 22 SB	Rt 22 SB	Rt 22 SB
Depth, Ft.	0.9 - 5.0	0.6 - 5.0	0.7 - 5.0	0.8 - 5.0
Field Sample No.	699	698	697	696
% Pass. 3/8" Sieve	100	100	100	100
% Pass. No. 4 Sieve	100	100	100	100
% Pass. No. 10 Sieve	99	100	100	100
% Coarse Sand (-No. 10 + No. 40)	2	1	1	1
% Fine Sand (-No. 40 + No. 200)	3	2	2	6
% Silt (0.074 - 0.005 mm)	27	30	28	22
% Clay (-0.005 mm)	69	67	69	71
Liquid Limit (-No. 40)	75	73	77	78
Plasticity Index (-No. 40)	46	44	51	51
Plastic Limit	29	29	27	27
Soil Color	BRN/BLK	BRN/BLK	BRN/BLK	BRN/BLK
Textural Class	CLY	CLY	CLY	CLY
Soil Class (AASHTO M-145)	A-7-6(52)	A-7-6(50)	A-7-6(57)	A-7-6(55)
Frost Class	F3	F3	F3	F3
Optimum Moisture (%)	24.5	27.6	25.7	26.9
Maximum Dry Density (pcf)	92.6	89.6	91.7	91.6
% Organic Content				
Depth (Ft.) | Moisture (%)	2 | 31.6	2 | 30.1	2 | 31.1	2 | 35.9
	3 | 30.4	3 | 29.9	3 | 31.7	3 | 31.8
	4 | 32.2	4 | 29.5	4 | 30.4	4 | 38.6
	5 | 33.8	5 | 32.9	5 | 35.4	5 | 33.5
Avg. Moisture of Sample Depth	32.0	30.6	32.2	35.0

Scott W. Wutzke, Testing Lab Supervisor
Date Printed: 1/15/2014

Linear Laboratory Analysis

Department of Transportation, Materials and Research Division
300 Airport Road, Bismarck ND 58504 (701) 328-6900

Report Number	SS-25-2012	**Date Reported**	7/9/2012	**District**	Fargo
County	CASS	**Submitted By**	Naumann	**Project Number**	IM-8-029(133)078
		AASHTO Test Method		**PCN**	18965

Comments

Lab Number	695	694	693	692
Reference Pt + Feet	81+0000	81+0500	81+1000	81+1500
Distance From CenterLine (Ft.)	Rt 22 SB	Rt 22 SB	Rt 22 SB	Rt 22 SB
Depth, Ft.	0.6 - 5.0	0.9 - 5.0	0.7 - 5.0	0.6 - 5.0
Field Sample No.	695	694	693	692
% Pass. 3/8" Sieve	100	100	100	100
% Pass. No. 4 Sieve	100	100	100	100
% Pass. No. 10 Sieve	100	100	100	99
% Coarse Sand (-No. 10 + No. 40)	1	1	1	1
% Fine Sand (-No. 40 + No. 200)	2	3	2	3
% Silt (0.074 - 0.005 mm)	30	29	23	26
% Clay (-0.005 mm)	68	67	73	69
Liquid Limit (-No. 40)	77	76	83	76
Plasticity Index (-No. 40)	50	49	58	48
Plastic Limit	27	27	25	28
Soil Color	BRN/BLK	BRN/BLK	BRN/BLK	BRN/BLK
Textural Class	CLY	CLY	CLY	CLY
Soil Class (AASHTO M-145)	A-7-6(57)	A-7-6(55)	A-7-6(64)	A-7-6(53)
Frost Class	F3	F3	F3	F3
Optimum Moisture (%)	27.2	27.1	27.2	26.9
Maximum Dry Density (pcf)	91.0	88.8	89.4	90.6
% Organic Content				
Depth (Ft.) | Moisture (%)	2 | 31.4	2 | 33.3	2 | 13.2	2 | 31.4
	3 | 30.9	3 | 33.1	3 | 34.5	3 | 32.9
	4 | 35.9	4 | 34.4	4 | 31.2	4 | 32.1
	5 | 35.6	5 | 31.7	5 | 35.3	5 | 30.8
Avg. Moisture of Sample Depth	33.5	33.1	28.5	31.8

Scott W. Wutzke, Testing Lab Supervisor
Date Printed: 1/15/2014

Linear Laboratory Analysis

Department of Transportation, Materials and Research Division
300 Airport Road, Bismarck ND 58504 (701) 328-6900

Report Number	SS-25-2012	**Date Reported**	7/9/2012	**District**	Fargo
County	CASS	**Submitted By**	Naumann	**Project Number**	IM-8-029(133)078
		AASHTO Test Method		**PCN**	18965

Comments

Lab Number	691	690	689	688
Reference Pt + Feet	81+2000	81+2500	81+3000	81+3500
Distance From CenterLine (Ft.)	Rt 22 SB	Rt 22 SB	Rt 22 SB	Rt 22 SB
Depth, Ft.	0.6 - 5.0	0.7 - 5.0	0.7 - 5.0	0.7 - 5.0
Field Sample No.	691	690	689	688
% Pass. 3/8" Sieve	100	100	100	100
% Pass. No. 4 Sieve	100	100	100	100
% Pass. No. 10 Sieve	100	100	99	100
% Coarse Sand (-No. 10 + No. 40)	1	1	2	1
% Fine Sand (-No. 40 + No. 200)	3	2	4	2
% Silt (0.074 - 0.005 mm)	29	25	23	30
% Clay (-0.005 mm)	67	71	70	67
Liquid Limit (-No. 40)	72	80	75	73
Plasticity Index (-No. 40)	44	51	49	47
Plastic Limit	29	29	26	26
Soil Color	BRN/BLK	BRN/BLK	BRN/BLK	BRN/BLK
Textural Class	CLY	CLY	CLY	CLY
Soil Class (AASHTO M-145)	A-7-6(49)	A-7-6(58)	A-7-6(53)	A-7-6(53)
Frost Class	F3	F3	F3	F3
Optimum Moisture (%)	28.1	25.7	25.1	26.3
Maximum Dry Density (pcf)	88.5	88.0	93.6	91.0
% Organic Content				
Depth (Ft.) | Moisture (%)	2 | 28.9	2 | 44.6	2 | 29.8	2 | 29.7
	3 | 31.1	3 | 32.9	3 | 35.5	3 | 31.1
	4 | 32.9	4 | 42.4	4 | 28.6	4 | 34.0
	5 | 33.1	5 | 42.5	5 | 31.0	5 | 32.6
Avg. Moisture of Sample Depth	31.5	40.5	31.2	31.9

Scott W. Wutzke, Testing Lab Supervisor
Date Printed: 1/15/2014

Linear Laboratory Analysis

Department of Transportation, Materials and Research Division
300 Airport Road, Bismarck ND 58504 (701) 328-6900

Report Number	SS-25-2012	**Date Reported**	7/9/2012	**District**	Fargo
County	CASS	**Submitted By**	Naumann	**Project Number**	IM-8-029(133)078
		AASHTO Test Method		**PCN**	18965

Comments

Lab Number	687	686	685	684
Reference Pt + Feet	81+4000	81+4500	81+5000	82+0000
Distance From CenterLine (Ft.)	Rt 22 SB	Rt 22 SB	Rt 22 SB	Rt 22 SB
Depth, Ft.	0.7 - 5.0	0.7 - 5.0	0.6 - 5.0	0.7 - 5.0
Field Sample No.	687	686	685	684
% Pass. 3/8" Sieve	100	100	100	100
% Pass. No. 4 Sieve	100	100	100	100
% Pass. No. 10 Sieve	99	100	99	100
% Coarse Sand (-No. 10 + No. 40)	1	1	2	1
% Fine Sand (-No. 40 + No. 200)	2	2	3	2
% Silt (0.074 - 0.005 mm)	25	27	30	26
% Clay (-0.005 mm)	71	69	65	71
Liquid Limit (-No. 40)	77	77	75	73
Plasticity Index (-No. 40)	48	49	50	42
Plastic Limit	29	28	26	31
Soil Color	BRN/BLK	BRN/BLK	BRN/BLK	BRN/BLK
Textural Class	CLY	CLY	CLY	CLY
Soil Class (AASHTO M-145)	A-7-6(54)	A-7-6(55)	A-7-6(54)	A-7-5(49)
Frost Class	F3	F3	F3	F3
Optimum Moisture (%)	25.6	27.1	25.4	27.1
Maximum Dry Density (pcf)	89.6	90.2	92.3	89.3
% Organic Content				
Depth (Ft.) | Moisture (%)	2 | 30.1	2 | 33.5	2 | 32.9	2 | 33.3
	3 | 31.1	3 | 33.3	3 | 29.4	3 | 29.9
	4 | 34.9	4 | 33.3	4 | 31.4	4 | 30.2
	5 | 31.5	5 | 28.9	5 | 34.0	5 | 30.4
Avg. Moisture of Sample Depth	31.9	32.3	32.0	30.9

Scott W. Wutzke, Testing Lab Supervisor
Date Printed: 1/15/2014

Linear Laboratory Analysis

Department of Transportation, Materials and Research Division
300 Airport Road, Bismarck ND 58504 (701) 328-6900

Report Number	SS-25-2012	**Date Reported**	7/9/2012	**District**	Fargo
County	CASS	**Submitted By**	Naumann	**Project Number**	IM-8-029(133)078
		AASHTO Test Method		**PCN**	18965

Comments

Lab Number	683	682	681	680
Reference Pt + Feet	82+0500	82+1000	82+1500	82+2000
Distance From CenterLine (Ft.)	Rt 22 SB	Rt 22 SB	Rt 22 SB	Rt 22 SB
Depth, Ft.	0.5 - 5.0	0.9 - 5.0	0.9 - 5.0	0.9 - 5.0
Field Sample No.	683	682	681	680
% Pass. 3/8" Sieve	100	100	100	100
% Pass. No. 4 Sieve	100	100	99	100
% Pass. No. 10 Sieve	99	99	99	99
% Coarse Sand (-No. 10 + No. 40)	2	2	1	2
% Fine Sand (-No. 40 + No. 200)	3	4	3	4
% Silt (0.074 - 0.005 mm)	26	25	28	29
% Clay (-0.005 mm)	69	69	67	65
Liquid Limit (-No. 40)	77	77	77	77
Plasticity Index (-No. 40)	48	49	51	50
Plastic Limit	29	28	26	27
Soil Color	BRN/BLK	BRN/BLK	BRN/BLK	BRN/BLK
Textural Class	CLY	CLY	CLY	CLY
Soil Class (AASHTO M-145)	A-7-6(54)	A-7-6(53)	A-7-6(56)	A-7-6(54)
Frost Class	F3	F3	F3	F3
Optimum Moisture (%)	27.1	26.4	26.5	26.5
Maximum Dry Density (pcf)	90.2	90.7	91.6	91.2
% Organic Content				
Depth (Ft.) | Moisture (%)	2 | 33.2	2 | 31.8	2 | 36.5	2 | 35.4
	3 | 35.7	3 | 36.3	3 | 32.3	3 | 32.1
	4 | 34.9	4 | 33.3	4 | 32.8	4 | 35.0
	5 | 34.6	5 | 32.0	5 | 31.8	5 | 34.9
Avg. Moisture of Sample Depth	34.6	33.3	33.4	34.4

Scott W. Wutzke, Testing Lab Supervisor
Date Printed: 1/15/2014

Linear Laboratory Analysis

Department of Transportation, Materials and Research Division
300 Airport Road, Bismarck ND 58504 (701) 328-6900

Report Number	SS-25-2012	**Date Reported**	7/9/2012	**District**	Fargo
County	CASS	**Submitted By**	Naumann	**Project Number**	IM-8-029(133)078
		AASHTO Test Method		**PCN**	18965

Comments

Lab Number	679	678	677	676
Reference Pt + Feet	82+2500	82+3000	82+3500	82+4000
Distance From CenterLine (Ft.)	Rt 22 SB	Rt 22 SB	Rt 22 SB	Rt 22 SB
Depth, Ft.	1.0 - 5.0	0.9 - 5.0	0.9 - 5.0	0.7 - 5.0
Field Sample No.	679	678	677	676
% Pass. 3/8" Sieve	100	100	100	100
% Pass. No. 4 Sieve	100	100	100	100
% Pass. No. 10 Sieve	100	99	99	99
% Coarse Sand (-No. 10 + No. 40)	2	2	2	2
% Fine Sand (-No. 40 + No. 200)	3	4	3	3
% Silt (0.074 - 0.005 mm)	28	25	11	28
% Clay (-0.005 mm)	67	69	83	67
Liquid Limit (-No. 40)	75	80	82	83
Plasticity Index (-No. 40)	49	52	48	52
Plastic Limit	26	28	34	31
Soil Color	BRN/GRY/BLK	BRN/BLK	BRN/BLK	BRN/GRY/BLK
Textural Class	CLY	CLY	CLY	CLY
Soil Class (AASHTO M-145)	A-7-6(53)	A-7-6(57)	A-7-5(54)	A-7-5(59)
Frost Class	F3	F3	F3	F3
Optimum Moisture (%)	27.0	25.7	28.7	27.4
Maximum Dry Density (pcf)	90.0	90.9	89.0	90.1
% Organic Content				
Depth (Ft.) | Moisture (%)	2 | 44.3	2 | 39.8	2 | 34.8	2 | 35.6
	3 | 30.8	3 | 30.6	3 | 31.4	3 | 33.3
	4 | 31.6	4 | 34.4	4 | 44.1	4 | 32.0
	5 | 39.2	5 | 35.0	5 | 35.3	5 | 39.5
Avg. Moisture of Sample Depth	36.5	34.9	36.4	35.2

Scott W. Wutzke, Testing Lab Supervisor
Date Printed: 1/15/2014

Linear Laboratory Analysis

Department of Transportation, Materials and Research Division
300 Airport Road, Bismarck ND 58504 (701) 328-6900

Report Number	SS-25-2012	**Date Reported**	7/9/2012	**District**	Fargo
County	CASS	**Submitted By**	Naumann	**Project Number**	IM-8-029(133)078
		AASHTO Test Method		**PCN**	18965

Comments

Lab Number	675	674	673	672
Reference Pt + Feet	82+4500	82+5000	83+0000	83+0500
Distance From CenterLine (Ft.)	Rt 22 SB	Rt 22 SB	Rt 22 SB	Rt 22 SB
Depth, Ft.	0.7 - 5.0	0.6 - 5.0	0.7 - 5.0	0.6 - 5.0
Field Sample No.	675	674	673	672
% Pass. 3/8" Sieve	100	100	100	100
% Pass. No. 4 Sieve	100	100	100	100
% Pass. No. 10 Sieve	99	100	100	99
% Coarse Sand (-No. 10 + No. 40)	1	1	1	2
% Fine Sand (-No. 40 + No. 200)	2	3	3	3
% Silt (0.074 - 0.005 mm)	31	29	26	20
% Clay (-0.005 mm)	65	67	69	75
Liquid Limit (-No. 40)	82	73	73	86
Plasticity Index (-No. 40)	54	46	46	59
Plastic Limit	28	27	27	27
Soil Color	BRN/GRY/BLK	BRN/GRY/BLK	BRN/GRY/BLK	BLK/GRY
Textural Class	CLY	CLY	CLY	CLY
Soil Class (AASHTO M-145)	A-7-6(60)	A-7-6(51)	A-7-6(51)	A-7-6(65)
Frost Class	F3	F3	F3	F3
Optimum Moisture (%)	26.3	25.9	26.4	26.3
Maximum Dry Density (pcf)	90.5	91.4	91.8	90.8
% Organic Content				
Depth (Ft.) | Moisture (%)	2 | 43.6	2 | 30.6	2 | 32.6	2 | 31.6
	3 | 31.6	3 | 31.3	3 | 28.9	3 | 41.6
	4 | 34.8	4 | 30.7	4 | 32.6	4 | 35.2
	5 | 34.7	5 | 29.6	5 | 36.2	5 | 31.9
Avg. Moisture of Sample Depth	36.2	30.5	32.5	35.1

Scott W. Wutzke, Testing Lab Supervisor
Date Printed: 1/15/2014

Linear Laboratory Analysis

Department of Transportation, Materials and Research Division
300 Airport Road, Bismarck ND 58504 (701) 328-6900

Report Number	SS-25-2012	**Date Reported**	7/9/2012	**District**	Fargo
County	CASS	**Submitted By**	Naumann	**Project Number**	IM-8-029(133)078
		AASHTO Test Method		**PCN**	18965

Comments

Lab Number	671	670	669	668
Reference Pt + Feet	83+1000	83+1500	83+2000	83+2500
Distance From CenterLine (Ft.)	Rt 22 SB	Rt 22 SB	Rt 22 SB	Rt 22 SB
Depth, Ft.	0.8 - 5.0	0.7 - 5.0	0.6 - 5.0	0.6 - 5.0
Field Sample No.	671	670	669	668
% Pass. 3/8" Sieve	100	100	100	100
% Pass. No. 4 Sieve	100	100	100	100
% Pass. No. 10 Sieve	99	100	99	99
% Coarse Sand (-No. 10 + No. 40)	2	1	1	2
% Fine Sand (-No. 40 + No. 200)	4	3	4	4
% Silt (0.074 - 0.005 mm)	22	28	34	20
% Clay (-0.005 mm)	71	67	61	73
Liquid Limit (-No. 40)	75	76	68	82
Plasticity Index (-No. 40)	50	49	38	53
Plastic Limit	25	27	30	28
Soil Color	BLK/GRY	BLK/GRY	BLK/GRY	BLK/GRY
Textural Class	CLY	CLY	CLY	CLY
Soil Class (AASHTO M-145)	A-7-6(53)	A-7-6(55)	A-7-5(42)	A-7-6(57)
Frost Class	F3	F3	F3	F3
Optimum Moisture (%)	25.6	24.1	23.6	25.9
Maximum Dry Density (pcf)	92.2	91.8	92.5	93.0
% Organic Content				
Depth (Ft.) | Moisture (%)	2 | 33.9	2 | 31.5	2 | 33.7	2 | 33.8
	3 | 33.5	3 | 28.5	3 | 34.3	3 | 31.2
	4 | 33.6	4 | 33.3	4 | 32.4	4 | 23.6
	5 | 35.7	5 | 34.0	5 | 32.2	5 | 32.8
Avg. Moisture of Sample Depth	34.2	31.8	33.2	30.3

Scott W. Wutzke, Testing Lab Supervisor
Date Printed: 1/15/2014

Linear Laboratory Analysis

Department of Transportation, Materials and Research Division
300 Airport Road, Bismarck ND 58504 (701) 328-6900

Report Number	SS-25-2012	**Date Reported**	7/9/2012	**District**	Fargo
County	CASS	**Submitted By**	Naumann	**Project Number**	IM-8-029(133)078
		AASHTO Test Method		**PCN**	18965

Comments

Lab Number	667	666	665	664
Reference Pt + Feet	83+3000	83+3780	83+4280	83+4780
Distance From CenterLine (Ft.)	Rt 22 SB	Rt 22 SB	Rt 22 SB	Rt 22 SB
Depth, Ft.	0.7 - 5.0	0.7 - 5.0	0.8 - 5.0	0.7 - 5.0
Field Sample No.	667	666	665	664
% Pass. 3/8" Sieve	100	100	100	100
% Pass. No. 4 Sieve	100	99	100	100
% Pass. No. 10 Sieve	99	99	99	100
% Coarse Sand (-No. 10 + No. 40)	3	2	1	2
% Fine Sand (-No. 40 + No. 200)	5	4	3	3
% Silt (0.074 - 0.005 mm)	32	26	28	24
% Clay (-0.005 mm)	60	66	67	71
Liquid Limit (-No. 40)	67	70	74	78
Plasticity Index (-No. 40)	43	43	45	50
Plastic Limit	24	27	29	28
Soil Color	BRN/GRY/BLK	BRN/GRY/BLK	BRN/GRY/BLK	BRN/GRY/BLK
Textural Class	CLY	CLY	CLY	CLY
Soil Class (AASHTO M-145)	A-7-6(44)	A-7-6(45)	A-7-6(50)	A-7-6(55)
Frost Class	F3	F3	F3	F3
Optimum Moisture (%)	24.2	25.3	25.8	27.1
Maximum Dry Density (pcf)	95.6	92.2	90.5	90.5
% Organic Content				
Depth (Ft.) | Moisture (%)	2 | 31.7	2 | 32.0	2 | 35.5	2 | 30.2
	3 | 30.2	3 | 31.8	3 | 29.8	3 | 30.1
	4 | 30.2	4 | 35.2	4 | 33.0	4 | 32.2
	5 | 28.6	5 | 32.3	5 | 31.4	5 | 32.3
Avg. Moisture of Sample Depth	30.2	32.8	32.4	31.3

Scott W. Wutzke, Testing Lab Supervisor
Date Printed: 1/15/2014

Linear Laboratory Analysis

Department of Transportation, Materials and Research Division
300 Airport Road, Bismarck ND 58504 (701) 328-6900

Report Number	SS-25-2012	**Date Reported**	7/9/2012	**District**	Fargo
County	CASS	**Submitted By**	Naumann	**Project Number**	IM-8-029(133)078
		AASHTO Test Method		**PCN**	18965

Comments

Lab Number	663	662	661	660
Reference Pt + Feet	83+5000	84+0000	84+0500	84+1000
Distance From CenterLine (Ft.)	Rt 22 SB	Rt 22 SB	Rt 22 SB	Rt 22 SB
Depth, Ft.	0.7 - 5.0	0.7 - 5.0	0.7 - 5.0	0.7 - 5.0
Field Sample No.	663	662	661	660
% Pass. 3/8" Sieve	100	100	100	100
% Pass. No. 4 Sieve	100	100	100	100
% Pass. No. 10 Sieve	100	99	99	99
% Coarse Sand (-No. 10 + No. 40)	1	2	2	2
% Fine Sand (-No. 40 + No. 200)	2	4	3	5
% Silt (0.074 - 0.005 mm)	25	30	27	34
% Clay (-0.005 mm)	71	62	67	58
Liquid Limit (-No. 40)	77	67	72	65
Plasticity Index (-No. 40)	48	40	44	38
Plastic Limit	29	27	28	27
Soil Color	BRN/GRY/BLK	BRN/GRY/BLK	BRN/GRY/BLK	BRN/BLK
Textural Class	CLY	CLY	CLY	CLY
Soil Class (AASHTO M-145)	A-7-6(55)	A-7-6(42)	A-7-6(48)	A-7-6(40)
Frost Class	F3	F3	F3	F3
Optimum Moisture (%)	26.0	24.7	26.9	25.3
Maximum Dry Density (pcf)	91.0	92.9	91.3	90.7
% Organic Content				
Depth (Ft.) | Moisture (%)	2 | 32.3	2 | 30.0	2 | 28.5	2 | 30.6
	3 | 32.4	3 | 27.3	3 | 26.5	3 | 36.8
	4 | 33.5	4 | 33.3	4 | 33.0	4 | 32.1
	5 | 35.6	5 | 30.8	5 | 32.5	5 | 32.6
Avg. Moisture of Sample Depth	33.5	30.4	30.1	33.0

Scott W. Wutzke, Testing Lab Supervisor
Date Printed: 1/15/2014

Linear Laboratory Analysis

Department of Transportation, Materials and Research Division
300 Airport Road, Bismarck ND 58504 (701) 328-6900

Report Number	SS-25-2012	**Date Reported**	7/9/2012	**District**	Fargo
County	CASS	**Submitted By**	Naumann	**Project Number**	IM-8-029(133)078
		AASHTO Test Method		**PCN**	18965

Comments

Lab Number	659	658	657	656
Reference Pt + Feet	84+1500	84+2000	84+2500	84+3000
Distance From CenterLine (Ft.)	Rt 22 SB	Rt 22 SB	Rt 22 SB	Rt 22 SB
Depth, Ft.	0.7 - 5.0	0.7 - 5.0	0.8 - 5.0	0.6 - 5.0
Field Sample No.	659	658	657	656
% Pass. 3/8" Sieve	100	100	100	100
% Pass. No. 4 Sieve	99	99	100	100
% Pass. No. 10 Sieve	99	98	100	100
% Coarse Sand (-No. 10 + No. 40)	2	4	1	1
% Fine Sand (-No. 40 + No. 200)	3	5	4	3
% Silt (0.074 - 0.005 mm)	27	29	43	31
% Clay (-0.005 mm)	67	60	52	65
Liquid Limit (-No. 40)	72	67	49	69
Plasticity Index (-No. 40)	45	43	26	40
Plastic Limit	26	24	23	29
Soil Color	BRN/GRY/BLK	BRN/GRY/BLK	BLK	BRN/GRY/BLK
Textural Class	CLY	CLY	CLY	CLY
Soil Class (AASHTO M-145)	A-7-6(49)	A-7-6(42)	A-7-6(27)	A-7-6(45)
Frost Class	F3	F3	F3	F3
Optimum Moisture (%)	28.0	25.8	24.5	26.8
Maximum Dry Density (pcf)	88.9	91.3	93.5	87.6
% Organic Content				
Depth (Ft.) | Moisture (%)	2 | 31.6	2 | 33.8	2 | 34.8	2 | 33.1
	3 | 31.0	3 | 35.5	3 | 32.7	3 | 31.1
	4 | 32.7	4 | 36.8	4 | 33.6	4 | 37.5
	5 | 33.1	5 | 32.6	5 | 31.1	5 | 33.2
Avg. Moisture of Sample Depth	32.1	34.7	33.0	33.7

Scott W. Wutzke, Testing Lab Supervisor
Date Printed: 1/15/2014

Linear Laboratory Analysis

Department of Transportation, Materials and Research Division
300 Airport Road, Bismarck ND 58504 (701) 328-6900

Report Number	SS-25-2012	**Date Reported**	7/9/2012	**District**	Fargo
County	CASS	**Submitted By**	Naumann	**Project Number**	IM-8-029(133)078
		AASHTO Test Method		**PCN**	18965

Comments

Lab Number	655	654	653	652
Reference Pt + Feet	84+3500	84+4000	84+4500	84+5000
Distance From CenterLine (Ft.)	Rt 22 SB	Rt 22 SB	Rt 22 SB	Rt 22 SB
Depth, Ft.	0.7 - 5.0	0.8 - 5.0	1.2 - 5.0	0.7 - 5.0
Field Sample No.	655	654	653	652
% Pass. 3/8" Sieve	100	100	100	100
% Pass. No. 4 Sieve	100	100	100	99
% Pass. No. 10 Sieve	100	100	99	99
% Coarse Sand (-No. 10 + No. 40)	2	1	2	1
% Fine Sand (-No. 40 + No. 200)	3	3	4	3
% Silt (0.074 - 0.005 mm)	28	27	30	34
% Clay (-0.005 mm)	67	69	63	60
Liquid Limit (-No. 40)	74	74	72	66
Plasticity Index (-No. 40)	46	47	41	38
Plastic Limit	28	28	31	29
Soil Color	BRN/GRY/BLK	BRN/GRY/BLK	BRN/GRY/BLK	DRK GRY
Textural Class	CLY	CLY	CLY	CLY
Soil Class (AASHTO M-145)	A-7-6(51)	A-7-6(53)	A-7-5(45)	A-7-6(42)
Frost Class	F3	F3	F3	F3
Optimum Moisture (%)	27.1	25.7	25.0	28.0
Maximum Dry Density (pcf)	90.6	91.2	89.4	88.5
% Organic Content				
Depth (Ft.) | Moisture (%)	2 | 31.7	2 | 31.1	2 | 40.3	2 | 30.0
	3 | 30.0	3 | 32.3	3 | 29.4	3 | 29.0
	4 | 33.0	4 | 32.0	4 | 33.1	4 | 26.0
	5 | 30.4	5 | 31.2	5 | 32.8	5 | 30.4
Avg. Moisture of Sample Depth	31.2	31.6	33.9	28.8

Scott W. Wutzke, Testing Lab Supervisor
Date Printed: 1/15/2014

Linear Laboratory Analysis

Department of Transportation, Materials and Research Division
300 Airport Road, Bismarck ND 58504 (701) 328-6900

Report Number	SS-25-2012	**Date Reported**	7/9/2012	**District**	Fargo
County	CASS	**Submitted By**	Naumann	**Project Number**	IM-8-029(133)078
		AASHTO Test Method		**PCN**	18965

Comments

Lab Number	651	650	649	648
Reference Pt + Feet	85+0000	85+0500	85+1000	85+1500
Distance From CenterLine (Ft.)	Rt 22 SB	Rt 22 SB	Rt 22 SB	Rt 22 SB
Depth, Ft.	0.7 - 5.0	0.7 - 5.0	0.6 - 5.0	0.8 - 5.0
Field Sample No.	651	650	649	648
% Pass. 3/8" Sieve	100	100	100	100
% Pass. No. 4 Sieve	99	100	100	98
% Pass. No. 10 Sieve	98	99	100	97
% Coarse Sand (-No. 10 + No. 40)	2	1	1	3
% Fine Sand (-No. 40 + No. 200)	3	3	2	4
% Silt (0.074 - 0.005 mm)	21	27	32	28
% Clay (-0.005 mm)	73	69	65	61
Liquid Limit (-No. 40)	82	73	74	73
Plasticity Index (-No. 40)	54	48	45	46
Plastic Limit	29	26	29	27
Soil Color	BRN/GRY/BLK	DRK GRY	BLK/GRY	DRK GRY
Textural Class	CLY	CLY	CLY	CLY
Soil Class (AASHTO M-145)	A-7-6(59)	A-7-6(52)	A-7-6(52)	A-7-6(47)
Frost Class	F3	F3	F3	F3
Optimum Moisture (%)	28.8	28.2	26.9	25.9
Maximum Dry Density (pcf)	87.2	88.7	85.9	85.4
% Organic Content				
Depth (Ft.) | Moisture (%)	2 | 31.3	2 | 32.1	2 | 32.0	2 | 30.4
	3 | 33.9	3 | 34.6	3 | 32.9	3 | 31.1
	4 | 33.3	4 | 31.5	4 | 31.1	4 | 33.8
	5 | 36.6	5 | 33.7	5 | 32.4	5 | 34.3
Avg. Moisture of Sample Depth	33.7	33.0	32.1	32.3

Scott W. Wutzke, Testing Lab Supervisor
Date Printed: 1/15/2014

Linear Laboratory Analysis

Department of Transportation, Materials and Research Division
300 Airport Road, Bismarck ND 58504 (701) 328-6900

Report Number	SS-25-2012	**Date Reported**	7/9/2012	**District**	Fargo
County	CASS	**Submitted By**	Naumann	**Project Number**	IM-8-029(133)078
		AASHTO Test Method		**PCN**	18965

Comments

Lab Number	647	646	645	644
Reference Pt + Feet	85+2000	85+2500	85+3000	85+3500
Distance From CenterLine (Ft.)	Rt 22 SB	Rt 22 SB	Rt 33 SB	Rt 33 SB
Depth, Ft.	0.9 - 5.0	0.1 - 5.0	0.6 - 5.0	0.8 - 5.0
Field Sample No.	647	646	645	644
% Pass. 3/8" Sieve	100	100	100	100
% Pass. No. 4 Sieve	100	100	100	100
% Pass. No. 10 Sieve	99	99	100	99
% Coarse Sand (-No. 10 + No. 40)	2	2	0	1
% Fine Sand (-No. 40 + No. 200)	3	3	2	2
% Silt (0.074 - 0.005 mm)	28	25	28	25
% Clay (-0.005 mm)	67	69	70	71
Liquid Limit (-No. 40)	75	76	75	80
Plasticity Index (-No. 40)	44	47	47	28
Plastic Limit	30	29	28	52
Soil Color	BLK/GRY	BRN/GRY/BLK	BRN/GRY/BLK	BRN/GRY/BLK
Textural Class	CLY	CLY	CLY	CLY
Soil Class (AASHTO M-145)	A-7-5(50)	A-7-6(52)	A-7-6(54)	A-7-5(39)
Frost Class	F3	F3	F3	F4
Optimum Moisture (%)	25.4	27.3	26.6	26.7
Maximum Dry Density (pcf)	92.5	86.1	89.4	88.6
% Organic Content				
Depth (Ft.) | Moisture (%)	2 | 31.6	2 | 35.1	2 | 32.1	2 | 35.6
	3 | 29.5	3 | 30.8	3 | 35.9	3 | 32.7
	4 | 30.6	4 | 33.0	4 | 33.3	4 | 37.3
	5 | 30.4	5 | 33.9	5 | 30.9	5 | 34.8
Avg. Moisture of Sample Depth	30.6	33.1	33.1	35.1

Scott W. Wutzke, Testing Lab Supervisor
Date Printed: 1/15/2014

Linear Laboratory Analysis

Department of Transportation, Materials and Research Division
300 Airport Road, Bismarck ND 58504 (701) 328-6900

Report Number	SS-25-2012	**Date Reported**	7/9/2012	**District**	Fargo
County	CASS	**Submitted By**	Naumann	**Project Number**	IM-8-029(133)078
		AASHTO Test Method		**PCN**	18965

Comments

Lab Number	643	642	641	640
Reference Pt + Feet	85+4000	85+4500	85+5000	86+0000
Distance From CenterLine (Ft.)	Rt 22 SB	Rt 22 SB	Rt 22 SB	Rt 22 SB
Depth, Ft.	1.2 - 5.0	1.0 - 5.0	1.0 - 5.0	1.0 - 5.0
Field Sample No.	643	642	641	640
% Pass. 3/8" Sieve	100	100	100	100
% Pass. No. 4 Sieve	100	100	100	100
% Pass. No. 10 Sieve	99	100	99	99
% Coarse Sand (-No. 10 + No. 40)	3	1	1	1
% Fine Sand (-No. 40 + No. 200)	4	3	3	2
% Silt (0.074 - 0.005 mm)	24	28	31	25
% Clay (-0.005 mm)	69	67	65	72
Liquid Limit (-No. 40)	74	69	70	78
Plasticity Index (-No. 40)	44	41	40	48
Plastic Limit	30	27	30	30
Soil Color	BRN/GRY	BRN/GRY/BLK	BRN/GRY/BLK	BRN/GRY/BLK
Textural Class	CLY	CLY	CLY	CLY
Soil Class (AASHTO M-145)	A-7-5(47)	A-7-6(46)	A-7-5(45)	A-7-5(54)
Frost Class	F3	F3	F3	F3
Optimum Moisture (%)	27.7	25.0	26.1	27.7
Maximum Dry Density (pcf)	89.0	91.1	91.1	88.8
% Organic Content				
Depth (Ft.) | Moisture (%)	2 | 34.3	2 | 40.0	2 | 37.3	2 | 49.7
	3 | 32.0	3 | 27.3	3 | 30.5	3 | 32.7
	4 | 30.7	4 | 31.5	4 | 31.1	4 | 31.8
	5 | 30.6	5 | 30.5	5 | 29.0	5 | 31.4
Avg. Moisture of Sample Depth	31.9	32.4	32.0	36.4

Scott W. Wutzke, Testing Lab Supervisor
Date Printed: 1/15/2014

Linear Laboratory Analysis

Department of Transportation, Materials and Research Division
300 Airport Road, Bismarck ND 58504 (701) 328-6900

Report Number	SS-25-2012	**Date Reported**	7/9/2012	**District**	Fargo
County	CASS	**Submitted By**	Naumann	**Project Number**	IM-8-029(133)078
		AASHTO Test Method		**PCN**	18965

Comments

Lab Number	639	638	637	636
Reference Pt + Feet	86+1000	86+1500	86+2000	86+2500
Distance From CenterLine (Ft.)	Rt 22 SB	Rt 22 SB	Rt 22 SB	Rt 22 SB
Depth, Ft.	0.4 - 5.0	0.5 - 5.0	0.6 - 5.0	0.9 - 5.0
Field Sample No.	639	638	637	636
% Pass. 3/8" Sieve	100	100	100	100
% Pass. No. 4 Sieve	100	100	100	100
% Pass. No. 10 Sieve	100	100	99	100
% Coarse Sand (-No. 10 + No. 40)	1	1	2	1
% Fine Sand (-No. 40 + No. 200)	2	2	3	2
% Silt (0.074 - 0.005 mm)	30	28	27	28
% Clay (-0.005 mm)	67	69	67	69
Liquid Limit (-No. 40)	72	74	70	73
Plasticity Index (-No. 40)	43	45	40	44
Plastic Limit	29	29	29	29
Soil Color	BRN/GRY/BLK	BRN/GRY/BLK	BRN/GRY/BLK	BRN/GRY/BLK
Textural Class	CLY	CLY	CLY	CLY
Soil Class (AASHTO M-145)	A-7-6(49)	A-7-6(52)	A-7-5(45)	A-7-6(50)
Frost Class	F3	F3	F3	F3
Optimum Moisture (%)	26.7	27.9	26.0	26.7
Maximum Dry Density (pcf)	90.0	89.3	92.0	90.9
% Organic Content				
Depth (Ft.) | Moisture (%)	2 | 31.9	2 | 30.3	2 | 30.3	2 | 33.3
	3 | 30.8	3 | 32.2	3 | 29.5	3 | 31.1
	4 | 30.1	4 | 31.7	4 | 31.9	4 | 31.4
	5 | 33.2	5 | 31.8	5 | 34.0	5 | 35.8
Avg. Moisture of Sample Depth	31.5	31.5	31.4	32.9

Scott W. Wutzke, Testing Lab Supervisor
Date Printed: 1/15/2014

Linear Laboratory Analysis

Department of Transportation, Materials and Research Division
300 Airport Road, Bismarck ND 58504 (701) 328-6900

Report Number	SS-25-2012	**Date Reported**	7/9/2012	**District**	Fargo
County	CASS	**Submitted By**	Naumann	**Project Number**	IM-8-029(133)078
		AASHTO Test Method		**PCN**	18965

Comments

Lab Number	635	634	633	632
Reference Pt + Feet	86+3000	86+3500	86+4000	86+4500
Distance From CenterLine (Ft.)	Rt 22 SB	Rt 22 SB	Rt 22 SB	Rt 22 SB
Depth, Ft.	0.8 - 5.0	0.8 - 5.0	0.7 - 5.0	0.6 - 5.0
Field Sample No.	635	634	633	632
% Pass. 3/8" Sieve	100	100	100	100
% Pass. No. 4 Sieve	100	100	100	100
% Pass. No. 10 Sieve	100	100	100	100
% Coarse Sand (-No. 10 + No. 40)	1	1	1	0
% Fine Sand (-No. 40 + No. 200)	3	3	2	1
% Silt (0.074 - 0.005 mm)	31	29	21	14
% Clay (-0.005 mm)	65	67	76	84
Liquid Limit (-No. 40)	68	68	80	94
Plasticity Index (-No. 40)	38	39	48	58
Plastic Limit	29	29	32	35
Soil Color	BRN/GRY/BLK	BRN/GRY/BLK	BRN/GRY/BLK	BRN/GRY/BLK
Textural Class	CLY	CLY	CLY	CLY
Soil Class (AASHTO M-145)	A-7-5(44)	A-7-6(45)	A-7-5(55)	A-7-5(70)
Frost Class	F3	F3	F3	F3
Optimum Moisture (%)	26.7	27.1	27.4	27.6
Maximum Dry Density (pcf)	90.7	90.6	87.9	84.2
% Organic Content				
Depth (Ft.) | Moisture (%)	2 | 32.8	2 | 34.2	2 | 30.5	2 | 32.7
	3 | 31.2	3 | 35.9	3 | 30.5	3 | 38.0
	4 | 34.2	4 | 34.1	4 | 33.0	4 | 36.8
	5 | 28.8	5 | 30.8	5 | 47.3	5 | 38.3
Avg. Moisture of Sample Depth	31.7	33.7	35.3	36.5

Scott W. Wutzke, Testing Lab Supervisor
Date Printed: 1/15/2014

Linear Laboratory Analysis

Department of Transportation, Materials and Research Division
300 Airport Road, Bismarck ND 58504 (701) 328-6900

Report Number	SS-25-2012	**Date Reported**	7/9/2012	**District**	Fargo
County	CASS	**Submitted By**	Naumann	**Project Number**	IM-8-029(133)078
		AASHTO Test Method		**PCN**	18965

Comments

Lab Number	631	630	629	628
Reference Pt + Feet	86+5000	87+0000	87+0500	87+1000
Distance From CenterLine (Ft.)	Rt 22 SB	Rt 22 SB	Rt 22 SB	Rt 22 SB
Depth, Ft.	0.6 - 5.0	0.8 - 5.0	0.8 - 5.0	0.7 - 5.0
Field Sample No.	631	630	629	628
% Pass. 3/8" Sieve	100	100	100	100
% Pass. No. 4 Sieve	100	100	100	99
% Pass. No. 10 Sieve	100	100	100	99
% Coarse Sand (-No. 10 + No. 40)	1	1	1	2
% Fine Sand (-No. 40 + No. 200)	2	2	3	3
% Silt (0.074 - 0.005 mm)	26	29	33	29
% Clay (-0.005 mm)	71	67	63	64
Liquid Limit (-No. 40)	77	77	67	69
Plasticity Index (-No. 40)	46	47	38	39
Plastic Limit	32	31	29	30
Soil Color	BRN/GRY/BLK	BRN/GRY/BLK	BRN/GRY/BLK	BRN/GRY/BLK
Textural Class	CLY	CLY	CLY	CLY
Soil Class (AASHTO M-145)	A-7-5(54)	A-7-5(53)	A-7-6(43)	A-7-5(43)
Frost Class	F3	F3	F3	F3
Optimum Moisture (%)	27.8	27.6	25.9	26.7
Maximum Dry Density (pcf)	88.2	88.9	91.7	90.8
% Organic Content				
Depth (Ft.) | Moisture (%)	2 | 28.6	2 | 35.6	2 | 32.2	2 | 36.1
	3 | 30.0	3 | 33.5	3 | 35.2	3 | 32.2
	4 | 29.7	4 | 33.9	4 | 32.2	4 | 33.3
	5 | 29.1	5 | 29.9	5 | 28.5	5 | 30.5
Avg. Moisture of Sample Depth	29.3	33.2	32.0	33.0

Scott W. Wutzke, Testing Lab Supervisor
Date Printed: 1/15/2014

Linear Laboratory Analysis

Department of Transportation, Materials and Research Division
300 Airport Road, Bismarck ND 58504 (701) 328-6900

Report Number	SS-25-2012	**Date Reported**	7/9/2012	**District**	Fargo
County	CASS	**Submitted By**	Naumann	**Project Number**	IM-8-029(133)078
		AASHTO Test Method		**PCN**	18965

Comments

Lab Number	627	626	625	624
Reference Pt + Feet	87+1500	87+2000	87+2500	87+3000
Distance From CenterLine (Ft.)	Rt 22 SB	Rt 22 SB	Rt 22 SB	Rt 22 SB
Depth, Ft.	0.8 - 5.0	0.6 - 5.0	0.9 - 5.0	0.8 - 5.0
Field Sample No.	627	626	625	624
% Pass. 3/8" Sieve	100	100	100	100
% Pass. No. 4 Sieve	100	100	100	100
% Pass. No. 10 Sieve	100	99	99	99
% Coarse Sand (-No. 10 + No. 40)	1	2	1	2
% Fine Sand (-No. 40 + No. 200)	3	3	3	3
% Silt (0.074 - 0.005 mm)	35	28	22	26
% Clay (-0.005 mm)	61	67	73	69
Liquid Limit (-No. 40)	68	73	76	72
Plasticity Index (-No. 40)	40	47	47	45
Plastic Limit	28	25	29	27
Soil Color	BRN/GRY/BLK	BRN/GRY/BLK	BRN/GRY/BLK	BRN/GRY
Textural Class	CLY	CLY	CLY	CLY
Soil Class (AASHTO M-145)	A-7-6(45)	A-7-6(52)	A-7-6(53)	A-7-6(49)
Frost Class	F3	F3	F3	F3
Optimum Moisture (%)	23.8	26.0	25.9	26.4
Maximum Dry Density (pcf)	92.3	91.0	91.5	90.4
% Organic Content				
Depth (Ft.) | Moisture (%)	2 | 32.6	2 | 35.4	2 | 35.0	2 | 33.5
	3 | 32.4	3 | 32.0	3 | 29.0	3 | 30.6
	4 | 31.1	4 | 34.7	4 | 32.2	4 | 34.7
	5 | 30.3	5 | 28.9	5 | 25.0	5 | 33.3
Avg. Moisture of Sample Depth	31.6	32.7	30.3	33.0

Scott W. Wutzke, Testing Lab Supervisor
Date Printed: 1/15/2014

Linear Laboratory Analysis

Department of Transportation, Materials and Research Division
300 Airport Road, Bismarck ND 58504 (701) 328-6900

Report Number	SS-25-2012	**Date Reported**	7/9/2012	**District**	Fargo
County	CASS	**Submitted By**	Naumann	**Project Number**	IM-8-029(133)078
		AASHTO Test Method		**PCN**	18965

Comments

Lab Number	623	622	621	620
Reference Pt + Feet	87+3500	87+4000	87+4500	87+5000
Distance From CenterLine (Ft.)	Rt 22 SB	Rt 22 SB	Rt 22 SB	Rt 22 SB
Depth, Ft.	0.7 - 5.0	0.7 - 5.0	0.8 - 5.0	0.7 - 5.0
Field Sample No.	623	622	621	620
% Pass. 3/8" Sieve	100	100	100	100
% Pass. No. 4 Sieve	98	100	100	99
% Pass. No. 10 Sieve	96	99	99	98
% Coarse Sand (-No. 10 + No. 40)	4	3	3	2
% Fine Sand (-No. 40 + No. 200)	5	5	5	3
% Silt (0.074 - 0.005 mm)	27	32	27	34
% Clay (-0.005 mm)	60	60	65	59
Liquid Limit (-No. 40)	65	63	70	67
Plasticity Index (-No. 40)	37	35	42	38
Plastic Limit	28	28	28	29
Soil Color	BRN/GRY/BLK	BRN/GRY/BLK	BRN/GRY/BLK	BRN/GRY/BLK
Textural Class	CLY	CLY	CLY	CLY
Soil Class (AASHTO M-145)	A-7-6(36)	A-7-6(37)	A-7-6(44)	A-7-6(41)
Frost Class	F3	F3	F3	F3
Optimum Moisture (%)	25.0	25.3	24.2	24.0
Maximum Dry Density (pcf)	91.5	90.2	93.9	89.6
% Organic Content				
Depth (Ft.) | Moisture (%)	2 | 32.0	2 | 29.8	2 | 35.8	2 | 37.0
	3 | 29.5	3 | 30.6	3 | 35.5	3 | 30.8
	4 | 33.0	4 | 32.8	4 | 28.4	4 | 33.9
	5 | 32.9	5 | 36.5	5 | 33.1	5 | 35.5
Avg. Moisture of Sample Depth	31.8	32.5	33.2	34.3

Scott W. Wutzke, Testing Lab Supervisor
Date Printed: 1/15/2014

Linear Laboratory Analysis

Department of Transportation, Materials and Research Division
300 Airport Road, Bismarck ND 58504 (701) 328-6900

Report Number	SS-25-2012	**Date Reported**	7/9/2012	**District**	Fargo
County	CASS	**Submitted By**	Naumann	**Project Number**	IM-8-029(133)078
		AASHTO Test Method		**PCN**	18965

Comments

Lab Number	619		
Reference Pt + Feet	88+0000		
Distance From CenterLine (Ft.)	Rt 22 SB		
Depth, Ft.	0.7 - 5.0		
Field Sample No.	619		
% Pass. 3/8" Sieve	100		
% Pass. No. 4 Sieve	100		
% Pass. No. 10 Sieve	99		
% Coarse Sand (-No. 10 + No. 40)	1		
% Fine Sand (-No. 40 + No. 200)	2		
% Silt (0.074 - 0.005 mm)	27		
% Clay (-0.005 mm)	68		
Liquid Limit (-No. 40)	67		
Plasticity Index (-No. 40)	38		
Plastic Limit	29		
Soil Color	BRN/BLK		
Textural Class	CLY		
Soil Class (AASHTO M-145)	A-7-6(43)		
Frost Class	F3		
Optimum Moisture (%)	26.6		
Maximum Dry Density (pcf)	90.7		
% Organic Content			
Depth (Ft.) | Moisture (%)	2	|	29.8
	3	|	34.0
	4	|	31.5
	5	|	12.7
Avg. Moisture of Sample Depth	27.0		

Scott W. Wutzke, Testing Lab Supervisor
Date Printed: 1/15/2014