DESIGN DATA				
Traffic	Average Daily			Max.Hr.
Current 2013	Pass: 2,155	Trucks: 300	Total: 2,455	250
Forecast 2033	Pass: 3,215	Trucks: 450	Total: 3,665	370

Clear Zone Distance: Existing	Design Speed: 65 mph
Minimum Sight Dist. for Stopping: 645'	Bridges: None
Sight Dist. for No Passing Zone: 2285'	
Partial Access Control	
Pavement Design Life 20 (years)	Design ESALs: 864,683

STATE	PROJECT NO.	PCN	SECTION NO.	SHEET NO.
ND	SHE-4-083(113)219	18917	1	1

JOB # 10
NORTH DAKOTA
DEPARTMENT OF TRANSPORTATION

SHE-4-083(113)219

Bottineau & Renville Counties
N of Minot, from 83rd St. NW to Glenburn Rd.
Turn Lanes and Pavement Markings

GOVERNING SPECIFICATIONS:
2014 Standard Specifications adopted by the North Dakota Department of Transportation and the Supplemental Specifications effective on the date the project is advertised.

PROJECT NUMBER \ DESCRIPTION	NET MILES	GROSS MILES
SHE-4-083(113)219 Turn Lane Const.	0.77 miles	8.31 miles

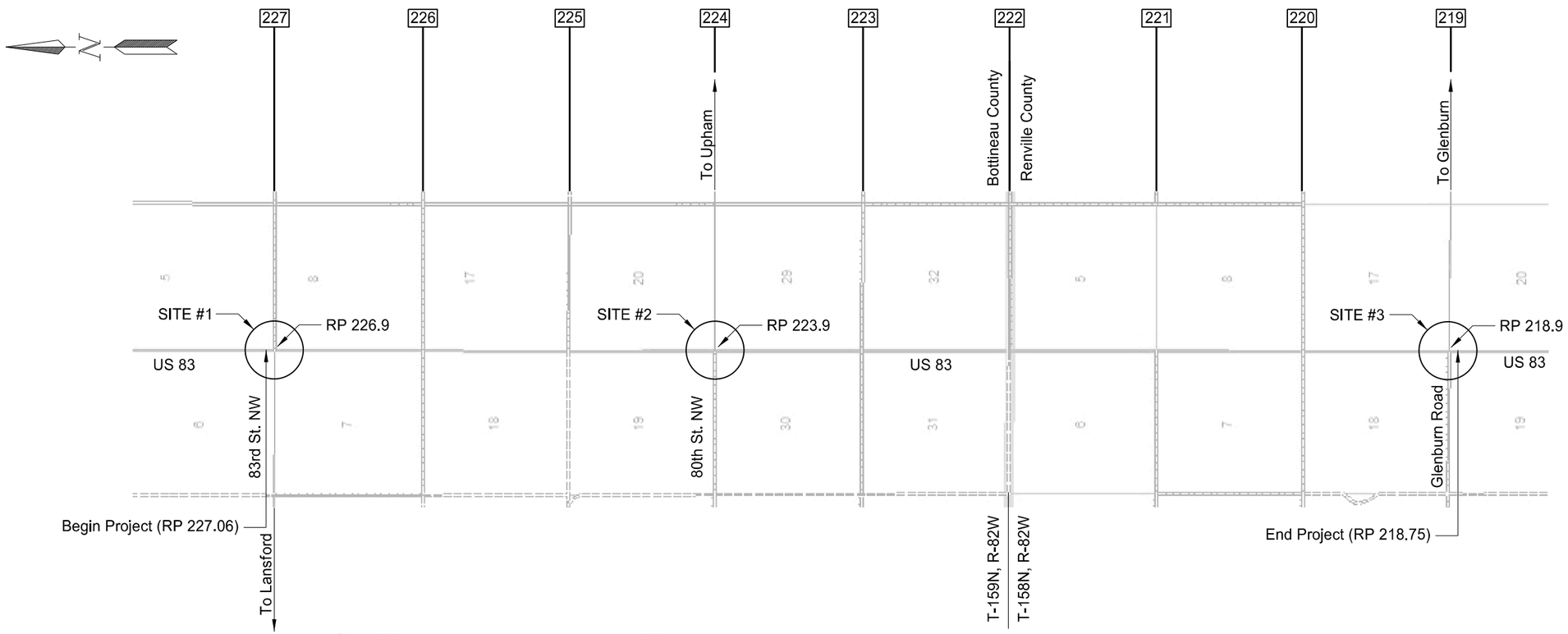

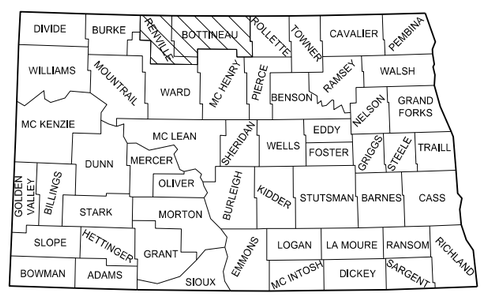

STATE COUNTY MAP

DESIGNERS

Aaron Murra

Joe Wagner

APPROVED DATE 8/24/15

Roger Weigel
OFFICE OF PROJECT DEVELOPMENT
ND DEPARTMENT OF TRANSPORTATION

I hereby certify that the attached plans were prepared by me or under my direct supervision and that I am a duly registered professional engineer under the laws of the state of ND.

APPROVED DATE 8/24/15

James Rath
Design Division

This document was originally issued and sealed by James Douglas Rath Registration Number PE- 4288, on 8/24/15 and the original document is stored at the North Dakota Department of Transportation

STATE	PROJECT NO.	SECTION NO.	SHEET NO.
ND	SHE-4-083(113)219	2	1

TABLE OF CONTENTS

INDEX OF DRAWINGS

SECTION	SHEET	DESCRIPTION
1	1	Title Sheet
2	1	Table of Contents
4	1	Scope of Work
6	1	Notes
6	2	Environmental Commitments
8	1 - 2	Quantities
10	1	Basis of Estimate
11	1 - 2	Data Tables
20	1 - 2	General Details, Super Elevation Tables, & Layouts
30	1 - 2	Typical Sections
40	1 - 4	Removals
50	1	Hydraulic Data
51	1	Allowable Pipe List
60	1 - 5	Plan & Profile
75	1 - 2	Wetlands, Mitigation and Environmental
76	1 - 4	Temporary Sediment and Erosion Control
77	1 - 4	Permanent Sediment and Erosion Control
82	1 - 2	Survey Data Layouts
100	1 - 2	Work Zone Traffic Control
110	1	Signing
200	1 - 13	Cross Sections

SPECIAL PROVISIONS

SP NO.	DESCRIPTION
SP 3(14)	Temporary Erosion and Sediment Best Management Practices

LIST OF STANDARD DRAWINGS

STANDARD NO.	DESCRIPTION
D-101-1, 2, 3	NDDOT Abbreviations
D-101-10	NDDOT Utility Company and Organization Abbreviations
D-101-20, 21	Line Styles
D-101-30, 31, 32	Symbols
D-203-6	Standard 90 Degree Flared Intersection
D-255-2	Erosion And Siltation Control - Erosion Control Blanket Installation
D-261-1	Erosion Control - Fiber Roll Placement Details
D-704-7	Breakaway Systems For Construction Zone Signs - Perforated Tube
D-704-8	Breakaway Systems For Construction Zone Signs - U-Channel Post
D-704-9	Construction Sign Details - Terminal And Guide Signs
D-704-10	Construction Sign Details - Regulatory Signs
D-704-11	Construction Sign Details - Warning Signs
D-704-12	Shoulder Closure Tapers
D-704-13	Barricade And Channelizing Device Details
D-704-14	Construction Sign Punching And Mounting Details
D-704-19	Road Closure And Lane Closure On A Two Way Road Layouts
D-704-20	Terminal And Seal Coat Sign Layouts
D-704-24	Shoulder Closures And Bridge Painting Layouts
D-704-26	Miscellaneous Sign Layouts
D-704-27	Traffic Control Plan For Moving Operations
D-704-50	Portable Sign Support Assembly
D-704-56	Mobile Operation (Grinding Shoulder Rumble Strips)
D-706-1	Bituminous Laboratory
D-708-6	Erosion And Siltation Controls - Median Or Ditch Inlet Protection
D-714-1	Reinforced Concrete Pipe Culverts And End Sections (Round Pipe)
D-714-22	Concrete Pipe Or Precast Concrete Box Culvert Ties
D-714-26	Transverse Mainline Pipe Excavation And Installation Detail For Pipes 4 Feet Or Less Below Top Of Subgrade
D-754-23	Perforated Tube Assembly Details
D-754-24, 25	Mounting Details Perforated Tube
D-754-27, 29, 32	Sign Punching, Stringer And Support Location Details Regulatory, Warning, And Guide Signs
D-754-82	Object Markers
D-754-83	Object Markers - Culverts
D-760-3	Rumble Strips Undivided Highways (Shoulders 4' Or Greater)
D-762-1	Pavement Marking Message Details
D-762-4	Pavement Marking

STATE	PROJECT NO.	SECTION NO.	SHEET NO.
ND	SHE-4-083(113)219	4	1

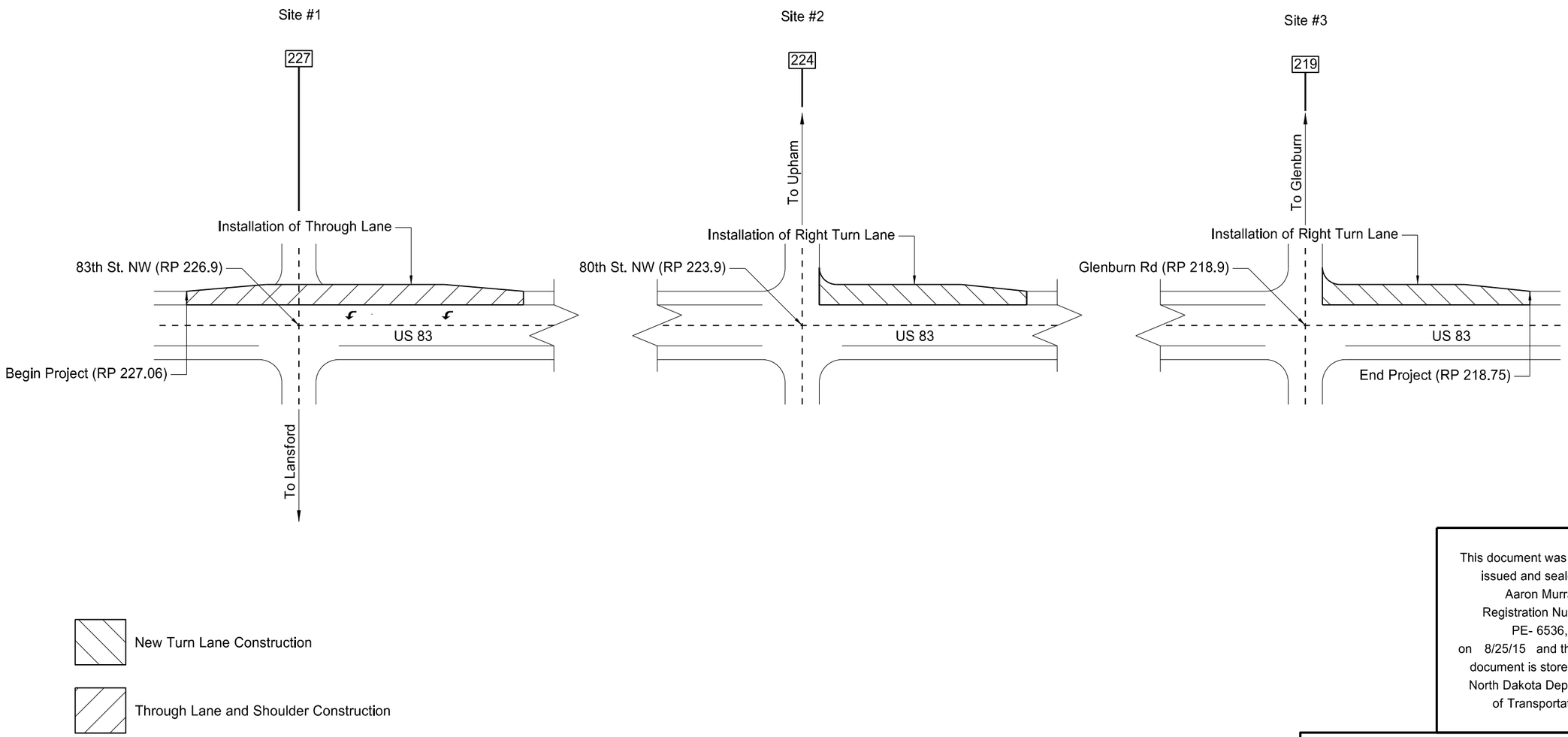

This document was originally issued and sealed by Aaron Murra Registration Number PE- 6536, on 8/25/15 and the original document is stored at the North Dakota Department of Transportation

Scope of Work

N of Minot between 83rd St NW and Glenburn Rd

NOTES

GENERAL NOTES

100-P01 WORK SCHEDULE: Organize a weekly meeting to coordinate the efforts between subcontractors, utilities, local authorities, and others

100-P02 SURVEY OFFICE LOCATION: An office location was established for the centerlines of the roadway (OCL_218_9, OCL _223_9, and OCL_226_9). The plans have been developed using the office location. Unless otherwise stated, stationing for US 83 will be based on the OCL_218_9, OCL_223_9, and OCL_226_9 alignments.

200-010 SHRINKAGE: 25 percent additional volume is included for shrinkage in earth embankment.

202-P01 PAVEMENT REMOVAL: All bituminous pavements and aggregate paid for as removal have been deducted from the excavation quantity.

704-P01 TRAFFIC CONTROL DEVICES: The Traffic Control Devices List has been developed using the plan sheets and the following layouts on the standard drawings for traffic control:

D-704-7, 8, 9, 10, 11, 12, 13, and 14 as applicable
D-704-19 Type F – Road Closure and Lane Closure on a Two Way Road Layouts
D-704-20 Type G – Terminal Sign Layout
D-704-24 Type R – Shoulder Closures and Bridge Painting Layouts

704-255 TRAFFIC CONTROL FOR SHOULDER DROP-OFF: If the shoulder and adjacent driving lane are not even at the end of the day, the following criteria will apply:

Place the following sign assembly at the locations listed below.

Sign Assembly: Sign No. W8-9a-48 “Shoulder Drop Off” and supplemental plate Sign No. W20-52-54 to identify the distance

Location:

- In advance of the drop off;
- Spaced at each mile from the advance sign; and
- At major intersections (CMC routes, state and US highways, and Interstate Ramps).

If the difference in elevation between the shoulder and the driving lane is 2” or greater, construct a slough on the driving lane that is 4:1 or flatter.

If the difference in elevation between the shoulder and riving lane is less than 2”, no slough is required.

Sign assemblies will be measured and paid for according to Section 704 “Temporary Traffic Control”.

This document was originally issued and sealed by Aaron Murra, Registration Number PE-6536, on 8/17/15 and the original document is stored at the North Dakota Department of Transportation.

ENVIRONMENTAL COMMITMENTS

EC-1: Unavoidable impacts to wetlands will be mitigated onsite, adjacent to the project, or at an NDDOT approved mitigation site or bank.

ACTION TAKEN/REQUIRED: Approximately .088 artificial/non-jurisdictional acres of wetlands will be impacted permanently. No mitigation will be required.

Wetland Impact Table																				
							Wetland Impacts (acres)		USFWS Easement Impacts		Wetland Mitigation									
											Mitigation Required			Bank		Onsite				
Wetland Number	Location	Cowardin Class.	Wetland Type	Wetland Size Ac.	Wetland Feature	USACE Jurisdictional Wetlands*	Temp. Ac.	Perm. Ac.	Temp.	Perm.	EO 11990	USACE	USFWS	Location	Acres	Mitigation Location; Ratio	Acres	Constructed Site #	Constructed Acres
1	Sec.29, T159N, R82W	PEMCx	Ditch	0.53	Artificial	N/A	0.000	0.000	0.000	0.000	N	N	N						
2	Sec. 6, T146N, R95W	PEMCx	Ditch	0.21	Artificial	N/A	0.000	0.012	0.000	0.000	N	N	N						
3	Sec.6, T146N, R95W	PEMCx	Ditch	0.50	Artificial	N/A	0.000	0.076	0.000	0.000	N	N	N						
4	Sec.30, T146N, R95W	PEMCx	Ditch	0.13	Artificial	N/A	0.000	0.000	0.000	0.000	N	N	N						
5	Sec.30, T146N, R95W	PEMCx	Ditch	0.07	Artificial	N/A	0.000	0.000	0.000	0.000	N	N	N						
6	Sec.30, T146N, R95W	PEMCx	Ditch	0.06	Artificial	N/A	0.000	0.000	0.000	0.000	N	N	N						
7	Sec.19, T146N, R95W	PEMCx	Ditch	0.09	Artificial	N/A	0.000	0.000	0.000	0.000	N	N	N						
			Totals	1.59			0.000	0.088	0.000	0.000					0.00		0.00		0.00

*A wetland jurisdictional Determination was issued by the USACE on 11/12/2012; NWO-2012-2637-BIS
No permit pursuant to Section 404 of the Clean Water Act is required from the Corps.

Summary Impact Table			
Total Permanent Impact Summary		Temporary Impacts and Additional Information	
Wetland Type	Total (Acres)	Wetland Type	Total (Acres/Lf)
Natural /JD	0.00	Temporary JD	0.00
Natural/Non-JD	0.00	Non-JD Temporary	0.00
Artificial /JD	0.00	Permanent JD 0.10	0.00
Artificial /Non-JD	0.09	Permanent OW	0.00
Total	0.09	Temporary OW	0.00

ESTIMATE OF QUANTITIES

STATE	PROJECT NO.	SECTION NO.	SHEET NO.
ND	SHE-4-083(113)219	8	1

SPEC	CODE	ITEM DESCRIPTION	UNIT	MAINLINE	TOTAL
103	0100	CONTRACT BOND	L SUM	1	1
202	0136	REMOVAL OF PAVEMENT	TON	3,158	3,158
203	0101	COMMON EXCAVATION-TYPE A	CY	844	844
203	0109	TOPSOIL	CY	1,993	1,993
203	0140	BORROW-EXCAVATION	CY	4,774	4,774
216	0100	WATER	M GAL	159	159
251	0200	SEEDING CLASS II	ACRE	2.803	2.803
251	2000	TEMPORARY COVER CROP	ACRE	2.803	2.803
253	0101	STRAW MULCH	ACRE	5.606	5.606
255	0101	ECB TYPE 1	SY	42	42
261	0112	FIBER ROLLS 12IN	LF	1,450	1,450
261	0113	REMOVE FIBER ROLLS 12IN	LF	1,450	1,450
302	0120	AGGREGATE BASE COURSE CL 5	TON	6,948	6,948
401	0050	TACK COAT	GAL	394	394
401	0060	PRIME COAT	GAL	2,867	2,867
430	0043	SUPERPAVE FAA 43	TON	2,106	2,106
430	1000	CORED SAMPLE	EA	9	9
430	5828	PG 58-28 ASPHALT CEMENT	TON	126	126
702	0100	MOBILIZATION	L SUM	1	1
704	0100	FLAGGING	MHR	200	200
704	1000	TRAFFIC CONTROL SIGNS	UNIT	1,869	1,869
704	1060	DELINEATOR DRUMS	EA	73	73
704	1067	TUBULAR MARKERS	EA	64	64
704	1500	OBLITERATION OF PAVEMENT MARKING	SF	920	920
706	0550	BITUMINOUS LABORATORY	EA	1	1
706	0600	CONTRACTOR'S LABORATORY	EA	1	1
714	0615	PIPE CONC REINF 24IN CL III	LF	16	16
714	9660	REMOVE & RELAY END SECTION-ALL TYPE & SIZES	EA	2	2
754	0592	RESET SIGN PANEL	EA	4	4
754	0593	RESET SIGN SUPPORT	EA	7	7
754	0805	OBJECT MARKERS - CULVERTS	EA	4	4
760	0005	RUMBLE STRIPS - ASPHALT SHOULDER	MILE	0.45	0.45
762	0103	PVMT MK PAINTED-MESSAGE	SF	144	144

ESTIMATE OF QUANTITIES

STATE	PROJECT NO.	SECTION NO.	SHEET NO.
ND	SHE-4-083(113)219	8	2

SPEC	CODE	ITEM DESCRIPTION	UNIT	MAINLINE	TOTAL
762	1104	PVMT MK PAINTED 4IN LINE	LF	12,652	12,652
762	1108	PVMT MK PAINTED 8IN LINE	LF	1,781	1,781

STATE	PROJECT NO.	SECTION NO.	SHEET NO.
ND	SHE-4-083(113)219	10	1

Spec	Code	Description	Qty	Unit
216	100	Water	159	MGAL
All Sites		Aggregate: 20 Gal/Ton	139	MGAL
		Dust: 25 MGAL/MI	20	MGAL
302	120	Aggregate Base Course Cl 5	6948	TON
Site #1: 83rd St NW		1.875 TON/CY	4573	TON
Site #2: 80th St NW			1186	TON
Site #3: Glenburn Rd			1189	TON
401	50	Tack Coat	394	GAL
Site #1: 83rd St NW		0.05 GAL/SY	240	GAL
Site #2: 80th St NW			77	GAL
Site #3: Glenburn Rd			77	GAL
401	60	Prime Coat	2867	GAL
Site #1: 83rd St NW		.35 GAL/SY	1752	GAL
Site #2: 80th St NW			557	GAL
Site #3: Glenburn Rd			558	GAL
430	43	Superpave FAA 43	2106	TON
Site #1: 83rd St NW		2 TON/CY	1391	TON
Site #2: 80th St NW			357	TON
Site #3: Glenburn Rd			358	TON
430	1000	Cored Samples	9	EA
All Sites		For density	8	EA
Site #1: 83rd St NW		For thickness	1	EA
430	5828	PG 58-28 Asphalt Cement	126	TON
All Sites		6.0% Superpave FAA 43	126	TON
754	805	Object Markers - Culvert	4	EA
Site #1: 83rd St NW			2	EA
Site #2: 80th St NW			2	EA
760	5	Rumble Strips - Asphalt Shoulder	0.45	MILE
Site #1: 83rd St NW		1 Strip x .45 mile	0.45	MILE

This document was originally issued and sealed by Aaron Murra Registration Number PE- 6536, on 8/25/15 and the original document is stored at the North Dakota Department of Transportation

Basis of Estimate

N of Minot between 83rd St NW and Glenburn Rd

Earthwork Summary						
Location	Common Excavation Type A (Pay Item)	Earthwork**	Borrow Excavation (Pay Item)	Topsoil* (Pay Item)	Toposil Required	Topsoil Excess (To Be Spread Evenly)
	CY	CY	CY	CY	CY	CY
	A	B	C	D	E	F=D-E
Site #1 (RP 226.9)	642	3855	3213	1291	993	298
Site #2 (RP 223.9)	121	976	855	365	301	64
Site #3 (RP 218.9)	81	787	706	337	281	56
	844	5618	4774	1993	1575	418

* Removal is based on a 6" depth

** 25% volume was added to earthwork volumes to allow for shrinkage.

This document was originally issued and sealed by Aaron Murra Registration Number PE- 6536, on 8/25/15 and the original document is stored at the North Dakota Department of Transportation

Earthwork Summary

N of Minot between 83rd St NW and Glenburn Rd

STATE	PROJECT NO.	SECTION NO.	SHEET NO.
ND	SHE-4-083(113)219	11	2

Site #1 RP 226.9				
Station	Common Excavation Type A	Earthwork	Topsoil* (Pay Item)	Topsoil Required
	CY	CY	CY	CY
520+10	0	0	0	0
521+00	35	0	17	19
521+90	30	21	26	25
522+80	26	58	42	37
523+70	25	75	43	36
524+60	25	90	45	35
525+50	25	130	48	36
526+40	24	164	51	36
527+76	34	296	81	53
528+00	5	60	13	9
528+82	17	226	39	31
529+00	5	45	10	7
530+00	27	214	59	40
531+00	26	241	60	41
532+00	23	251	61	41
533+00	22	251	62	43
534+00	24	239	63	43
535+00	23	241	63	44
536+00	25	250	63	44
537+00	25	223	61	42
537+16	4	33	9	6
538+00	18	170	49	35
539+00	19	185	56	43
540+00	21	145	53	42
541+00	25	87	48	40
542+00	26	45	44	40
543+00	27	36	42	41
543+35	10	14	15	15
544+96	46	65	68	69
Total	642	3855	1291	993

Site #2 RP 223.9				
Station	Common Excavation Type A	Earthwork	Topsoil* (Pay Item)	Topsoil Required
	CY	CY	CY	CY
687+05	0	0	0	0
687+50	7	91	21	19
688+00	8	85	25	21
689+00	14	156	53	42
690+00	15	159	54	42
691+00	13	155	54	43
692+00	12	144	53	43
693+00	17	119	51	40
693+08	1	9	4	3
694+00	18	57	40	35
694+28	6	1	6	7
694+80	10	0	4	6
Total	121	976	365	301

Site #3 RP 218.9				
Station	Common Excavation Type A	Earthwork	Topsoil* (Pay Item)	Topsoil Required
	CY	CY	CY	CY
951+26	0	0	0	0
952+00	7	28	25	26
953+00	10	83	41	36
954+00	11	131	49	38
955+00	9	144	52	41
956+00	10	155	54	42
957+00	11	144	52	41
957+32	3	38	16	12
958+00	7	54	31	26
958+52	6	10	12	12
959+00	6	0	4	6
959+12	1	0	1	1
Total	81	787	337	281

* Removal is based on a 6" depth

This document was originally issued and sealed by Aaron Murra Registration Number PE- 6536, on 8/25/15 and the original document is stored at the North Dakota Department of Transportation

Earthwork Tabulation

N of Minot between 83rd St NW and Glenburn Rd

STATE	PROJECT NO.	SECTION NO.	SHEET NO.
ND	SHE-4-083(113)219	20	1

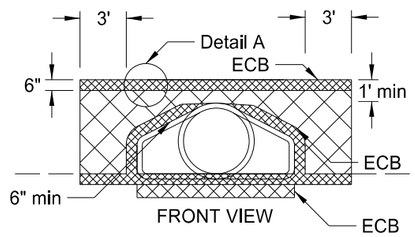

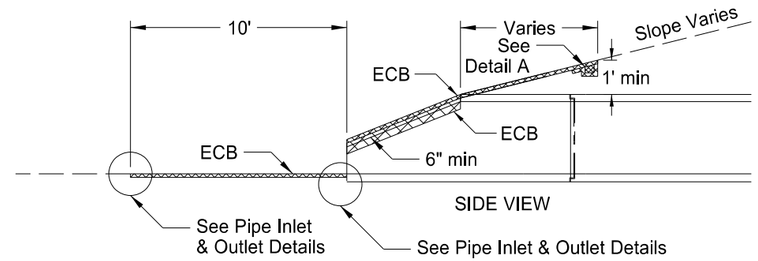

Erosion Control Blanket (ECB)									
Location to be Protected		Culvert Type Appr / CL	Pipe Dia.	No.	Unit Quantity	Total Quantity			
						Type 1	Type 2	Type 3	Type 4
Site Number	Ref Point		(IN)		(SY)	(SY)	(SY)	(SY)	(SY)
1	226.9	CL	24	1	21	21	-	-	-
2	223.9	CL	24	1	21	21	-	-	-
Total (SY)						42	0	0	0

CENTERLINE CULVERTS				
Dia.	X	Y	Surface Area to be Protected	ECB
(IN)	(FT)	(FT)	(SF)	(SY)
24	10.5	17.6	184.8	21
Note: Quantities based on 4:1 slope.				

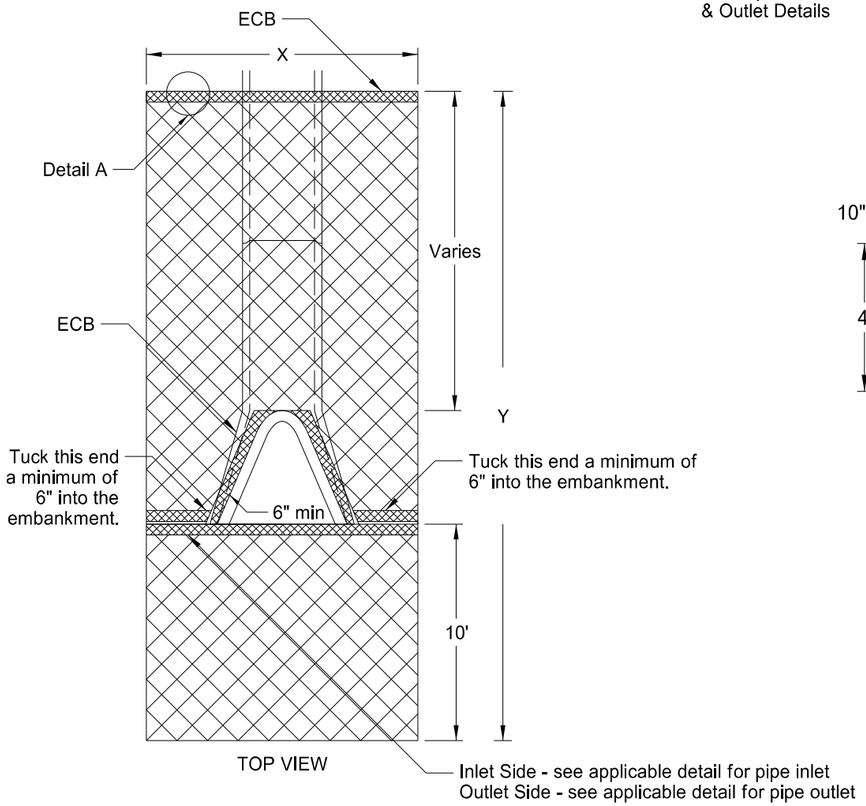

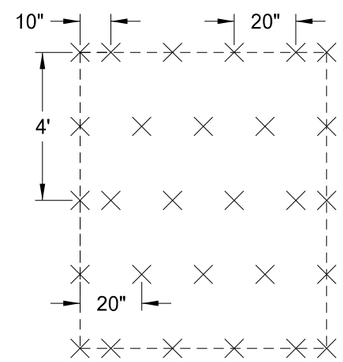

NOTE: Tuck the ECB a minimum of 6" into the embankment (against the flared end section) around the opening of the flared end section

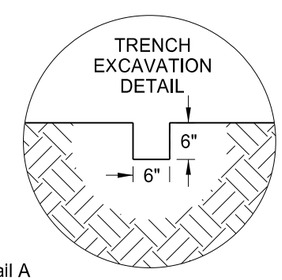

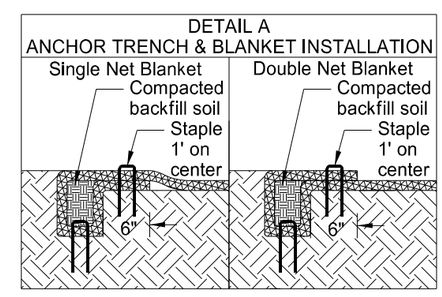

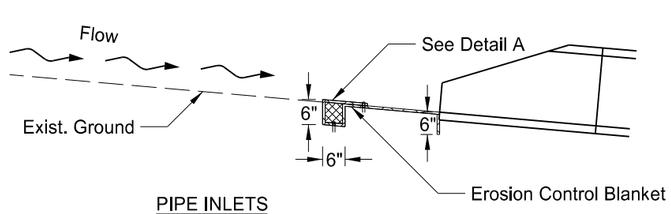

PIPE INLETS

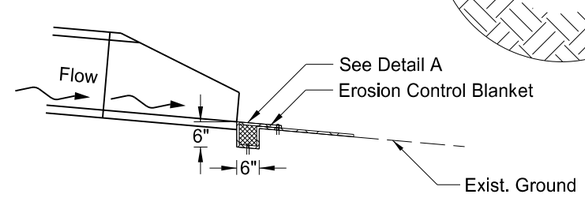

PIPE OUTLETS

This document was originally issued and sealed by Aaron Murra Registration Number PE- 6536, on 8/25/15 and the original document is stored at the North Dakota Department of Transportation

Erosion Control at Culvert Flared End Sections

N of Minot between 83rd St NW and Glenburn Rd

STATE	PROJECT NO.	SECTION NO.	SHEET NO.
ND	SHE-4-083(113)219	20	2

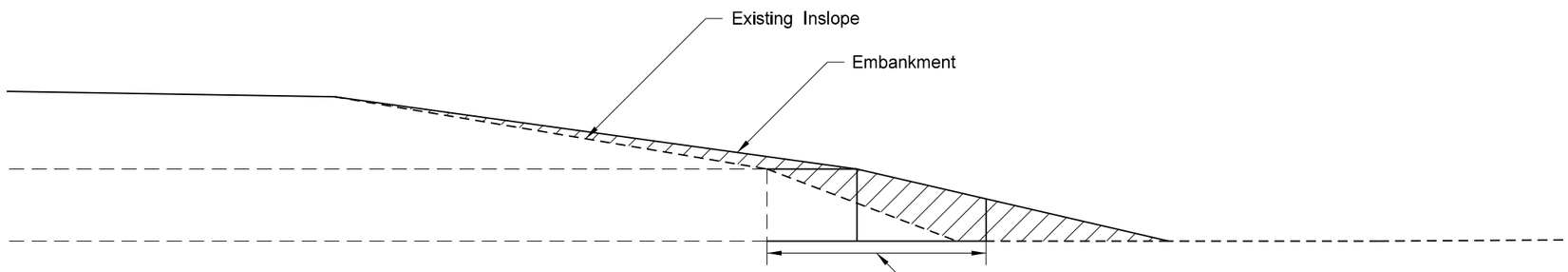

Section

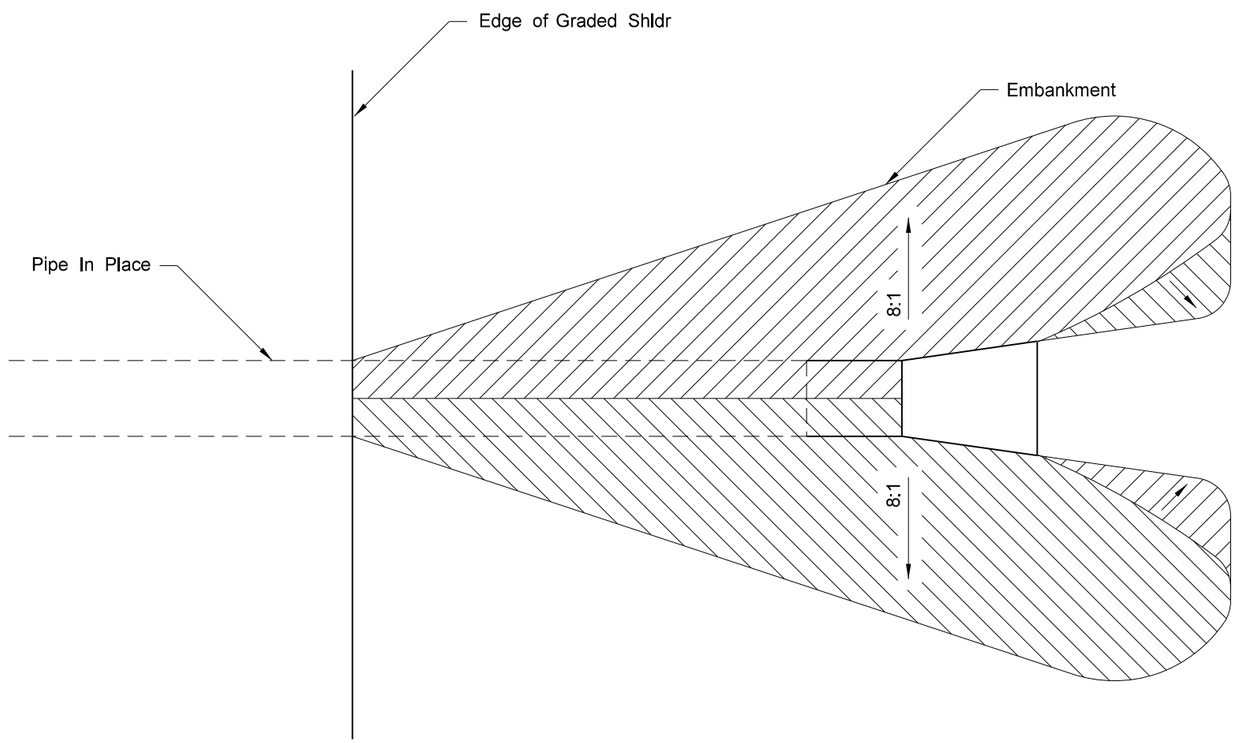

Plan View

This document was originally issued and sealed by Aaron Murra Registration Number PE- 6536, on 8/14/15 and the original document is stored at the North Dakota Department of Transportation

Additional Embankment at Centerline Pipe Extensions

N of Minot between 83rd St NW and Glenburn Rd

STATE	PROJECT NO.	SECTION NO.	SHEET NO.
ND	SHE-4-083(113)219	30	1

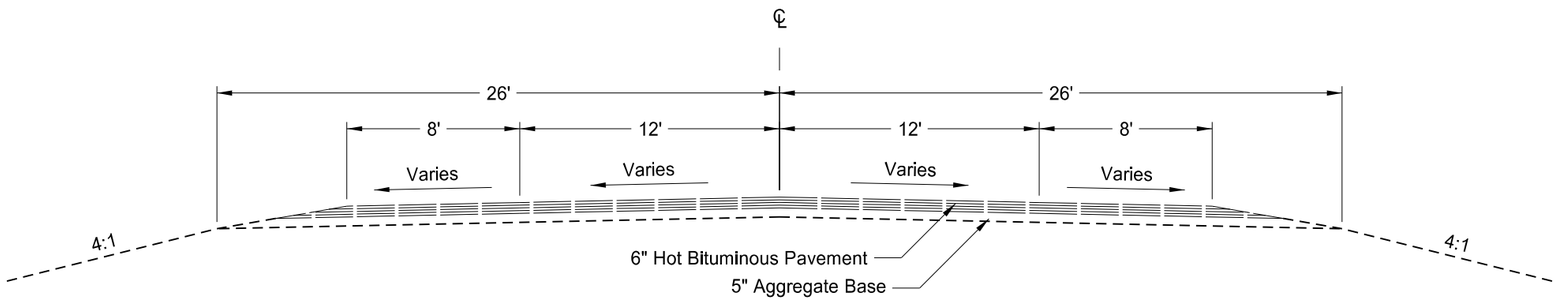

Exisiting Typical
RP 218.75 - 227.06

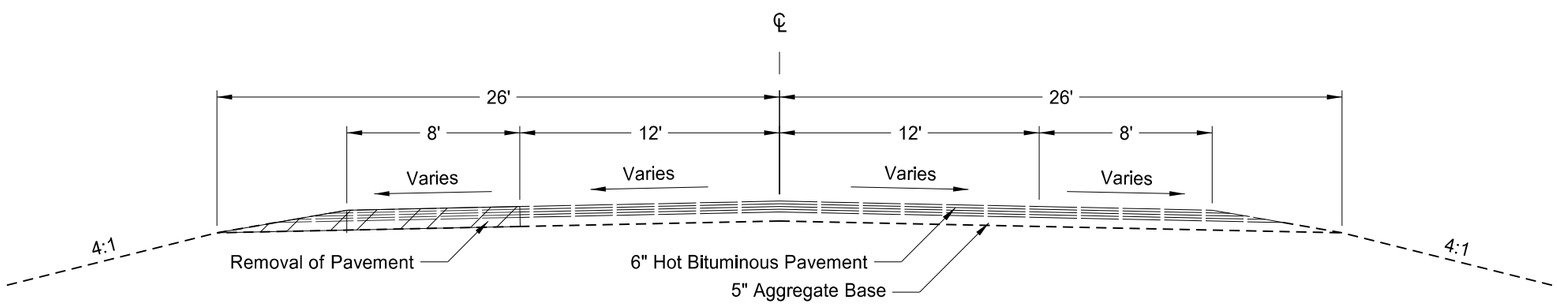

Removal of Pavement

This document was originally issued and sealed by Aaron Murra Registration Number PE- 6536, on 8/14/15 and the original document is stored at the North Dakota Department of Transportation

Existing and Removal Typical Sections

N of Minot between 83rd St NW and Glenburn Rd

STATE	PROJECT NO.	SECTION NO.	SHEET NO.
ND	SHE-4-083(113)219	30	2

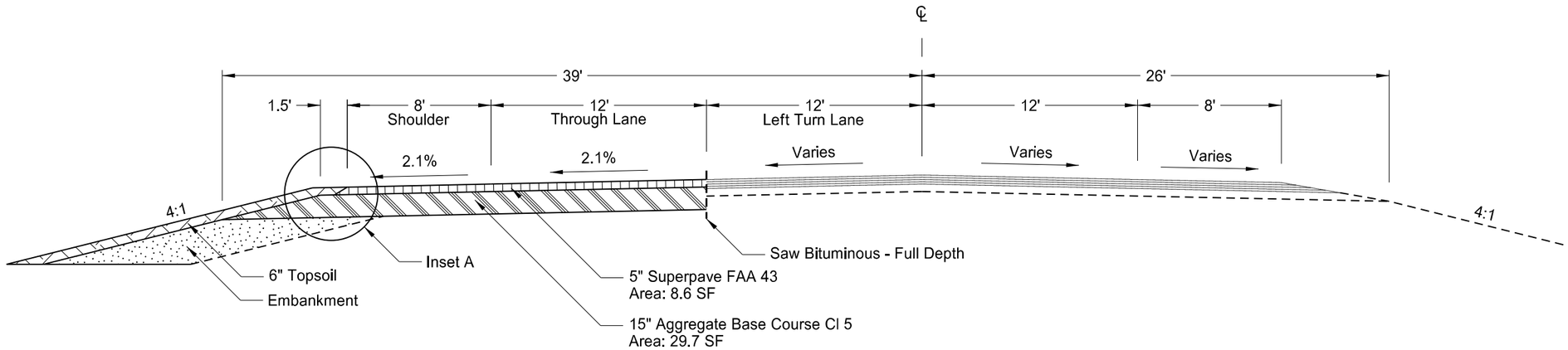

Proposed Left Turn Lane
RP 226.9

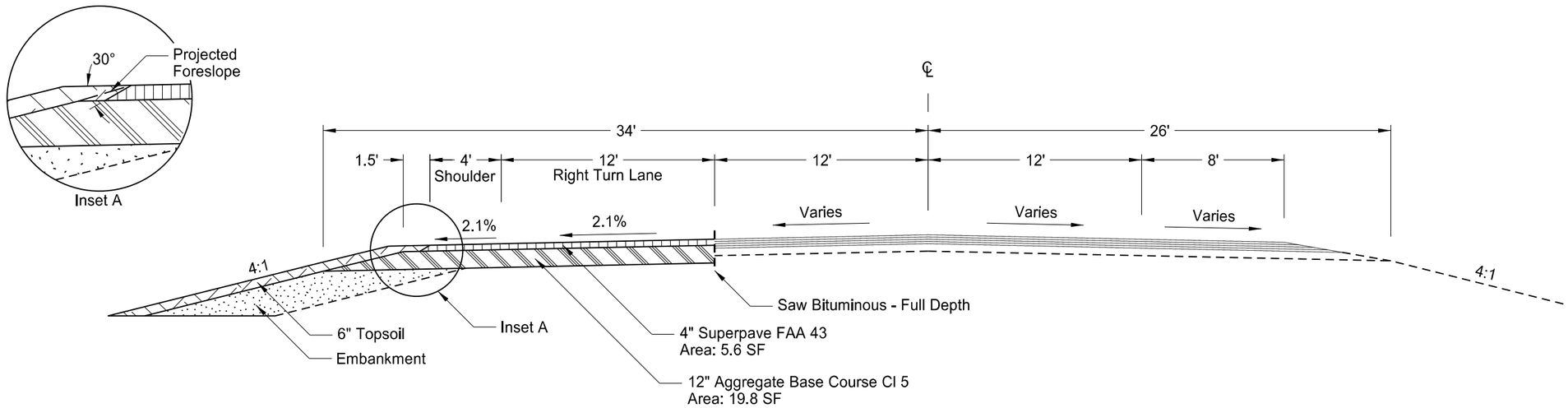

Proposed Right Turn Lane
RP 218.9 and RP 223.9

This document was originally issued and sealed by Aaron Murra Registration Number PE- 6536, on 8/25/15 and the original document is stored at the North Dakota Department of Transportation

Proposed Typical Sections

N of Minot between 83rd St NW and Glenburn Rd

STATE	PROJECT NO.	SECTION NO.	SHEET NO.
ND	SHE-4-083(113)219	40	1

Spec	Code	Description	Quantity
202	136	Removal of Pavement	759 TON

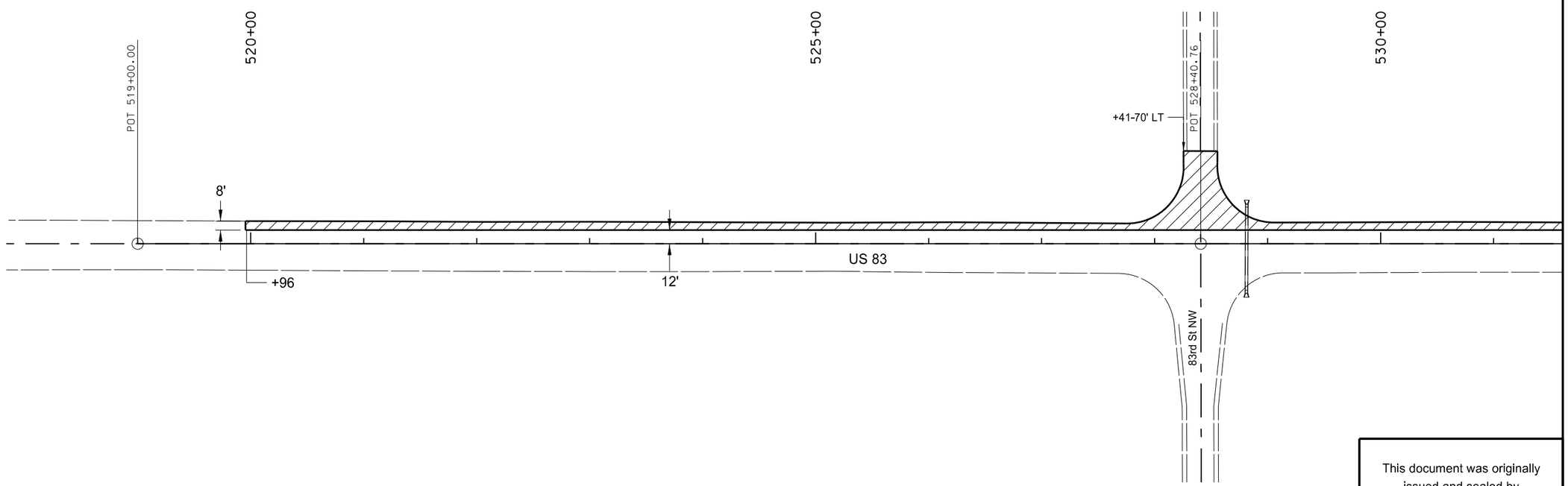

Removal of Pavement

This document was originally issued and sealed by Aaron Murra Registration Number PE- 6536, on 8/14/15 and the original document is stored at the North Dakota Department of Transportation

Removal Layout

Site #1 (RP 226.9)
Sta 519+96 - Sta 531+00

N of Minot between 83rd St NW and Glenburn Rd

STATE	PROJECT NO.	SECTION NO.	SHEET NO.
ND	SHE-4-083(113)219	40	2

Spec	Code	Description	Quantity
202	136	Removal of Pavement	1049 TON

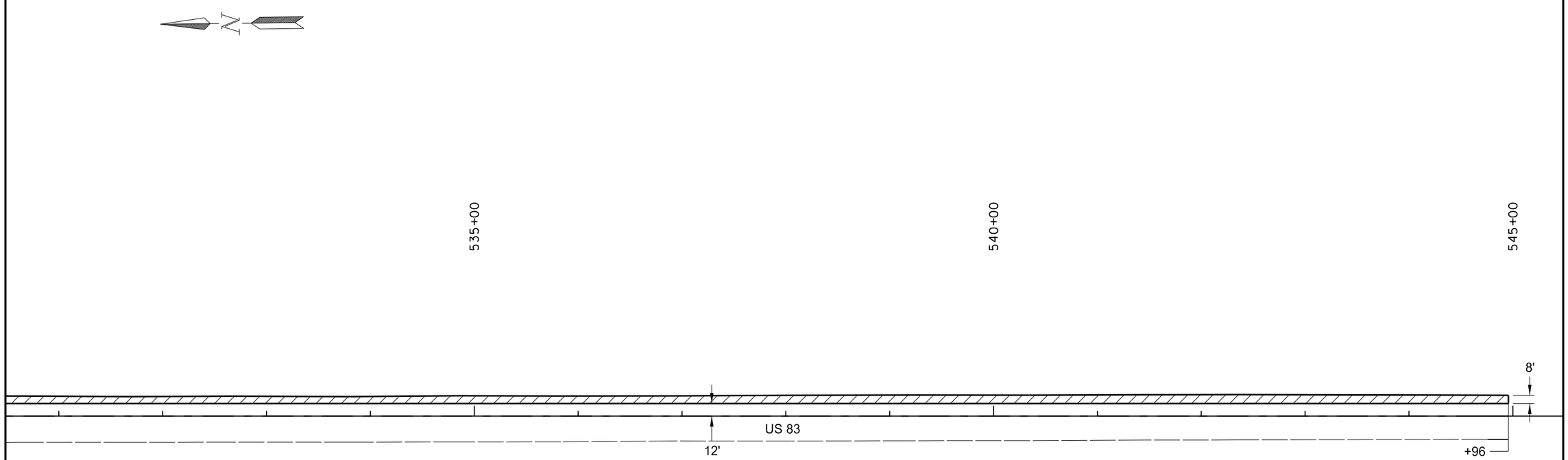

Removal of Pavement

This document was originally issued and sealed by Aaron Murra Registration Number PE- 6536, on 8/14/15 and the original document is stored at the North Dakota Department of Transportation

Removal Layout

Site #1 (RP 226.9)
Sta 531+00 - Sta 544+96

N of Minot between 83rd St NW and Glenburn Rd

STATE	PROJECT NO.	SECTION NO.	SHEET NO.
ND	SHE-4-083(113)219	40	3

Spec	Code	Description	Quantity
202	136	Removal of Pavement	644 TON

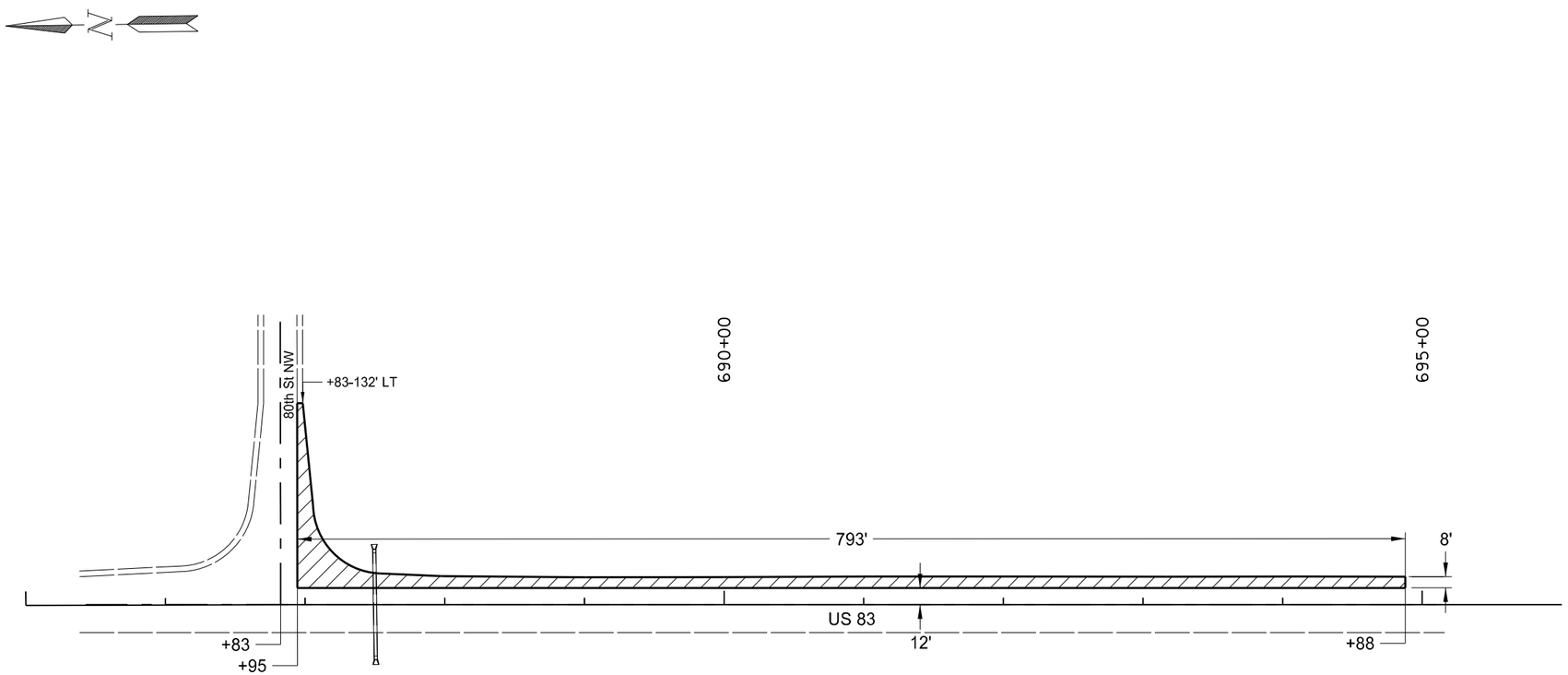

Removal of Pavement

This document was originally issued and sealed by Aaron Murra Registration Number PE- 6536, on 8/14/15 and the original document is stored at the North Dakota Department of Transportation

Removal Layout

Site #2 (RP 223.9)
Sta 686+95 - Sta 694+88

N of Minot between 83rd St NW and Glenburn Rd

STATE	PROJECT NO.	SECTION NO.	SHEET NO.
ND	SHE-4-083(113)219	40	4

Spec	Code	Description	Quantity
202	136	Removal of Pavement	706 TON

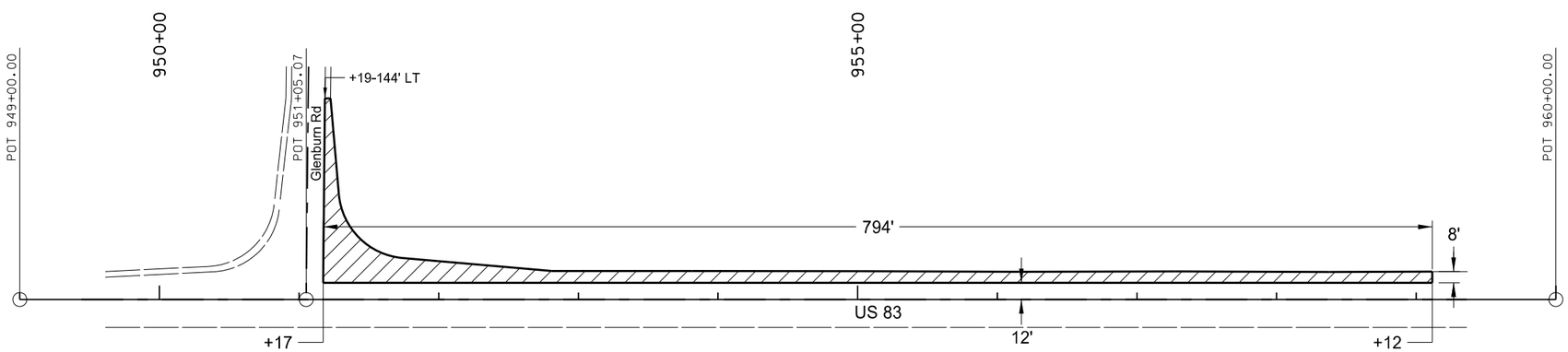

Removal of Pavement

This document was originally issued and sealed by Aaron Murra Registration Number PE- 6536, on 8/14/15 and the original document is stored at the North Dakota Department of Transportation

Removal Layout

Site #3 (RP 218.9)
Sta 951+17 - Sta 959+12

N of Minot between 83rd St NW and Glenburn Rd

HYDRAULIC DATA FOR SHE-4-083(113)219 (A)

STATION	EXISTING PIPE	PROPOSED PIPE SIZE	DRAINAGE AREA (ACRES)	25-YEAR DATA				100-YEAR DATA	
				DESIGN DISCHARGE (CFS)	DESIGN HEADWATER (FT)	DESIGN VELOCITY (FPS)	DESIGN STAGE (NAVD 88)	100-YEAR DISCHARGE (CFS)	100-YEAR STAGE (NAVD 88)
528+82	24"	24"	37.0	14.7	2.32	6.37	1571.02	25.3	1572.74
687+50	24"	24"	6.6	3.8	1.04	4.05	1581.64	6.7	1582.02

(A) Hydraulic data provided is for smooth-walled (Manning's n=0.012) type conduits.

This document was originally issued and sealed by Brad Pfeifer Registration Number PE- 5247, on 08/14/14 and the original document is stored at the North Dakota Department of Transportation

Hydraulic Data

N of Minot between 83rd St NW and Glenburn Rd

STATE	PROJECT NO.	SECTION NO.	SHEET NO.
ND	SHE-4-083(113)219	51	1

Location	Begin Station*	Begin Offset	End Station*	End Offset	Length	Pipe Pay Size	Allowable Material	Required Diameter	Minimum Thickness	End Sections	
										Begin	End
	Sta	LF	Sta	LF	LF	In		In	In	EA	EA
Site #1 RP 226.9	528+82	33	528+82	43	10	24	Reinforced Concrete Pipe - Class III (barrel length = 10 LF)	24	3	N	Y**
Site #2 RP 223.9	687+50	36	687+50	42	6	24	Reinforced Concrete Pipe - Class III (barrel length = 6 LF)	24	3	N	Y**

*Offset is measured from CL of roadway

**Paid for as Remove & Relay End Section - All Type & Sizes

This document was originally issued and sealed by Aaron Murra Registration Number PE- 6536, on 8/14/15 and the original document is stored at the North Dakota Department of Transportation

Allowable Pipe List

N of Minot between 83rd St NW and Glenburn Rd

STATE	PROJECT NO.	SECTION NO.	SHEET NO.
ND	SHE-4-083(113)219	60	1

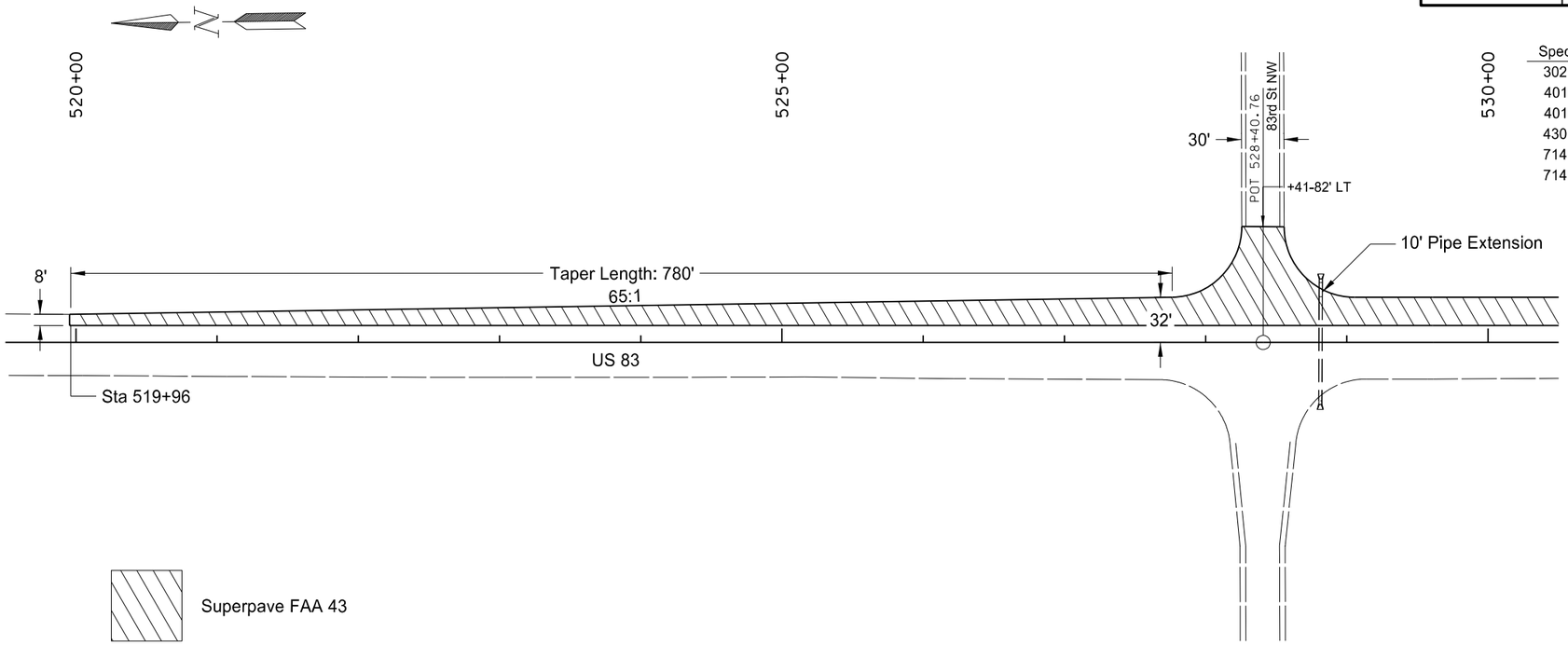

Spec	Code	Description	Quantity
302	120	Aggregate Base Course Cl 5	1896 TON
401	50	Tack Coat	100 GAL
401	60	Prime Coat	728 GAL
430	43	Superpave FAA 43	578 TON
714	615	Pipe Conc Reinf 24IN CL III	10 LF
714	9660	Remove & Relay End Section-All Type	1 EA

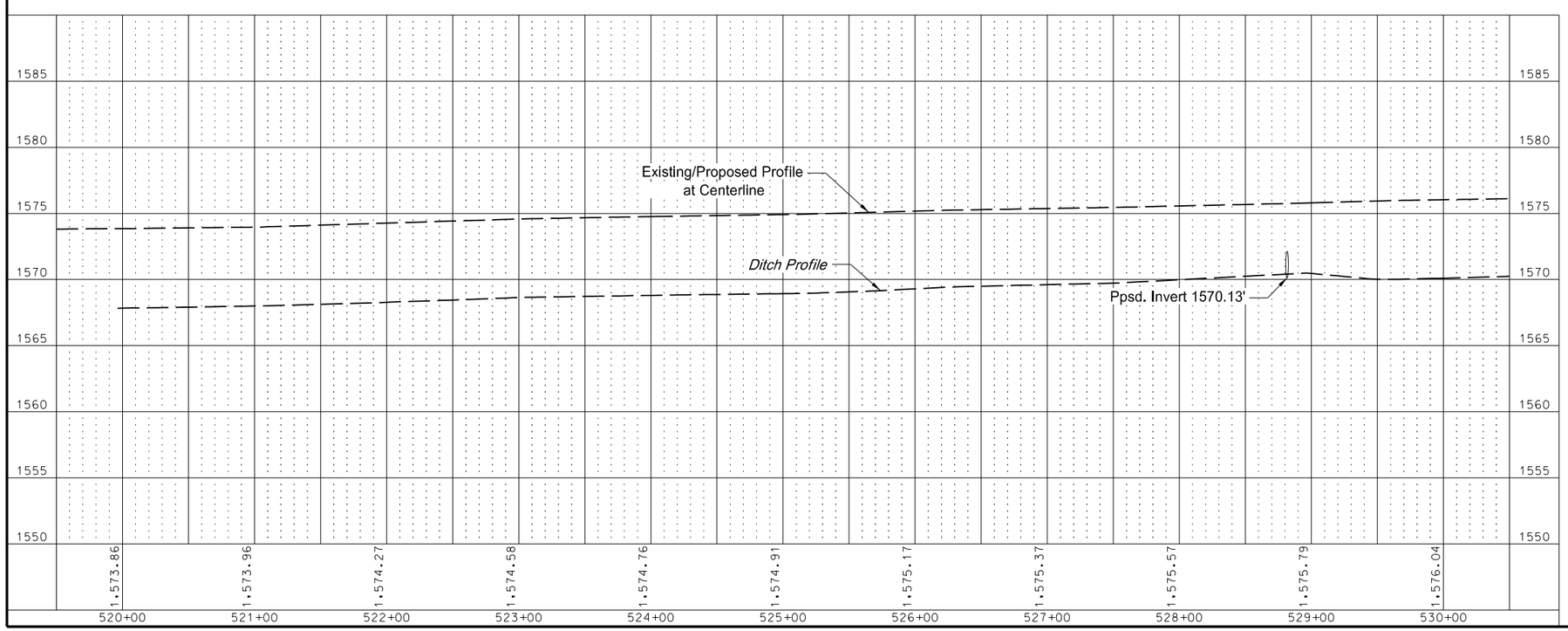

This document was originally issued and sealed by Aaron Murra Registration Number PE- 6536, on 8/14/15 and the original document is stored at the North Dakota Department of Transportation

Plan & Profile

Site #1 (RP 226.9)
Sta 519+96 - Sta 530+00

N of Minot between 83rd St NW and Glenburn Rd

STATE	PROJECT NO.	SECTION NO.	SHEET NO.
ND	SHE-4-083(113)219	60	2

530+00 535+00 540+00

Spec	Code	Description	Quantity
302	120	Aggregate Base Course Cl 5	2008 TON
401	50	Tack Coat	108 GAL
401	60	Prime Coat	782 GAL
430	43	Superpave FAA 43	621 TON

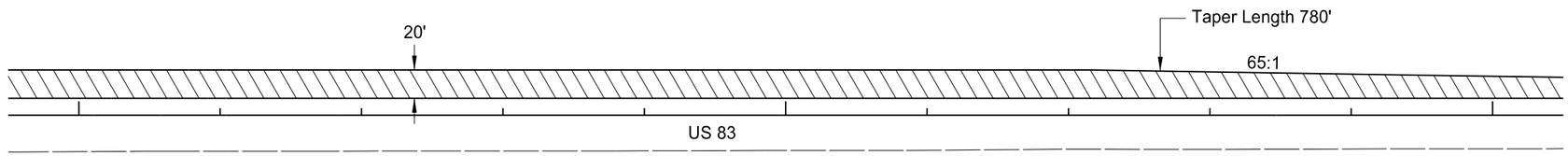

Superpave FAA 43

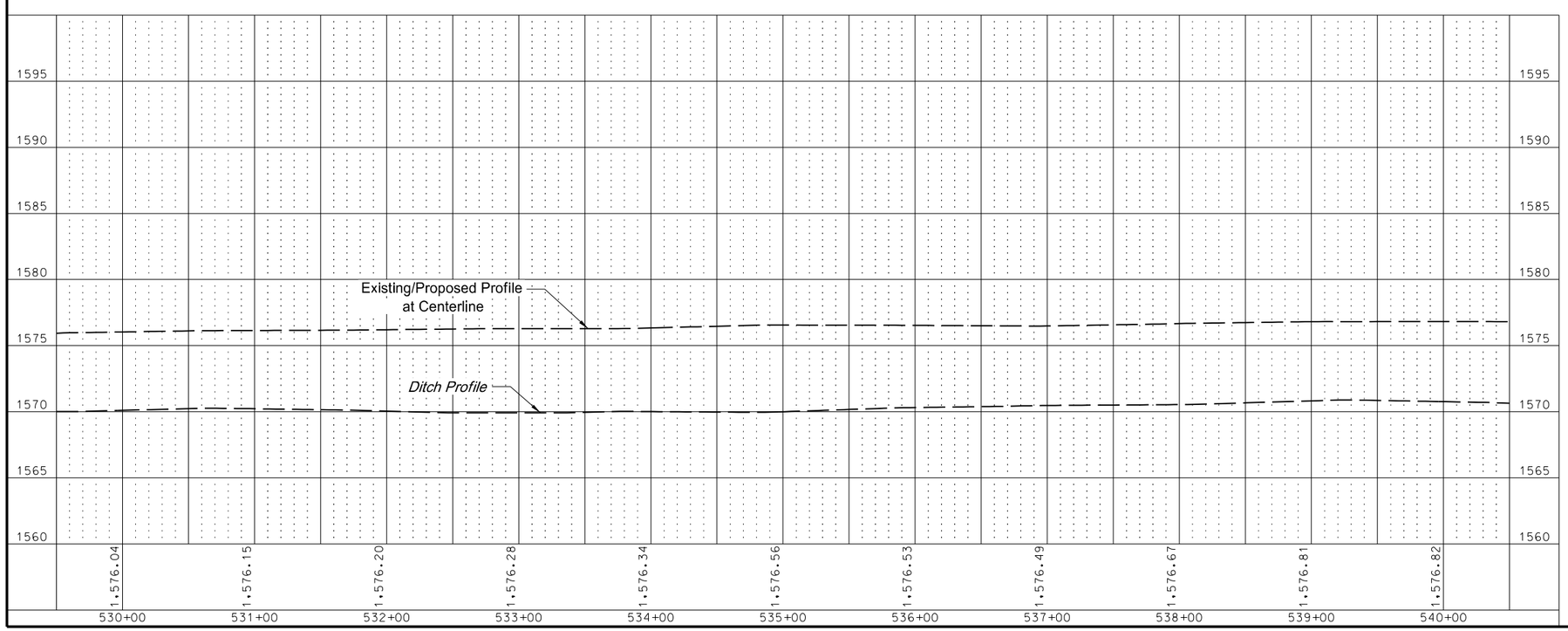

This document was originally issued and sealed by Aaron Murra Registration Number PE- 6536, on 8/14/15 and the original document is stored at the North Dakota Department of Transportation

Plan & Profile

Site #1 (RP 226.9)
Sta 530+00 - 540+00

N of Minot between 83rd St NW and Glenburn Rd

STATE	PROJECT NO.	SECTION NO.	SHEET NO.
ND	SHE-4-083(113)219	60	3

Spec	Code	Description	Quantity
302	120	Aggregate Base Course Cl 5	669 TON
401	50	Tack Coat	32 GAL
401	60	Prime Coat	242 GAL
430	43	Superpave FAA 43	192 TON

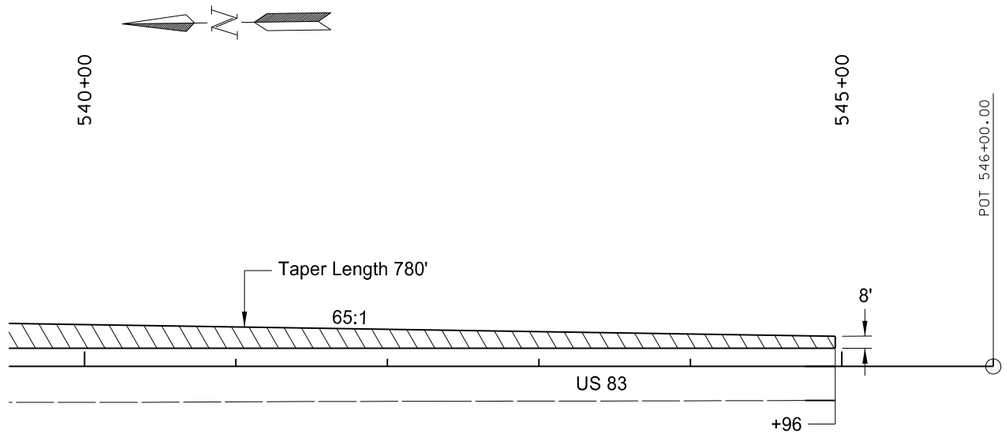

Superpave FAA 43

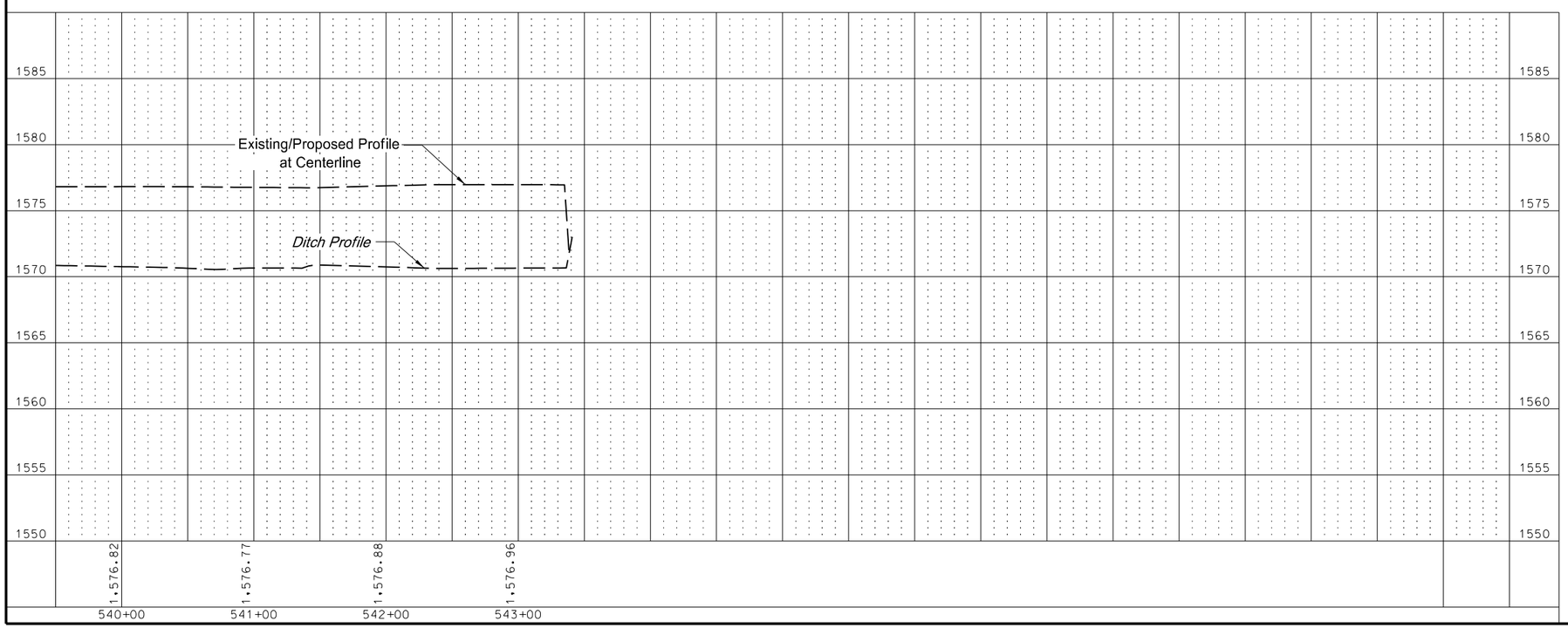

This document was originally issued and sealed by Aaron Murra Registration Number PE- 6536, on 8/14/15 and the original document is stored at the North Dakota Department of Transportation

Plan & Profile

Site #1 (RP 226.9)
Sta 540+00 - Sta 544+96

N of Minot between 83rd St NW and Glenburn Rd

STATE	PROJECT NO.	SECTION NO.	SHEET NO.
ND	SHE-4-083(113)219	60	4

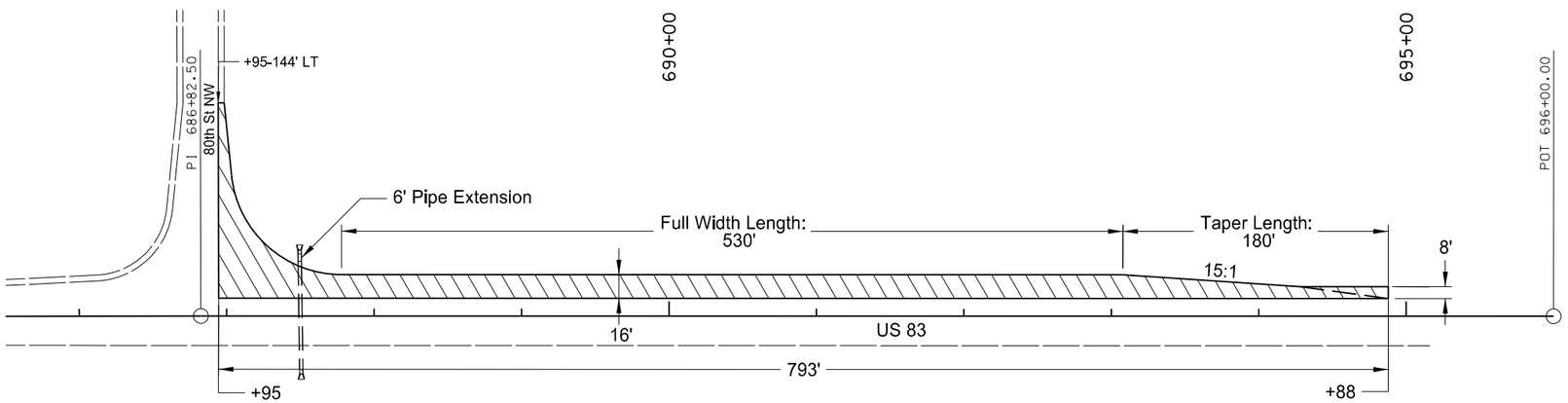

Spec	Code	Description	Quantity
302	120	Aggregate Base Course Cl 5	1186 TON
401	50	Tack Coat	77 GAL
401	60	Prime Coat	557 GAL
430	43	Superpave FAA 43	357 TON
714	615	Pipe Conc Reinf 24IN CL III	6 LF
714	9660	Remove & Relay End Section-All Type	1 EA

Superpave FAA 43

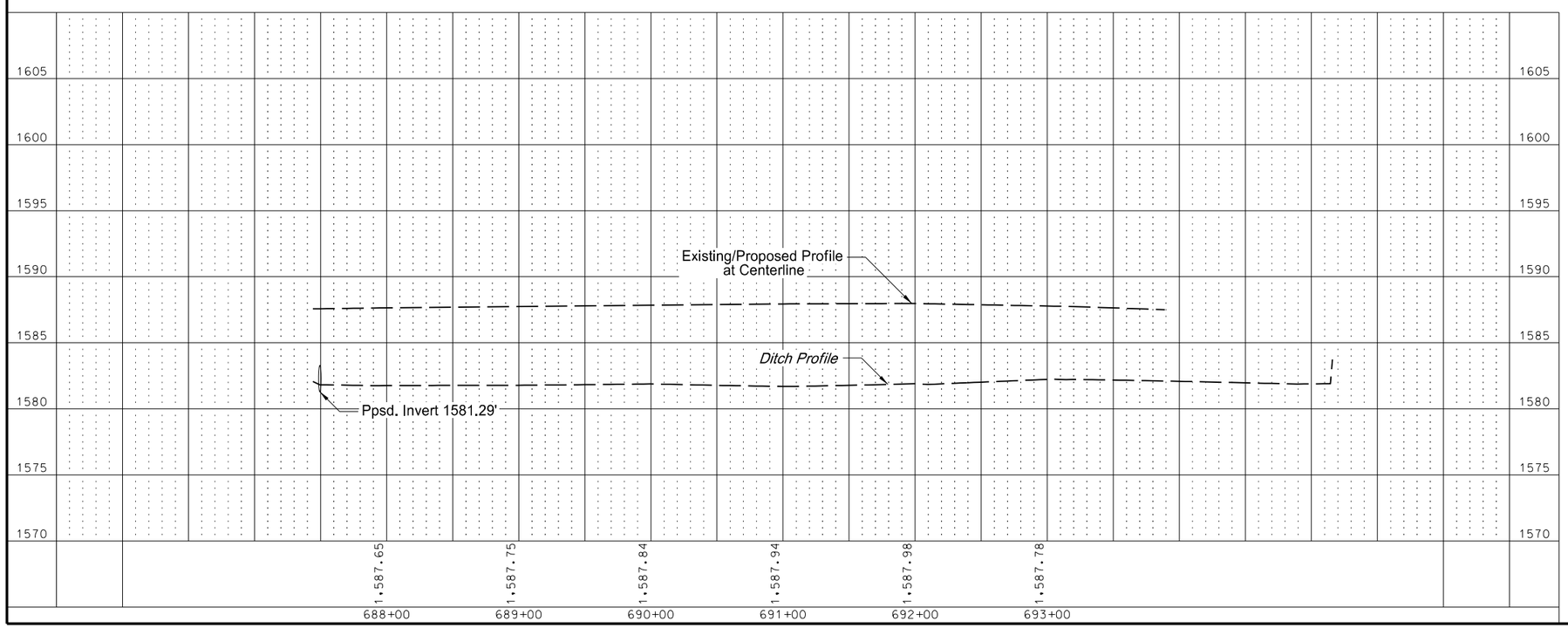

This document was originally issued and sealed by Aaron Murra Registration Number PE- 6536, on 8/14/15 and the original document is stored at the North Dakota Department of Transportation

Plan & Profile

Site #2 (RP 223.9)
Sta 686+95 - Sta 694+88

N of Minot between 83rd St NW and Glenburn Rd

STATE	PROJECT NO.	SECTION NO.	SHEET NO.
ND	SHE-4-083(113)219	60	5

Spec	Code	Description	Quantity
302	120	Aggregate Base Course Cl 5	1189 TON
401	50	Tack Coat	77 GAL
401	60	Prime Coat	558 GAL
430	43	Superpave FAA 43	358 TON

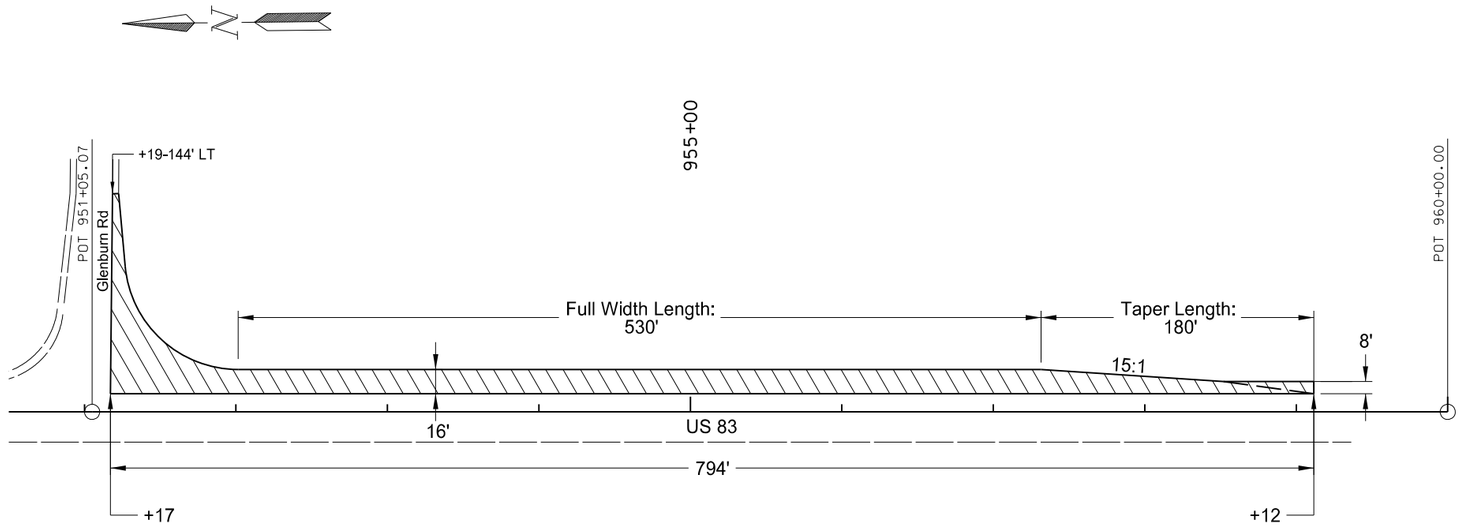

Superpave FAA 43

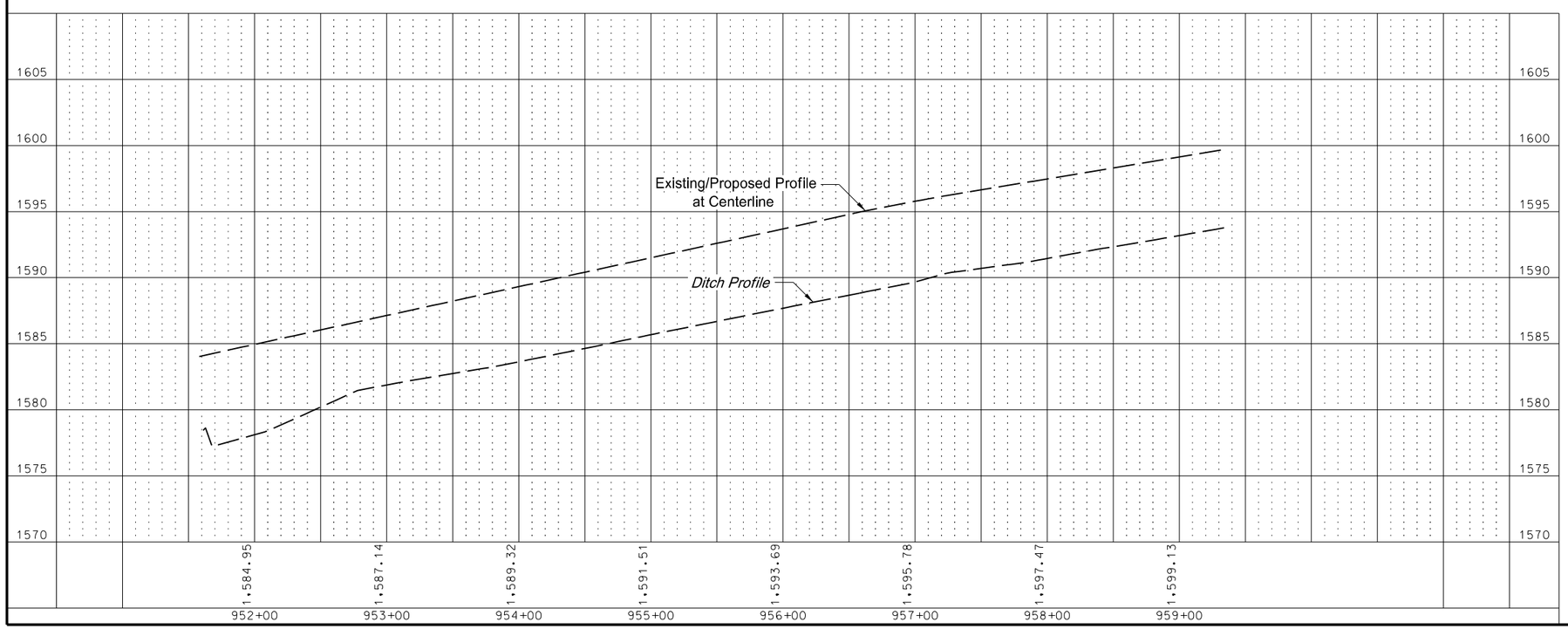

This document was originally issued and sealed by Aaron Murra Registration Number PE- 6536, on 8/14/15 and the original document is stored at the North Dakota Department of Transportation

Plan & Profile

Site #3 (RP 218.9)
Sta 951+17 - Sta 959+12

N of Minot between 83rd St NW and Glenburn Rd

STATE	PROJECT NO.	SECTION NO.	SHEET NO.
ND	SHE-4-083(113)219	75	1

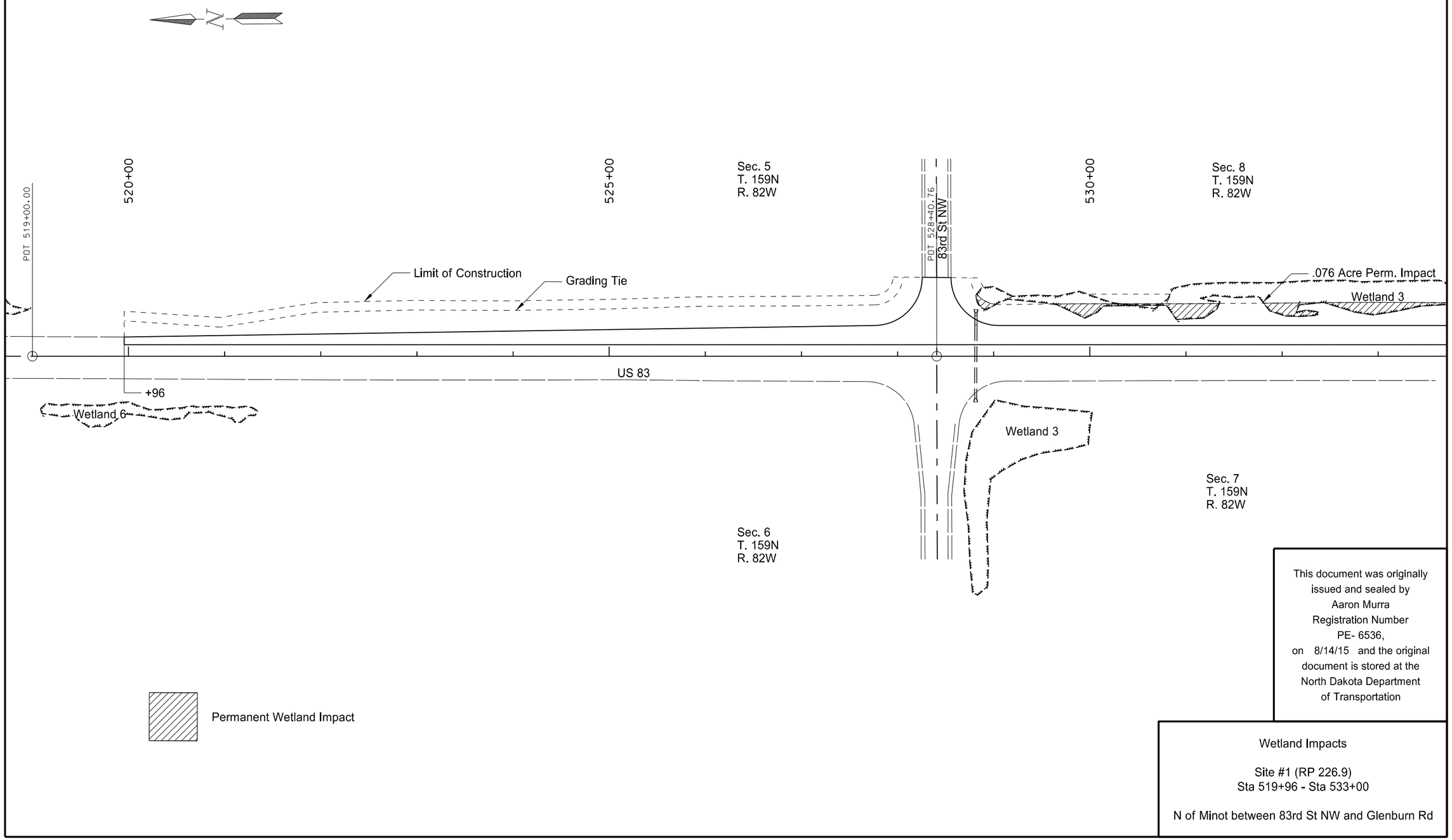

This document was originally issued and sealed by Aaron Murra Registration Number PE- 6536, on 8/14/15 and the original document is stored at the North Dakota Department of Transportation

Wetland Impacts

Site #1 (RP 226.9)
Sta 519+96 - Sta 533+00

N of Minot between 83rd St NW and Glenburn Rd

STATE	PROJECT NO.	SECTION NO.	SHEET NO.
ND	SHE-4-083(113)219	75	2

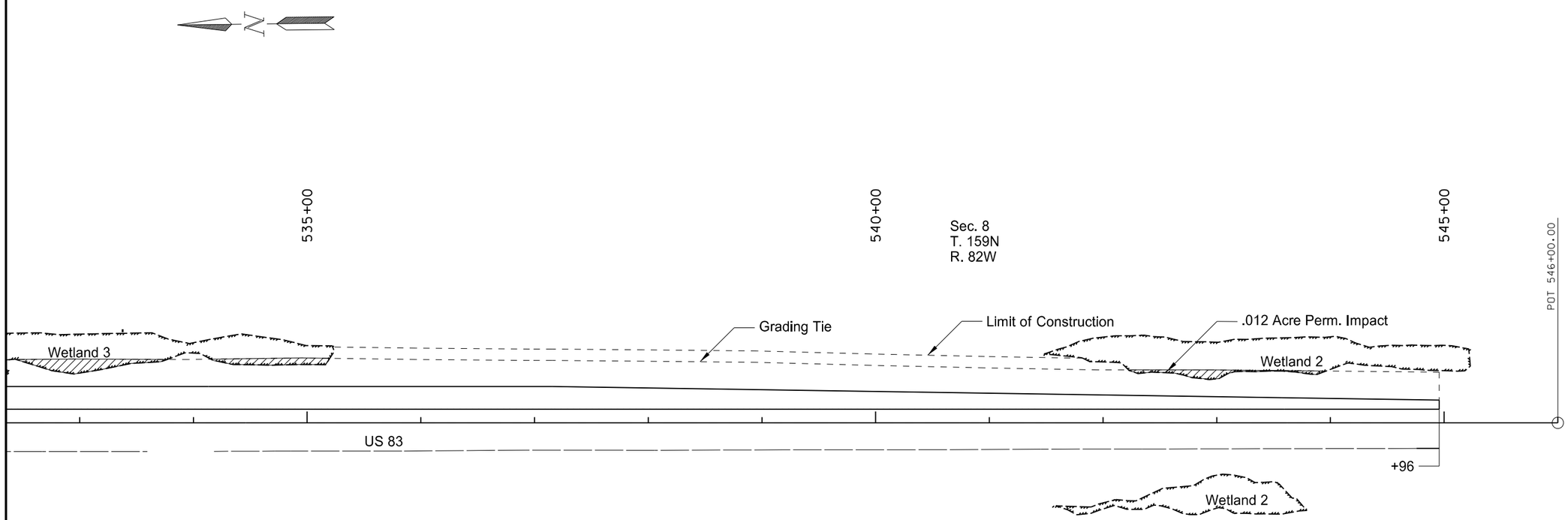

Sec. 7
T. 159N
R. 82W

Permanent Wetland Impact

This document was originally issued and sealed by Aaron Murra Registration Number PE- 6536, on 8/14/15 and the original document is stored at the North Dakota Department of Transportation

Wetland Impacts

Site #1 (RP 226.9)
Sta 533+00 - Sta 544+96

N of Minot between 83rd St NW and Glenburn Rd

STATE	PROJECT NO.	SECTION NO.	SHEET NO.
ND	SHE-4-083(113)219	76	1

Spec	Code	Description	Quantity
251	2000	Temporary Cover Crop	0.834 ACRE
253	101	Straw Mulch	0.834 ACRE
261	112	Fiber Rolls 12IN	471 LF
261	113	Remove Fiber Rolls 12IN	471 LF

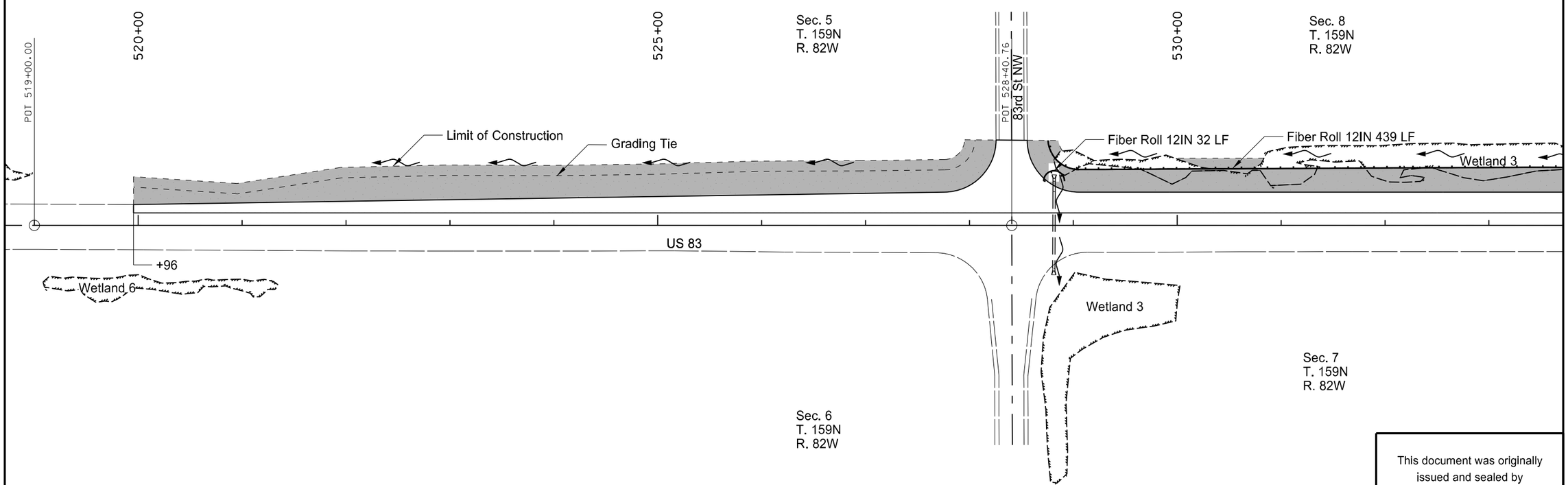

Temporary Cover Crop
& Straw Mulch

This document was originally issued and sealed by Aaron Murra Registration Number PE- 6536, on 8/14/15 and the original document is stored at the North Dakota Department of Transportation

Temporary Erosion Control

Site #1 (RP 226.9)
Sta 519+96 - Sta 533+00

N of Minot between 83rd St NW and Glenburn Rd

STATE	PROJECT NO.	SECTION NO.	SHEET NO.
ND	SHE-4-083(113)219	76	2

Spec	Code	Description	Quantity
251	2000	Temporary Cover Crop	0.8 ACRE
253	101	Straw Mulch	0.8 ACRE
261	112	Fiber Rolls 12IN	688 LF
261	113	Remove Fiber Rolls 12IN	688 LF

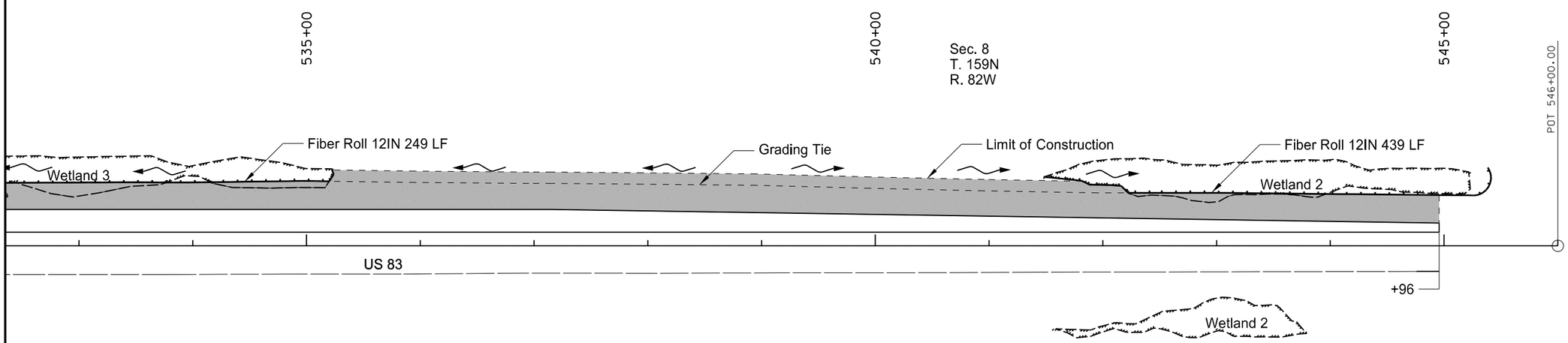

Sec. 7
T. 159N
R. 82W

Temporary Cover Crop
& Straw Mulch

This document was originally issued and sealed by Aaron Murra Registration Number PE- 6536, on 8/25/15 and the original document is stored at the North Dakota Department of Transportation

Temporary Erosion Control

Site #1 (RP 226.9)
Sta 533+00 - Sta 544+96

N of Minot between 83rd St NW and Glenburn Rd

STATE	PROJECT NO.	SECTION NO.	SHEET NO.
ND	SHE-4-083(113)219	76	3

Spec	Code	Description	Quantity
251	2000	Temporary Cover Crop	0.590 ACRE
253	101	Straw Mulch	0.590 ACRE
261	112	Fiber Rolls 12IN	251 LF
261	113	Remove Fiber Rolls 12IN	251 LF

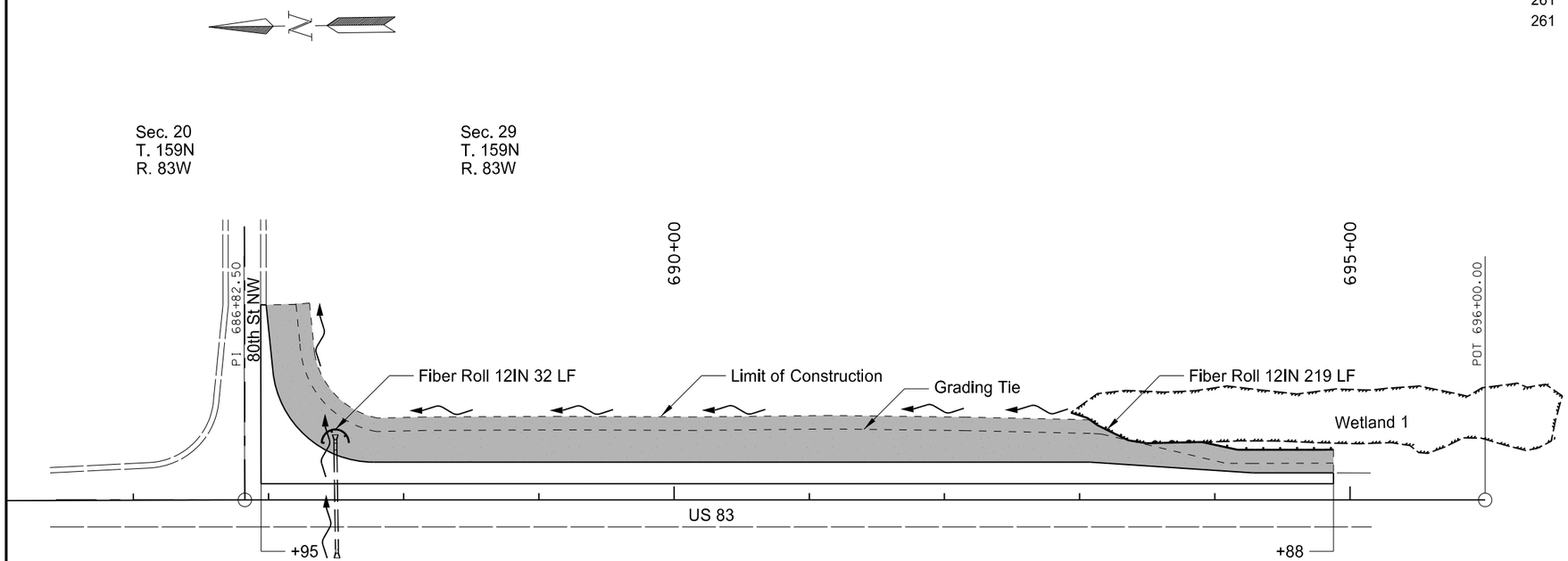

Sec. 19
T. 159N
R. 83W

Sec. 30
T. 159N
R. 83W

Temporary Cover Crop
& Straw Mulch

This document was originally issued and sealed by Aaron Murra Registration Number PE- 6536, on 8/25/15 and the original document is stored at the North Dakota Department of Transportation

Temporary Erosion Control

Site #2 (RP 223.9)
Sta 686+95 - Sta 694+88

N of Minot between 83rd St NW and Glenburn Rd

STATE	PROJECT NO.	SECTION NO.	SHEET NO.
ND	SHE-4-083(113)219	76	4

Spec	Code	Description	Quantity
251	2000	Temporary Cover Crop	0.579 ACRE
253	101	Straw Mulch	0.579 ACRE
261	112	Fiber Rolls 12IN	40 LF
261	113	Remove Fiber Rolls 12IN	40 LF

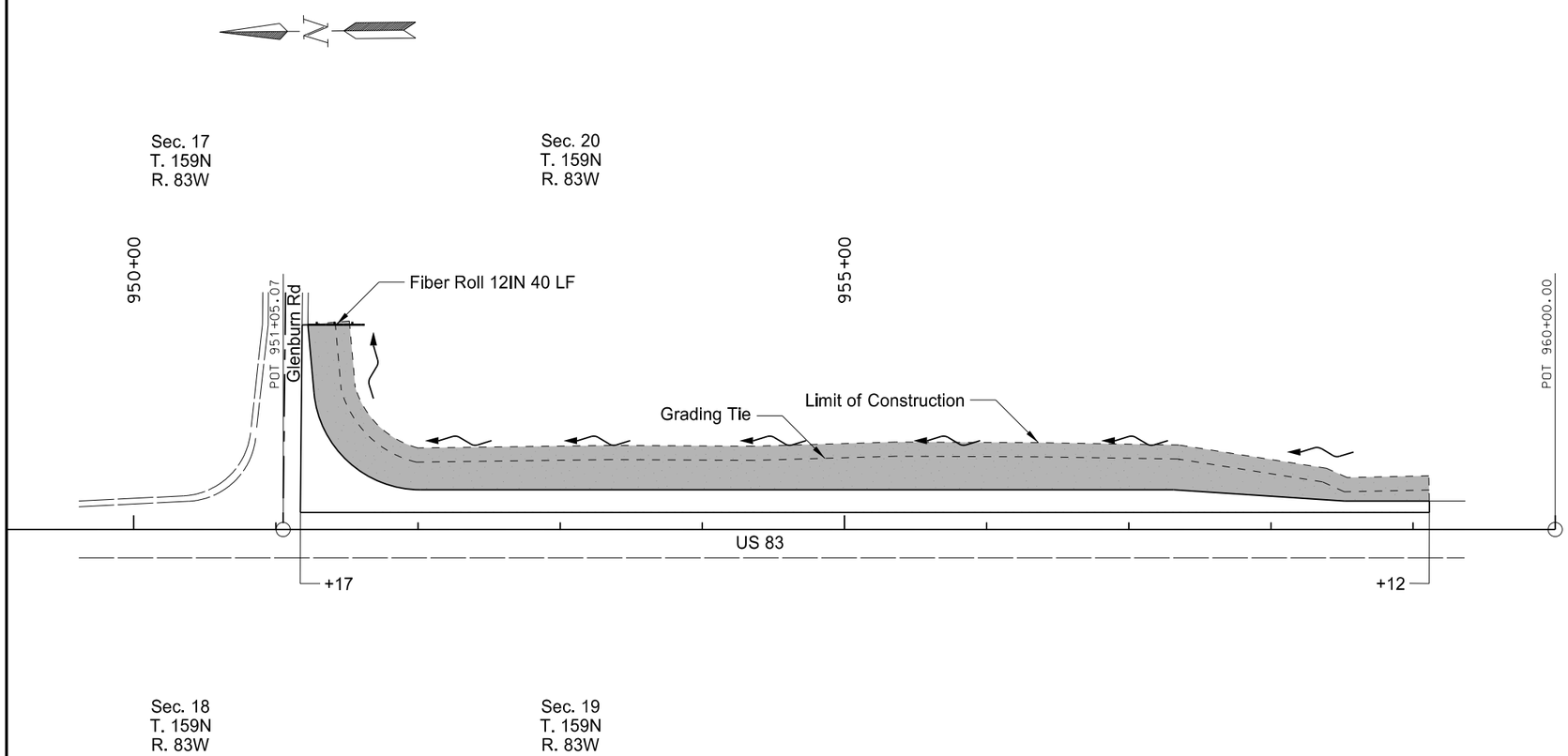

Temporary Cover Crop
& Straw Mulch

This document was originally issued and sealed by Aaron Murra Registration Number PE- 6536, on 8/14/15 and the original document is stored at the North Dakota Department of Transportation

Temporary Erosion Control

Site #3 (RP 218.9)
Sta 951+17 - Sta 959+12

N of Minot between 83rd St NW and Glenburn Rd

STATE	PROJECT NO.	SECTION NO.	SHEET NO.
ND	SHE-4-083(113)219	77	1

Spec	Code	Description	Quantity
251	200	Seeding Class II	0.834 ACRE
253	101	Straw Mulch	0.834 ACRE
255	101	ECB Type 1	21 SY

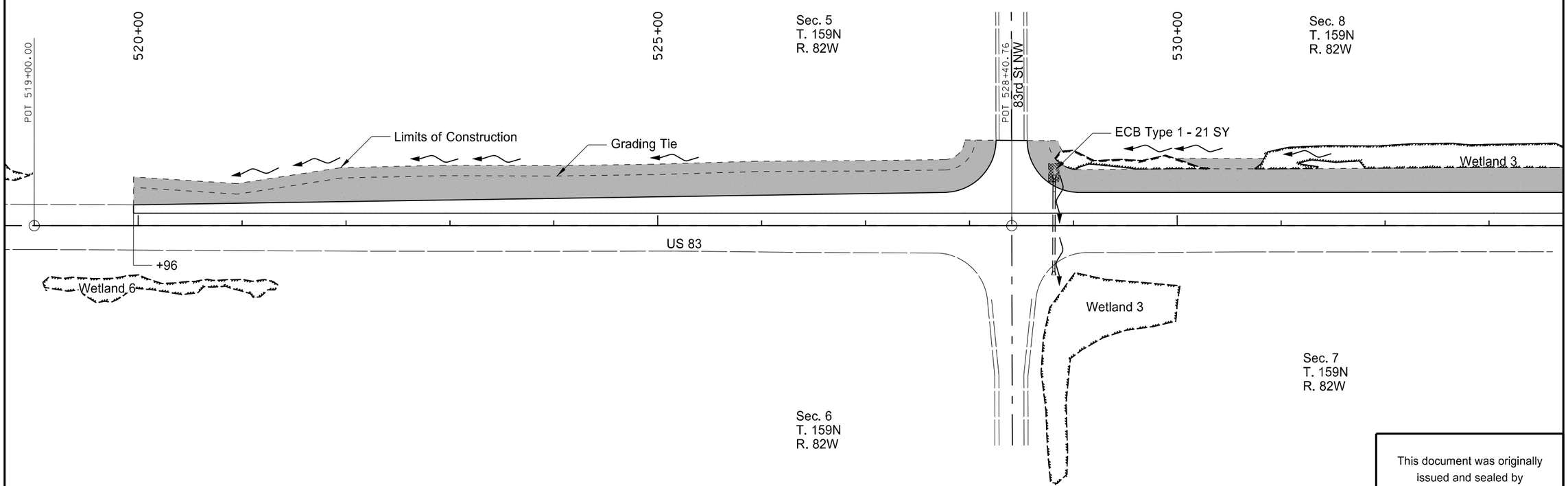

Straw Mulch and Seeding Class II

This document was originally issued and sealed by Aaron Murra Registration Number PE- 6536, on 8/14/15 and the original document is stored at the North Dakota Department of Transportation

Permanent Erosion Control

Site #1 (RP 226.9)
Sta 519+96 - Sta 533+00

N of Minot between 83rd St NW and Glenburn Rd

STATE	PROJECT NO.	SECTION NO.	SHEET NO.
ND	SHE-4-083(113)219	77	2

Spec	Code	Description	Quantity
251	200	Seeding Class II	0.8 ACRE
253	101	Straw Mulch	0.8 ACRE

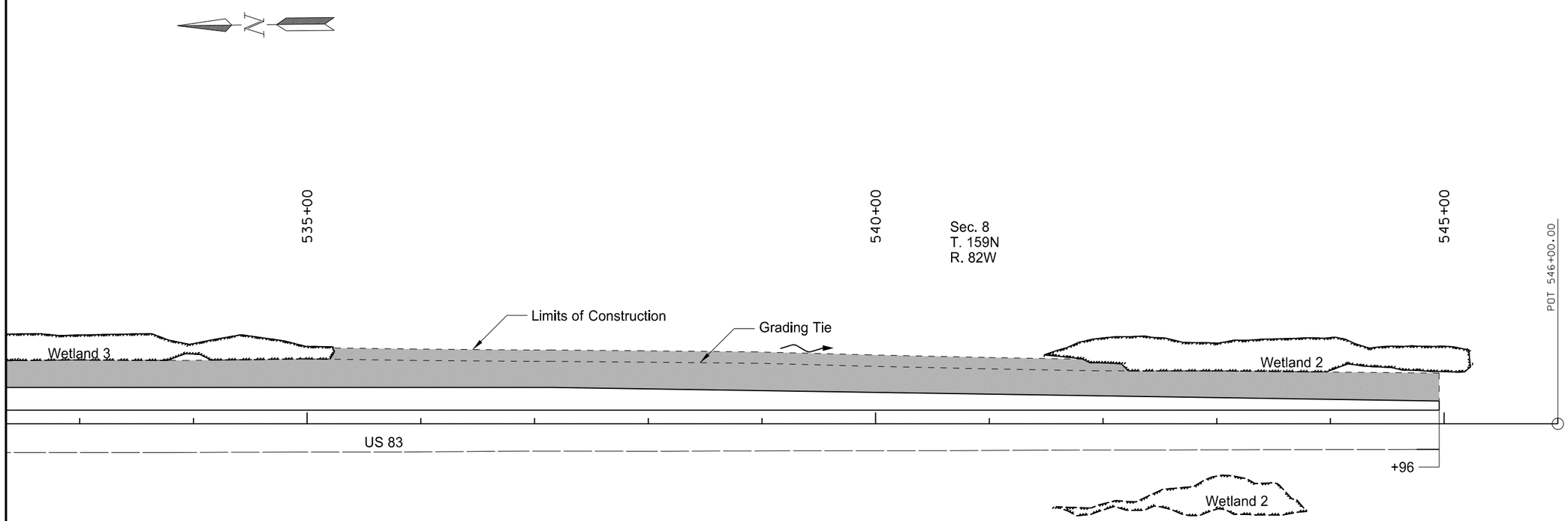

Sec. 7
T. 159N
R. 82W

Straw Mulch and Seeding Class II

This document was originally issued and sealed by Aaron Murra Registration Number PE- 6536, on 8/14/15 and the original document is stored at the North Dakota Department of Transportation

Permanent Erosion Control

Site #1 (RP 226.9)
Sta 533+00 - Sta 544+96

N of Minot between 83rd St NW and Glenburn Rd

STATE	PROJECT NO.	SECTION NO.	SHEET NO.
ND	SHE-4-083(113)219	77	3

Spec	Code	Description	Quantity
251	200	Seeding Class II	0.590 ACRE
253	101	Straw Mulch	0.590 ACRE
255	101	ECB Type 1	21 SY

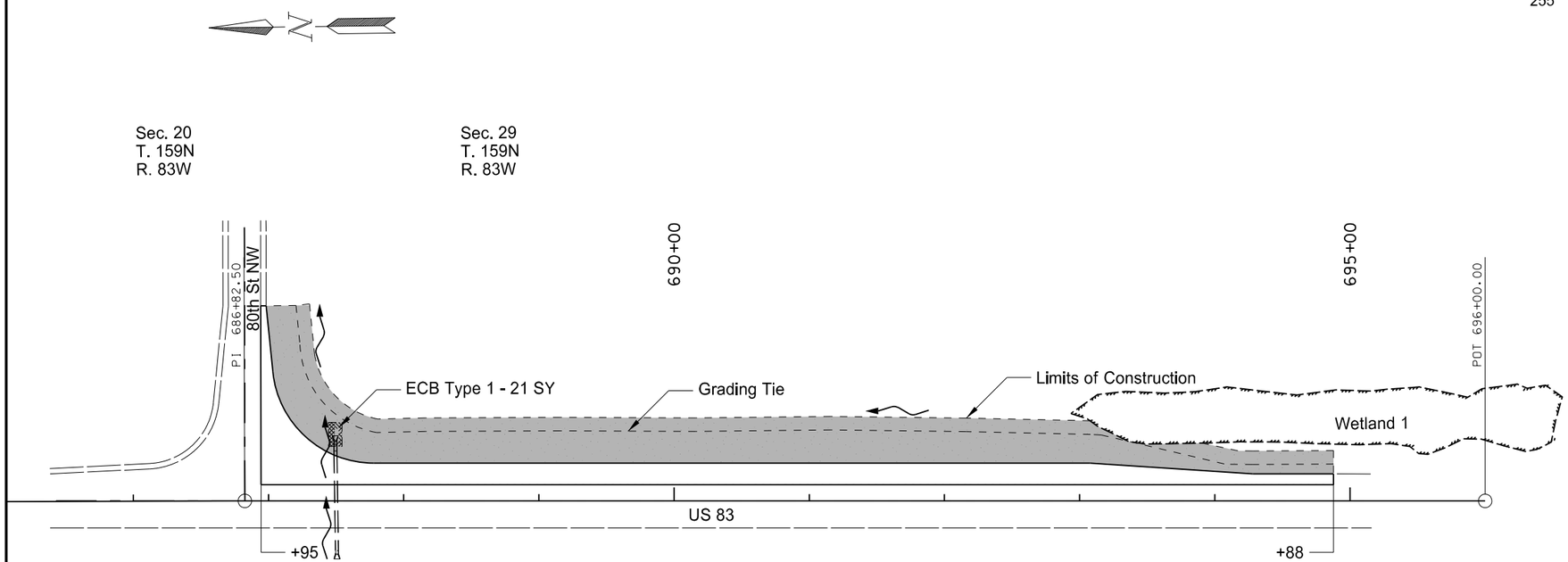

Sec. 19
T. 159N
R. 83W

Sec. 30
T. 159N
R. 83W

Straw Mulch and Seeding Class II

This document was originally issued and sealed by Aaron Murra Registration Number PE- 6536, on 8/14/15 and the original document is stored at the North Dakota Department of Transportation

Permanent Erosion Control

Site #2 (RP 223.9)
Sta 686+95 - Sta 694+88

N of Minot between 83rd St NW and Glenburn Rd

STATE	PROJECT NO.	SECTION NO.	SHEET NO.
ND	SHE-4-083(113)219	77	4

Spec	Code	Description	Quantity
251	200	Seeding Class II	0.579 ACRE
253	101	Straw Mulch	0.579 ACRE

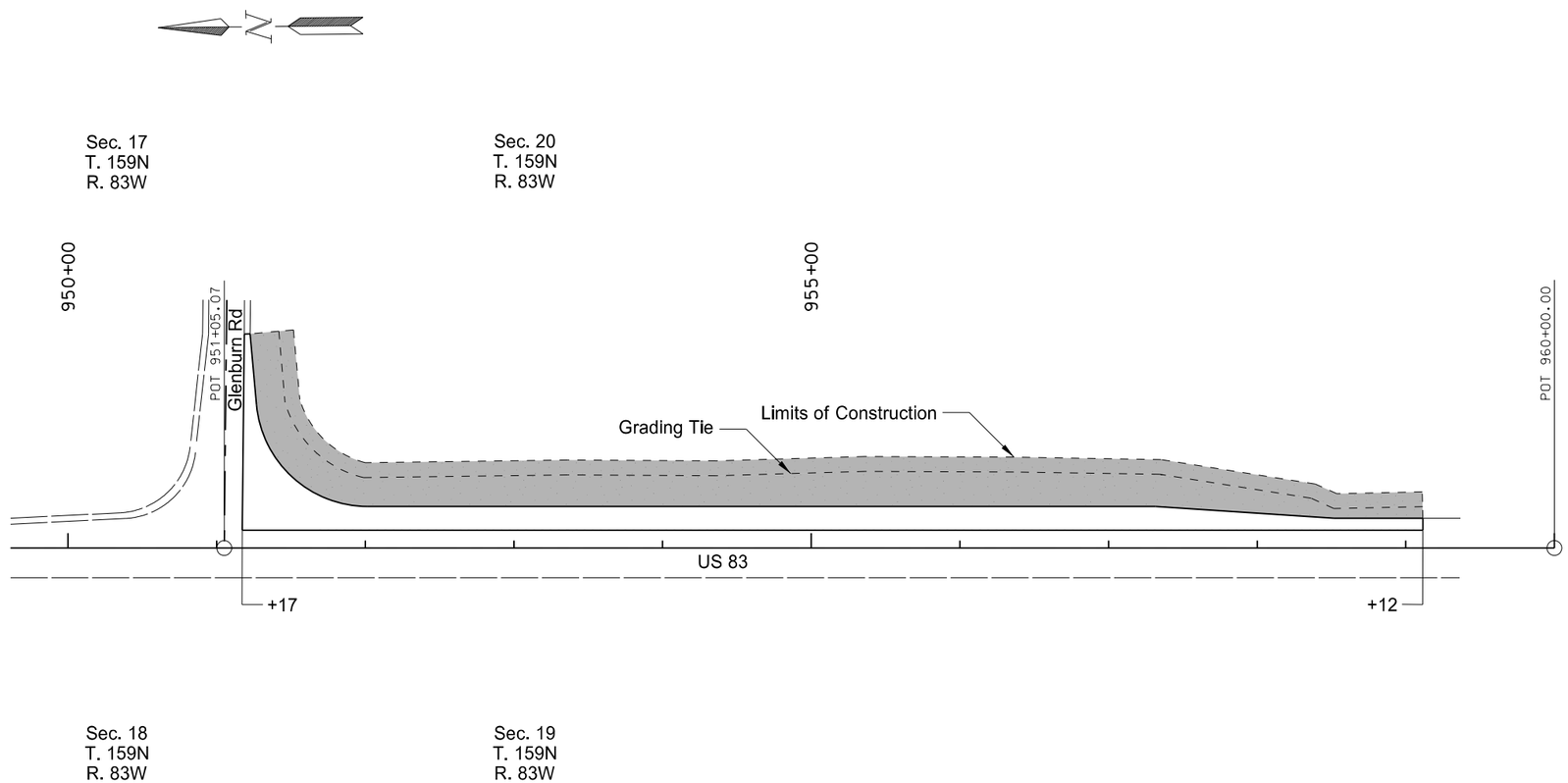

Straw Mulch and Seeding Class II

This document was originally issued and sealed by Aaron Murra Registration Number PE- 6536, on 8/14/15 and the original document is stored at the North Dakota Department of Transportation

Permanent Erosion Control

Site #3 (RP 218.9)
Sta 951+17 - Sta 959+12

N of Minot between 83rd St NW and Glenburn Rd

STATE	PROJECT NO.	SECTION NO.	SHEET NO.
ND	SHE-4-083(113)219	82	1

Beginning chain OCL_226_9 description

==========

Point 8000 N 589,613.9916 E 1,775,287.7274 Sta 519+00.00

Course from 8000 to 8001 N 0° 41' 14.82" E Dist 2,712.4428

Point 8001 N 592,326.2391 E 1,775,320.2712 Sta 546+00.00

==========

Ending chain OCL_226_9 description

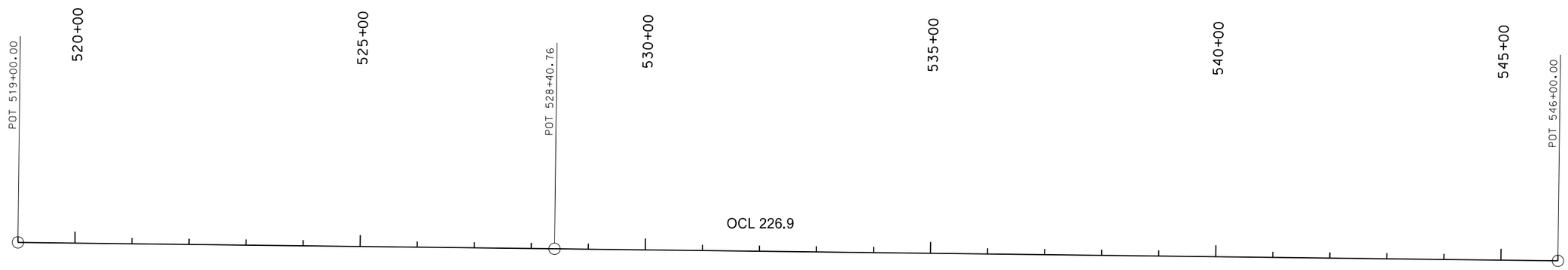

This document was originally issued and sealed by Aaron Murra Registration Number PE- 6536, on 8/14/15 and the original document is stored at the North Dakota Department of Transportation

Survey Coordinate Data

Site #1 (RP 226.9)

N of Minot between 83rd St NW and Glenburn Rd

STATE	PROJECT NO.	SECTION NO.	SHEET NO.
ND	SHE-4-083(113)219	82	2

Beginning chain OCL_223_9 description
==========

Point 8002 N 574,634.0312 E 1,775,115.9542 Sta 685+00.00

Course from 8002 to 8003 N 0° 45' 16.04" E Dist 900.0000

Point 8003 N 575,533.9532 E 1,775,127.8048 Sta 696+00.00

==========

Ending chain OCL_223_9 description

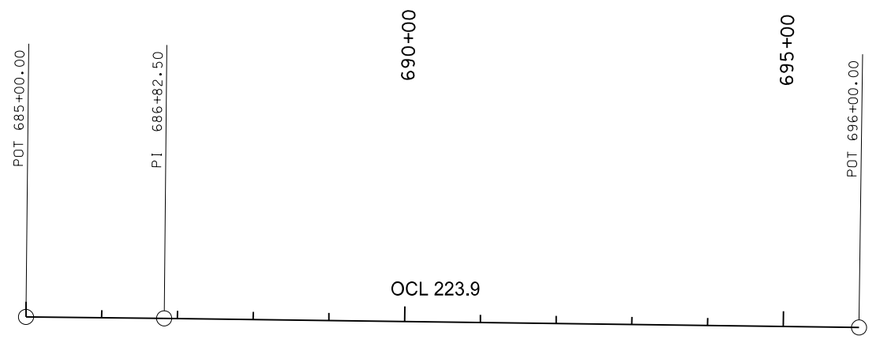

Beginning chain OCL_218_9 description
==========

Point 8000 N 548,226.7423 E 1,774,842.8294 Sta 949+00.00

Course from 8000 to 8001 N 0° 36' 03.23" E Dist 900.0000

Point 8001 N 549,126.6928 E 1,774,852.2682 Sta 960+00.00

==========

Ending chain OCL_218_9 description

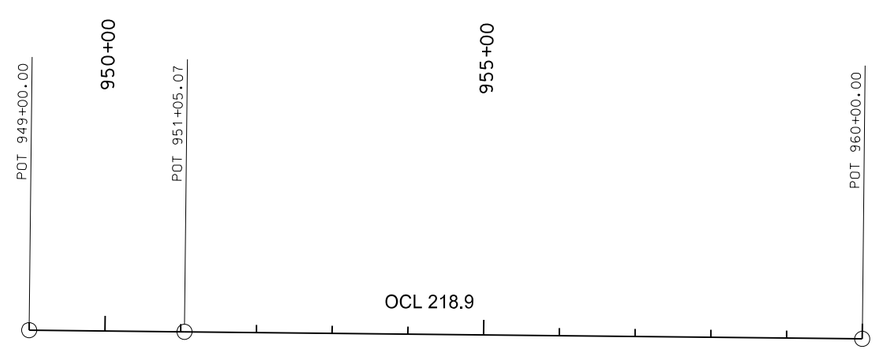

This document was originally issued and sealed by Aaron Murra Registration Number PE- 6536, on 8/14/15 and the original document is stored at the North Dakota Department of Transportation

Survey Coordinate Data

Site #2 (RP 223.9)
Site #3 (RP 218.9)

N of Minot between 83rd St NW and Glenburn Rd

STATE	PROJECT NO.	SECTION NO.	SHEET NO.
ND	SHE-4-083(113)219	100	1

SIGN NUMBER	SIGN SIZE	DESCRIPTION	AMOUNT REQUIRED	UNITS PER AMOUNT	UNITS SUB TOTAL
D3-36	36"x6"	STREET NAME SIGN (Sign and installation only)		6	
G20-1-60	**60"x24"**	**ROAD WORK NEXT __ MILES**	**2**	**34**	**68**
G20-1b-60	60"x24"	WORK IN PROGRESS/ NO WORK IN PROGRESS (Sign and installation only)		26	
G20-2-48	**48"x24"**	**END ROAD WORK**	**2**	**19**	**38**
G20-4-36	36"x18"	PILOT CAR FOLLOW ME (Mounted to back of pilot car)		18	
G20-10-108	108"x48"	CONTRACTOR SIGN		64	
G20-50a-72	**72"x36"**	**ROAD WORK NEXT __ MILES RT & LT ARROWS**	**6**	**37**	**222**
G20-52a-72	72"x24"	ROAD WORK NEXT __ MILES RT or LT ARROW		30	
G20-55-96	**96"x48"**	**SPEED LIMIT ENFORCED - MINIMUM FEE $80 WHEN WORKERS PRESENT**	**2**	**59**	**118**
M1-1-36	36"x36"	INTERSTATE ROUTE MARKER (Post and installation only)		10	
M1-4-24	24"x24"	U.S. ROUTE MARKER (Post and installation only)		10	
M1-5-24	24"x24"	STATE ROUTE MARKER (Post and installation only)		10	
M3-1-24	24"x12"	NORTH (Mounted on route marker post)		7	
M3-2-24	24"x12"	EAST (Mounted on route marker post)		7	
M3-3-24	24"x12"	SOUTH (Mounted on route marker post)		7	
M3-4-24	24"x12"	WEST (Mounted on route marker post)		7	
M4-8-24	24"x12"	DETOUR (Mounted on route marker post)		7	
M4-9-30	30"x24"	DETOUR ARROW RIGHT or LEFT/AHD AND RT or LT		15	
M4-10-48	48"x18"	DETOUR ARROW RIGHT or LEFT		23	
M5-1-21	21"x15"	ARROW AHD AND RT or LT(Mounted on route marker post)		7	
M5-2-21	21"x15"	ARROW AHD UP & RT or LT (Mounted on route marker post)		7	
M6-1-21	21"x15"	ARROW RT or LT (Mounted on route marker post)		7	
M6-2-21	21"x15"	ARROW UP & RT or LT (Mounted on route marker post)		7	
M6-3-21	21"x15"	ARROW AHD (Mounted on route marker post)		7	
R1-1-48	48"x48"	STOP		32	
R1-1a-18	**18"x18"**	**STOP and SLOW PADDLE Back to Back**	**6**	**5**	**30**
R1-2-60	60"x60"	YIELD		29	
R2-1-48	**48"x60"**	**SPEED LIMIT __**	**12**	**39**	**468**
R2-1a-24	**24"x18"**	**MINIMUM FEE $80 (Mounted on Speed Limit post)**	**6**	**10**	**60**
R3-7-48	48"x48"	LEFT or RIGHT LANE MUST TURN LEFT or RIGHT		35	
R4-1-48	48"x60"	DO NOT PASS		39	
R4-7-48	48"x60"	KEEP RIGHT SYMBOL		39	
R5-1-48	48"x48"	DO NOT ENTER		35	
R6-1-36	36"x12"	ONE WAY RIGHT or LEFT		13	
R7-1-12	12"x18"	NO PARKING		11	
R10-6-24	24"x36"	STOP HERE ON RED		16	
R11-2-48	48"x30"	ROAD CLOSED		28	
R11-2a-48	48"x30"	STREET CLOSED		28	
R11-3a-60	60"x30"	ROAD CLOSED __ MILES AHEAD LOCAL TRAFFIC ONLY		31	
R11-3c-60	60"x30"	STREET CLOSED __ MILES AHEAD LOCAL TRAFFIC ONLY		31	
R11-4a-60	60"x30"	STREET CLOSED TO THRU TRAFFIC		31	
W1-3-48	48"x48"	RIGHT or LEFT SHARP REVERSE CURVE ARROW		35	
W1-4-48	48"x48"	RIGHT or LEFT REVERSE CURVE ARROW		35	
W1-4b-48	48"x48"	DOUBLE RIGHT or LEFT REVERSE CURVE ARROW		35	
W1-6-48	48"x24"	LARGE ARROW		26	
W3-1-48	48"x48"	STOP AHEAD SYMBOL		35	
W3-3-48	48"x48"	SIGNAL AHEAD SYMBOL		35	
W3-4-48	48"x48"	BE PREPARED TO STOP		35	
W3-5-48	**48"x48"**	**SPEED REDUCTION AHEAD**	**6**	**35**	**210**
W4-2-48	48"x48"	RIGHT or LEFT LANE TRANSITION SYMBOL		35	
W5-1-48	48"x48"	ROAD NARROWS		35	
W5-8-48	48"x48"	THRU TRAFFIC RIGHT LANE		35	
W5-9-48	48"x48"	ROAD WORK TRAFFIC ONLY DOWN & LT or RT ARROW		35	
W6-3-48	48"x48"	TWO WAY TRAFFIC SYMBOL		35	
W8-1-48	48"x48"	BUMP		35	
W8-3-48	48"x48"	PAVEMENT ENDS		35	
W8-7-48	48"x48"	LOOSE GRAVEL		35	
W8-9a-48	48"x48"	SHOULDER DROP-OFF		35	
W8-11-48	48"x48"	UNEVEN LANES		35	
W8-12-48	48"x48"	NO CENTER STRIPE		35	
W8-53-48	48"x48"	TRUCKS ENTERING HIGHWAY		35	
W8-54-48	48"x48"	TRUCKS ENTERING AHEAD or __ FT.		35	
W8-55-48	48"x48"	TRUCKS CROSSING AHEAD or __ FT.		35	
W8-56-48	48"x48"	TRUCKS EXITING HIGHWAY		35	
W9-3a-48	48"x48"	CENTER LANE CLOSED SYMBOL		35	
W12-2-48	48"x48"	LOW CLEARANCE SYMBOL		35	
W13-1-24	24"x24"	__ MPH ADVISORY SPEED PLATE (Mounted on warning sign post)		11	
W13-4-48	48"x60"	RAMP ARROW		39	
W14-3-48	48"x36"	NO PASSING ZONE		23	
W20-1-48	**48"x48"**	**ROAD WORK AHEAD or _FT or _ MILE**	**2**	**35**	**70**
W20-2-48	48"x48"	DETOUR AHEAD or __ FT		35	
W20-3-48	48"x48"	ROAD or STREET CLOSED AHEAD or __ FT.		35	
W20-4-48	**48"x48"**	**ONE LANE ROAD AHEAD or __ FT.**	**6**	**35**	**210**
W20-5-48	48"x48"	RIGHT or LEFT LANE CLOSED AHEAD or __ FT.		35	
W20-7a-48	**48"x48"**	**FLAGGING SYMBOL**	**6**	**35**	**210**
W20-7k-24	**24"x18"**	**__ FEET (Mounted on warning sign post)**	**6**	**10**	**60**
W20-8-48	48"x48"	STREET CLOSED		35	
W20-51-48	48"x48"	EQUIPMENT WORKING		35	
W20-52-54	54"x12"	NEXT __ MILES (Mounted on warning sign post)		12	
W21-1a-48	48"x48"	WORKERS SYMBOL		35	
W21-2-48	48"x48"	FRESH OIL		35	
W21-3-48	48"x48"	ROAD MACHINERY AHEAD or __ FT		35	

SIGN NUMBER	SIGN SIZE	DESCRIPTION	AMOUNT REQUIRED	UNITS PER AMOUNT	UNITS SUB TOTAL
W21-5-48	**48"x48"**	**SHOULDER WORK**	**3**	**35**	**105**
W21-5a-48	48"x48"	RIGHT or LEFT SHOULDER CLOSED		35	
W21-5b-48	48"x48"	RIGHT or LEFT SHOULDER CLOSED AHEAD or __ FT.		35	
W21-6a-48	48"x48"	SURVEY CREW AHEAD		35	
W21-50-48	48"x48"	BRIDGE PAINTING AHEAD or __ FT.		35	
W21-51-48	48"x48"	MATERIAL ON ROADWAY		35	
W22-8-48	48"x48"	FRESH OIL LOOSE ROCK		35	
	24"x24"	TAKE TURNS (6" D letters) (Mounted on stop sign post)		11	

SPECIAL SIGNS

SPEC & CODE

704-1000	**TRAFFIC CONTROL SIGNS**	**TOTAL UNITS**	**1869**

SPEC & CODE	DESCRIPTION	UNIT	QUANTITY
704-0100	**FLAGGING**	**MHR**	**200**
704-1041	ATTENUATION DEVICE-TYPE B-55	EACH	
704-1043	ATTENUATION DEVICE-TYPE B-65	EACH	
704-1044	ATTENUATION DEVICE-TYPE B-70	EACH	
704-1050	TYPE I BARRICADES	EACH	
704-1051	TYPE II BARRICADES	EACH	
704-1052	TYPE III BARRICADES	EACH	
704-1060	**DELINEATOR DRUMS**	**EACH**	**73**
704-1065	TRAFFIC CONES	EACH	
704-1067	**TUBULAR MARKERS**	**EACH**	**64**
704-1070	DELINEATOR	EACH	
704-1072	FLEXIBLE DELINEATORS	EACH	
704-1081	VERTICAL PANELS - BACK TO BACK	EACH	
704-1085	SEQUENCING ARROW PANEL - TYPE A	EACH	
704-1086	SEQUENCING ARROW PANEL - TYPE B	EACH	
704-1087	SEQUENCING ARROW PANEL - TYPE C	EACH	
704-1088	SEQUENCING ARROW PANEL - TYPE C - CROSSOVER	EACH	
704-1095	TYPE B FLASHERS	EACH	
704-3501	PORTABLE PRECAST CONCRETE MED BARRIER	LF	
704-3510	PRECAST CONCRETE MED BARRIER - STATE FURNISHED	EACH	
762-0200	RAISED PAVEMENT MARKERS	EACH	
762-0420	SHORT TERM 4IN LINE - TYPE R	LF	
762-0430	SHORT TERM 4IN LINE - TYPE NR	LF	
762-1500	OBLITERATION OF PVMT MK	SF	
772-2110	FLASHING BEACON - POST MOUNTED	EACH	

NOTE:
If additional signs are required, units will be calculated using the formula from Section III-19.06 of the Design Manual.
http://www.dot.nd.gov/

This document was originally issued and sealed by Aaron Murra, Registration Number PE-6536, on 8/4/15 and the original document is stored at the North Dakota Department of Transportation.

Traffic Control Devices List

N of Minot between 83rd St NW and Glenburn Rd

STATE	PROJECT NO.	SECTION NO.	SHEET NO.
ND	SHE-4-083(113)219	100	2

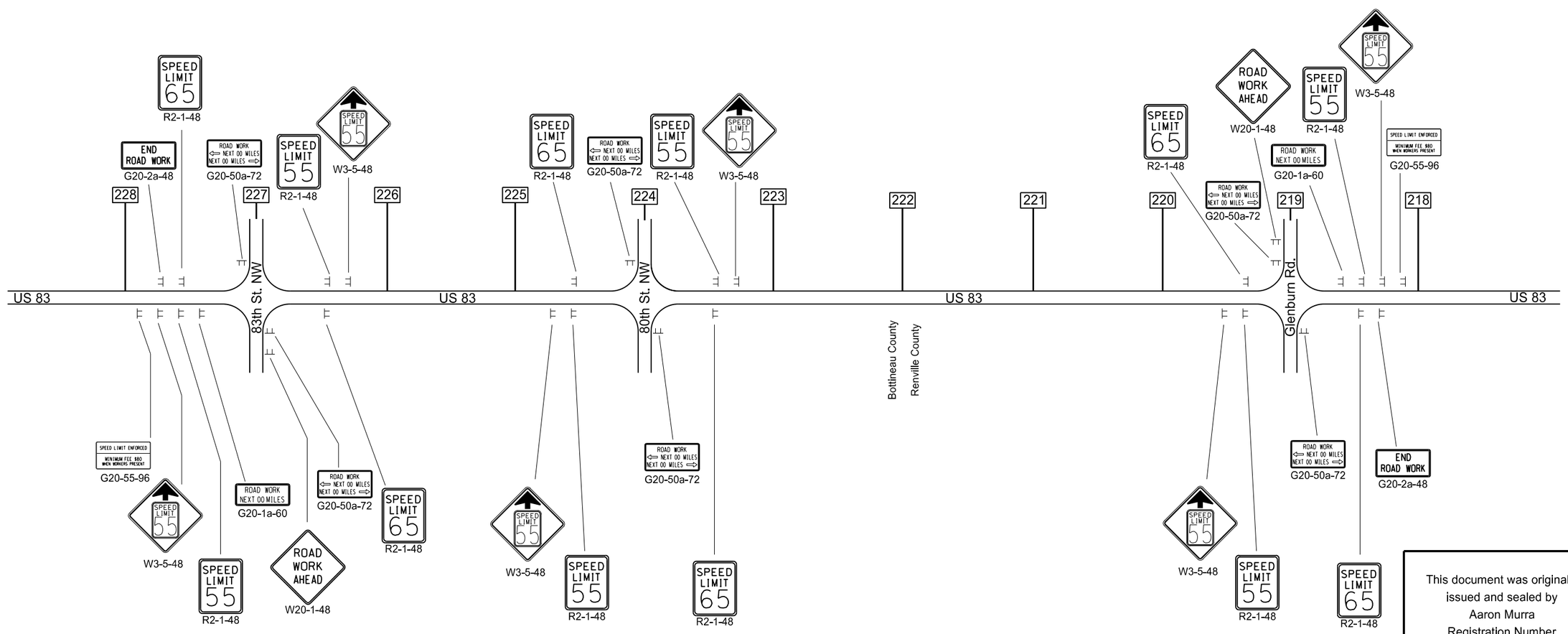

This document was originally issued and sealed by Aaron Murra Registration Number PE- 6536, on 8/4/2015 and the original document is stored at the North Dakota Department of Transportation

Traffic Control

N of Minot between 83rd St NW and Glenburn Rd

STATE	PROJECT NO.	SECTION NO.	SHEET NO.
ND	SHE-4-083(113)219	110	1

(A) If turning lane length is greater than 300', a third arrow shall be placed beginning at ½ the length of the turn lane.

(B) Continue pavement marking approximately ⅔ of the way into the radius.

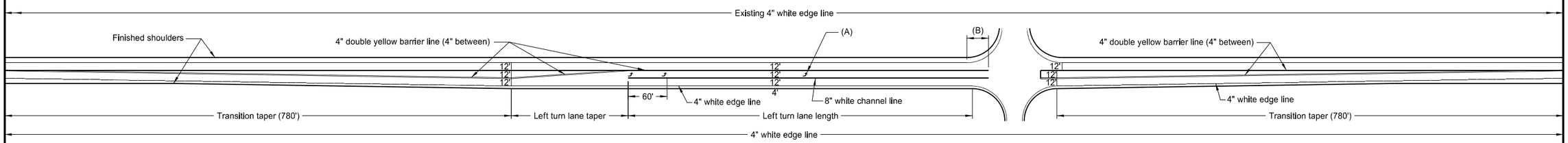

Left Turn Lane (83rd St NW)

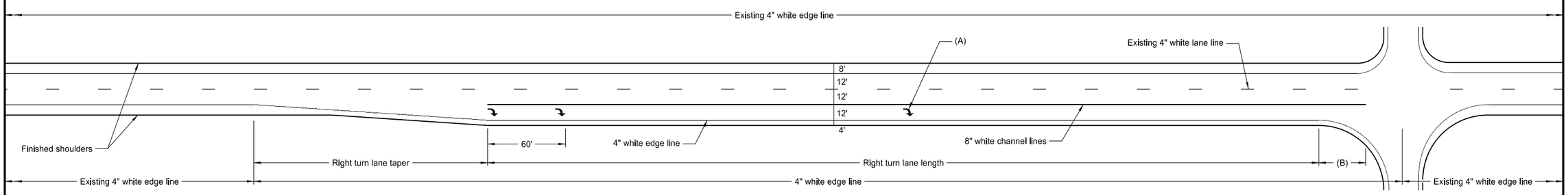

Typical Right Turn Lane

Site 1 (Glenburn Rd)

Pavement marking painted message
Right arrow (x3) 48 SF

Pavement marking painted 4in line
4" white edge line 860 LF

Pavement marking painted 8in line
8" white channel line 563 LF

Obliteration of pvmt mk
4" white edge line 60 SF

Site 2 (80th St NW)

Pavement marking painted message
Right arrow (x3) 48 SF

Pavement marking painted 4in line
4" white edge line 860 LF

Pavement marking painted 8in line
8" white channel line 563 LF

Obliteration of pvmt mk
4" white edge line 60 SF

Reset sign panel
RP 223.953 (Upham rt arrow) 1 EA

Reset sign support
RP 223.953 (Upham rt arrow) 2 EA

Site 3 (83rd St NW)

Pavement marking painted message
Left arrow (x3) 48 SF

Pavement marking painted 4in line

4" white edge line	2540 LF
4" double yellow barrier line (4" between)	8392 LF
Total	10932 LF

Pavement marking painted 8in line
8" white channel line 655 LF

Obliteration of pvmt mk

4' white lane line	200 SF
4" white edge line	600 SF
Total	800 SF

Reset sign panel

RP 226.839 (lt arrow Grano 13)	1 EA
RP 226.895 (Westhope/Landsford)	1 EA
RP 226.948 (camping with arrow)	1 EA
Total	3 EA

Reset sign support

RP 226.839 (lt arrow Grano 13)	2 EA
RP 226.895 (Westhope/Landsford)	2 EA
RP 226.948 (camping with arrow)	1 EA
Total	5 EA

This document was originally issued and sealed by Douglas A. Schumaker, Registration Number PE- 5047, on 8/25/15 and the original document is stored at the North Dakota Department of Transportation

Signing and Pavement Marking Layout

Typical Turn Lanes

US 83

STATE	PROJECT NO.	SECTION NO.	SHEET NO.
ND	SHE-4-083(113)219	200	1

US 83 - Site #1 (RP 226.9)

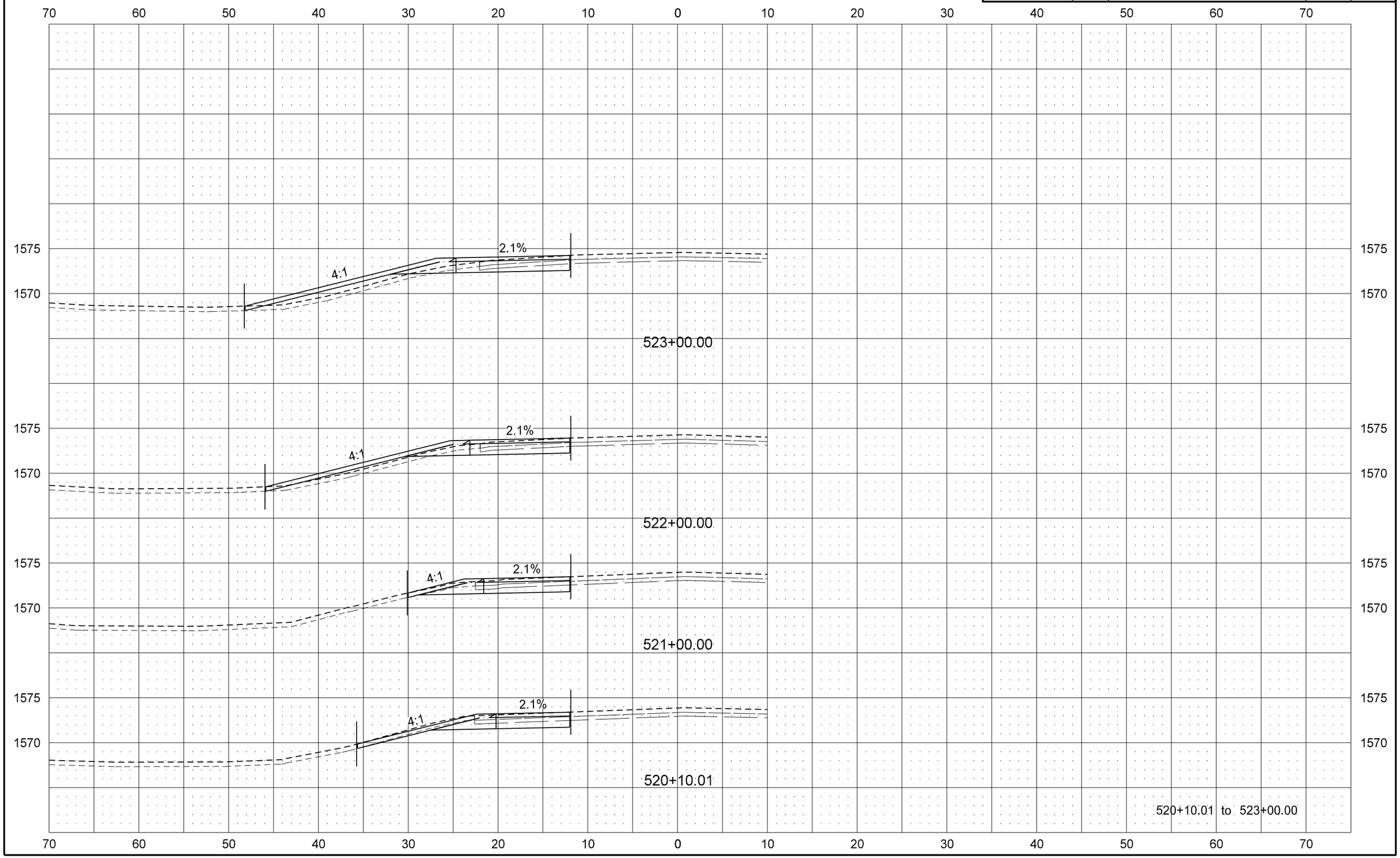

STATE	PROJECT NO.	SECTION NO.	SHEET NO.
ND	SHE-4-083(113)219	200	2

US 83 - Site #1 (RP 226.9)

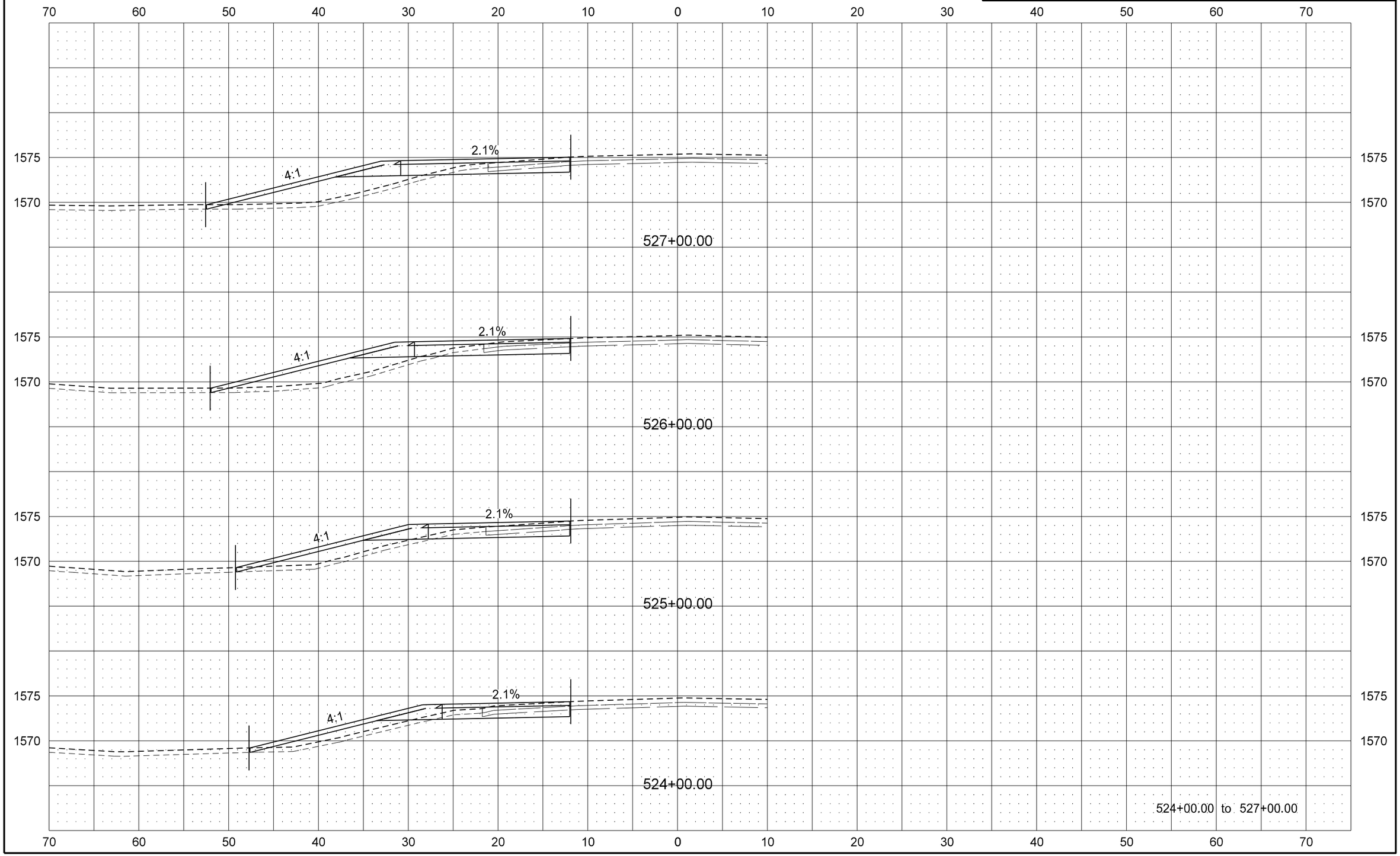

STATE	PROJECT NO.	SECTION NO.	SHEET NO.
ND	SHE-4-083(113)219	200	3

US 83 - Site #1 (RP 226.9)

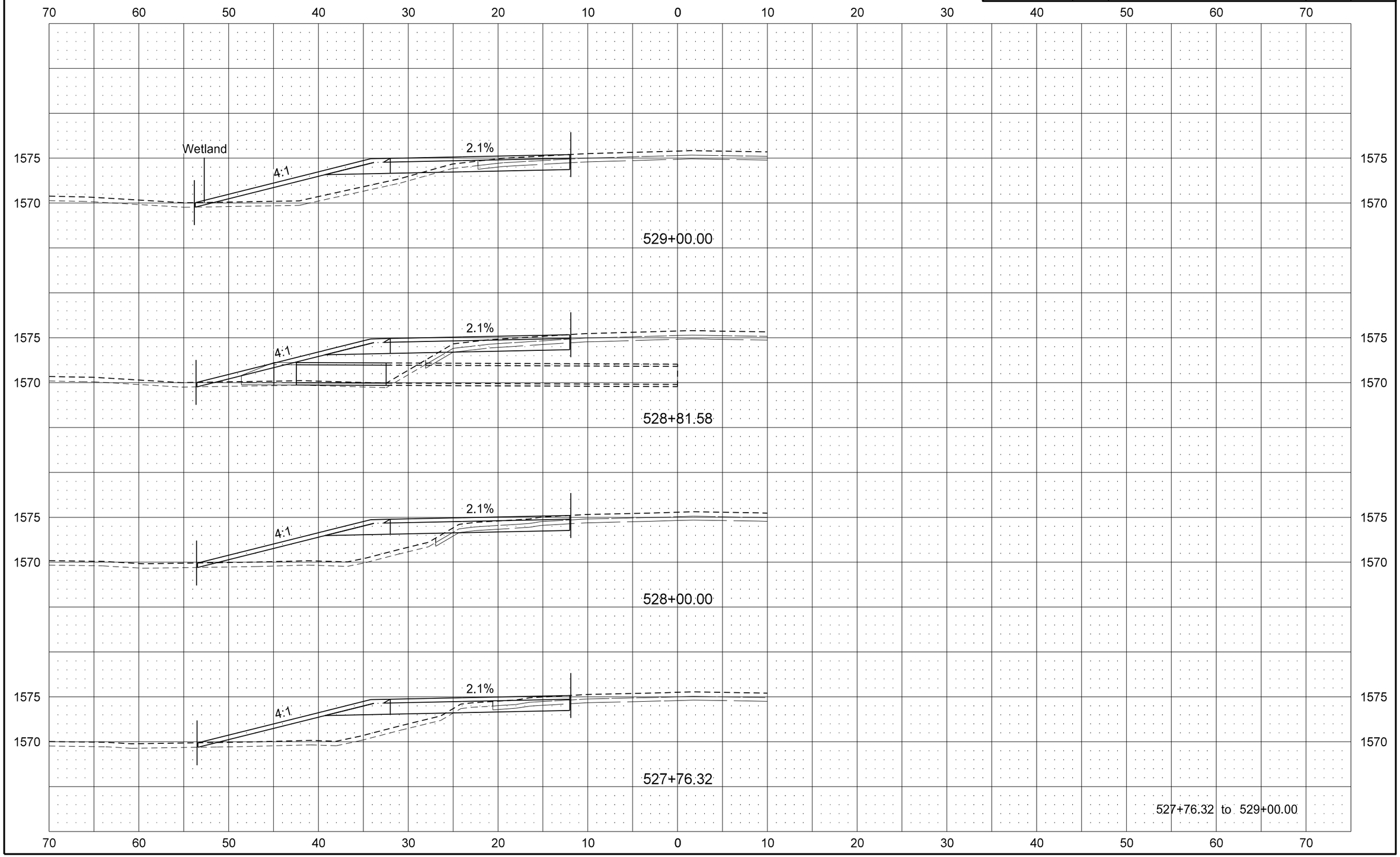

STATE	PROJECT NO.	SECTION NO.	SHEET NO.
ND	SHE-4-083(113)219	200	4

US 83 - Site #1 (RP 226.9)

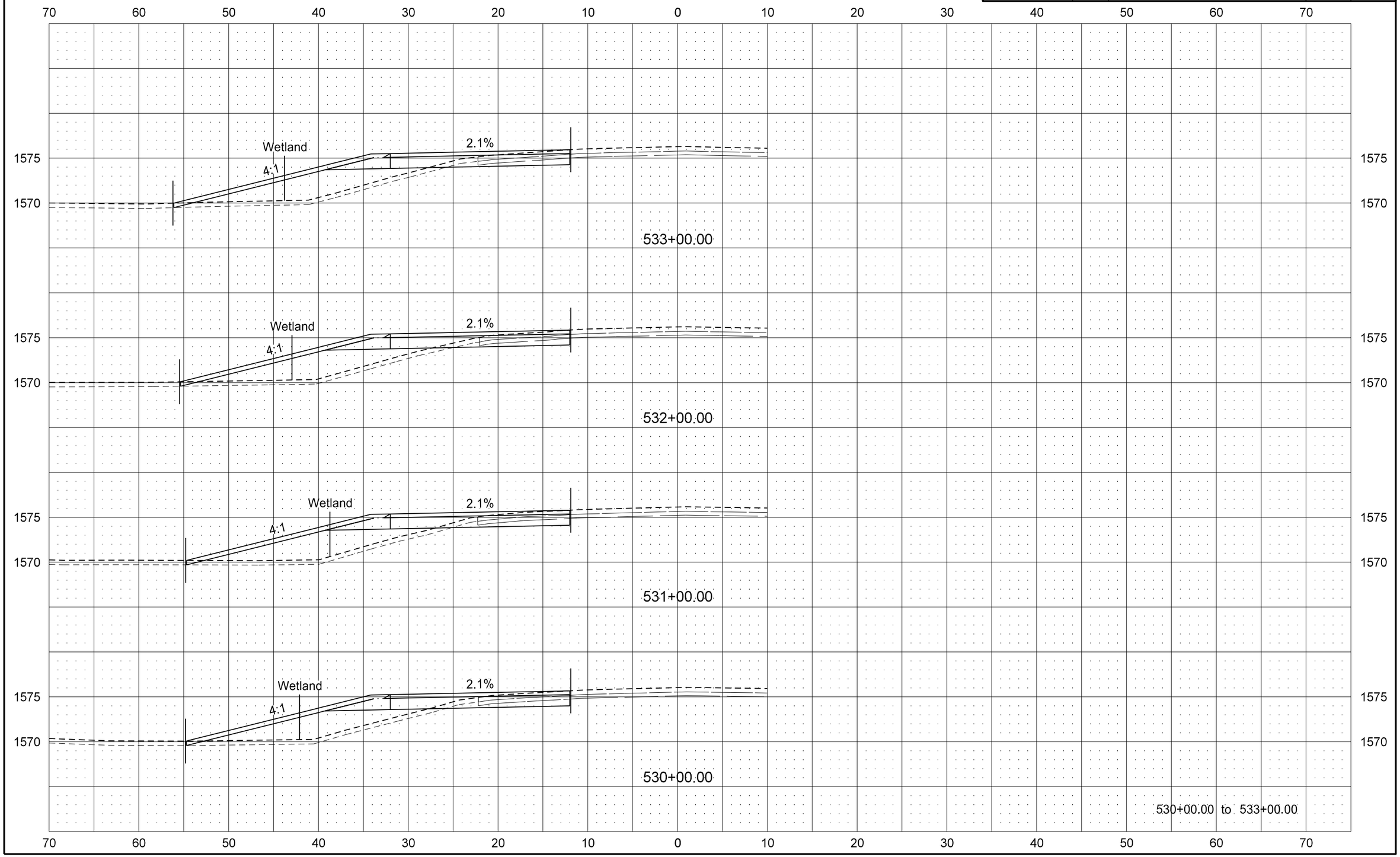

STATE	PROJECT NO.	SECTION NO.	SHEET NO.
ND	SHE-4-083(113)219	200	5

US 83 - Site #1 (RP 226.9)

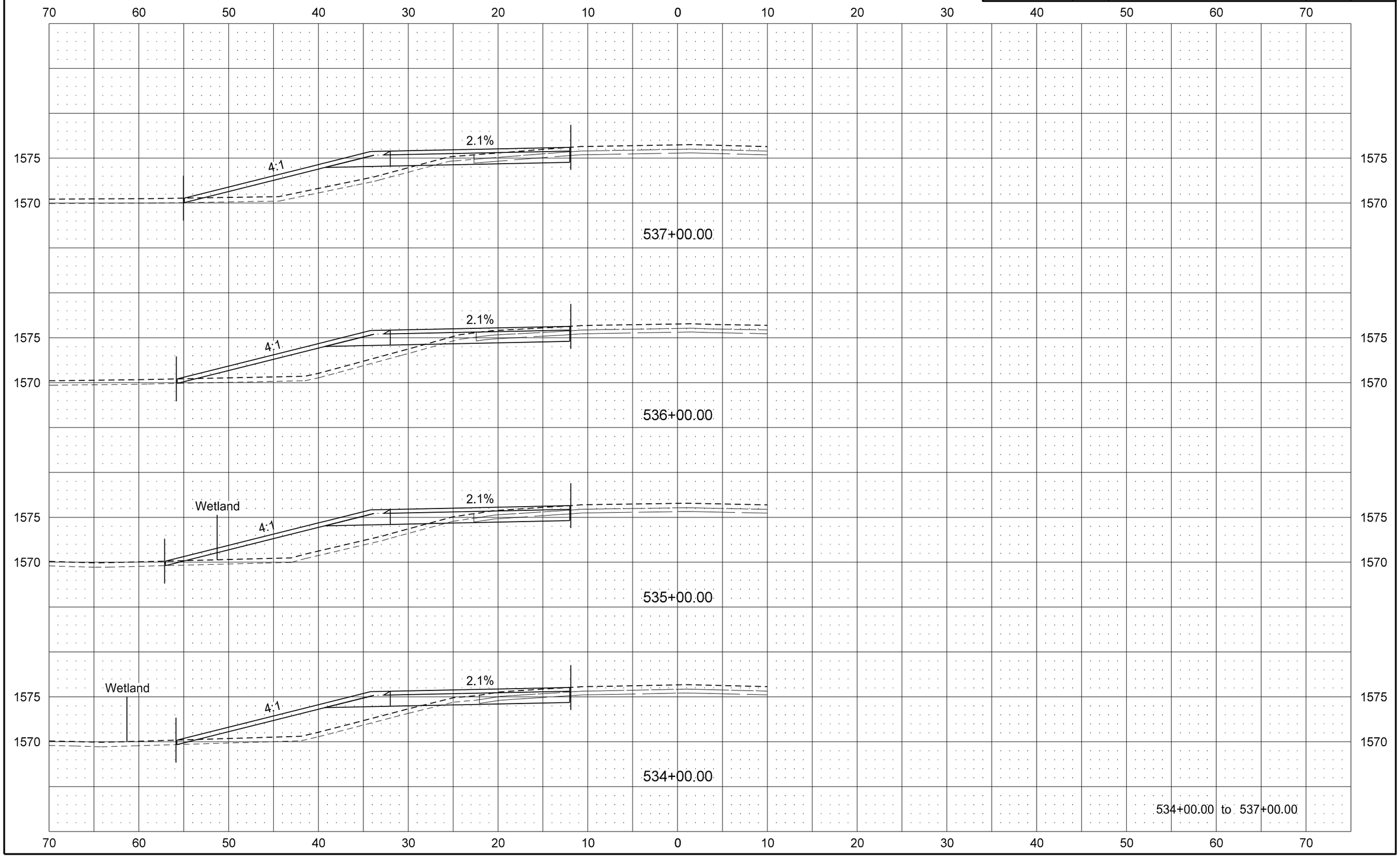

STATE	PROJECT NO.	SECTION NO.	SHEET NO.
ND	SHE-4-083(113)219	200	6

US 83 - Site #1 (RP 226.9)

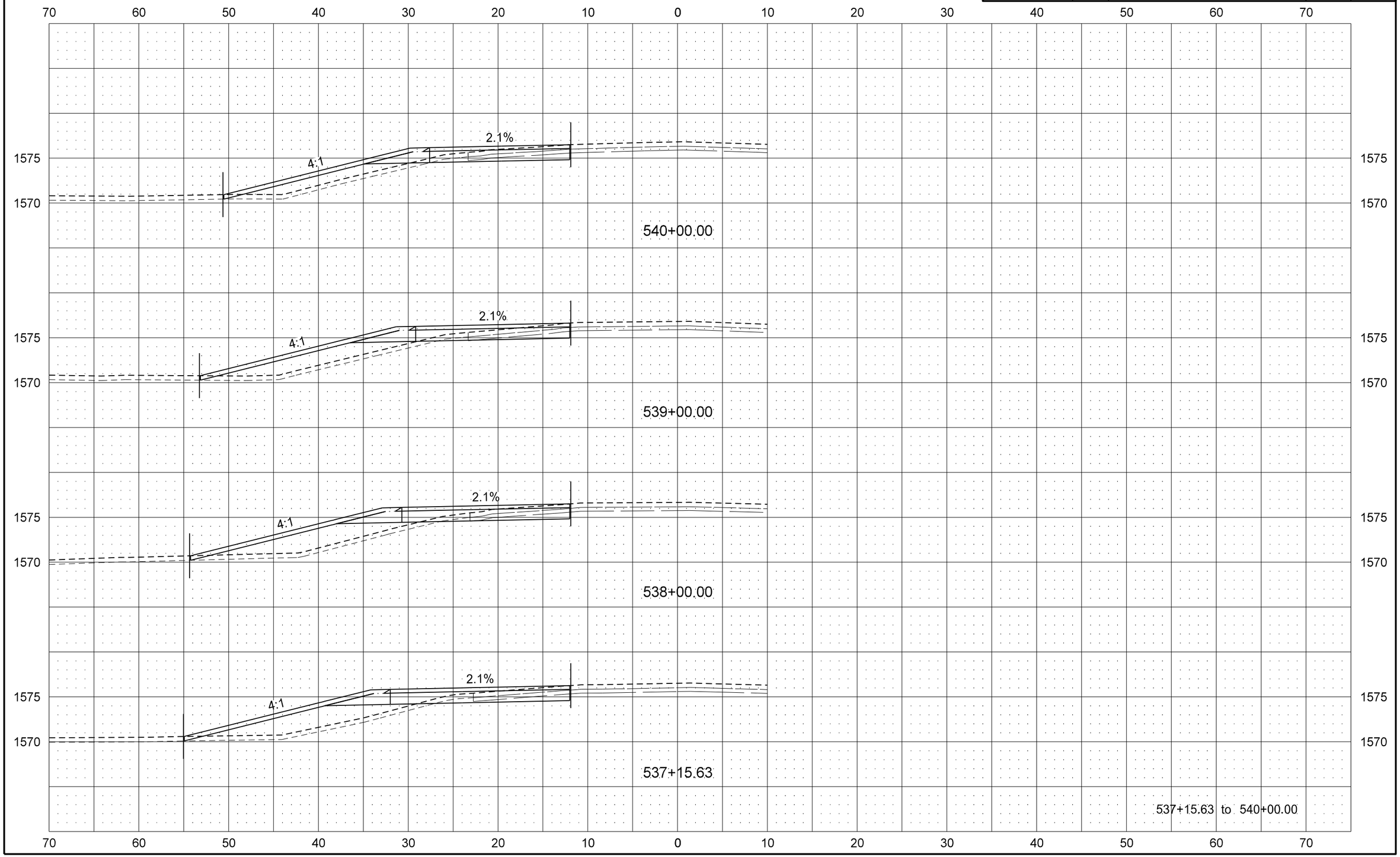

STATE	PROJECT NO.	SECTION NO.	SHEET NO.
ND	SHE-4-083(113)219	200	7

US 83 - Site #1 (RP 226.9)

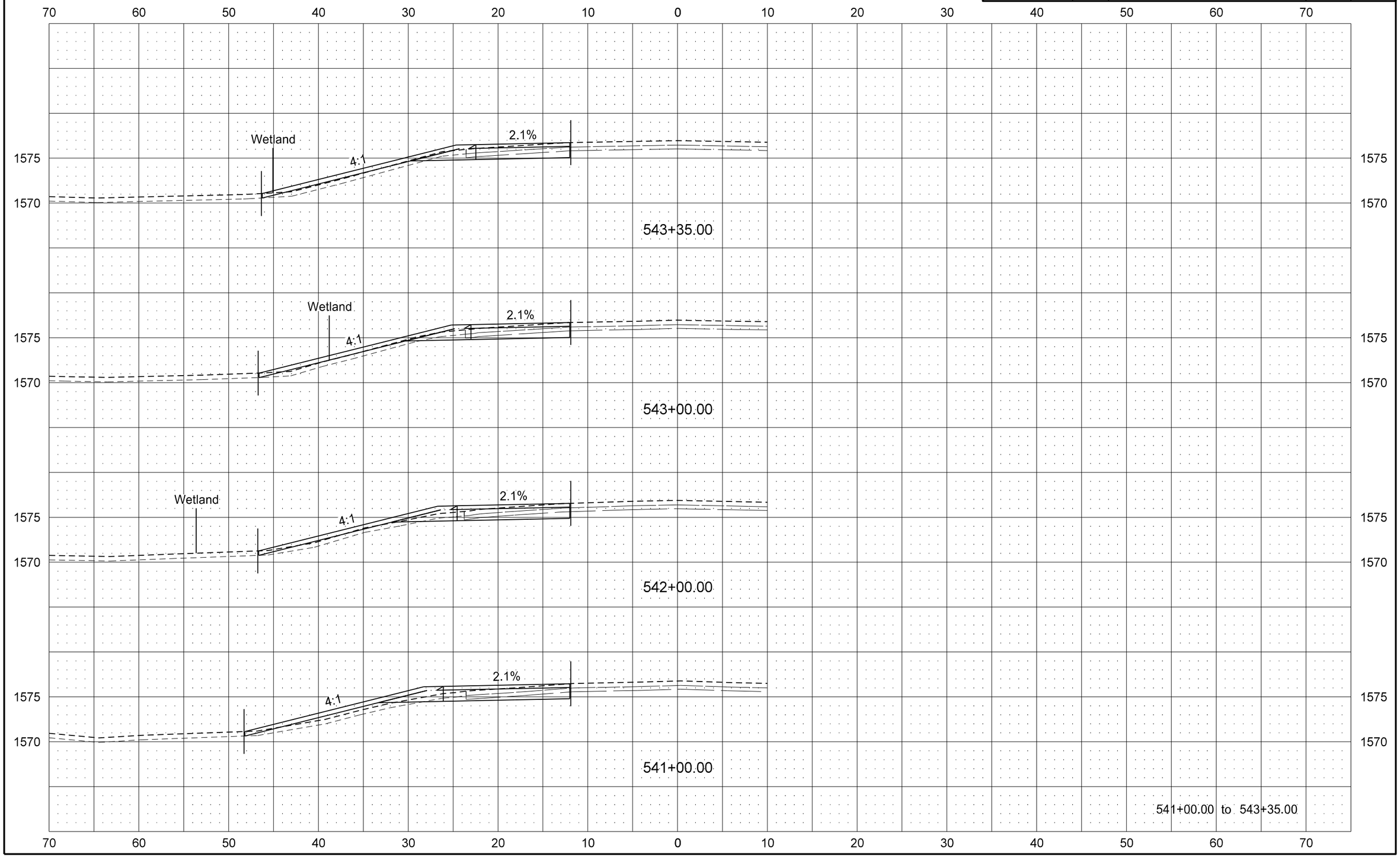

8/4/2015 2:13:54 PM jmwagner R:\project\40083219.113\design\DOTSC\Plan\200XS_001_BOTTINEAU_226.9.dgn

STATE	PROJECT NO.	SECTION NO.	SHEET NO.
ND	SHE-4-083(113)219	200	8

US 83 - Site #2 (RP 223.9)

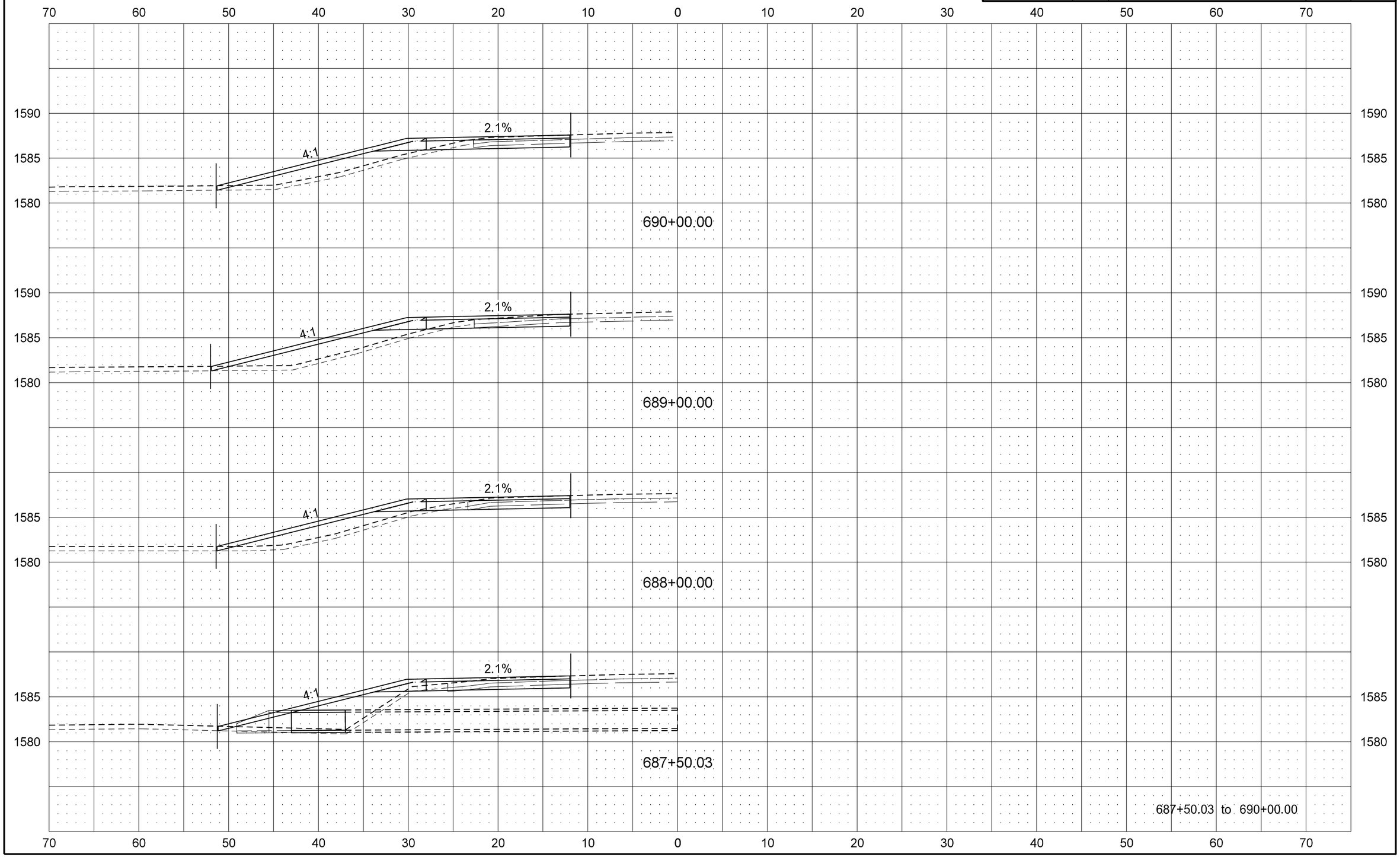

STATE	PROJECT NO.	SECTION NO.	SHEET NO.
ND	SHE-4-083(113)219	200	9

US 83 - Site #2 (RP 223.9)

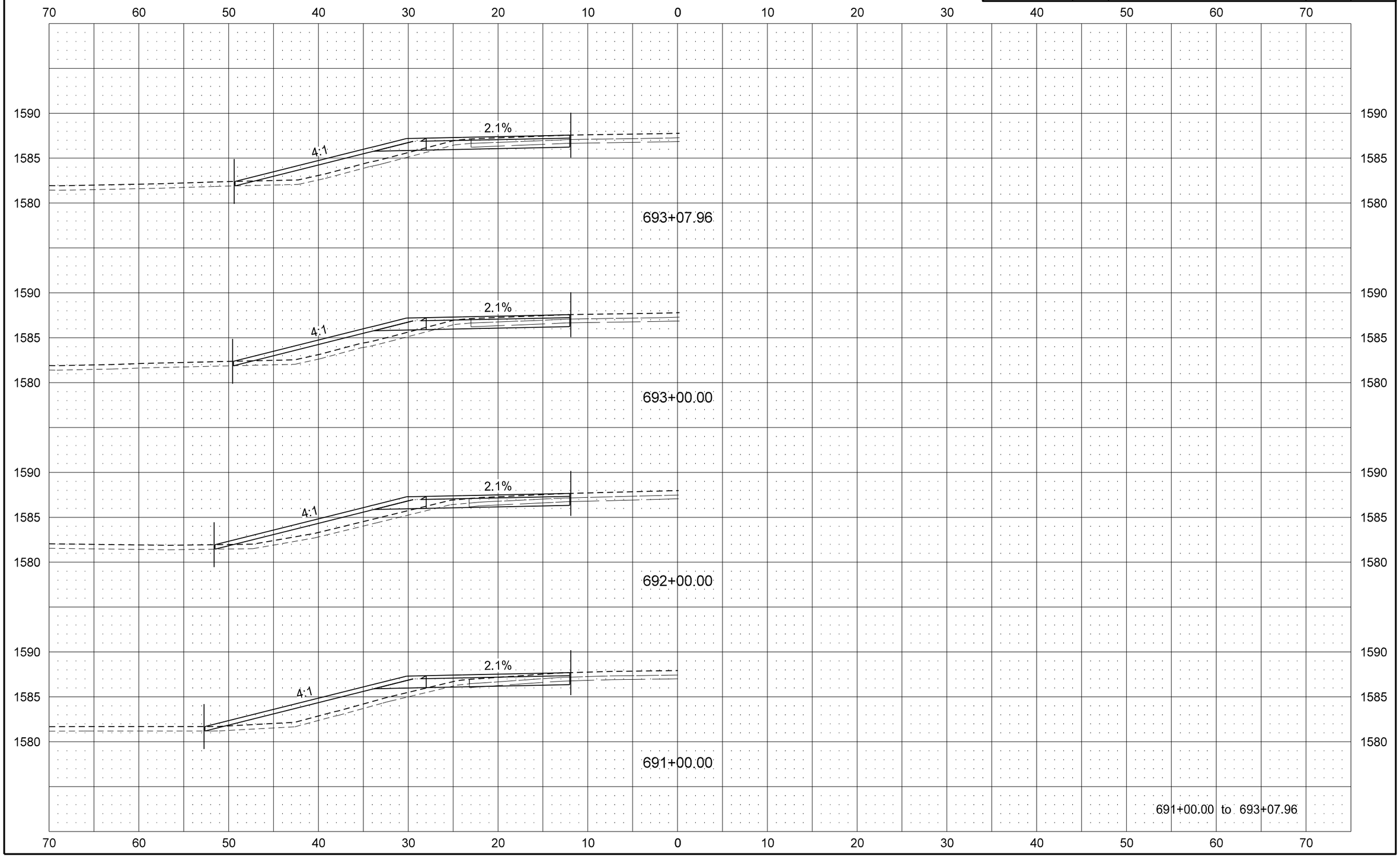

STATE	PROJECT NO.	SECTION NO.	SHEET NO.
ND	SHE-4-083(113)219	200	10

US 83 - Site #2 (RP 223.9)

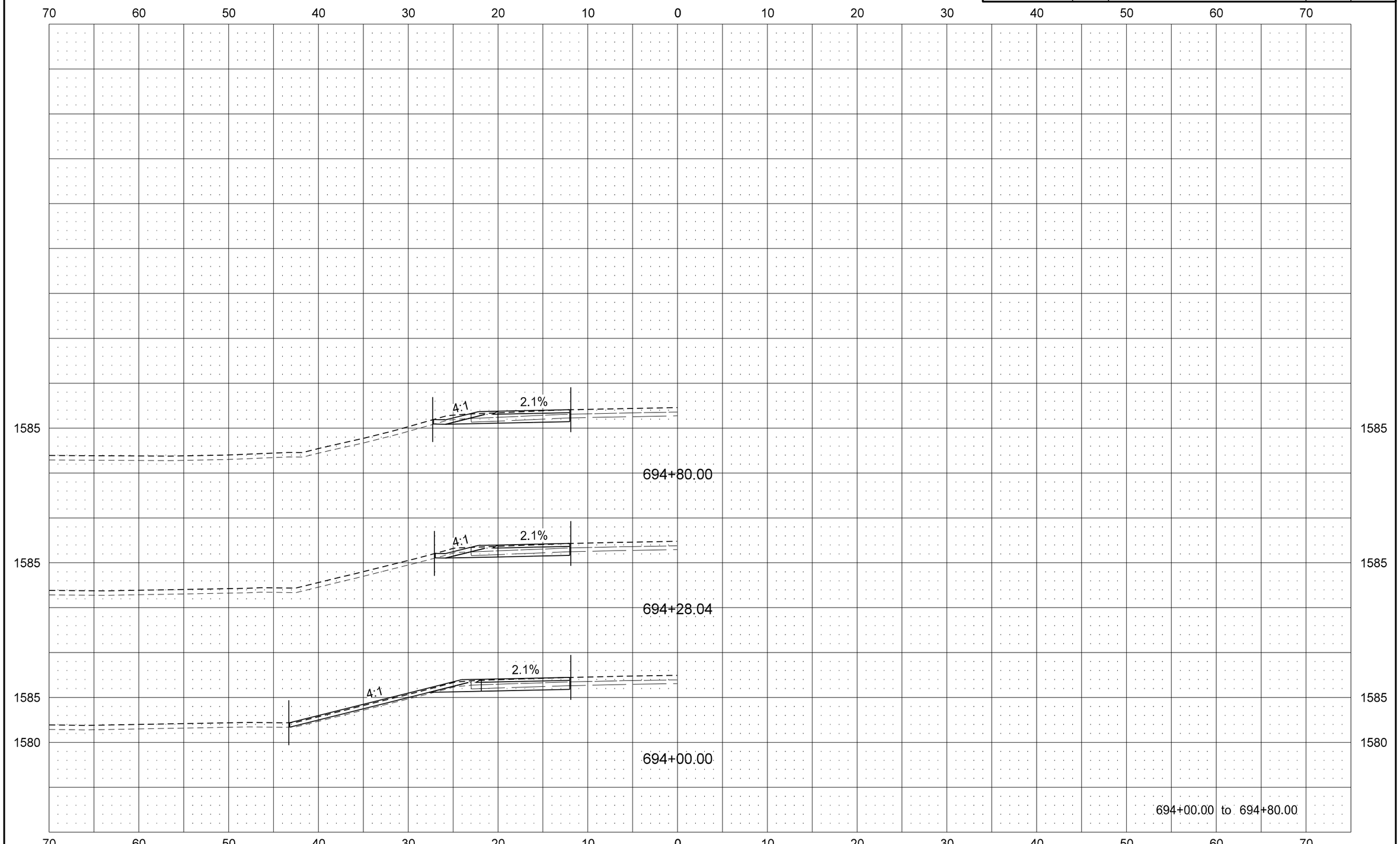

STATE	PROJECT NO.	SECTION NO.	SHEET NO.
ND	SHE-4-083(113)219	200	11

US 83 - Site #3 (RP 218.9)

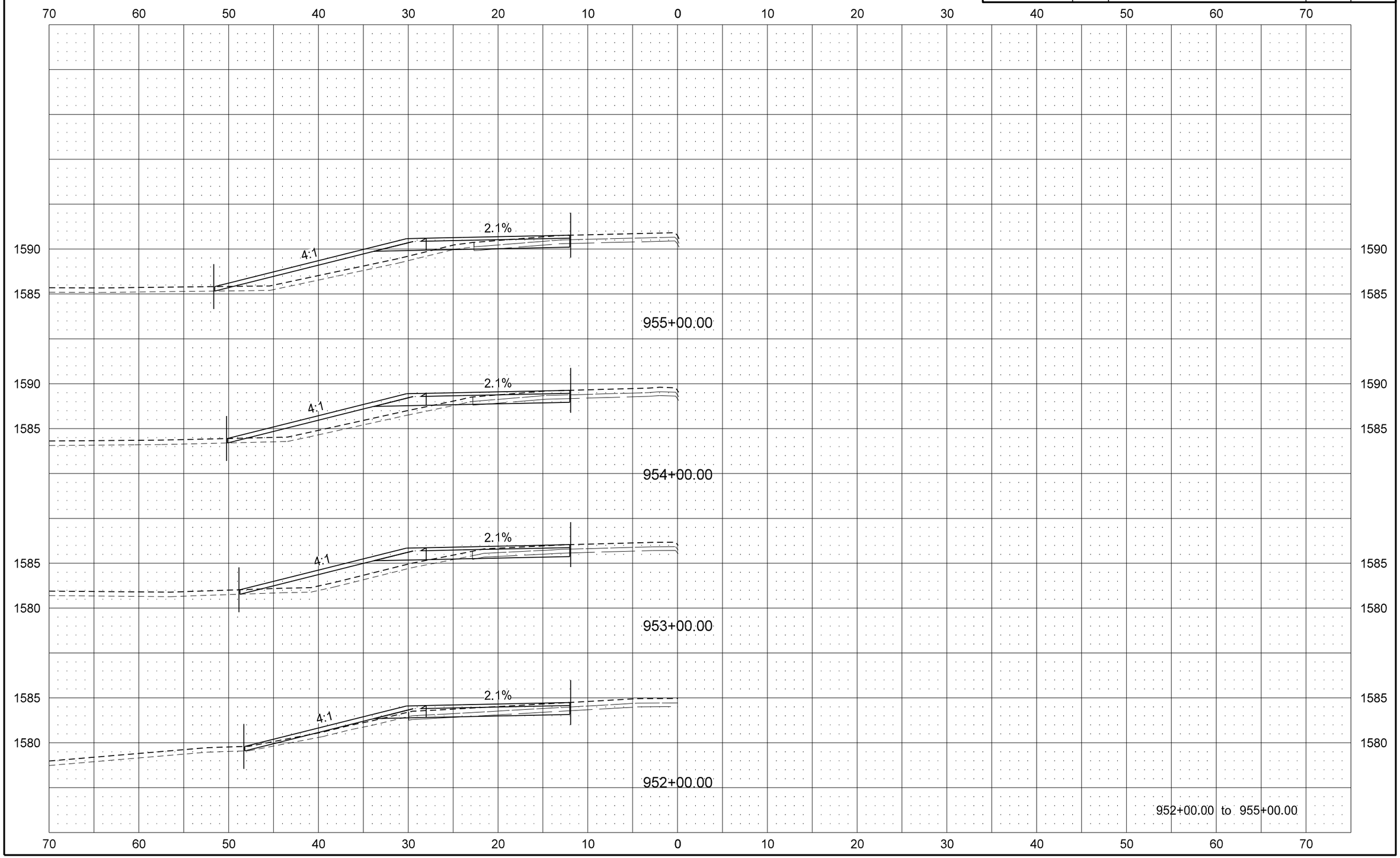

STATE	PROJECT NO.	SECTION NO.	SHEET NO.
ND	SHE-4-083(113)219	200	12

US 83 - Site #3 (RP 218.9)

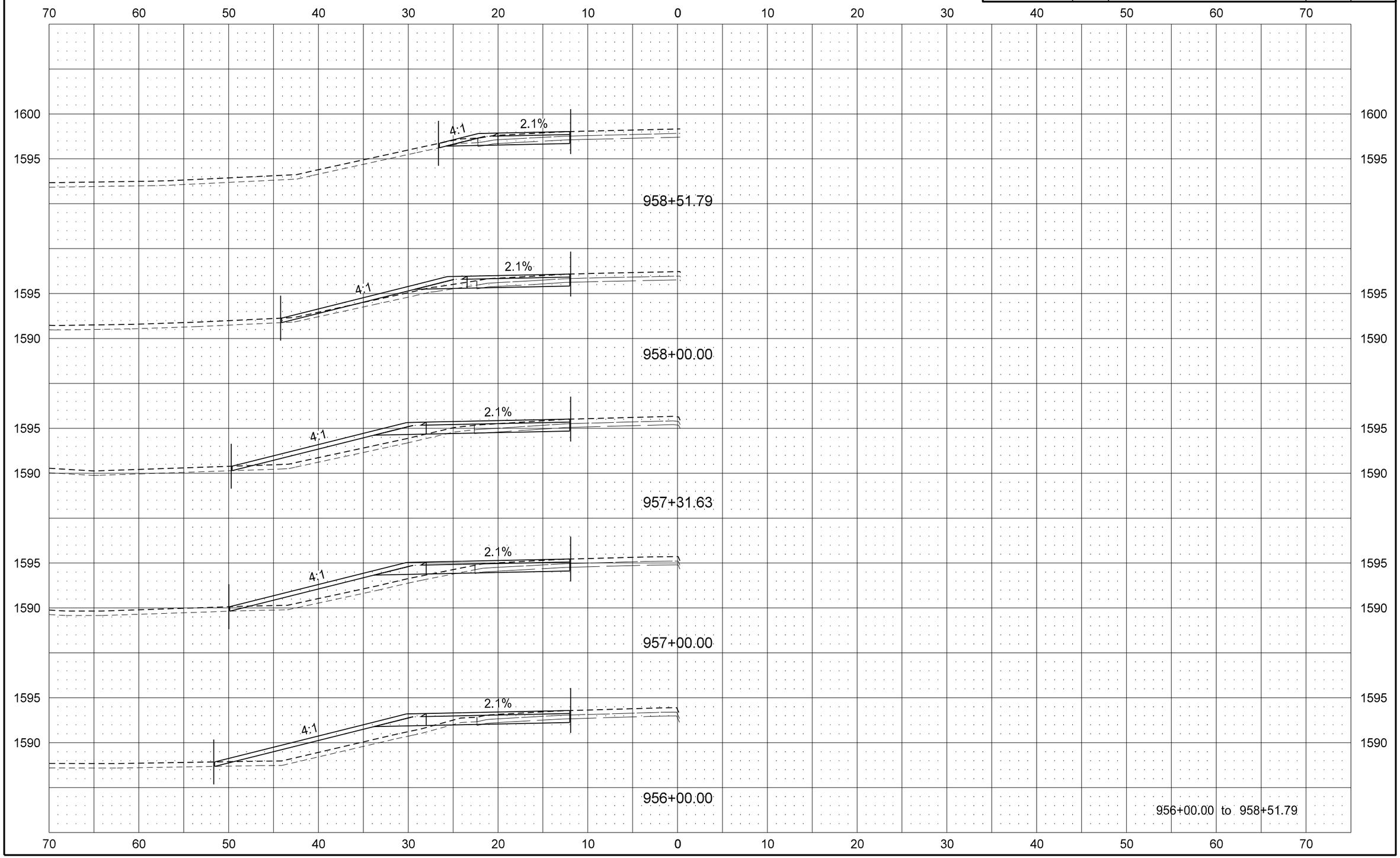

STATE	PROJECT NO.	SECTION NO.	SHEET NO.
ND	SHE-4-083(113)219	200	13

US 83 - Site #3 (RP 218.9)

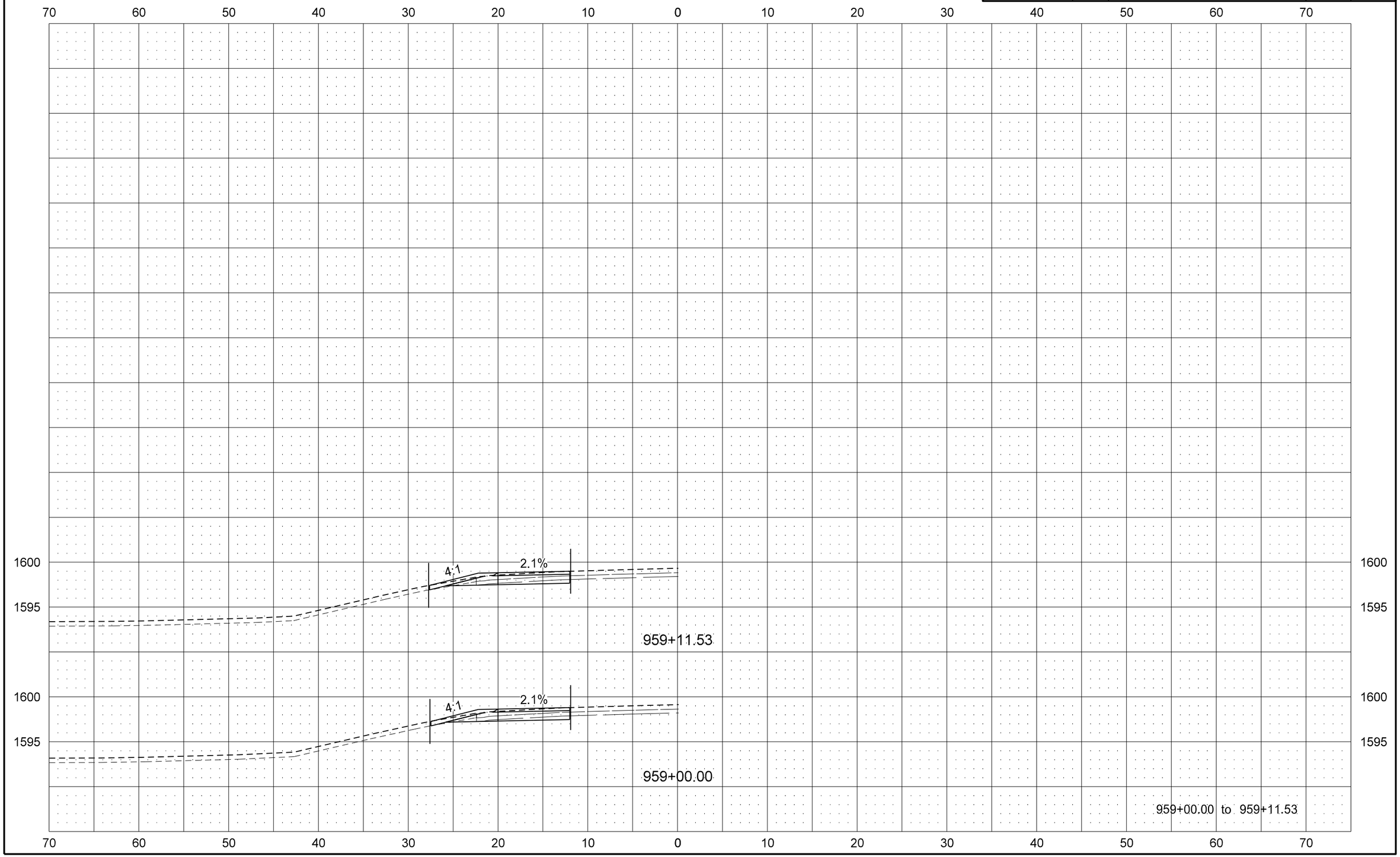

NDDOT ABBREVIATIONS

D-101-1

?	This is a special text character used in the labeling of existing features. It indicates a feature that has an unknown characteristic, potentially based on: lack of description, location accuracy or purpose.
Abn	abandoned
Abut	abutment
Ac	acres
Adj	adjusted
Aggr	aggregate
Ahd	ahead
ARV	air release valve
Align	alignment
Al	alley
Alt	alternate
Alum	aluminum
ADA	Americans with Disabilities Act
A	ampere
&	and
Appr	approach
Approx	approximate
ACP	asbestos cement pipe
Asph	asphalt
AC	asphalt cement
Assmd	assumed
@	at
Atten	attenuation
ATR	automatic traffic recorder
Ave	Avenue
Avg	average
ADT	average daily traffic
Az	azimuth
Bk	back
BF	back face
Bs	backsight
Balc	balcony
B Wire	barbed wire
Barr	barricade
Btry	battery
Brg	bearing
BI	beehive inlet
Beg	begin
BM	bench mark
Bkwy	bikeway
Bit	bituminous
Blk	block
Bd Ft	board feet
BH	bore hole
BS	both sides
Bot	bottom
Blvd	Boulevard
Bndry	boundary
BC	brass cap
Brkwy	breakaway
Br	bridge
Bldg	building
BV	butterfly valve
Byp	bypass
C Gdrl	cable guardrail
Calc	calculate
Cd	candela
CIP	cast iron pipe
CB	catch basin
CRS	cationic rapid setting
C Gd	cattle guard
C To C	center to center
CI or ℄	centerline
Cm	centimeter
Ch	chain
Chnlk	chain-link
Ch Blk	channel block
Ch Ch	channel change
Chk	check
Chsld	chiseled
Cir	circle
Cl	class
Cl	clay
Cl F	clay fill
Cl Hvy	clay heavy
Cl Lm	clay loam
Clnt	clean-out
Clr	clear
Cl&gr	clearing & grubbing
Co S	coal slack
Comb.	combination
Coml	commercial
Compr	compression
CADD	computer aided drafting & design
Conc	concrete
Cond	conductor
Const	construction
Cont	continuous
CSB	continuous split barrel sample
Contr	contraction
Contr	contractor
CP	control point
Coord	coordinate
Cor	corner
Corr	corrected
CAES	corrugated aluminum end section
CAP	corrugated aluminum pipe
CMES	corrugated metal end section
CMP	corrugated metal pipe
CPVCP	corrugated poly-vinyl chloride pipe
CSES	corrugated steel end section
CSP	corrugated steel pipe
C	coulomb
Co	County
Crse	course
C Gr	course gravel
CS	course sand
Ct	Court
Xarm	cross arm
Xbuck	cross buck
Xsec	cross sections
Xing	crossing
Xrd	Crossroad
Crn	crown
CF	cubic feet
M3	cubic meter
M3/s	cubic meters per second
CY	cubic yard
Cy/mi	cubic yards per mile
Culv	culvert
C&G	curb & gutter
CI	curb inlet
CR	curb ramp
CS	curve to spiral
C	cut
Dd Ld	dead load
Defl	deflection
Defm	deformed
Deg or D	degree
Dlnt	delineate
Dlntr	delineator
Depr	depression
Desc	description
Det	detail
DWP	detectable warning panel
Dtr	detour
Dia	diameter
Dir	direction
Dist	distance
DM	disturbed material
DB	ditch block
DG	ditch grade
Dbl	double
Dn	down
Dwg	drawing
Dr	drive
Drwy	driveway
DI	drop inlet
D	dry density
Ea	each
Esmt	easement
E	East
EB	Eastbound
Elast	elastomeric
EL	electric locker
E Mtr	electric meter
Elec	electric/al
EDM	electronic distance meter
Elev or El	elevation
Ellipt	elliptical
Emb	embankment
Emuls	emulsion/emulsified
ES	end section
Engr	engineer
ESS	environmental sensor station
Eq	equal
Eq	equation
Evgr	evergreen
Exc	excavation
Exst	existing
Exp	expansion
Expy	Expressway
E	external of curve
Extru	extruded
FOS	factor of safety
F	Fahrenheit
FS	far side
F	farad
Fed	Federal
FP	feed point
Ft	feet/foot
Fn	fence
Fn P	fence post
FO	fiber optic
FB	field book
FD	field drive
F	fill
FAA	fine aggregate angularity
FS	fine sand
FH	fire hydrant
Fl	flange
Flrd	flared
FES	flared end section
F Bcn	flashing beacon
FA	flight auger sample
FL	flow line
Ftg	footing
FM	force main
Fs	foresight
Fnd	found
Fdn	foundation
Frac	fractional
Frwy	freeway
Frt	front
FF	front face
F Disp	fuel dispenser

NORTH DAKOTA DEPARTMENT OF TRANSPORTATION	
07-01-14	
REVISIONS	
DATE	CHANGE

This document was originally issued and sealed by Roger Weigel, Registration Number PE- 2930, on 07/01/14 and the original document is stored at the North Dakota Department of Transportation

NDDOT ABBREVIATIONS

D-101-2

FFP	fuel filler pipes
FLS	fuel leak sensor
Furn	furnish/ed
Gal	gallon
Galv	galvanized
Gar	garage
Gs L	gas line
G Reg	gas line regulator
GMV	gas main valve
G Mtr	gas meter
GSV	gas service valve
GVP	gas vent pipe
GV	gate valve
Ga	gauge
Geod	geodetic
GIS	Geographical Information System
G	giga
GPS	Global Positioning System
Gov	government
Grd	graded/grade
Gr	gravel
Grnd	ground
GWM	ground water monitor
Gdrl	guardrail
Gtr	gutter
H Plg	H piling
Hdwl	headwall
Ha	hectare
Ht	height
HI	height of instrument
Hel	helical
H	henry
Hz	hertz
HDPE	high density polyethylene
HM	high mast
HP	high pressure
HPS	high pressure sodium
Hwy	highway
Hor	horizontal
HBP	hot bituminous pavement
HMA	hot mix asphalt
Hr	hour(s)
Hyd	hydrant
Ph	hydrogen ion content
Id	identification
In or "	inch
Incl	inclinometer tube
IMH	inlet manhole
ID	inside diameter
Inst	instrument
Intchg	interchange
Intmdt	intermediate
Intscn	intersection
Inv	invert
IM	iron monument

I Pn	Iron Pin
IP	iron Pipe
Jt	joint
J	joule
Jct	junction
K	kelvin
Kn	kilo newton
Kpa	kilo pascal
Kg	kilogram
Kg/m3	kilogram per cubic meter
Km	kilometer
K	Kip(s)
LS	Land Surveyor (licensed)
LSIT	Land Surveyor In Training
Ln	lane
Lg	large
Lat	latitude
Lt	left
L	length of curve
Lens	lenses
Lvl	level
LB	level book
Lvlng	leveling
Lht	light
LP	light pole
Ltg	lighting
Lig Co	lignite coal
Lig Sl	lignite slack
LF	linear foot
Liq	liquid
LL	liquid limit
L	litre
Lm	loam
Loc	location
LC	long chord
Long.	longitude
Lp	loop
LD	loop detector
Lm	lumen
Lum	luminaire
L Sum	lump sum
Lx	lux
ML	main line
M Hr	man hour
MH	manhole
Mkd	marked
Mkr	marker
Mkg	marking
MA	mast arm
Matl	material
Max	maximum
MC	meander corner
Meas	measure
Mdn	median
MD	median drain

MC	medium curing
M	mega
Mer	meridian
M	meter
M/s	meters per second
M	mid ordinate of curve
Mi	mile
MM	mile marker
MP	mile post
Ml	milliliter
Mm	millimeter
Mm/hr	millimeters per hour
Min	minimum
Misc	miscellaneous
Mon	monument
Mnd	mound
Mtbl	mountable
Mtd	mounted
Mtg	mounting
Mk	muck
Mun	municipal
N	nano
NGS	National Geodetic Survey
NS	near side
Neop	neoprene
Ntwk	network
N	newton
N	North
NE	North East
NW	North West
NB	Northbound
No. or #	number
Obsc	obscure(d)
Obsn	observation
Ocpd	occupied
Ocpy	occupy
Off Loc	office location
O/s	offset
OC	on center
C	one dimensional consolidation
OC	organic content
Orig	original
O To O	out to out
OD	outside diameter
OH	overhead
PMT	pad mounted transformer
Pg	pages
Pntd	painted
Pr	pair
Pnl	panel
Pk	park
PK	Parker-Kalon nail
Pa	pascal
PSD	passing sight distance
Pvmt	pavement

Ped	pedestal
Ped	pedestrian
PPP	pedestrian pushbutton post
Pen.	penetration
Perf	perforated
Per.	perimeter
PL	pipeline
Pl	place
P&P	plan & profile
PL	plastic limit
Pl	plate
Pt	point
PCC	point of compound curve
PC	point of curve
PI	point of intersection
PRC	point of reverse curvature
PT	point of tangent
POC	point on curve
POT	point on tangent
PE	polyethylene
PVC	polyvinyl chloride
PCC	Portland Cement concrete
Lb or #	pounds
PP	power pole
Preempt	preemption
Prefab	prefabricated
Prfmd	preformed
Prep	preperation
Press.	pressure
PRV	pressure relief valve
Prestr	prestressed
Pvt	private
PD	private drive
Prod.	production/produce
Prog	programmed
Prop.	property
Prop Ln	property line
Ppsd	proposed
PB	pull box

NORTH DAKOTA
DEPARTMENT OF TRANSPORTATION

07-01-14

REVISIONS

DATE	CHANGE
08-03-15	General Revisions

This document was originally issued and sealed by Roger Weigel, Registration Number PE- 2930, on 08/03/15 and the original document is stored at the North Dakota Department of Transportation

NDDOT ABBREVIATIONS

D-101-3

Qty	quantity
Qtr	quarter
Rad or R	radius
RR	railroad
Rlwy	railway
Rsd	raised
RTP	random traverse point
Rge or R	range
RC	rapid curing
Rec	record
Rcy	recycle
RAP	recycled asphalt pavement
RPCC	recycled portland cement concrete
Ref	reference
R Mkr	reference marker
RM	reference monument
Refl	reflectorized
RCB	reinforced concrete box
RCES	reinforced concrete end section
RCP	reinforced concrete pipe
RCPS	reinforced concrete pipe sewer
Reinf	reinforcement
Res	reservation
Ret	retaining
Rev	reverse
Rt	right
R/W	right of way
Riv	river
Rd	road
Rdbd	road bed
Rdwy	roadway
RWIS	roadway weather information system
Rk	rock
Rt	route
Salv	salvage(d)
Sd	sand
Sdy Cl	sandy clay
Sdy Cl Lm	sandy clay loam
Sdy Fl	sandy fill
Sdy Lm	sandy loam
San	sanitary sewer line
Sc	scoria
Sec	seconds
Sec	section
SL	section line
Sep	separation
Seq	sequence
Serv	service
Sh	shale
Sht	sheet
Shtng	sheeting
Shldr	shoulder
Sw	sidewalk
S	siemens
SD	sight distance
SN	sign number
Sig	signal
Si Cl	silt clay
Si Cl Lm	silty clay loam
Si Lm	silty loam
Sgl	single
SC	slow curing
SS	slow setting
Sm	small
S	South
SE	South East
SW	South West
SB	Southbound
Sp	spaces
Spcl	special
SA	special assembly
SP	special provisions
G	specific gravity
Spk	spike
SC	spiral to curve
ST	spiral to tangent
SB	split barrel sample
SH	sprinkler head
SV	sprinkler valve
Sq	square
SF	square feet
Km2	square kilometer
M2	square meter
SY	square yard
Stk	stake
Std	standard
N	standard penetration test
Std Specs	standard specifications
Sta	station
Sta Yd	station yards
Stm L	steam line
SEC	steel encased concrete
SMA	stone matrix asphalt
SSD	stopping sight distance
SD	storm drain
St	street
SPP	structural plate pipe
SPPA	structural plate pipe arch
Str	structure
Subd	subdivision
Sub	subgrade
Sub Prep	subgrade preperation
Ss	subsoil
SE	superelevation
SS	supplement specification
Supp	supplemental
Surf	surfacing
Surv	survey
Sym	symmetrical
SI	systems international
Tan	tangent
T	tangent (semi)
TS	tangent to spiral
Tel	telephone
Tel B	Telephone Booth
Tel P	telephone pole
Tv	television
Temp	temperature
Temp	temporary
TBM	temporary bench mark
T	tesla
T	thinwall tube sample
T/mi	tons per mile
Ts	topsoil
Twp or T	township
Traf	traffic
TSCB	traffic signal control box
Tr	trail
Transf	transformer
TB	transit book
Trans	transition
TT	transmission tower
Trans	transverse
Trav	traverse
TP	traverse point
Trtd	treated
Trmt	treatment
Qc	triaxial compression
TERO	tribal employment rights ordinance
Tpl	triple
TP	turning point
Typ	typical
Qu	unconfined compressive strength
Ugrnd	underground
USC&G	US Coast & Geodetic Survey
USGS	US Geologic Survey
Util	utility
VG	valley gutter
Vap	vapor
Vert	vertical
VC	vertical curve
VCP	vitrified clay pipe
V	volt
Vol	volume
Wkwy	walkway
W	water content
WGV	water gate valve
WL	water line
WM	water main
WMV	water main valve
W Mtr	water meter
WSV	water service valve
WW	water well
W	watt
Wrng	wearing
Wb	weber
WIM	weigh in motion
W	west
WB	westbound
Wrng	wiring
W/	with
W/o	without
WC	witness corner
WGS	world geodetic system
Z	zenith

NORTH DAKOTA DEPARTMENT OF TRANSPORTATION	
07-01-14	
REVISIONS	
DATE	CHANGE
08-03-15	General Revisions

This document was originally issued and sealed by Roger Weigel, Registration Number PE- 2930, on 08/03/15 and the original document is stored at the North Dakota Department of Transportation

NDDOT UTILITY COMPANY AND ORGANIZATION ABBREVIATIONS

D-101-10

702COM	702 Communications
ACCENT	Accent Communications
AGASSIZ WU	Agassiz Water Users Incorporated
AGC	Assiociated General Contractors of America
All Pl	Alliance Pipeline
ALL SEAS WU	All Seasons Water Users Association
AMOCO Pl	Amoco Pipeline Company
AMRDA HESS	Amerada Hess Corporation
AT&T	AT&T Corporation
B PAW	Bear Paw Energy Incorporated
BAKER ELEC	Baker Electric
BASIN ELEC	Basin Electric Cooperative Incorporated
BEK TEL	Bek Communications Cooperative
BELLE PL	Belle Fourche Pipeline Company
BLM	Bureau of Land Management
BNSF	Burlington Northern Santa Fe Railway
BOEING	Boeing
BRNS RWD	Barnes Rural Water District
BURK-DIV ELEC	Burke-Divide Electric Cooperative
BURL WU	Burleigh Water Users
Cable One	Cable One
CABLE SERV	Cable Services
CAP ELEC	Capital Electric Cooperative Incorporat
CASS CO ELEC	Cass County Electric Cooperative
CASS RWU	Cass Rural Water Users Incorporated
CAV ELEC	Cavalier Rural Electric Cooperative
CBLCOM	Cablecom Of Fargo
CENEX PL	Cenex Pipeline
CENT PL WATER DIST	Central Pipe Line Water District
CENT PWR ELEC	Central Power Electric Cooperative
COE	Corps of Engineers
CONS TEL	Consolidated Telephone
CONT RES	Continental Resource Inc
CPR	Canadian Pacific Railway
D O E	Department Of Energy
DAK CARR	Dakota Carrier Network
DAK CENT TEL	Dakota Central Telephone
DAK RWD	Dakota Rural Water District
DGC	Dakota Gasification Company
DICKEY R NET	Dickey Rural Networks
DICKEY RWU	Dickey Rural Water Users Association
DICKEY TEL	Dickey Telephone
DNRR	Dakota Northern Railroad
DOME PL	Dome Pipeline Company
DVELEC	Dakota Valley Electric Cooperative
DVMW	Dakota, Missouri Valley & Western
ENBRDG	Enbridge Pipelines Incorporated
ENVENTIS	Enventis Telephone
FALK MNG	Falkirk Mining Company
FHWA	Federal Highway Administration
G FKS-TRL WD	Grand Forks-traill Water District
GETTY TRD & TRAN	Getty Trading & Transportation
GLDN W ELEC	Golden West Electric Cooperative
GRGS CO TEL	Griggs County Telephone
GT PLNS NAT GAS	Great Plains Natural Gas Company
HALS TEL	Halstad Telephone Company
IDEA1	Idea1
INT-COMM TEL	Inter-Community Telephone Company
KANEB PL	Kaneb Pipeline Company
KEM ELEC	Kem Electric Cooperative Incorporated
KOCH GATH SYS	Koch Gathering Systems Incorporated
LKHD PL	Lakehead Pipeline Company
LNGDN RWU	Langdon Rural Water Users Incorporated
LWR YELL R ELEC	Lower Yellowstone Rural Electric
MCKNZ CON	McKenzie Consolidated Telcom
MCKNZ ELEC	McKenzie Electric Cooperative
MCKNZ WRD	McKenzie County Water Resource District
MCLEOD	McLeod USA
MCLN ELEC	McLean Electric Cooperative
MCLN-SHRDN R WAT	McLean-Sheridan Rural Water
MDU	Montana-dakota Utilities
MID-CONT CABLE	Mid-Continent Cable
MIDSTATE TEL	Midstate Telephone Company
MINOT CABLE	Minot Cable Television
MINOT TEL	Minot Telephone Company
MISS W W S	Missouri West Water System
MNKOTA PWR	Minnkota Power
MOR-GRAN-SOU ELEC	Mor-gran-sou Electric Cooperative
MOUNT-WILLI ELEC	Mountrail-williams Electric Cooperative
MRE LBTY TEL	Moore & Liberty Telephone
MUNICIPAL	City Water And Sewer
MUNICIPAL	City Of '.....'
N CENT ELEC	North Central Electric Cooperative
N VALL W DIST	North Valley Water District
ND PKS & REC	North Dakota Parks And Recreation
ND TEL	North Dakota Telephone Company
NDDOT	North Dakota Department of Transportation
NDSU SOIL SCI DEPT	NDSU Soil Science Department
NEMONT TEL	Nemont Telephone
NODAK R ELEC	Nodak Rural Electric Cooperative
NOON FRMS TEL	Noonan Farmers Telephone Company
NPR	Northern Plains Railroad
NSP	Northern States Power
NTH PRAIR RW	Northern Prairie Rural Water Association
NTHN BRDR PL	Northern Border Pipeline
NTHN PLNS ELEC	Northern Plains Electric Cooperative Incorporated
NTHWSTRN REF	Northwestern Refinery Company
NW COMM	Northwest Communication Cooperation
ONEOK	Oneok gas
OSHA	Occupational Safety and Health Administration
OTTR TL PWR	Otter Tail Power Company
P L E M	Prairielands Energy Marketing
POLAR COM	Polar Communications
PVT ELEC	Private Electric
QWEST	Qwest Communications
R&T W SUPPLY	R & T Water Supply Association
RAMSEY R SEW	Ramsey Rural Sewer Association
RAMSEY RW	Ramsey Rural Water Association
RAMSEY UTIL	Ramsey County Rural Utilities
RED RIV TEL	Red River Rural Telephone
RESVTN TEL	Reservation Telephone
ROBRTS TEL	Roberts Company Telephone
R-RIDER ELEC	Roughrider Electric Coop
RRVW	Red River Valley & Western Railroad
RSR ELEC	R.S.R. Electric Cooperative
S E W U	South East Water Users Incorporated
SCOTT CABLE	Scott Cable Television Dickinson
SHERDN ELEC	Sheridan Electric Cooperative
SHEYN VLY ELEC	Sheyenne Valley Electric Cooperative
SKYTECH	Skyland Technologies Incorporated
SLOPE ELEC	Slope Electric Cooperative Incorporated
SOURIS RIV TELCOM	Souris River Telecommunications
ST WAT COMM	State Water Commission
STATE LN WATER	State Line Water Cooperative
STER ENG	Sterling Energy
STUT RWU	Stutsman Rural Water Users
SW PL PRJ	Southwest Pipeline Project
T M C	Turtle Mountain Communications
TCI	TCI of North Dakota
TESORO HGH PLNS PL	Tesoro High Plains Pipeline
TRI-CNTY WU	Tri-County Water Users Incorporated
TRL CO RWU	Traill County Rural Water Users
UNTD TEL	United Telephone
UPPR SOUR WUA	Upper Souris Water Users Association
US SPRINT	U.S. Sprint
USAF MSL CABLE	U.S.A.F. Missile Cable
USFWS	US Fish and Wildlife Service
USW COMM	U.S. West Communications
VRNDRY ELEC	Verendrye Electric Cooperative
W RIV TEL	West River Telephone Incorporated
WEB	W. E. B. Water Development Association
WILLI RWA	Williams Rural Water Association
WILSTN BAS PL	Williston Basin Interstate Pipeline Company
WLSH RWD	Walsh Water Rural Water District
WOLVRTN TEL	Wolverton Telephone
XLENER	Xcel Energy
YSVR	Yellowstone Valley Railroad

NORTH DAKOTA DEPARTMENT OF TRANSPORTATION	
07-01-14	
REVISIONS	
DATE	CHANGE

This document was originally issued and sealed by Roger Weigel, Registration Number PE- 2930, on 07/01/14 and the original document is stored at the North Dakota Department of Transportation

D-101-20

Line Styles

- Limits of Const Transition Line
- Bale Check
- Rock Check
- Sight Distance Triangle Line
- Small Hidden Object
- Dimension Leader
- Existing Ground
- Existing Topsoil (Cross Section View)
- Large Hidden Object
- Edge Drain
- D — Geotextile Fabric Type D
- E — Existing Electrical
- FO — Existing Fiber Optic Line
- FO — Existing TV Fiber Optic
- G — Existing Gas Pipe
- Geo — Geogrid
- OH — Existing Overhead Utility Line
- P — Existing Power
- PL — Existing Fuel Pipeline
- PL — Existing Undefined Above Ground Pipe Line
- R — Geotextile Fabric Type R
- R — Geotextile Fabric Type R1
- REMOVE — Remove Line
- RR — Geotextile Fabric Type RR
- S — Geotextile Fabric Type S
- S — Floating Silt Curtain
- T — Existing Telephone Line
- TV — Existing TV Line
- Void — Existing Assumed Ground (Not Surveyed)
- Void — Tentative Ground Line
- W — Existing Water or Steam Line
- Existing Under Drain
- Under Drain
- Wall
- Existing Slotted Drain
- Existing Cemetary Boundary
- Centerline Pavement Marking
- Barrier with Centerline Pavement Marking
- Barrier Pavement Marking
- Stripe 4 IN Dotted Extension White
- Stripe 8 IN Dotted Extension White
- Stripe 8 IN Lane Drop
- Wetland Mitigation
- Existing Box Culvert Bridge
- Existing Concrete Surface
- Existing Drainage Structure
- Easement
- Existing Concrete
- Existing Easement
- Existing Gravel Surface
- Existing Aggregate (Cross Section View)
- Existing Curb and Gutter (Cross Section View)
- Existing Riprap
- Existing Underground Vault or Lift Station
- Tangent Line
- Hidden Object
- Existing Dirt Surface
- Existing Conduit
- Topsoil Profile
- Existing Conductor
- Conductor
- Fiber Optic
- Existing Loop Detector
- Subgrade, Subcut or Ditch Grade
- Existing Asphalt Surface
- Existing Asphalt (Cross Section View)
- Existing Reinforcement Rebar
- Existing Tie Point Line
- Existing State or International Line
- Existing Quarter Section Line
- Existing County
- Existing Section Line
- Existing Township
- Existing Railroad Centerline
- Centerline
- Existing Centerline
- Supplemental Contour
- Right of Way
- Existing Right of Way
- Existing Right of Way Railroad
- Failure Line
- Existing Conditions
- Existing Ground (Details)
- Existing Sixteenth Section Line
- Existing Right of Way Not State Owned
- Phantom Object
- Centerline Main
- Existing Guardrail Cable
- Existing Guardrail Metal
- Existing Edge of Water
- Excavation Limits
- Existing Government Lot Line
- Existing Adjacent Block Lines
- Existing Adjacent Lot Lines
- Existing Adjacent Property Line
- Existing Adjacent Subdivision Lines

NORTH DAKOTA DEPARTMENT OF TRANSPORTATION	
07-01-14	
REVISIONS	
DATE	CHANGE

This document was originally issued and sealed by Roger Weigel, Registration Number PE- 2930, on 07/01/14 and the original document is stored at the North Dakota Department of Transportation

D-101-21

Line Styles

- Subgrade Reinforcement
- Existing Down Guy Wire Down Guy
- Existing Fence
- Existing Railroad
- Existing Sanitary Sewer
- Existing Sanitary Force Main
- Existing Storm Drain
- Existing Storm Drain Force Main
- Fence
- Silt Fence
- Existing Field Line
- Exst Flow
- Flow
- Existing Culvert
- Existing Curb
- Existing Valley Gutter
- Existing Driveway Gutter
- Existing Curb and Gutter
- Existing Mountable Curb and Gutter
- Existing Double Micro Loop Detector
- Micro Loop Detector Double
- Existing Overhead Sign Structure
- Existing Micro Loop Detector
- Micro Loop Detector
- Existing Overhead Sign Structure Cantilever
- Existing Railroad Switch
- Overhead Sign Structure Cantilever
- 24 Inch Pipe
- Reinforced Concrete Pipe
- Signal Head with Mast Arm
- Existing Signal Head with Mast Arm
- Tie Bar at Random Spacing
- 3-Cable w Posts
- Existing 3-Cable w Posts
- Site Boundary
- Fiber Rolls
- Doweled Joint
- Tie Bar 30 Inch 4 Foot Center to Center
- Tie Bar 18 Inch 3 Foot Center to Center
- Existing Berm, Dike, Pit, or Earth Dam
- Existing Ditch Block
- Depression Contours
- Existing City Corporate Limits or Reservation Boundary
- Gravel Pit - Borrow Area
- Existing Tree Boundary
- Tree Row
- Existing Brush or Shrub Boundary
- Existing Retaining Wall
- Existing Planter or Wall
- Retaining Wall (Plan View)
- Sheet Piling
- W-Beam w Posts
- Existing W-Beam Guardrail with Posts
- Exst Wet Area-Vegetation Break
- Existing Wetland Delineated

NORTH DAKOTA DEPARTMENT OF TRANSPORTATION	
07-01-14	
REVISIONS	
DATE	CHANGE

This document was originally issued and sealed by Roger Weigel, Registration Number PE- 2930, on 07/01/14 and the original document is stored at the North Dakota Department of Transportation

Symbols

D-101-30

- North Arrow (Half Scale)
- Truck Mounted Attenuator
- Type I Barricade
- Type II Barricade
- Type III Barricade
- Catch Basin
- Cairn or Stone Circle
- Video Detection Camera
- Storm Drain Cap or Stub
- Corrugated Metal End Section 18 Inch
- Corrugated Metal End Section 24 Inch
- Corrugated Metal End Section 30 Inch
- Corrugated Metal End Section 36 Inch
- Corrugated Metal End Section 42 Inch
- Corrugated Metal End Section 48 Inch
- Concrete Foundation
- Ground Connection Conductor
- Neutral Connection Conductor
- Phase 1 Connection Conductor
- Phase 2 Connection Conductor
- Traffic Cone
- Signal Controller
- Pad Mounted Signal Controller
- Alignment Data Point
- Emergency Vehicle Detector
- Attenuation Device
- Diamond Grade Delineator Type A
- Diamond Grade Delineator Type B
- Diamond Grade Delineator Type C
- Diamond Grade Delineator Type D
- Diamond Grade Delineator Type E
- Flexible Delineator
- Flexible Delineator Type A
- Flexible Delineator Type B
- Flexible Delineator Type C
- Flexible Delineator Type D
- Flexible Delineator Type E
- Delineator Type A
- Delineator Type A Reset
- Delineator Type B
- Delineator Type B Reset
- Delineator Type C
- Delineator Type D
- Delineator Type E
- Delineator Drums
- Spot Elevation
- Existing Access Control Arrow
- Existing Artifact
- Existing Flashing Beacon
- Existing Benchmark
- Existing Railroad Battery Box
- Existing Bush or Shrub
- Existing Gas Cap or Stub
- Existing Sanitary Cap or Stub
- Existing Storm Drain Cap or Stub
- Existing Water Cap or Stub
- Existing Sanitary Cleanout
- Existing Concrete Foundation
- Existing Traffic Signal Controller
- Existing Pad Mounted Signal Controller
- Existing Sixteenth Section Corner
- Existing Quarter Section Corner
- Existing Section Corner
- Existing Railroad Crossbuck
- Existing Satellite Dish
- Existing Fuel Dispensers
- Existing Flexible Delineator Type A
- Existing Flexible Delineator Type B
- Existing Flexible Delineator Type C
- Existing Flexible Delineator Type D
- Existing Flexible Delineator Type E
- Existing Delineator Type A
- Existing Delineator Type B
- Existing Delineator Type C
- Existing Delineator Type D
- Existing Delineator Type E
- Existing EFB Misc
- Existing Flashing Beacon
- Existing Pipe Mounted Flasher
- Existing Pad Mounted Feed Point
- Existing Pipe Mounted Feed Point with Pad
- Existing Pole Mounted Feed Point
- Existing Railroad Frog
- Existing Snow Gate 18
- Existing Snow Gate 28
- Existing Snow Gate 40
- Existing Headwall
- Existing Pedestrian Head with Number
- Existing Signal Head
- Existing Sprinkler Head
- Existing Fire Hydrant
- Existing Catch Basin Drop Inlet
- Existing Curb Inlet
- Existing Manhole Inlet
- Existing Junction Box

NORTH DAKOTA DEPARTMENT OF TRANSPORTATION	
07-01-14	
REVISIONS	
DATE	CHANGE

This document was originally issued and sealed by Roger Weigel, Registration Number PE-2930, on 07/01/14 and the original document is stored at the North Dakota Department of Transportation

Symbols

D-101-31

- Existing Light Standard
- Existing High Mast Light Standard 10 Luminaire
- Existing High Mast Light Standard 3 Luminaire
- Existing High Mast Light Standard 4 Luminaire
- Existing High Mast Light Standard 5 Luminaire
- Existing High Mast Light Standard 6 Luminaire
- Existing High Mast Light Standard 7 Luminaire
- Existing High Mast Light Standard 8 Luminaire
- Existing High Mast Light Standard 9 Luminaire
- Existing Overhead Sign Structure Load Center
- Existing Luminaire
- Existing Light Standard Luminaire
- Existing Federal Mailbox
- Existing Private Mailbox
- Existing Meander Section Corner
- Existing Meter
- Existing Electrical Manhole
- Existing Gas Manhole
- Existing Sanitary Manhole
- Existing Sanitary Force Main Manhole
- Existing Sanitary Manhole with Valve
- Existing Storm Drain Manhole
- Existing Force Main Storm Drain Manhole
- Existing Force Main Storm Drain Manhole with Valve
- Existing Telephone Manhole
- Existing Manhole with Valve Water
- Existing Water Manhole
- Existing Mile Post Type A
- Existing Mile Post Type B
- Existing Mile Post Type C
- Existing Reference Marker
- Existing RW Marker
- Existing Utility Marker
- Iron Monument Found
- Iron Pin R/W Monument
- Existing Object Marker Type I
- Existing Object Marker Type II
- Existing Object Marker Type III
- Existing Electrical Pedestal
- Existing Telephone Pedestal
- Existing Fiber Optic Telephone Pedestal
- Existing TV Pedestal
- Existing Fiber Optic TV Pedestal
- Existing Fuel Filler Pipes
- Existing Traverse PI Aerial Panel
- Existing Pole
- Existing Power Pole
- Existing Power Pole with Transformer
- Existing Telephone Pole
- Existing Wood Pole
- Existing Post
- Existing Pedestrian Push Button Post
- Existing Control Point CP
- Existing Control Point GPS-RTK
- Existing Control Point TRI
- Existing Reference Marker Point NGS
- Existing Pull Box
- Existing Intelligent Transportation Pull Box
- Existing Water Pump
- Existing Slotted Reinforced Concrete Pipe
- Existing RR Profile Spot
- Existing Fuel Leak Sensors
- Existing Highway Sign
- Existing Miscellaneous Spot
- Existing Lighting Standard Pole
- Existing Traffic Signal Standard
- Existing Transformer
- Existing Large Evergreen Tree
- Existing Small Evergreen Tree
- Existing Large Tree
- Existing Small Tree
- Existing Tree Trunk
- Existing Pad Mounted Traffic Signal Control Box
- Existing Undefined Manhole
- Existing Undefined Pull Box
- Existing Undefined Pedestal
- Existing Undefined Valve
- Existing Undefined Pipe Vent
- Existing Gas Valve
- Existing Water Valve
- Existing Fuel Pipe Vent
- Existing Gas Pipe Vent
- Existing Sanitary Pipe Vent
- Existing Storm Drain Pipe Vent
- Existing Water Pipe Vent
- Existing Weather Station
- Existing Ground Water Well Bore Hole
- Existing Windmill or Tower
- Existing Witness Corner
- Flashing Beacon
- Flagger
- Pipe Mounted Flasher
- Sanitary Force Main with Valve

NORTH DAKOTA DEPARTMENT OF TRANSPORTATION	
07-01-14	
REVISIONS	
DATE	CHANGE

This document was originally issued and sealed by Roger Weigel, Registration Number PE-2930, on 07/01/14 and the original document is stored at the North Dakota Department of Transportation

Symbols

D-101-32

- Pad Mounted Feed Point
- Pipe Mounted Feed Point with Pad
- Pole Mounted Feed Point
- Headwall
- Double Headwall with Vegitation Barrier
- Single Headwall with Vegitation Barrier
- Pole Mounted Head
- Sprinkler Head
- Fire Hydrant
- Inlet Type 1
- Inlet Type 2
- Double Inlet Type 2
- Inlet Grate Type 2
- Junction Box
- High Mast Light Standard 10 Luminaire
- High Mast Light Standard 3 Luminaire
- High Mast Light Standard 4 Luminaire
- High Mast Light Standard 5 Luminaire
- High Mast Light Standard 6 Luminaire
- High Mast Light Standard 7 Luminaire
- High Mast Light Standard 8 Luminaire
- High Mast Light Standard 9 Luminaire
- Relocate Light Standard
- Overhead Sign Structure Load Center
- Light Standard 100 Watt High Pressure Sodium Vapor Luminaire
- Light Standard 1000 Watt High Pressure Sodium Vapor Luminaire
- Light Standard 150 Watt High Pressure Sodium Vapor Luminaire
- Light Standard 175 Watt High Pressure Sodium Vapor Luminaire
- Light Standard 200 Watt High Pressure Sodium Vapor Luminaire
- Light Standard 250 Watt High Pressure Sodium Vapor Luminaire
- Light Standard 310 Watt High Pressure Sodium Vapor Luminaire
- Light Standard 35 Watt High Pressure Sodium Vapor Luminaire
- Light Standard 400 Watt High Pressure Sodium Vapor Luminaire
- Light Standard 50 Watt High Pressure Sodium Vapor Luminaire
- Light Standard 70 Watt High Pressure Sodium Vapor Luminaire
- Light Standard 700 Watt High Pressure Sodium Vapor Luminaire
- Manhole
- Manhole 48 Inch
- Sanitary Force Main Manhole
- Sanitary Sewer Manhole
- Storm Drain Manhole
- Storm Drain Manhole with Inlet
- Reset Mile Post
- Mile Post Type A
- Mile Post Type B
- Mile Post Type C
- Right of Way Marker
- Tubular Marker
- Alignment Monument
- Iron Pin Reference Monument
- Object Marker Type I
- Object Marker Type II
- Object Marker Type III
- Caution Mode Arrow Panel
- Back to Back Vertical Panel Sign
- Double Direction Arrow Panel
- Left Directional Arrow Panel
- Right Directional Arrow Panel
- Sequencing Arrow Panel
- Truck Mounted Arrow Panel
- Power Pole
- Wood Pole
- Pedestrian Push Button Post
- Property Corner
- Pull Box
- Intelligent Transportation Pull Box
- Sanitary Pump
- Storm Drain Pump
- Reinforced Pavement
- Reinforced Concrete End Section 15 Inch
- Reinforced Concrete End Section 18 Inch
- Reinforced Concrete End Section 24 Inch
- Reinforced Concrete End Section 30 Inch
- Reinforced Concrete End Section 36 Inch
- Reinforced Concrete End Section 42 Inch
- Reinforced Concrete End Section 48 Inch
- Reinforced Concrete End Section 54 Inch
- Reset Right of Way Marker
- Reset USGS Marker
- Right of Way Markers
- Riser 30 Inch
- CSB — Continuous Split Barrel Sample
- FA — Flight Auger Sample
- SB — Split Barrel Sample
- T — Thinwall Tube Sample
- Highway Sign
- SNOW GATE 18 FT
- SNOW GATE 28 FT
- SNOW GATE 40 FT
- N — Standard Penetration Test
- Transformer
- Incl — Inclinometer Tube
- Underdrain Cleanout
- Excavation Unit
- Water Valve

NORTH DAKOTA DEPARTMENT OF TRANSPORTATION	
07-01-14	
REVISIONS	
DATE	CHANGE

This document was originally issued and sealed by Roger Weigel, Registration Number PE-2930, on 07/01/14 and the original document is stored at the North Dakota Department of Transportation

STANDARD 90° FLARED INTERSECTION

D-203-6

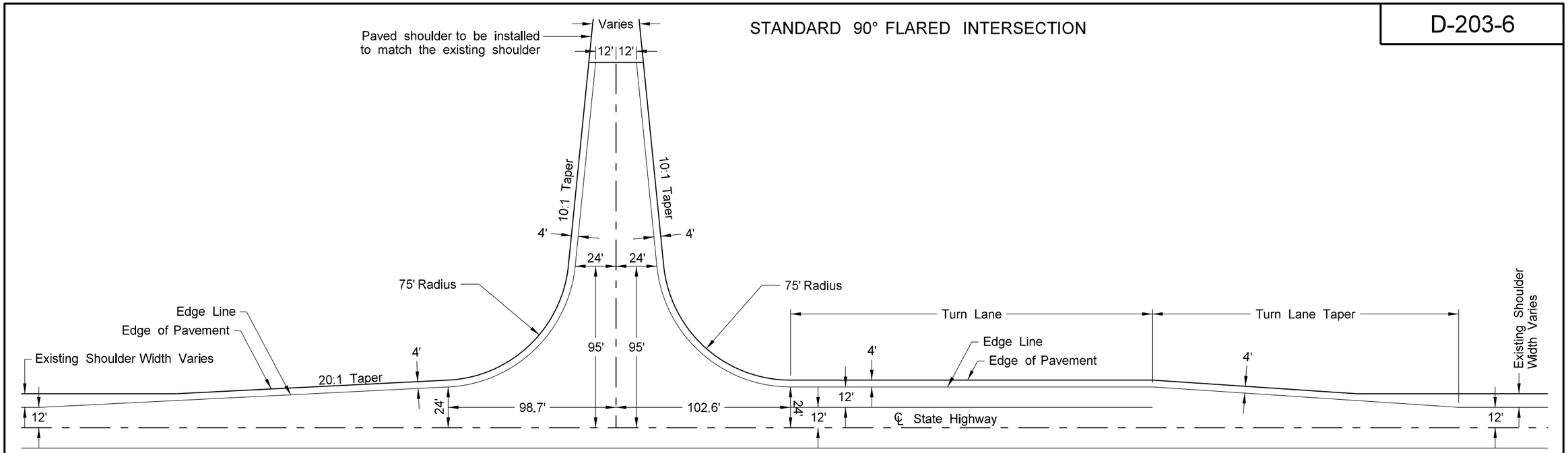

Type B
90° Flared Intersection with Turn Lane

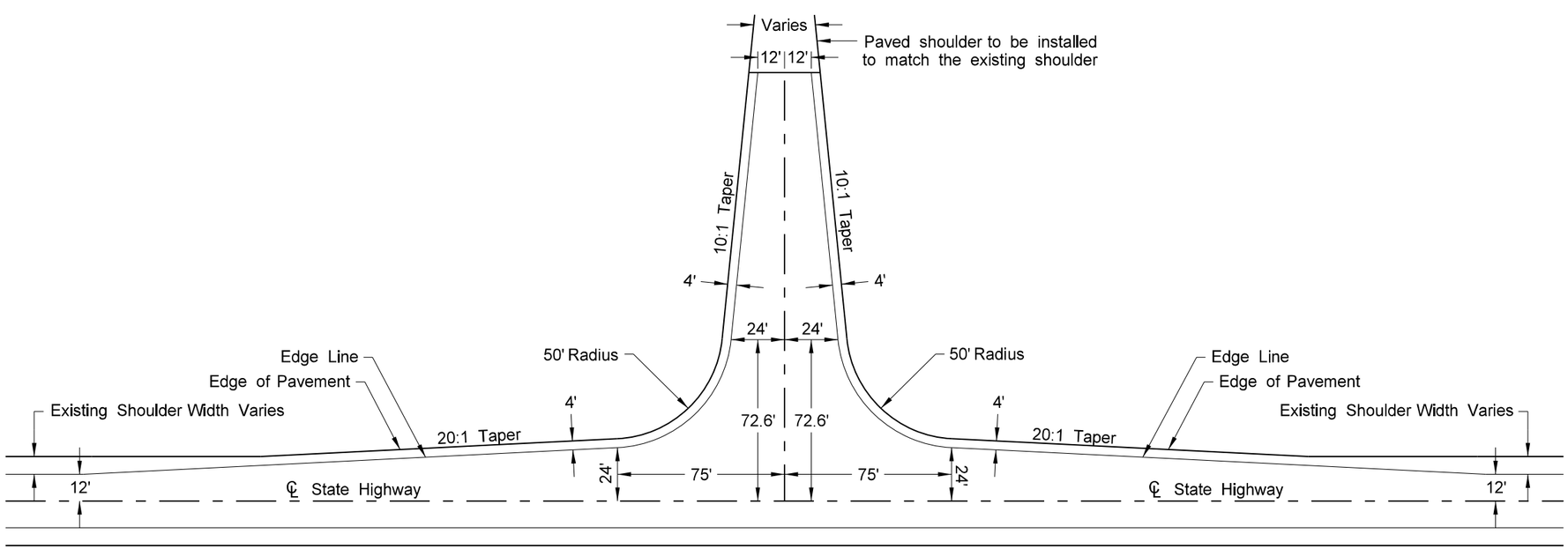

Type A
90° Flared Intersection

NORTH DAKOTA DEPARTMENT OF TRANSPORTATION	
5-19-09	
REVISIONS	
DATE	CHANGE

This document was originally issued and sealed by Roger Weigel Registration Number PE- 2930 , on 5/19/09 and the original document is stored at the North Dakota Department of Transportation

D-255-2

EROSION AND SILTATION CONTROL
EROSION CONTROL BLANKET INSTALLATION

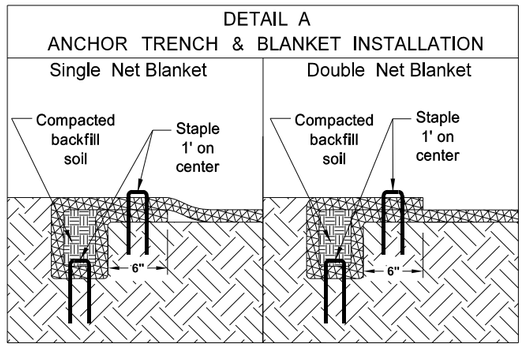

NOTE:
If a Single Net Blanket is used the side with the netting should be on the top once the blanket is installed.

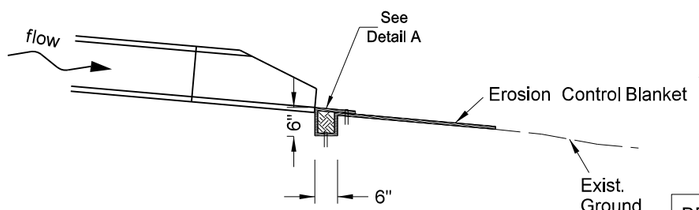

PIPE OUTLETS

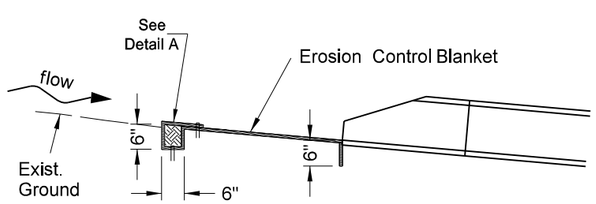

PIPE INLETS

INSTALLATION AT PIPE ENDS

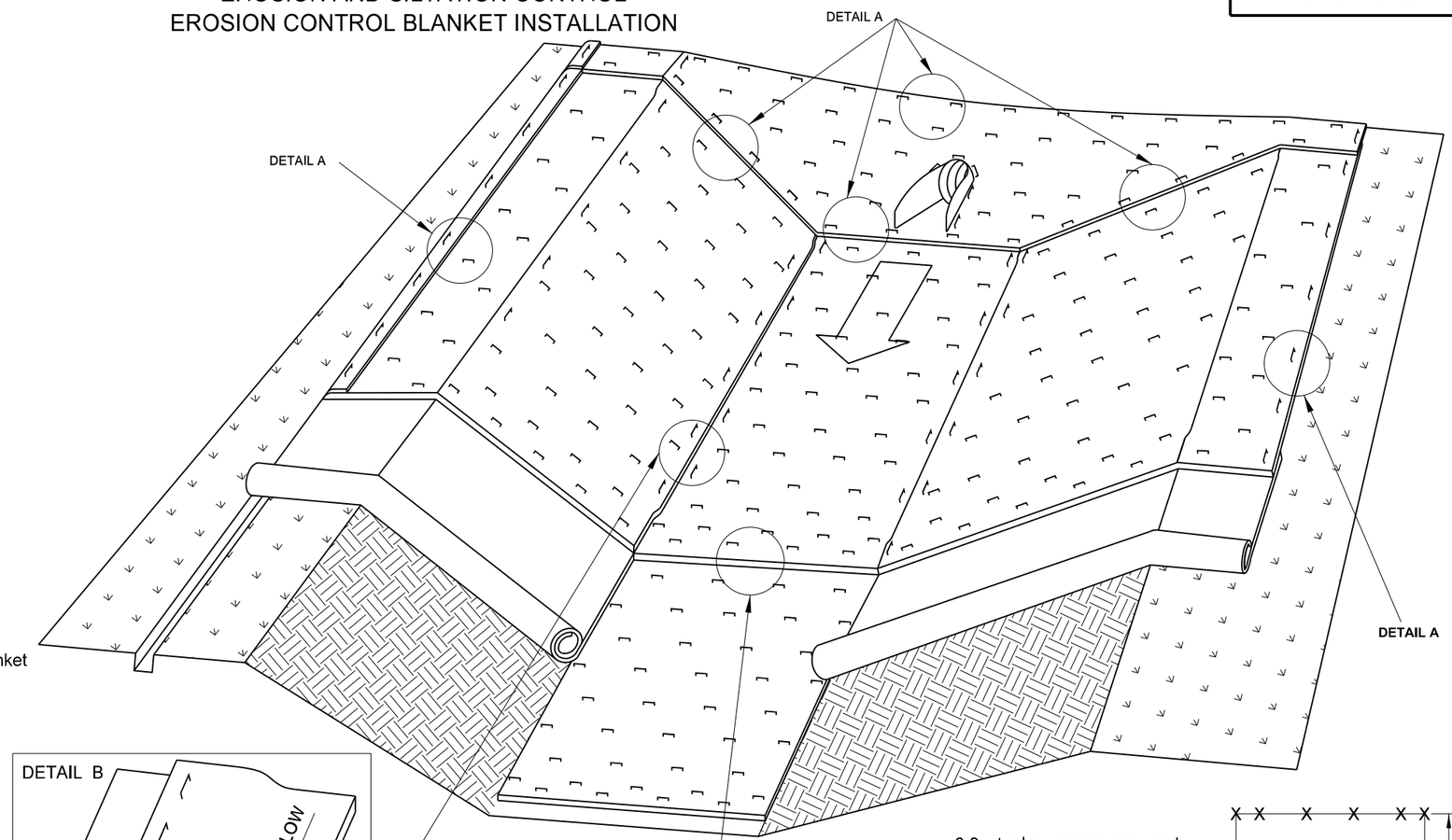

BLANKET LAYOUT
CHANNEL OR SLOPE INSTALLATION

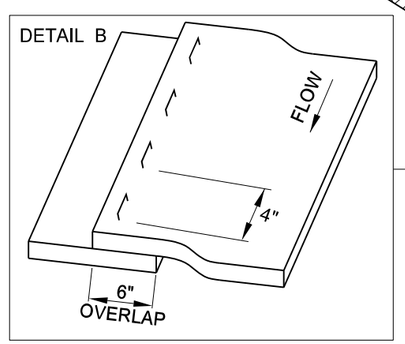

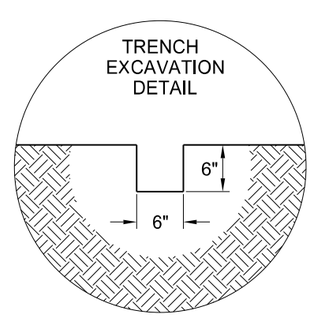

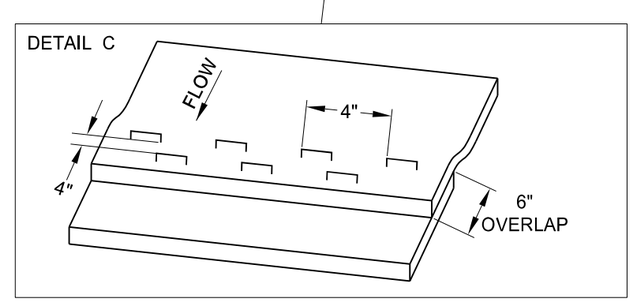

3.8 staples per square yard using 8-inch 11 gauge wire "u" staples.

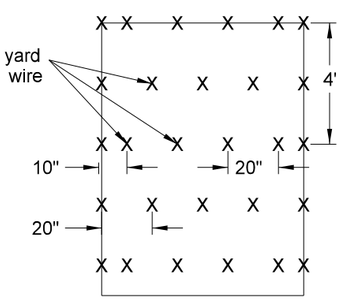

STAPLE PATTERN

NORTH DAKOTA DEPARTMENT OF TRANSPORTATION	
10-03-13	
REVISIONS	
DATE	CHANGE
06-26-14	Changed standard drawing number from D-708-5 to D-255-2.
07-27-15	Changed installation details such as trench depth and overlap dimensions.

This document was originally issued and sealed by Roger Weigel Registration Number PE- 2930, on 07/27/15 and the original document is stored at the North Dakota Department of Transportation

D-261-1

EROSION CONTROL
FIBER ROLL PLACEMENT DETAILS

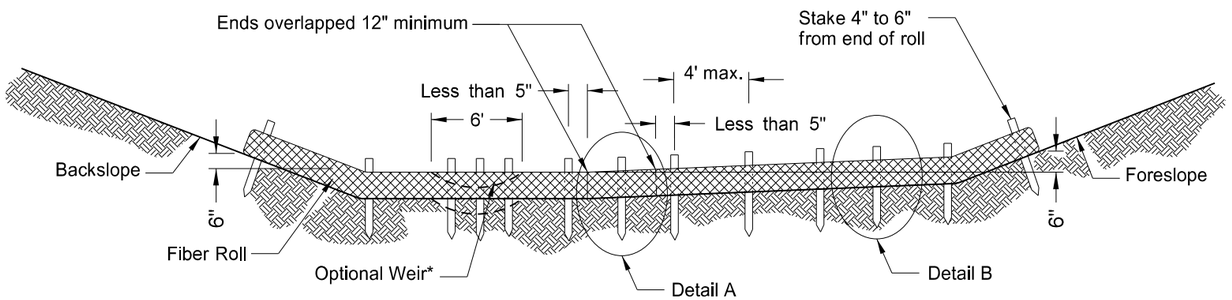

*Optional Weir. Use in flat areas, such as the Red River Valley, where there is potential for water to back up on adjacent property. Lower fiber roll enough to prevent water from backing up on adjacent property. Do not use 20-inch fiber rolls in flat areas where there is potential for water to back up on adjacent property.

12 OR 20 INCH FIBER ROLL - DITCH BOTTOM

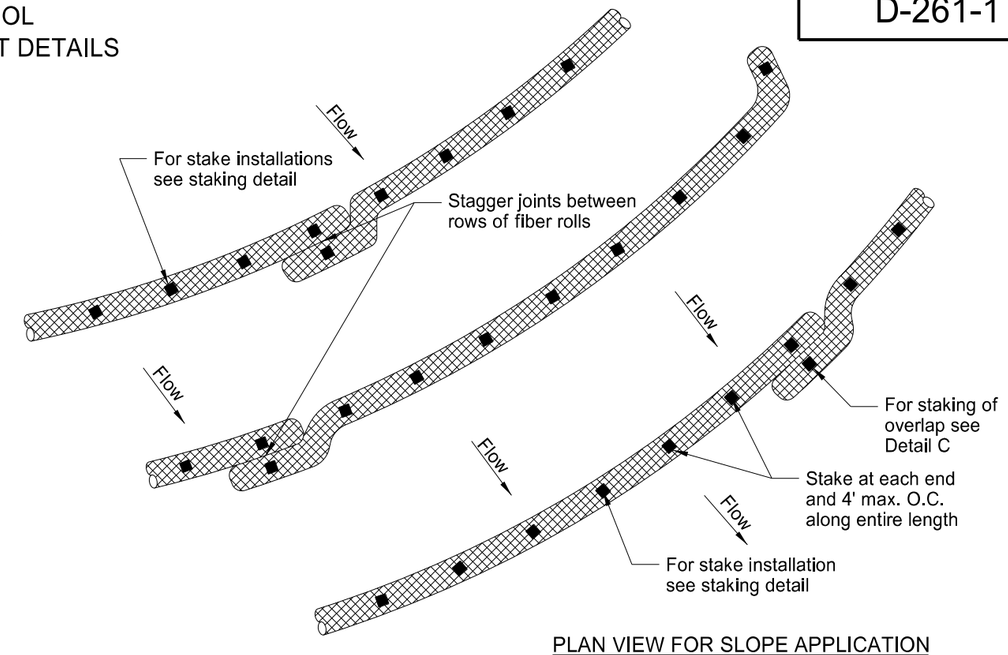

PLAN VIEW FOR SLOPE APPLICATION

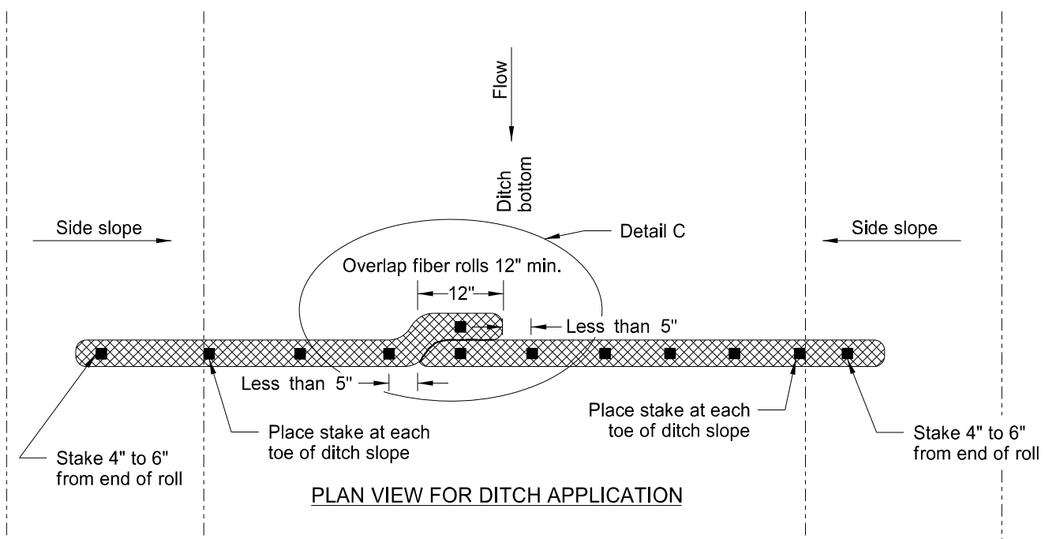

PLAN VIEW FOR DITCH APPLICATION

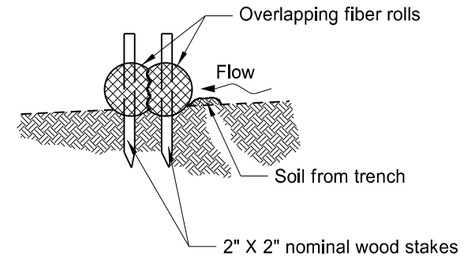

Detail A

Fiber Roll Overlapping Staking Detail

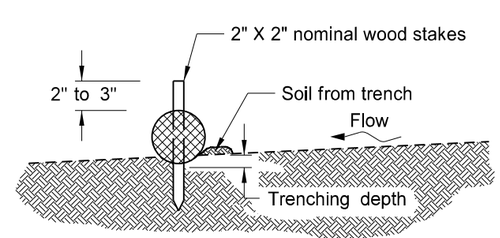

Detail B

Fiber Roll Staking Detail

FIBER ROLL DIAMETER	NOMINAL STAKE SIZE	MINIMUM STAKE LENGTH	MINIMUM TRENCH DEPTH	MAXIMUM TRENCH DEPTH
6"	2" x 2"	18"	2"	2"
12"	2" x 2"	24"	2"	3"
20"	2" x 2"	36"	3"	5"

NOTE: Runoff must not be allowed to run under or around roll.

NORTH DAKOTA DEPARTMENT OF TRANSPORTATION

11-18-10

REVISIONS

DATE	CHANGE
06-10-13	Added plan view for ditch and slope application. Added table with values for stake and trench dimensions.
10-04-13	Revised fiber roll overlap detail.
06-26-14	Changed standard drawing number from D-708-7 to D-261-1.

This document was originally issued and sealed by Roger Weigel, Registration Number PE-2930, on 06/26/14 and the original document is stored at the North Dakota Department of Transportation

BREAKAWAY SYSTEMS FOR CONSTRUCTION ZONE SIGNS

D-704-7

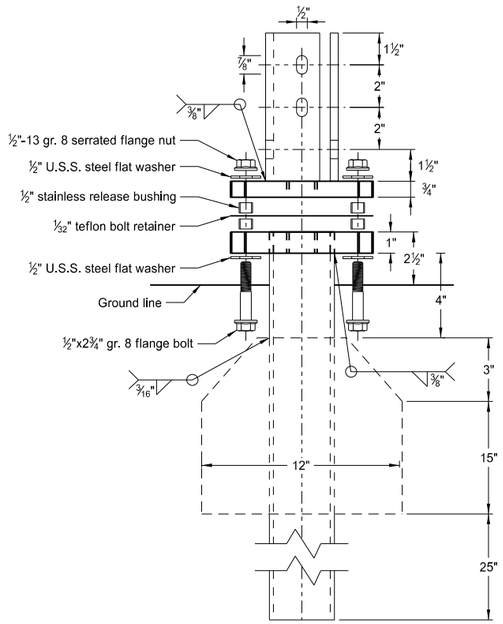

Multi-Directional
Slip Base Assembly

Perforated Tube

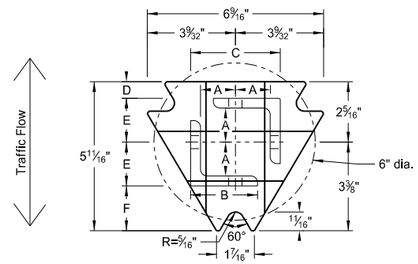

Top Post Receiver
Plate - ASTM A572 grade 50
Angle Receiver - 2½"x2½"x⅜" ASTM A36 structural angle

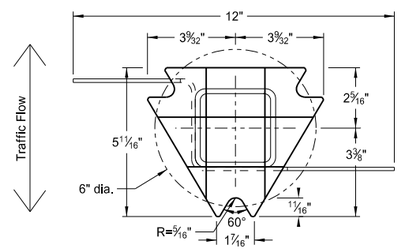

Bottom Soil Stub
Tube - 3"x3"x7 gauge ASTM A500 grade B tube
Stabilizing Wing - 7 gauge H.R.P.O. ASTM A1011
Plate - ASTM A572 grade 50

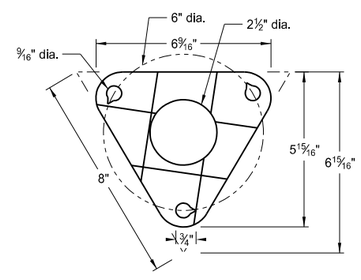

Bolt Retainer for Base Connection
Bolt Retainer- 1/32" Reprocessed Teflon

Notes:

1. Slip base bolts shall be torqued as specified by the manufacturer.
2. Anchor shall have a yield strength of 43.9 KSI and tensile strength of 59.3 KSI.
3. The 4" vertical clearance is required for the anchor or breakaway base. The 4"x60" measurement shall be made above and below post location and also back and ahead of the post.
4. When used in concrete sidewalk, anchor shall be same except without the wings.
5. Four post signs shall have over 7' between the first and the fourth posts.

Telescoping Perforated Tube						
Number of Posts	Post Size in.	Wall Thick-ness Gauge	Sleeve Size in.	Wall Thick-ness Gauge	Slip Base	Anchor Size without Slip Base in.
1	2	12			No	2¼
1	2¼	12			No	2½
1	2½	12			(A)	3
1	2½	10			Yes	
1	2¼	12	2	12	Yes	
1	2½	12	2¼	12	Yes	
2	2	12			No	2¼
2	2¼	12			No	2½
2	2½	12			Yes	
2	2½	12			Yes	
2	2¼	10	2	12	Yes	
2	2½	12	2¼	12	Yes	
3 & 4	2½	12			Yes	
3 & 4	2½	10			Yes	
3 & 4	2½	12	2¼	12	Yes	
3 & 4	2¼	12	2	12	Yes	
3 & 4	2½	10	2 3/16	10	Yes	

(A) The breakaway base is required when the support is placed in weak soils. The Engineer shall determine if the soils are weak.

(B) The 2 3/16"x10 ga. may be inserted into 2½"x10 ga. for additional wind load.

Properties of Telescoping Perforated Tube						
Tube Size in.	Wall Thickness in.	U.S. Standard Gauge	Weight per Foot lbs.	Moment of Inertia in.^{4}	Cross Sec. Area in.^{2}	Section Modulus in.^{3}
1½ x 1½	0.105	12	1.702	0.129	0.380	0.172
2 x 2	0.105	12	2.416	0.372	0.590	0.372
2¼ x 2¼	0.105	12	2.773	0.561	0.695	0.499
2 3/16 x 2 3/16	0.135	10	3.432	0.605	0.841	0.590
2½ x 2½	0.105	12	3.141	0.804	0.803	0.643
2½ x 2½	0.135	10	4.006	0.979	1.010	0.785

Top Post Receiver Data Table						
Square Post Sizes (B)	A	B	C	D	E	F
2 3/16"x10 ga.	1 9/64"	2½"	3 1/32"	25/32"	1 33/64"	1⅞"
2½"x10 ga.	1 9/32"	2½"	3 5/16"	⅝"	1 21/32"	1¾"

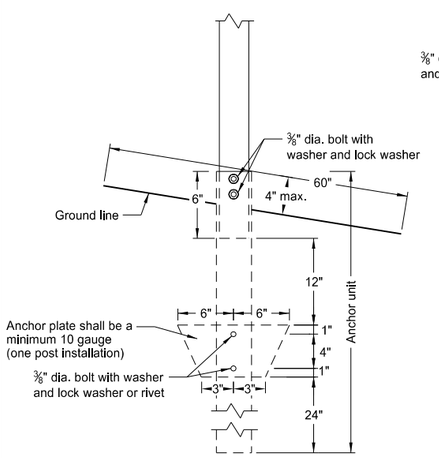

Anchor Unit and Post Assembly

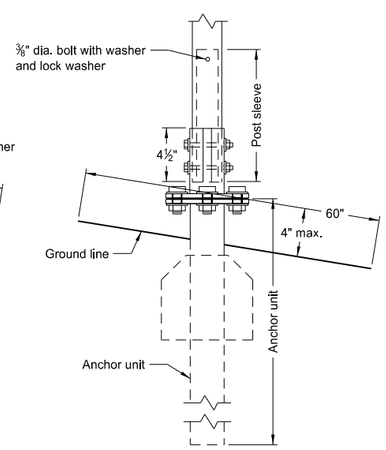

Multi-Directional
Slip Base Anchor Unit
and Post Sleeve Assembly

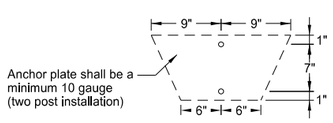

NORTH DAKOTA DEPARTMENT OF TRANSPORTATION	
2-28-14	
REVISIONS	
DATE	CHANGE

This document was originally issued and sealed by Roger Weigel, Registration Number PE- 2930, on 2/28/14 and the original document is stored at the North Dakota Department of Transportation

BREAKAWAY SYSTEMS FOR CONSTRUCTION ZONE SIGNS

D-704-8

U-Channel Post

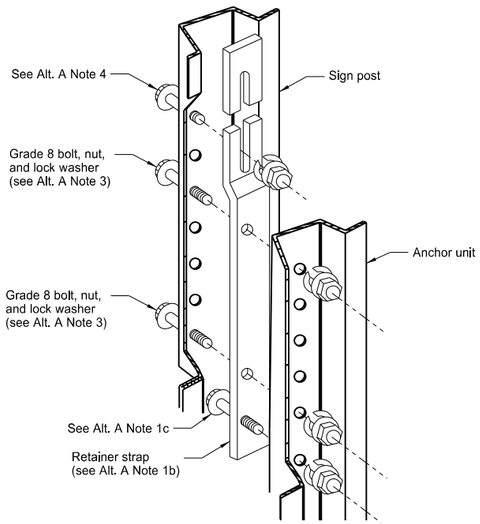

Detail A

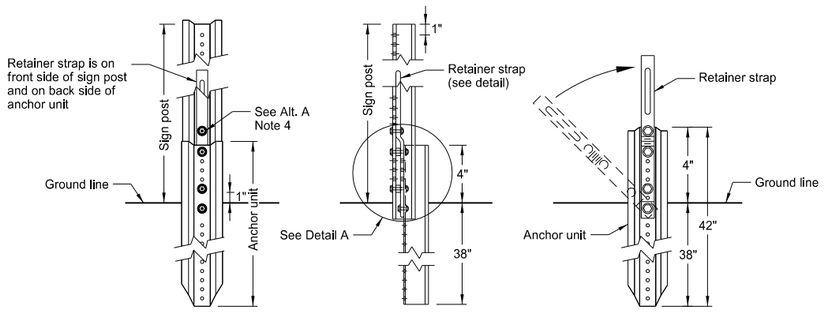

Front View | Side View | Back View

Breakaway U-Channel Detail
Alternate A

A maximum of 2 posts shall be installed within 7'.

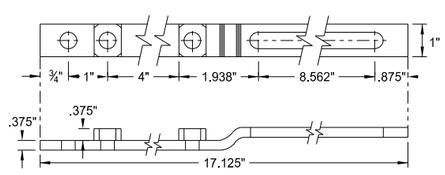

Retainer Strap Detail

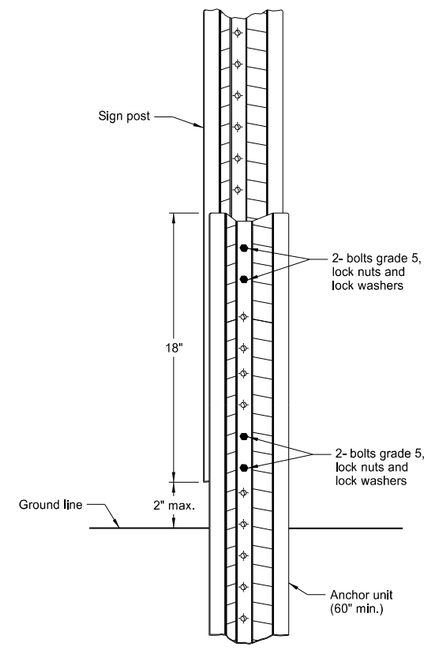

Breakaway U-Channel Splice Detail
Alternate B
(2.5 and 3 lb/ft)

A maximum of 3 posts shall be installed within 7'.

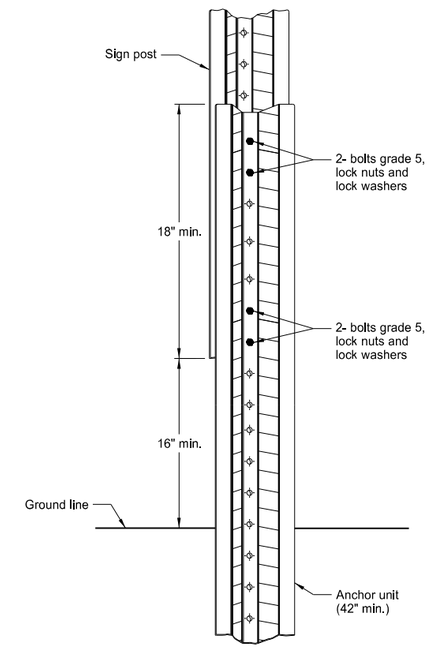

Breakaway U-Channel Splice Detail
Alternate C
(2.5 and 3 lb/ft)

A maximum of 3 posts shall be installed within 7'.

Alternate A Steps of Installation:

1. a) Drive anchor unit to within 12" of ground level.
   b) Proper assembly established by lining up the bottom hole of retainer strap with the 6th hole from the top of the anchor unit.
   c) Assemble strap to back of anchor unit using 5/16"x2" bolt, lock washer and nut.
   d) Rotate strap 90° to left.
2. a) Drive anchor unit to 4" above ground.
   b) Rotate strap to vertical position.
3. a) Place 5/16"x2" bolt, lock washer and nut in bottom of sign post to facilitate alignment of sign post with proper hole in anchor unit.
   b) Alternately tighten two connector bolts.
4. Complete assembly by tightening 5/16"x2" bolt (this fastens sign post to retainer strap).
5. The base post, strap and sign post shall be properly nested. Proper nesting occurs when all flat surfaces of the base post, strap, and sign post at the bolts have full contact across the entire width.

NORTH DAKOTA DEPARTMENT OF TRANSPORTATION	
2-28-14	
REVISIONS	
DATE	CHANGE

This document was originally issued and sealed by Roger Weigel, Registration Number PE- 2930, on 2/28/14 and the original document is stored at the North Dakota Department of Transportation

CONSTRUCTION SIGN DETAILS
TERMINAL AND GUIDE SIGNS

D-704-9

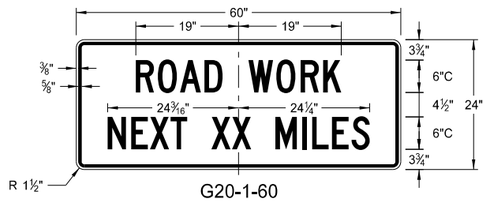

G20-1-60
Legend: black (non-refl)
Background: orange

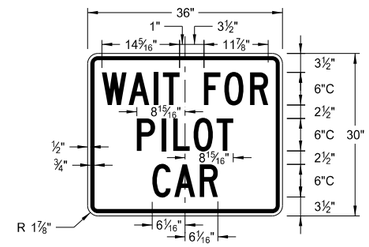

G20-4b-36
Legend: black (non-refl)
Background; orange

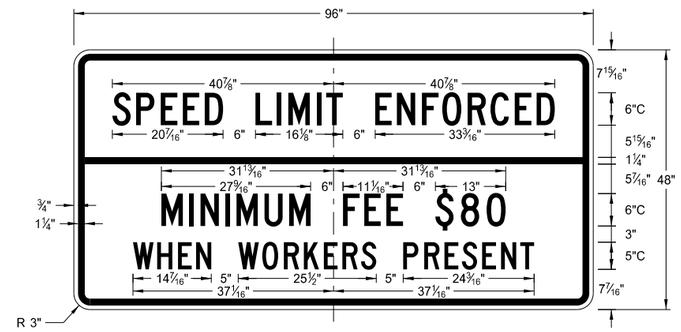

G20-55-96
Legend: black (non-refl)
Background: orange

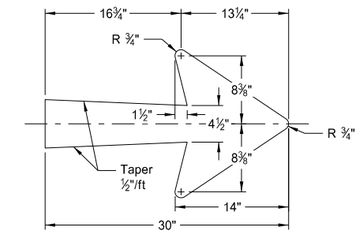

E5-1-48

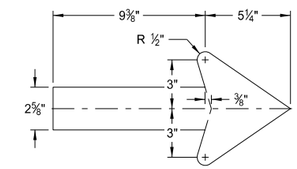

G20-50a-72
G20-52a-72

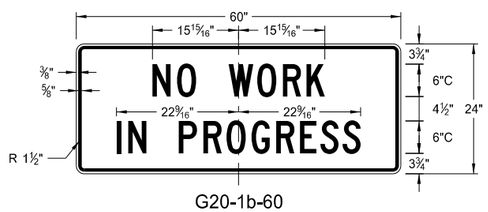

G20-1b-60
Legend: black (non-refl)
Background: orange

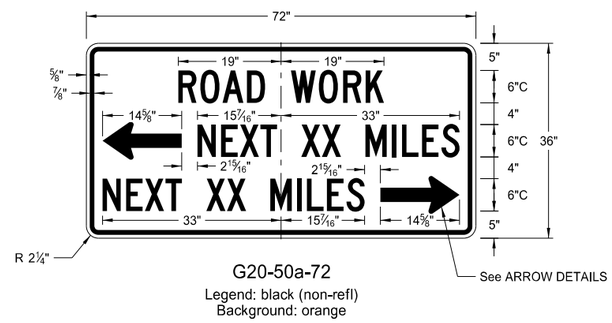

G20-50a-72
Legend: black (non-refl)
Background: orange

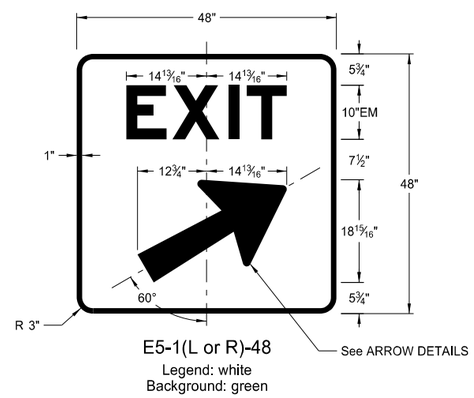

E5-1(L or R)-48
Legend: white
Background: green

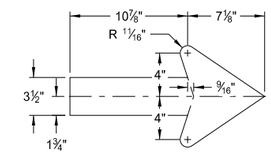

M4-9(L or R)-30
Right or Left

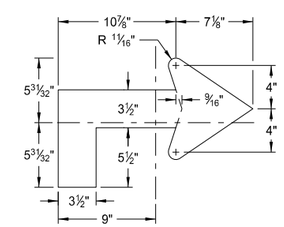

M4-9(L or R)-30
Advanced Right or Left

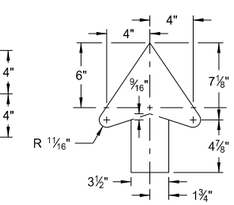

M4-9-30
Straight

ARROW DETAILS

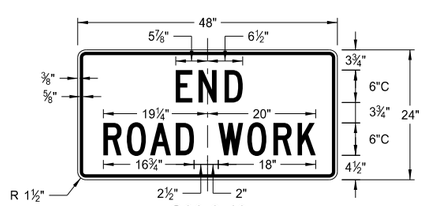

G20-2-48
Legend: black (non-refl)
Background: orange

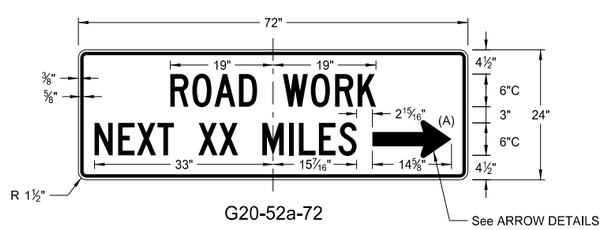

G20-52a-72
Legend: black (non-refl)
Background: orange

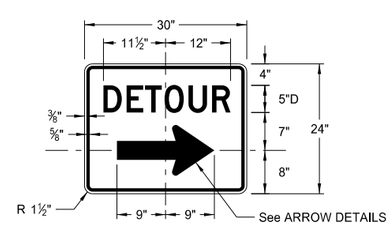

M4-9(L or R)-30 &
M4-9-30
Legend: black (non-refl)
Background: orange

NOTES:

(A) Arrow may be right or left of the legend to indicate construction to the right or left.

NORTH DAKOTA DEPARTMENT OF TRANSPORTATION	
8-13-13	
REVISIONS	
DATE	CHANGE

This document was originally issued and sealed by Roger Weigel, Registration Number PE- 2930, on 8/13/13 and the original document is stored at the North Dakota Department of Transportation

CONSTRUCTION SIGN DETAILS
REGULATORY SIGNS

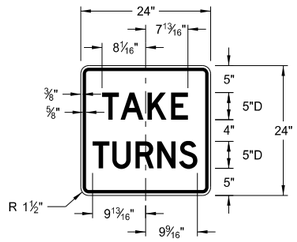

R1-50-24
Legend: black (non-refl)
Background: white

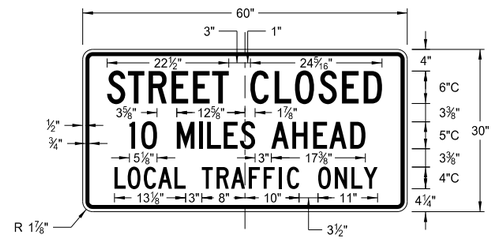

R11-3c-60
Legend: black (non-refl)
Background: white

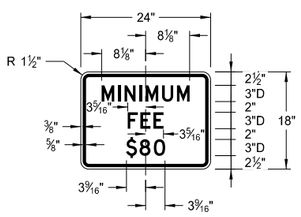

R2-1a-24
Legend: black (non-refl)
Background: white

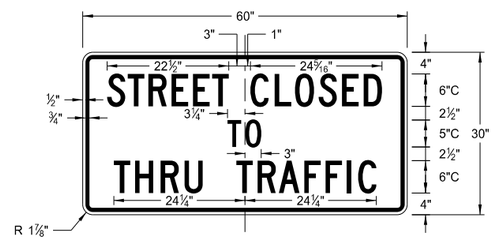

R11-4a-60
Legend: black (non-refl)
Background: white

R11-2a-48
Legend: black (non-refl)
Background: white

NORTH DAKOTA DEPARTMENT OF TRANSPORTATION	
8-13-13	
REVISIONS	
DATE	CHANGE

This document was originally issued and sealed by Roger Weigel, Registration Number PE- 2930, on 8/13/13 and the original document is stored at the North Dakota Department of Transportation

D-704-11

CONSTRUCTION SIGN DETAILS
WARNING SIGNS

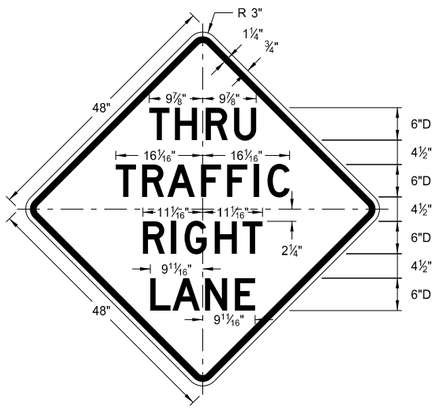

W5-8-48
Legend: black (non-refl)
Background: orange

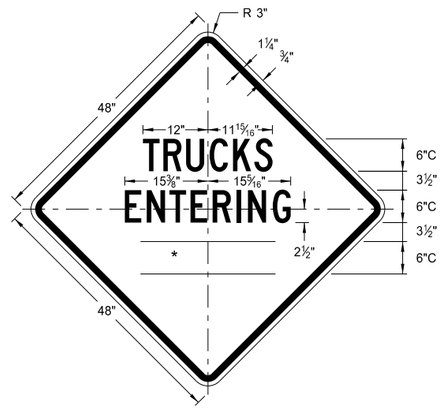

W8-54-48
Legend: black (non-refl)
Background: orange

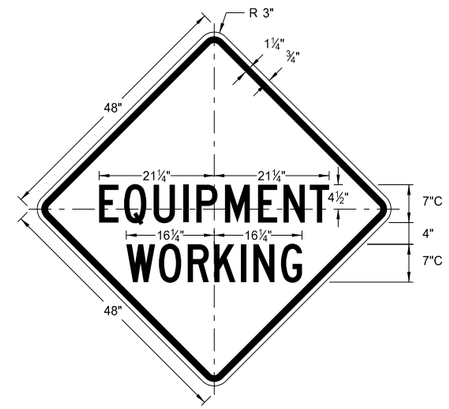

W20-51-48
Legend: black (non-refl)
Background: orange

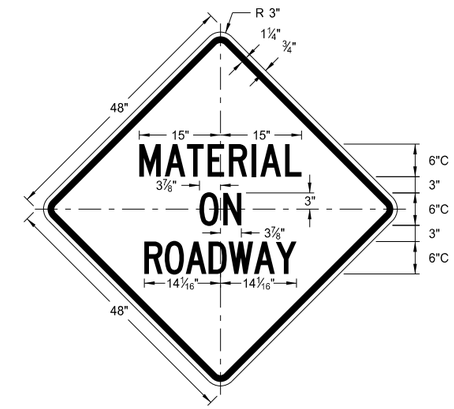

W21-51-48
Legend: black (non-refl)
Background: orange

WORD	LETTER SPACING
AHEAD	Standard
200 FT	Standard
350 FT	Standard
500 FT	Standard
1000 FT	Reduce 40%
1500 FT	Reduce 40%
½ MILE	Reduce 50%
1 MILE	Standard

* DISTANCE MESSAGES

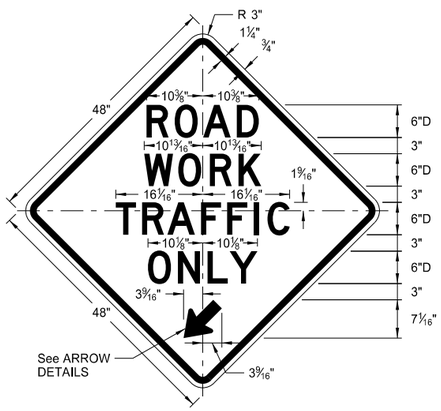

W5-9-48
Legend: black (non-refl)
Background: orange

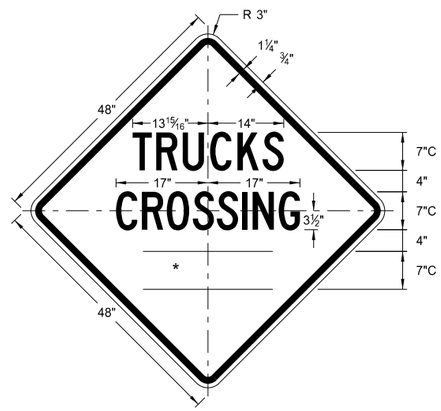

W8-55-48
Legend: black (non-refl)
Background: orange

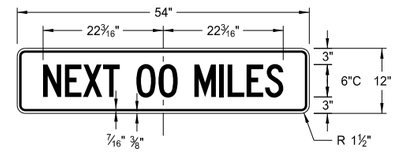

W20-52-54
Legend: black (non-refl)
Background: orange

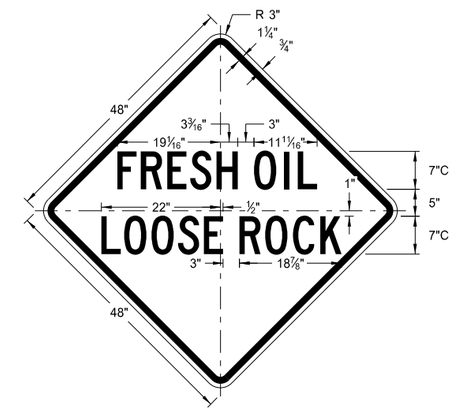

W22-8-48
Legend: black (non-refl)
Background: orange

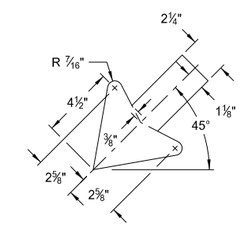

W5-9-48

ARROW DETAILS

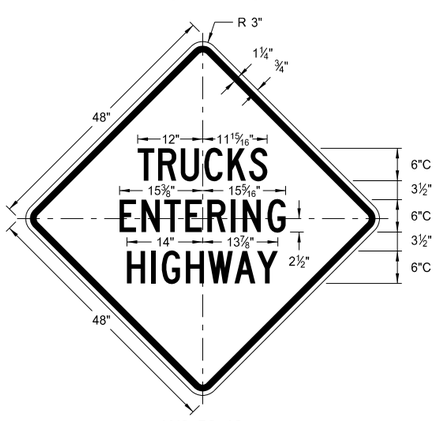

W8-53-48
Legend: black (non-refl)
Background: orange

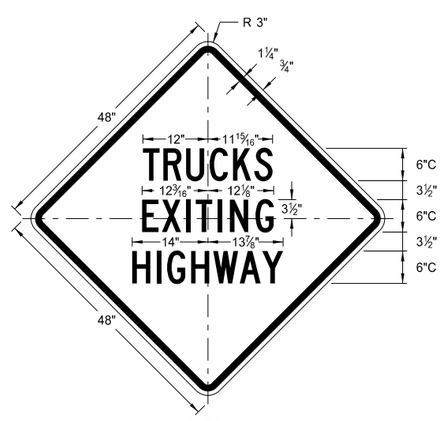

W8-56-48
Legend: black (non-refl)
Background: orange

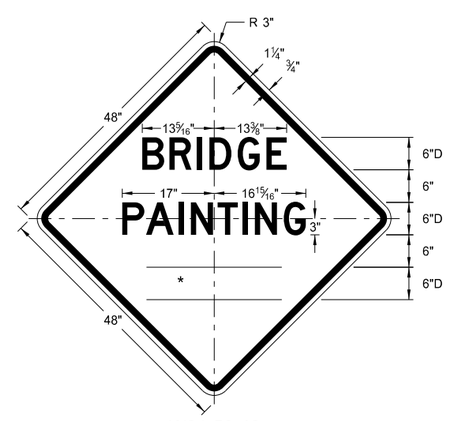

W21-50-48
Legend: black (non-refl)
Background: orange

NORTH DAKOTA DEPARTMENT OF TRANSPORTATION	
8-13-13	
REVISIONS	
DATE	CHANGE

This document was originally issued and sealed by Roger Weigel, Registration Number PE- 2930, on 8/13/13 and the original document is stored at the North Dakota Department of Transportation

SHOULDER CLOSURE TAPERS

D-704-12

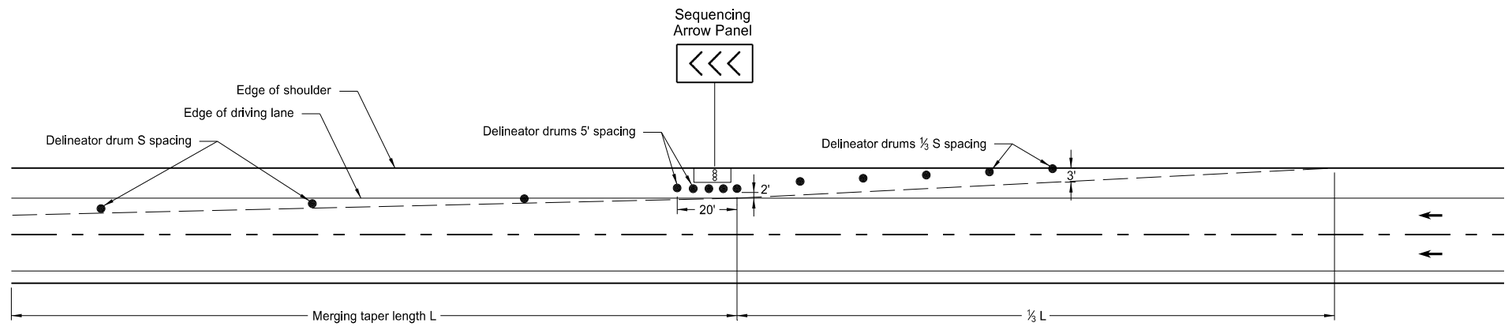

SHOULDER CLOSURE WITH LANE CLOSURE
(when shoulder is 8' or wider)

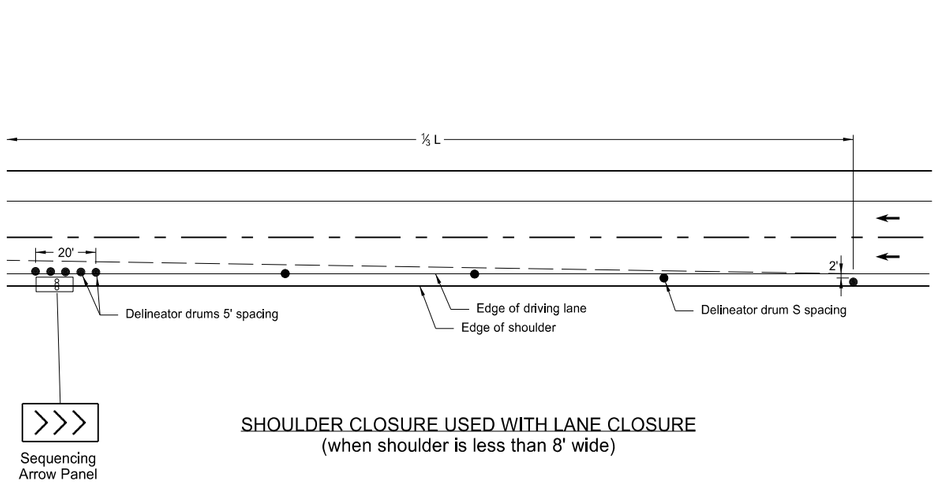

SHOULDER CLOSURE USED WITH LANE CLOSURE
(when shoulder is less than 8' wide)

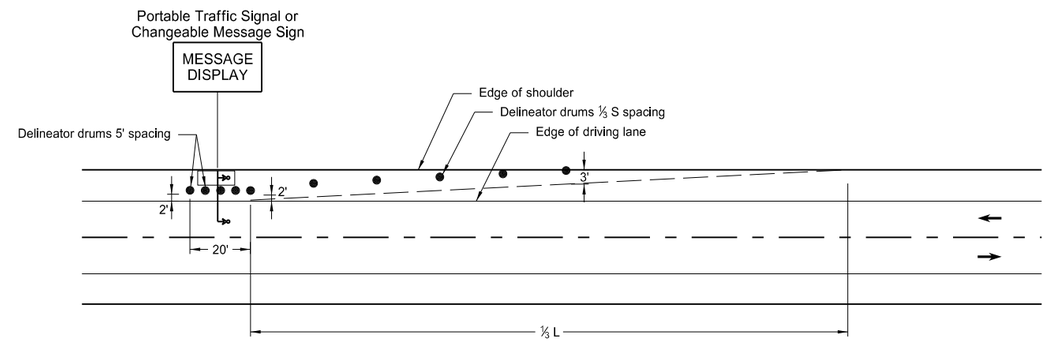

PORTABLE TRAFFIC SIGNAL OR CHANGEABLE MESSAGE SIGN ON SHOULDER

KEY			
●	Delineator Drum	∞	Sequencing Arrow Panel
∘	Message Display		Portable Traffic Signal

Notes:

1. S = Posted Speed Limit in mph
   W = Width of offset in feet
   L = Taper length in feet
   $L = WS^2/60$ (40mph or less)
   L = WS (45mph or more)

2. If a shoulder taper is used, it should have a length of approximately ⅓L. If a shoulder is used as a travel lane, a normal merging or shifting taper should be used.

3. When paved shoulders of 8 foot width or more are closed, channelizing devices shall be used to close the shoulder in advance to delineate the beginning of the work space and direct vehicular traffic to remain within the traveled way.

NORTH DAKOTA DEPARTMENT OF TRANSPORTATION	
10-3-13	
REVISIONS	
DATE	CHANGE

This document was originally issued and sealed by Roger Weigel Registration Number PE- 2930, on 10/3/13 and the original document is stored at the North Dakota Department of Transportation

BARRICADE AND CHANNELIZING DEVICE DETAILS

D-704-13

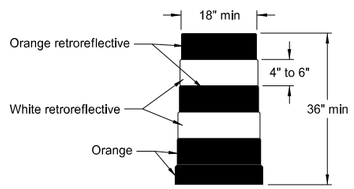

DELINEATOR DRUM

The markings on drums shall be horizontal, circumferential, alternating orange and white retroreflective stripes 4" to 6" wide. Each drum shall have a minimum of two orange and two white stripes with the top stripe being orange. Any nonretroreflectorized spaces between the horizontal orange and white stripes shall not exceed 3" wide. Stripes shall not be placed on ribs or indentations in the drum. Drums shall have closed tops that will not allow collection of construction debris or other debris. Ballast shall not be placed on the top of a drum.

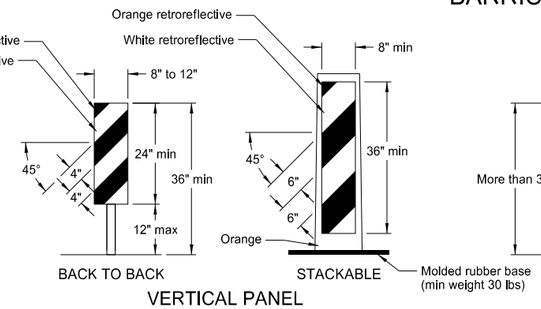

VERTICAL PANEL

Markings for vertical panels shall be alternating orange and white retroreflective stripes, sloping downward in the direction vehicular traffic is to pass. Retroreflective sheeting shall be placed on both sides of panel and shall have a minimum of 270 square inches of retroreflective area facing vehicular traffic. Where the height of the retroreflective material on the vertical panel is 36 inches or more, a stripe width of 6 inches shall be used.

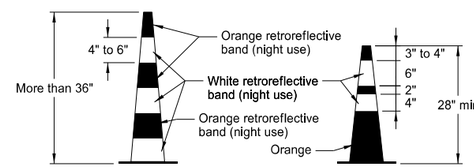

TRAFFIC CONE

Retroreflectorization of cones more than 36" in height shall be provided by alternating orange and white retroreflective stripes. Each cone shall have a minimum of two orange and two white stripes with the top stripe being orange. Any nonretroreflectorized space between the orange and white stripes shall not exceed 3" wide.

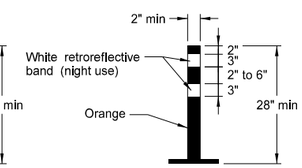

TUBULAR MARKER

Retroreflectorization of tubular markers more than 42" in height shall be provided by alternating four 4" to 6" wide orange and white stripes with the top stripe being orange.

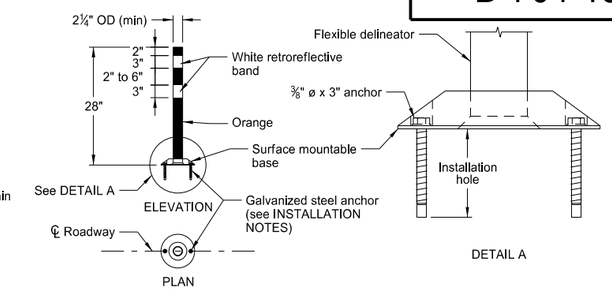

FLEXIBLE DELINEATOR

INSTALLATION NOTES:

1. Drill installation holes to diameter and depth as required by manufacturer's specifications.
2. For removal, remove anchors and fill installation hole with an epoxy designed to bond to pavement surface.
3. In lieu of bolted down base, the contractor may use an 8" x 8" butyl pad or hot melt butyl. Butyl shall be removed as close as possible to pavement surface.

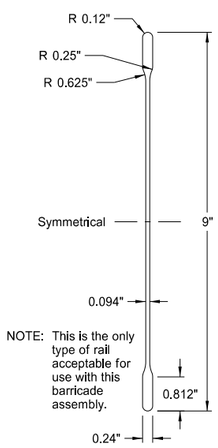

NOTE: This is the only type of rail acceptable for use with this barricade assembly.

BARRICADE BLADE DETAIL

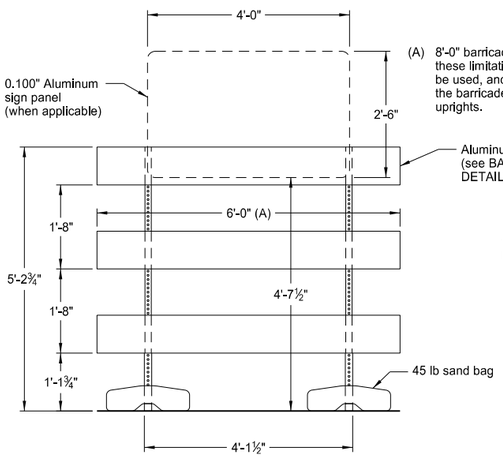

(A) 8'-0" barricade rails may be used with these limitations: 1) no sign panel can be used, and 2) no more than 1'-0" of the barricade rail can extend past the uprights.

ELEVATION VIEW

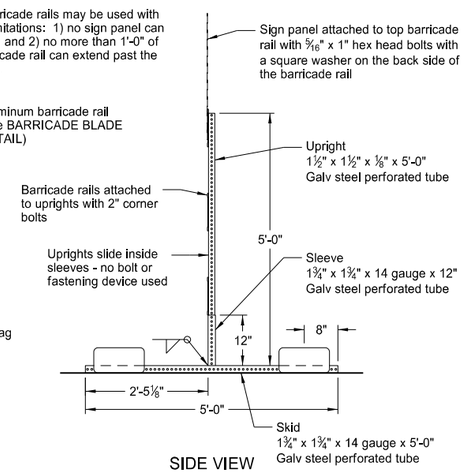

SIDE VIEW

BARRICADE ASSEMBLY DETAIL
(Aluminum Barricade Rails)

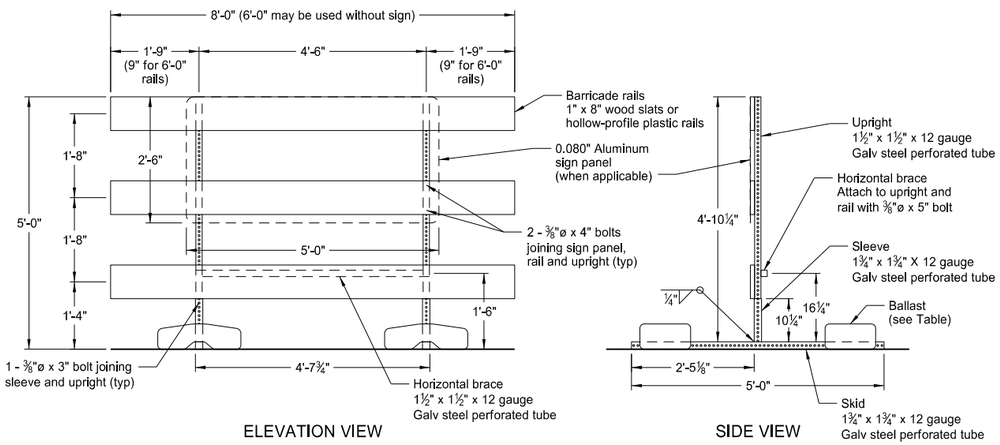

ELEVATION VIEW

SIDE VIEW

BARRICADE ASSEMBLY DETAIL
(Wood or Plastic Rails)

NOTE: Markings for barricades shall be alternating orange and white retroreflective stripes, sloping downward in the direction traffic is to pass. Retroreflective sheeting shall be placed on both sides of the rails and shall have a minimum of 270 square inches of visible retroreflective area facing vehicular traffic. When the barricade length is less than 36", the rail stripe width shall be 4".

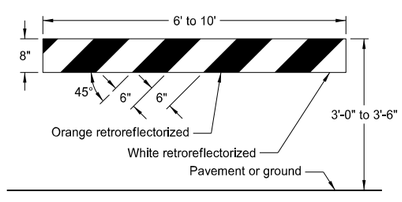

TYPE I BARRICADE

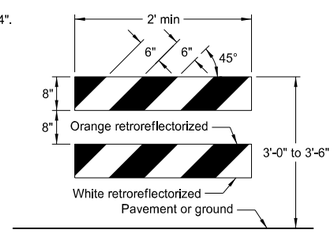

TYPE II BARRICADE

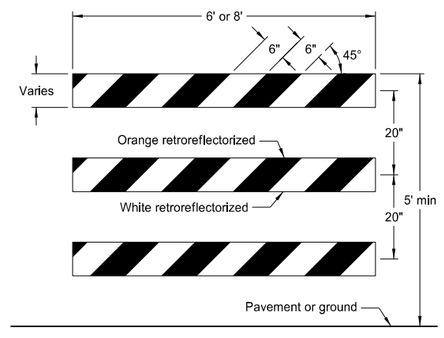

TYPE III BARRICADE

BARRICADE RAIL DETAILS

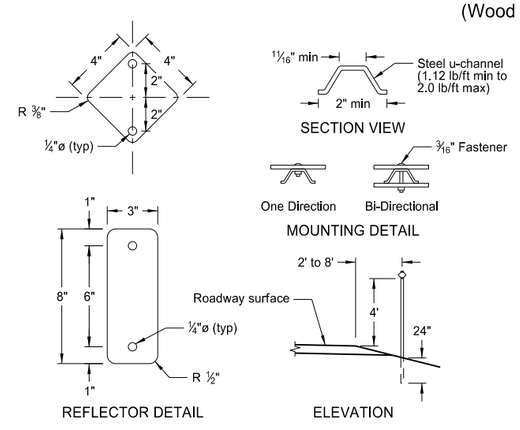

DELINEATORS

MINIMUM BALLAST
(For each side of barricade support)

Without Sign	4 - 25 lb sandbags
With Sign	6 - 25 lb sandbags

Note: The number of sandbags are based on a wind speed of 55 MPH. The sandbags are assumed to be placed at or near the ends of the skids.

NORTH DAKOTA DEPARTMENT OF TRANSPORTATION	
10-3-13	
REVISIONS	
DATE	CHANGE

This document was originally issued and sealed by Roger Weigel, Registration Number PE- 2930, on 10/3/13 and the original document is stored at the North Dakota Department of Transportation

CONSTRUCTION SIGN PUNCHING AND MOUNTING DETAILS

D-704-14

Note: Signs placed in sections with curb shall have a minimum horizontal clearance of 2' from the face of the curb to the near edge of the sign.

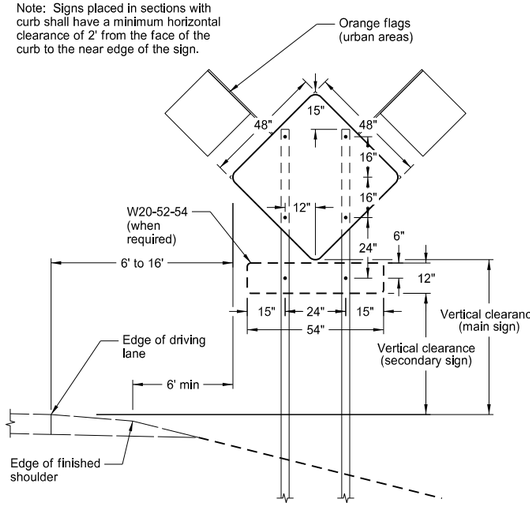

TYPICAL SECTION
(48" x 48" diamond warning sign shown)

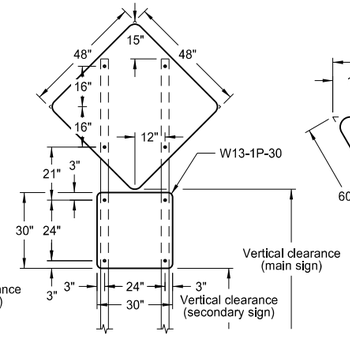

48" x 48" DIAMOND SIGN
(with 30" x 30" secondary sign)

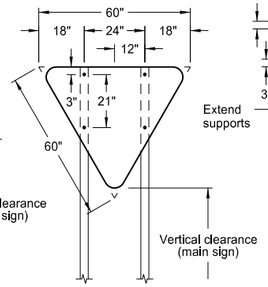

R1-2-60 - YIELD SIGN

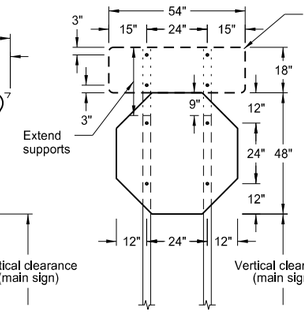

R1-1-48 - STOP SIGN
(with R6-1-54 sign as required)

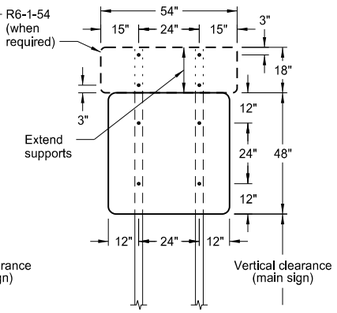

48" x 48" SIGN
(with R6-1-54 sign as required)

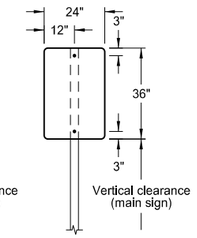

24" x 36" SIGN

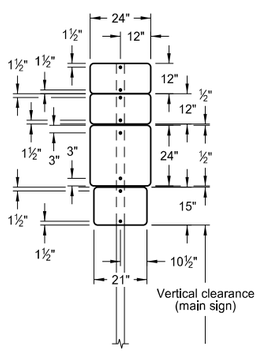

24" x 24"
ROUTE MARKER
ASSEMBLY

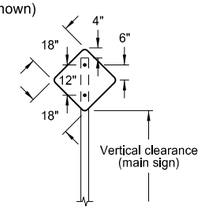

18" x 18"
DIAMOND SIGN

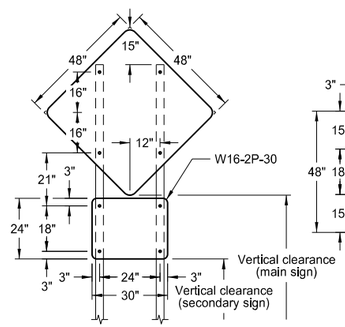

48" x 48" DIAMOND SIGN
(with 30" x 24" secondary sign)

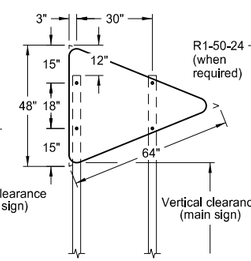

W14-3-64 - PENNANT SIGN

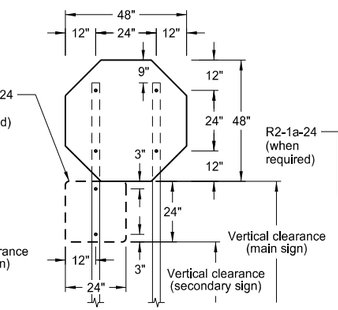

R1-1-48 - STOP SIGN
(with R1-50-24 sign as required)

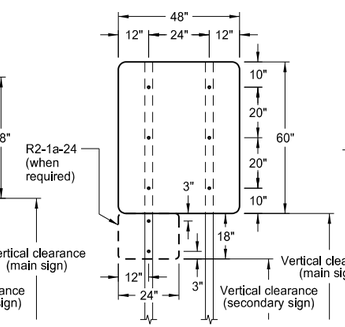

48" x 48" SIGN
(with R2-1a-24 sign as required)

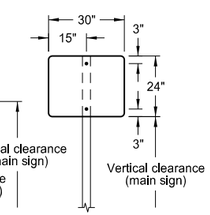

30" x 24" SIGN

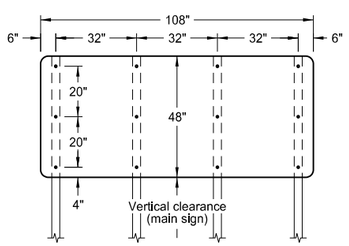

108" x 48" SIGN

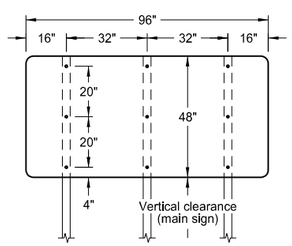

96" x 48" SIGN

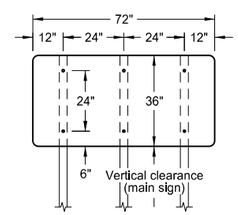

72" x 36" SIGN

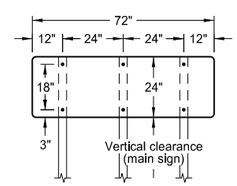

72" x 24" SIGN

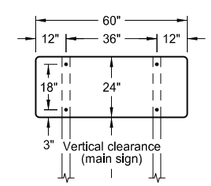

60" x 24" SIGN

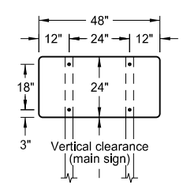

48" x 24" SIGN

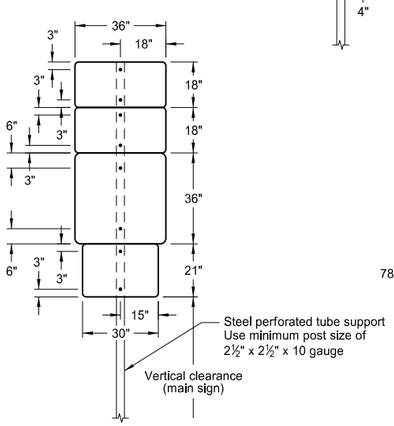

36" x 36"
ROUTE MARKER
ASSEMBLY

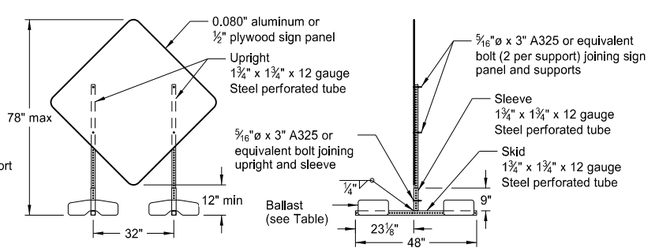

PORTABLE SIGN SUPPORT
LOW-MOUNTING HEIGHT

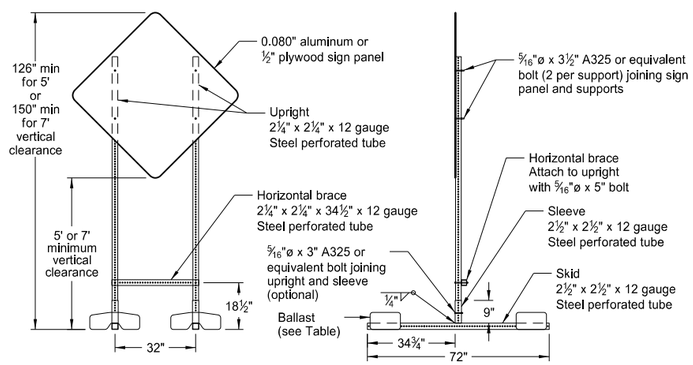

PORTABLE SIGN SUPPORT
HIGH-MOUNTING HEIGHT

NOTES:

1. Sign Supports: Supports shall be galvanized or painted. Minimum post sizes are 2.5 lb/ft u-channel or 2" x 2" x 12 gauge steel perforated tube, except where noted. When installing signs on u-channel, the minimum post size for assemblies containing a secondary sign is 3.0 lb/ft. Post sizes are based on a wind speed of 55 MPH.

   Signs over 50 square feet should be installed on 2½" x 2½" perforated tube supports as a minimum.

   Guy wires shall not be attached to sign supports. Wind beams may be attached to u-posts behind the sign panels.

2. Sign Panels: Provide sign panels made of 0.100" aluminum, ½" plywood, or other approved material, except where noted. All holes to be punched round for ⅜" bolts.

3. Alternate Messages: The signs that have alternate messages may have these alternate messages placed on a reflectorized plate (without a border) and installed and removed as required. (i.e. "Left" and "Right" message on a lane closure sign)

4. Route Marker Auxiliary Signs: Provide route marker auxiliary signs, such as the cardinal direction and directional arrows, with a background and legend that match the route marker they are used with:

   Interstate - white legend on blue background
   Interstate Business Loop - white legend on green background
   US and State - black legend on white background
   County - yellow legend on blue background

5. Vertical Clearance: Install signs with a vertical clearance of 5'-0" (see TYPICAL SECTION.) In areas where parking or pedestrian movements are likely or the view of the sign may be obstructed, install signs with a vertical clearance of 7'-0" from the top of the curb or from the near edge of the driving lane in absence of a curb.

   The vertical clearance to secondary signs is 1'-0" less than the vertical clearance as stated above.

   Large signs having an area exceeding 50 square feet shall have a minimum clearance of 7'-0" from the ground at the post.

6. Portable Signs: Provide portable signs that meet the vertical clearance as stated above. Use portable signs when it is necessary to place signs within the pavement surface.

   When portable signs are used for 5 days or less, low-mounting height (minimum 12" vertical clearance) sign supports may be used as long as the view of the sign is not obstructed. Time delays caused by unforseen circumstances, such as equipment breakdown, rain, subgrade failures, etc., will not accrue towards the 5 day period. The R9-8 through R9-11a series, W1-6 through W1-8 series, M4-10, and E5-1 may be used for longer than 5 days.

   Signs mounted to the portable sign supports shown in the LOW-MOUNTING HEIGHT and HIGH-MOUNTING HEIGHT Details shall have a maximum surface area of 16 square feet.

MINIMUM BALLAST
(For each side of sign support base)

Sign Panel Mounting Height (ft)	Number of 25 lb sandbags for 4' x 4' sign panel
1'	6
5'	8
7'	10

Note: The number of sandbags are based on a wind speed of 55 MPH. The sandbags are assumed to be placed at or near the ends of the skids.

NORTH DAKOTA DEPARTMENT OF TRANSPORTATION	
10-4-13	
REVISIONS	
DATE	CHANGE
11-14-13	Revised Note 6.

This document was originally issued and sealed by Roger Weigel, Registration Number PE- 2930, on 11/14/13 and the original document is stored at the North Dakota Department of Transportation

ROAD CLOSURE AND LANE CLOSURE ON A TWO WAY ROAD LAYOUTS

D-704-19

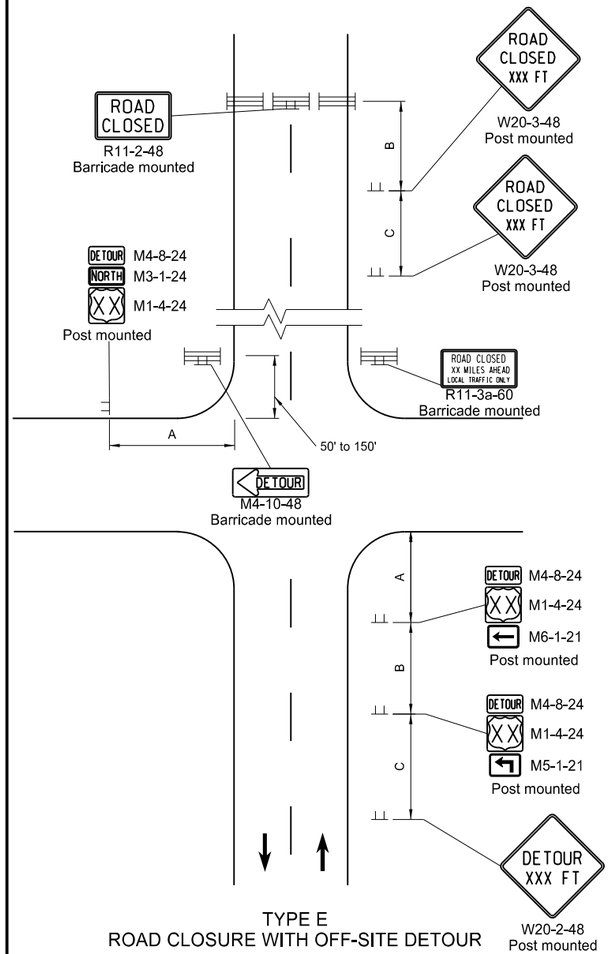

TYPE E
ROAD CLOSURE WITH OFF-SITE DETOUR

Used where a road is closed beyond a detour point. Signing shown for one direction only. Sign not shown on detour shall be shown in plans and installed and maintained by the contractor.

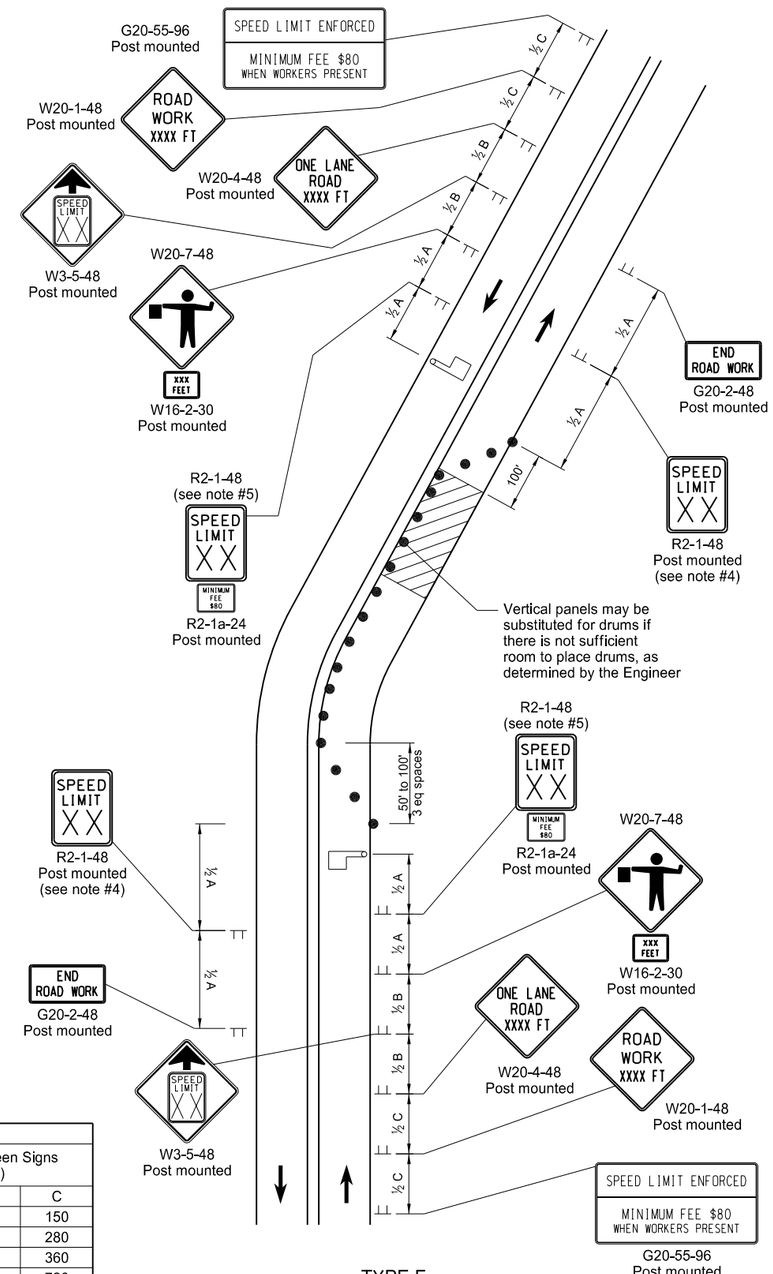

TYPE F
LANE CLOSURE ON A TWO LANE ROAD USING FLAGGERS

Two lane highway with one lane closed. Flagger is at a point where it is visible to approaching traffic.

Notes

1. Variables
   S = Numerical value of speed limit or 85th percentile.
   W = The width of taper
   L = Minimum length of taper, or S x W for freeways, expressways, and all other roads with speeds of 45 mph or greater, or
   W x $S^2/60$ for urban, residential, and other streets with speeds of 40 mph or less.
2. Barricades placed on roadway shall be on a moveable assembly. Signs placed on the roadway shall be placed on skid mounted assemblies.
3. Delineator drums used for tapering traffic shall be placed at 3 equal spaces. Delineator drums for tangents shall be spaced at 2 times dimension "S".
4. The speed limit shall be re-established. The exact speed limit shall be determined in the field, dependent on location and conditions.
5. The reduced speed limit shall be determined dependent on the in place speed limit before construction. The speed limit reduction should not exceed 10 mph below the existing speed limit, unless the design speed of the work zone feature has been reduced below the 10 mph. In this case, the speed limit reduction shall not exceed 30 MPH. Where speed limits are to be reduced more than 30 MPH, a second speed limit sign shall be installed with the desired speed reduction but shall not exceed 30 MPH. The second speed limit sign shall be placed at 1/2 B.
6. When warning signs are used in urban areas and the signs are not portable, flags shall be installed. The flags shall be 24 inches square, mounted perpendicular to the edges of the diamond sign, and at such a distance above the edge so that when the flag is limp it will not touch the sign. Rural areas will not require flags.
7. Existing speed limit signs within a reduced speed zone shall be covered.
8. Where necessary, safe speed to be determined by the Engineer.
9. The contractor has the option of using portable sign supports in lieu of post mounted signs in accordance with the NDDOT Standard Specifications.
10. G20-55-96 or R2-1a-24 sign are not required when a pilot car operation is used, if this standard is part of other traffic control layouts, or the work is less than 15 days.
11. When highway-rail grade crossings exist either within or in the vicinity of the roadway work activities:
    a. Extra care shall be taken to minimize the probability of conditions being created, either by lane restrictions, flagging or other operations, where vehicles might be stopped within the highway-rail grade crossing (considered as being 15 feet on either side of the closest and farthest rail.)
    b. A "Do Not Stop on Tracks" sign (R8-8-24) should be placed near the cross buck in each direction while the lane closure is in the vicinity of the tracks.
    c. A buffer space between the work zone and the lane closure transition should be extended upstream of the highway-rail grade crossing so a queue created by the flagging operation will not extend across the highway-rail grade crossing.
    d. If the queuing of vehicles across active rail tracks cannot be avoided, a flagger shall be provided at the highway-rail grade crossing to prevent vehicles from stopping within the highway-rail grade crossing, even if automatic warning devices are in place.

ADVANCE WARNING SIGN SPACING

Road Type	Distance Between Signs Min. (ft)		
	A	B	C
Urban - Low Speed (30 mph or less)	150	150	150
Urban - Low Speed (over 30 to 40mph)	280	280	280
Urban - High Speed (over 40 mph to 50 mph)	360	360	360
Rural - High Speed (over 50 mph to 65 mph)	720	720	720
Urban Expressway and Freeway (55 mph to 60 mph)	850	1350	2200
Rural Expressway and Freeway (70 mph to 75 mph)	1000	1500	2640
Interstate/4-Lane Divided (Maintenance and Surveying)	750	1000	1500

KEY

- Delineator Drum
- Type III Barricade
- Flagger
- Sign
- Work/Hazard Area

NORTH DAKOTA DEPARTMENT OF TRANSPORTATION

9-27-13

REVISIONS

DATE	CHANGE
3-13-14	Revised Sign Cell "ROAD WORK XXX FT"

This document was originally issued and sealed by Roger Weigel Registration Number PE-2930, on 03/13/14 and the original document is stored at the North Dakota Department of Transportation

D-704-20

TERMINAL AND SEAL COAT SIGN LAYOUTS

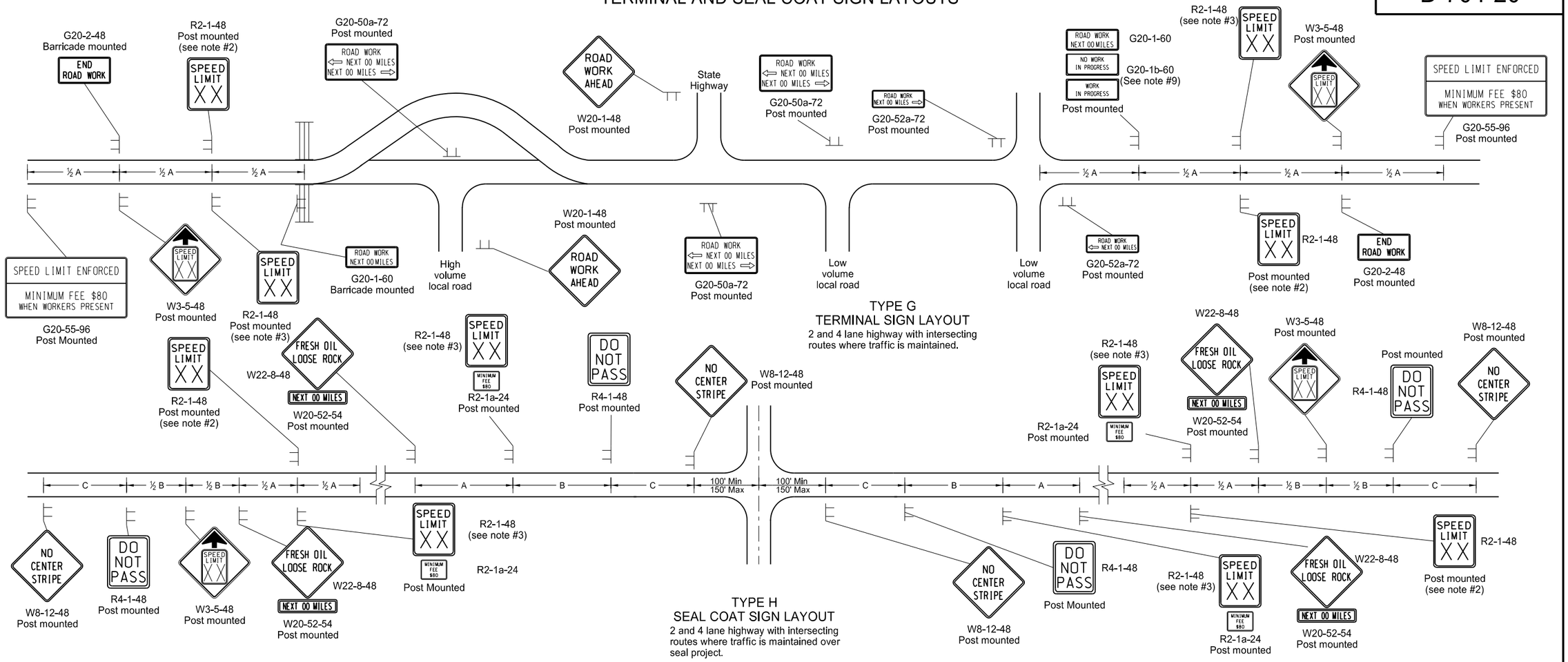

TYPE G
TERMINAL SIGN LAYOUT

2 and 4 lane highway with intersecting routes where traffic is maintained.

TYPE H
SEAL COAT SIGN LAYOUT

2 and 4 lane highway with intersecting routes where traffic is maintained over seal project.

KEY

Type III barricade

Sign

1. Barricades placed on roadway shall be on a moveable assembly. Signs placed on the roadway shall be placed on skid mounted assemblies.
2. The speed limit shall be re-established. The exact speed limit shall be determined in the field, dependent on location and conditions.
3. The reduced speed limit shall be determined dependent on the in place speed limit before construction. The speed limit reduction should not exceed 10 MPH below the existing speed limit, unless the design speed of the work zone feature has been reduced below the 10 MPH. In this case, the speed limit reduction shall not exceed 30 MPH. Where speed limits are to be reduced more than 30 MPH, a second speed limit sign shall be installed with the desired speed reduction but shall not exceed 30 MPH. The second speed limit sign shall be placed at ½ B.
4. When warning signs are used in urban areas and the signs are not portable, flags shall be installed. The flags shall be 24 inches square, mounted perpendicular to the edges of the diamond sign, and at such a distance above the edge so that when the flag is limp it will not touch the sign. Rural areas will not require flags.
5. Existing speed limit signs within a reduced speed zone shall be covered.
6. On seal projects, signs R2-1-48, R2-1a-24, R4-1-48, W22-8-48 and W20-52-54 shall be placed just after all important intersections and at five mile intervals thereafter. Sign W8-12-48 shall be placed just after all important intersections and at 2 mile intervals thereafter until the short term center line pavement marking is in place. No short term pavement markings are placed when traffic volumes are 750 ADT or less.
7. The contractor has the option of using portable sign supports in lieu of post mounted signs in accordance with the NDDOT Standard Specifications.
8. Type H construction sign traffic control shall have the speed limit signs covered or removed once the loose aggregate has been removed.
9. The contractor shall install the G20-1b-60 sign when work is suspended for winter.
10. Other traffic control layouts will be required in the immediate work areas. If the speed limit is reduced in the work area, speed limit signs shall have the R2-1a-24 sign placed below.
11. G20-55-96 sign is not required if work is less than 15 days.

ADVANCE WARNING SIGN SPACING

Road Type	Distance Between Signs Min. (ft)		
	A	B	C
Urban - Low Speed (30 mph or less)	150	150	150
Urban - Low Speed (over 30 to 40 mph)	280	280	280
Urban - High Speed (over 40 mph to 50 mph)	360	360	360
Rural - High Speed (over 50 mph to 65 mph)	720	720	720
Urban Expressway and Freeway (55 mph to 60 mph)	850	1350	2200
Rural Expressway and Freeway (70 mph to 75 mph)	1000	1500	2640
Interstate/4-Lane Divided (Maintenance and Surveying)	750	1000	1500

NORTH DAKOTA DEPARTMENT OF TRANSPORTATION

9-27-13

REVISIONS

DATE	CHANGE

This document was originally issued and sealed by Roger Weigel Registration Number PE- 2930, on 09/27/13 and the original document is stored at the North Dakota Department of Transportation

SHOULDER CLOSURES AND BRIDGE PAINTING LAYOUTS

D-704-24

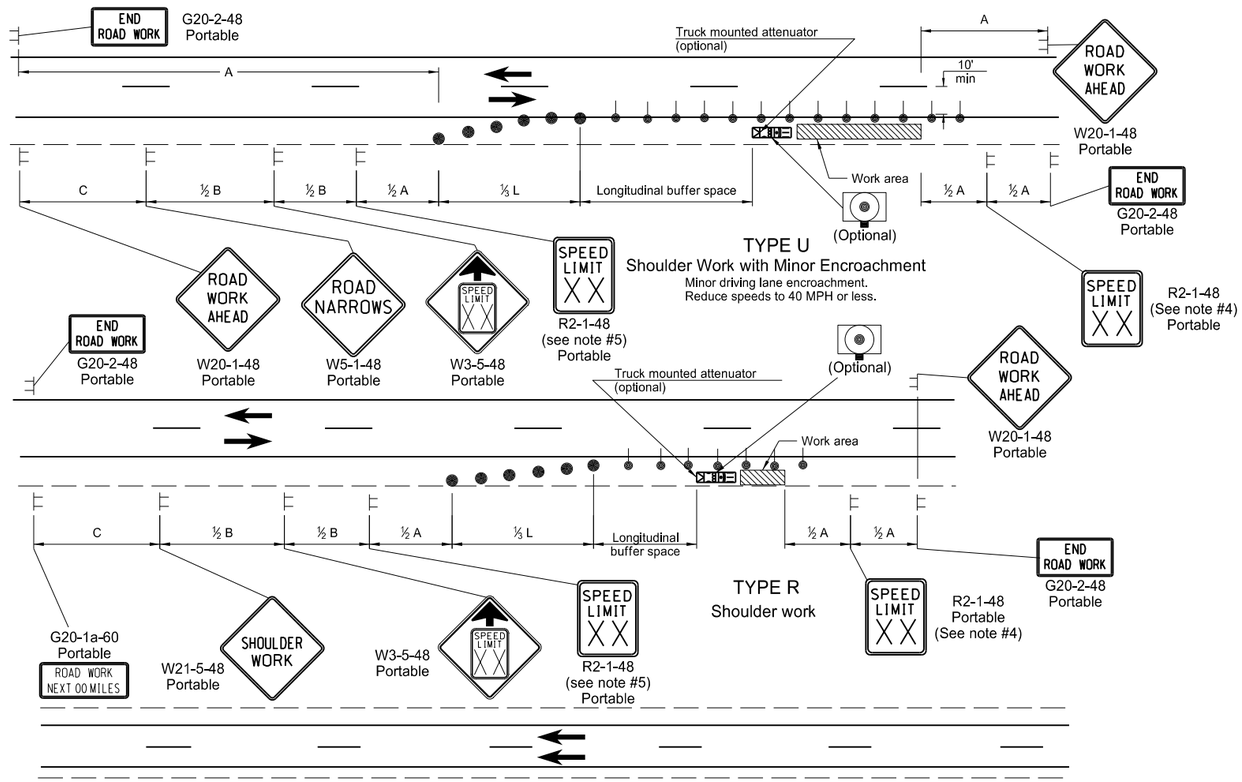

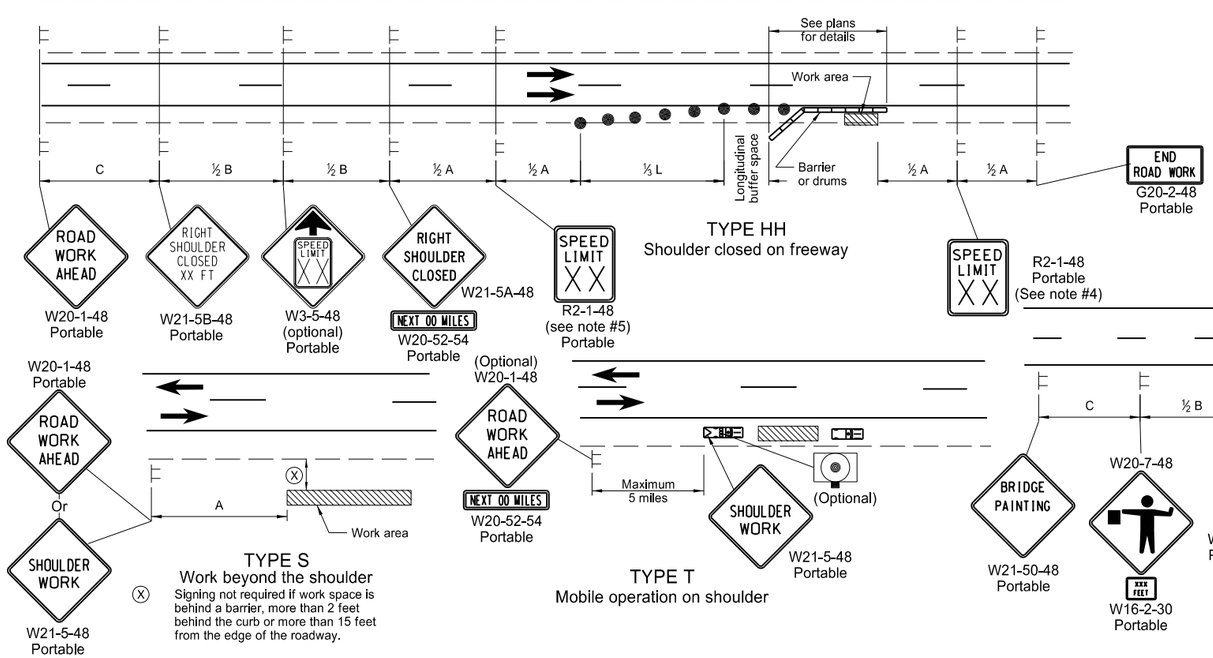

Notes

1. Variables
   S = Numerical value of speed limit or 85th percentile.
   W = The width of the taper.
   L = Minimum length of taper, or S x W for freeways, expressways, and all other roads with speeds of 45 mph or greater, or W x S^2 /60 for urban, residential, and other streets with speeds of 40 mph or less.
2. Delineator drums used for tapering traffic shall be spaced at dimension "S".
   Delineator drums or tubular markers used for tangents shall be spaced at 2 times "S".
3. Sequencing Arrow Panels
   Type A shall be used on roadways with slow moving traffic speeds and low volume (25 mph or less and 750 ADT or less).
   Type B shall be used on roadways with moderate traffic speeds and volumes (40 mph or less and 5000 ADT or less).
   Type C shall be used on roadways with high traffic speeds and volumes (over 40 mph or over 5000 ADT).
4. The speed limit shall be re-established. The exact speed limit shall be determined in the field, dependent on location and conditions.
5. The reduced speed limit shall be determined dependent on the in place speed limit before construction. The speed limit reduction should not exceed 10 mph below the existing speed limit, unless the design speed of the work zone feature has been reduced below the 10 mph. In this case, the speed limit reduction shall not exceed 30 MPH. Where speed limits are to be reduced more than 30 MPH, a second speed limit sign shall be installed with the desired speed reduction but shall not exceed 30 MPH. The second speed limit sign shall be placed at ½B.
6. When warning signs are used in urban areas and the signs are not portable, flags shall be installed. The flags shall be 24 inches square, mounted perpendicular to the edges of the diamond sign, and at such a distance above the edge so that when the flag is limp it will not touch the sign. Rural areas will not require flags.
7. Existing speed limit signs within a reduced speed zone shall be covered.
8. The contractor has the option of using portable sign supports in lieu of post mounted signs in accordance with the NDDOT Standard Specifications.

Longitudinal Buffer Space	
Speed (mph)	Length Min (feet)
20	115
25	155
30	200
35	250
40	305
45	360
50	425
55	495
60	570
65	645
70	730
75	820

ADVANCE WARNING SIGN SPACING			
Road Type	Distance Between Signs Min. (ft)		
	A	B	C
Urban - Low Speed (30 mph or less)	150	150	150
Urban - Low Speed (over 30 to 40 mph)	280	280	280
Urban - High Speed (over 40 mph to 50 mph)	360	360	360
Rural - High Speed (over 50 mph to 65 mph)	720	720	720
Urban Expressway and Freeway (55 mph to 60 mph)	850	1350	2200
Rural Expressway and Freeway (70 mph to 75 mph)	1000	1500	2640
Interstate/4-Lane Divided (Maintenance and Surveying)	750	1000	1500

KEY

- Sign
- Work area
- Delineator Drum
- Tubular Marker
- Sequencing Arrow Panel (Caution Mode)

NORTH DAKOTA DEPARTMENT OF TRANSPORTATION

9-27-13

REVISIONS

DATE	CHANGE

This document was originally issued and sealed by Roger Weigel Registration Number PE- 2930, on 09/27/13 and the original document is stored at the North Dakota Department of Transportation

MISCELLANEOUS SIGN LAYOUTS

D-704-26

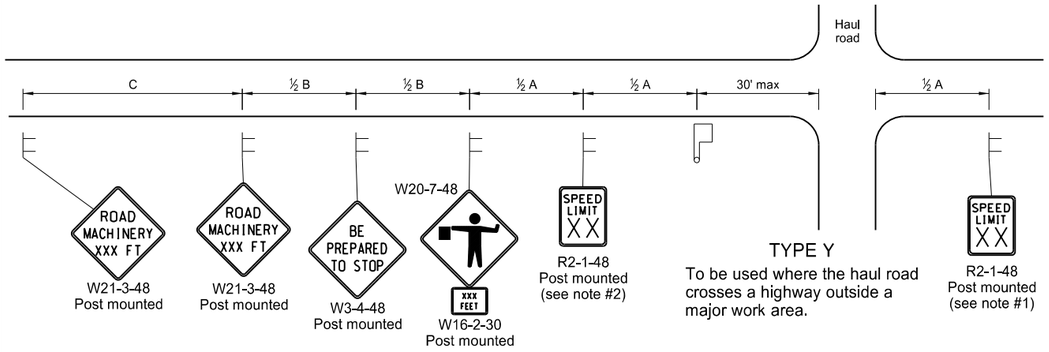

TYPE Y

To be used where the haul road crosses a highway outside a major work area.

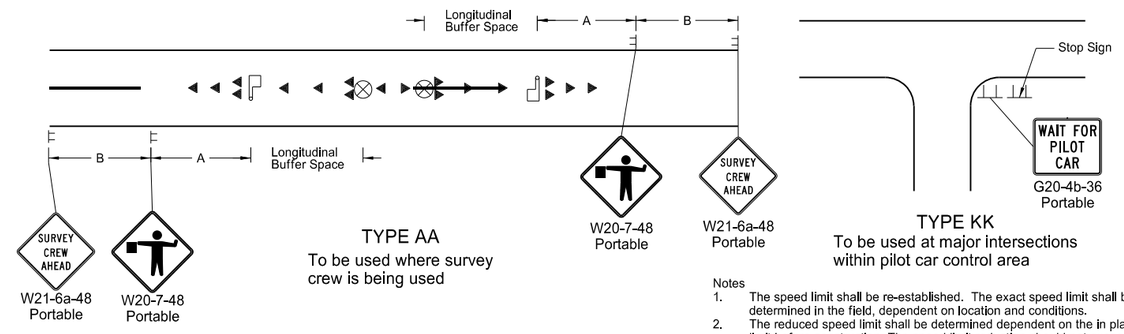

TYPE AA

To be used where survey crew is being used

TYPE KK

To be used at major intersections within pilot car control area

Notes

1. The speed limit shall be re-established. The exact speed limit shall be determined in the field, dependent on location and conditions.
2. The reduced speed limit shall be determined dependent on the in place speed limit before construction. The speed limit reduction should not exceed 10 mph below the existing speed limit, unless the design speed of the work zone feature has been reduced below the 10 mph. In this case, the speed limit reduction shall not exceed 30 MPH. Where speed limits are to be reduced more than 30 MPH, a second speed limit sign shall be installed with the desired speed reduction but shall not exceed 30 MPH. The second speed limit sign shall be placed at ½ B.
3. When warning signs are used in urban areas and the signs are not portable, flags shall be installed. The flags shall be 24 inches square, mounted perpendicular to the edges of the diamond sign, and at such a distance above the edge so that when the flag is limp it will not touch the sign. Rural areas will not require flags.
4. Existing speed limit signs within a reduced speed zone shall be covered.
5. The contractor has the option of using portable sign supports in lieu of post mounted signs in accordance with the NDDOT Standard Specifications.
6. G20-55-96 signs are not required if this standard is part of other traffic control layouts, or the work is less than 15 days.
7. When a pilot car operation is used, place a G20-4b-36 "Wait For Pilot Car" sign at major intersections within pilot car control area.

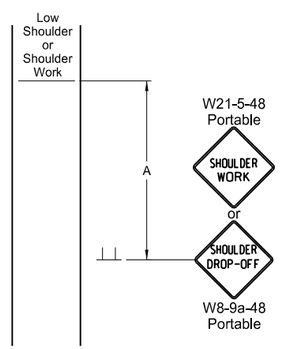

TYPE BB

To be used within a major work area where the sign conditions exist

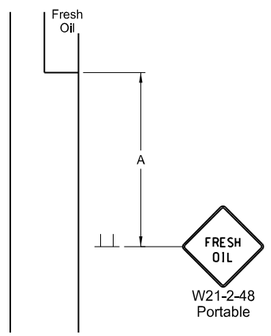

TYPE CC

To be used where the sign conditions exist

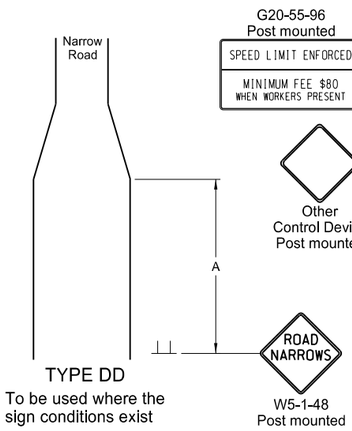

TYPE DD

To be used where the sign conditions exist

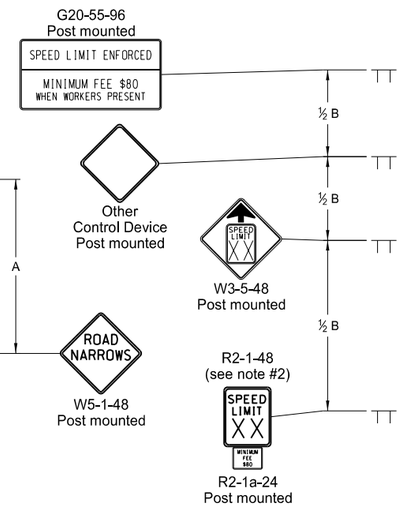

TYPE Z

To be used where speed zone is needed

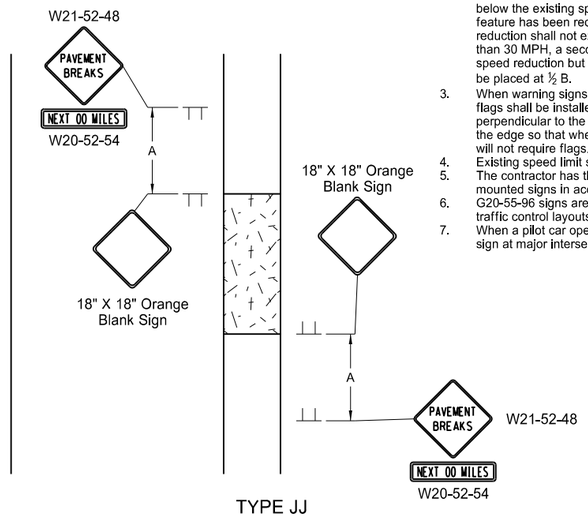

TYPE JJ

To be used where there is a break in the pavement. These signs may be skid mounted or post mounted and shall be installed when conditions exist and removed when not applicable.

Longitudinal Buffer Space	
*Speed (mph)	Length Min (feet)
20	115
25	155
30	200
35	250
40	305
45	360
50	425
55	495
60	570
65	645
70	730
75	820

* Posted speed, off-peak 85th percentile speed prior to work starting, or the anticipated operating speed in mph.

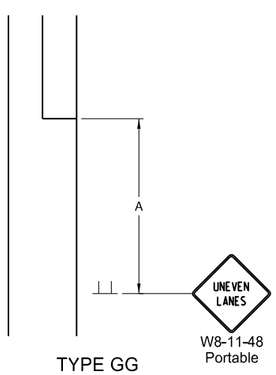

TYPE GG

To be used where a difference of elevation between lanes exist

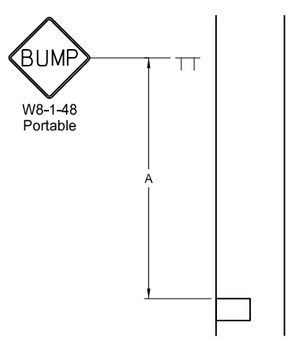

TYPE EE

To be used where the sign conditions exist

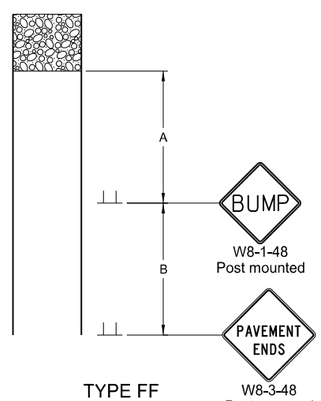

TYPE FF

To be used where the sign conditions exist

ADVANCE WARNING SIGN SPACING			
Road Type	Distance Between Signs Min. (ft)		
	A	B	C
Urban - Low Speed (30 mph or less)	150	150	150
Urban - Low Speed (over 30 to 40 mph)	280	280	280
Urban - High Speed (over 40 mph to 50 mph)	360	360	360
Rural - High Speed (over 50 mph to 65 mph)	720	720	720
Urban Expressway and Freeway (55 mph to 60 mph)	850	1350	2200
Rural Expressway and Freeway (70 mph to 75 mph)	1000	1500	2640
Interstate/4-Lane Divided (Maintenance and Surveying)	750	1000	1500

KEY

Sign — Flagger

Cones

NORTH DAKOTA DEPARTMENT OF TRANSPORTATION	
9-27-13	
REVISIONS	
DATE	CHANGE

This document was originally issued and sealed by Roger Weigel Registration Number PE- 2930, on 09/27/13 and the original document is stored at the North Dakota Department of Transportation

TRAFFIC CONTROL PLAN FOR MOVING OPERATIONS

D-704-27

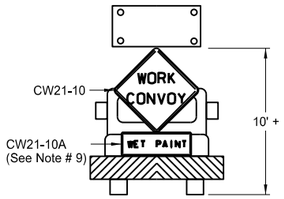

Typical Shadow Vehicle 1
Two-Way Roaday

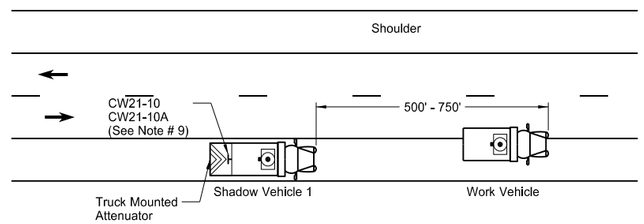

Two-Way Roadway with Paved Shoulders

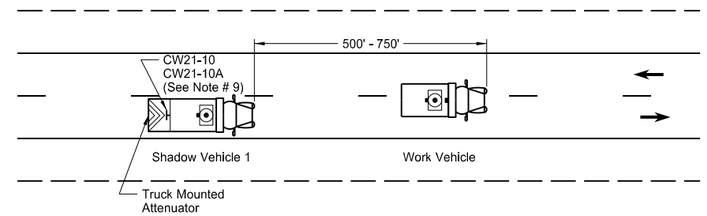

Two-Way Roadway without Paved Shoulders

Notes

1. If the contractor chooses to place more vehicles in the convoy than are shown, these vehicles shall have the truck mounted attenuator and shall be at the contractor's expense.
2. Shadow and work vehicles shall display yellow rotating beacons or strobe lights unless otherwise stated elsewhere in the plans.
3. Flashing arrow panels shall be Type B or Type C. The panel operation shall be controlled from inside the vehicle.
4. Each vehicle shall have two-way electronic communication capability.
5. When work convoys must change lanes, shadow vehicle 1 should change lanes first to shadow other convoy vehicles.
6. Vehicle spacing between the shadow vehicle 1 and shadow vehicle 2 will vary depending on sight distance restrictions. Motorists approaching the work convoy should be able to see the trail vehicle in time to slow down and/or change lanes as they approach the shadow vehicle.
7. Sign Colors
   Letters = Black
   Border = Black
   Background = Orange
8. Shadow vehicle 2 may be used as the paint tender vehicle.
9. Sign CW21-10A shall only be used during a painting operation.
10. On two lane - two way roadways, the work and shadow vehicles should pull over periodically to allow motor vehicle traffic to pass.

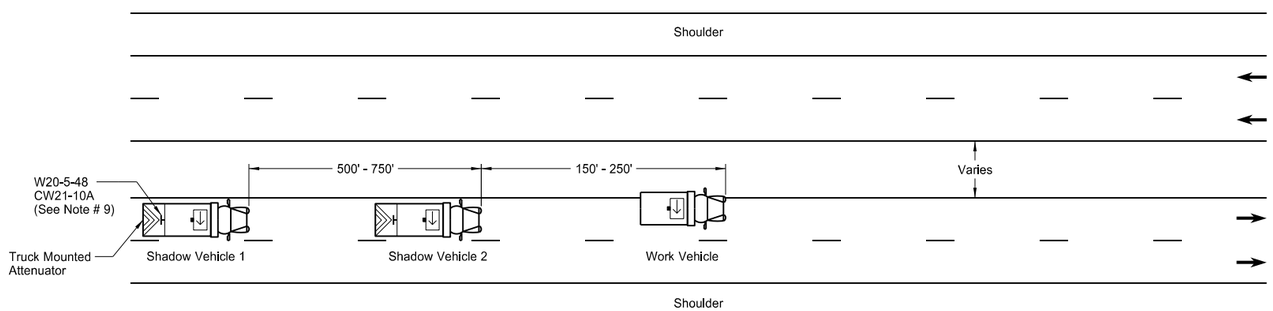

Undivided Multi-Lane Roadway

Sign Details

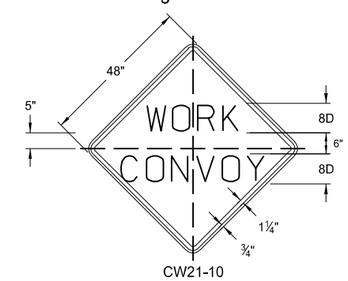

CW21-10

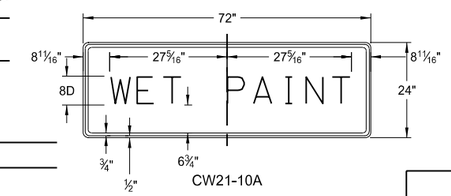

CW21-10A

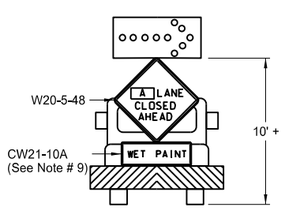

Typical Shadow Vehicle 1 & 2
Multi-Lane Highways

A = Left Right Center

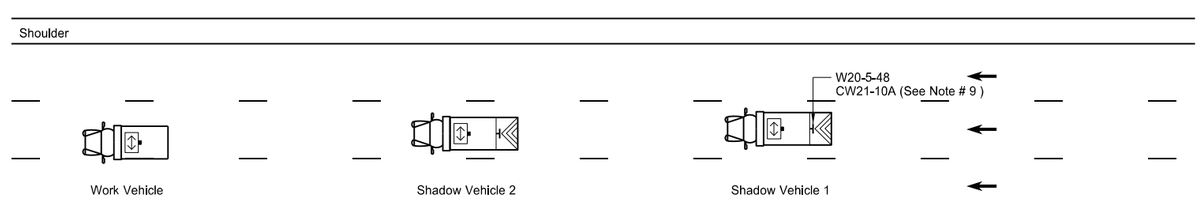

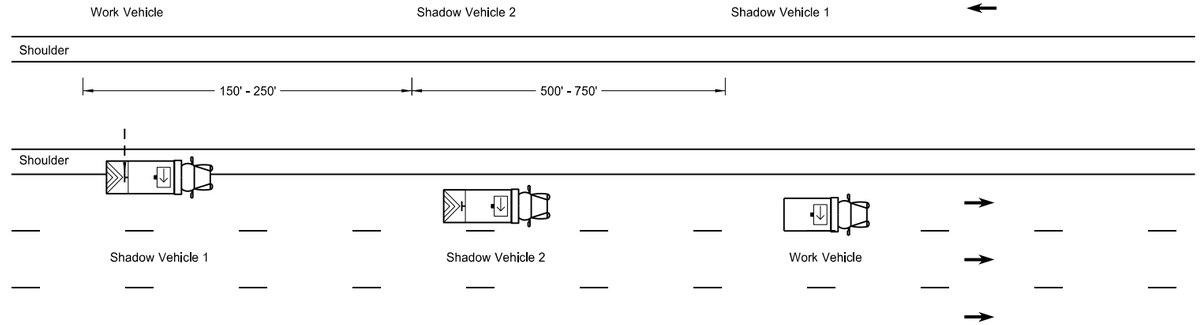

Divided Multi-Lane Highway

KEY

- Sign
- Truck mounted attenuator
- Flashing arrow panels:
  - Right directional
  - Left directional
  - Double arrow directional
  - Caution Mode

NORTH DAKOTA DEPARTMENT OF TRANSPORTATION	
9-27-13	
REVISIONS	
DATE	CHANGE
6-18-14	Removed shadow vehicle 2 on two lane roadways

This document was originally issued and sealed by Roger Weigel Registration Number PE- 2930, on 06/18/14 and the original document is stored at the North Dakota Department of Transportation

PORTABLE SIGN SUPPORT ASSEMBLY

D-704-50

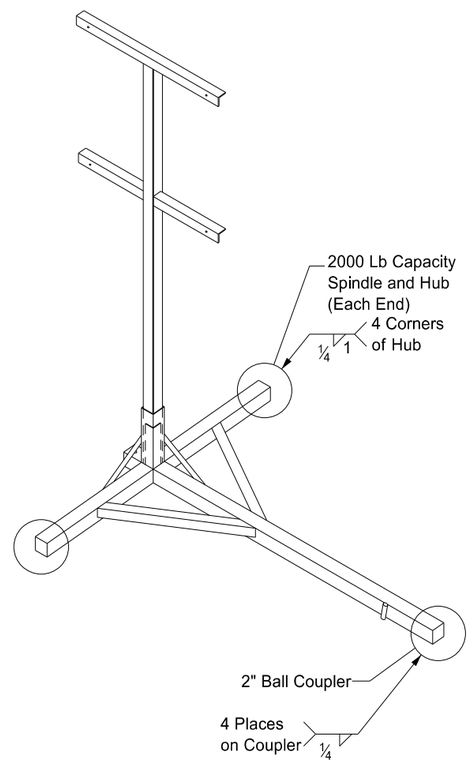

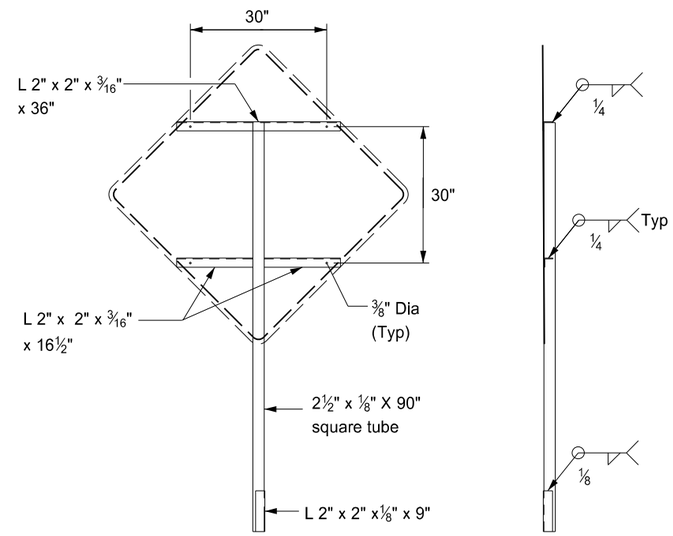

FRONT

RIGHT

SIGN SUPPORT

Notes:

1. The maximum weight of the assembly is 250 pounds.
2. Use a 14" wheel and tire.
3. Automotive and equipment axle assemblies may not be used for trailer-mounted sign supports.
4. Other NCHRP 350 crash tested assemblies are acceptable.

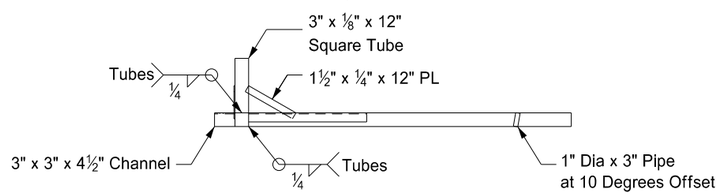

FRONT

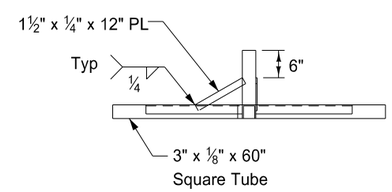

RIGHT

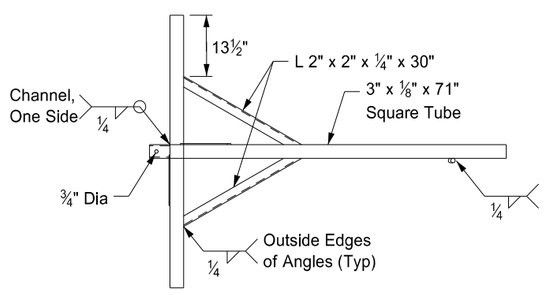

TOP

TRAILER

NORTH DAKOTA DEPARTMENT OF TRANSPORTATION	
11-23-10	
REVISIONS	
DATE	CHANGE

This document was originally issued and sealed by Roger Weigel Registration Number PE- 2930 , on 11/23/10 and the original document is stored at the North Dakota Department of Transportation

MOBILE OPERATION
Grinding Shoulder Rumble Strips

D-704-56

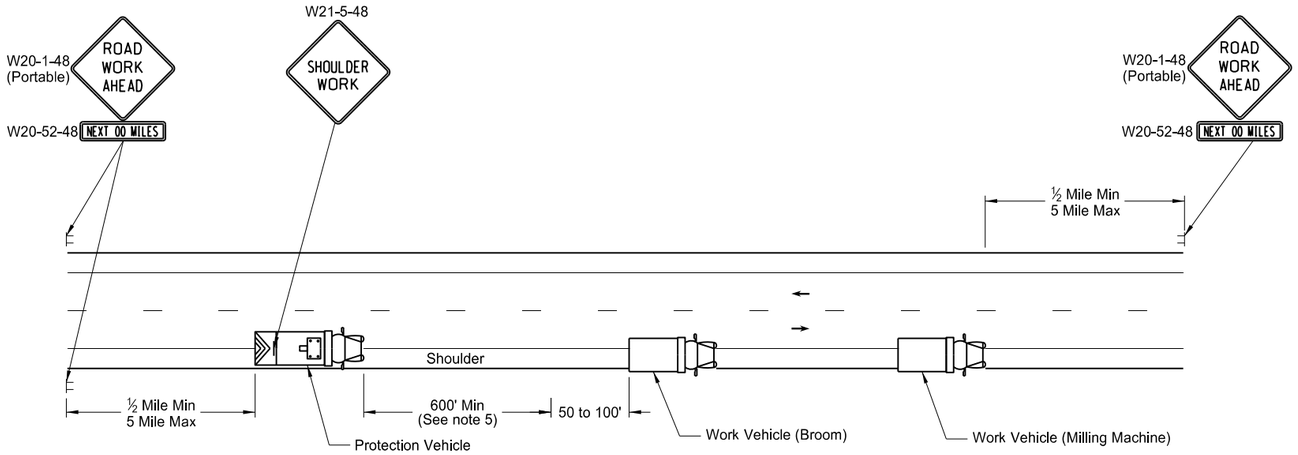

TWO LANE - TWO WAY ROADWAY

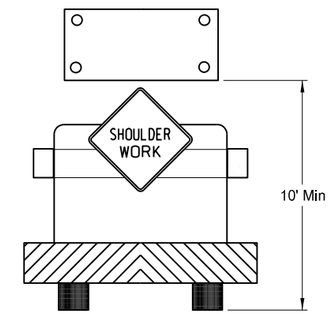

TWO LANE - TWO WAY ROADWAY

Typical Protection Vehicle with
Flashing Arrow Panel In Caution Mode

Notes:

1. If the contractor chooses to place more vehicles in the convoy than are shown, these vehicles shall have the truck mounted attenuator and shall be at the contractors expense.
2. Vehicles shall have a rotating, flashing, oscillating or strobe lights.
3. Flashing arrow panels shall be Type B or Type C. The panel operation shall be controlled from inside the vehicle.
4. Each vehicle shall have two - way electronic communication capability.
5. Vehicle spacing between the protection vehicle and work vehicle will vary depending on sight distance restrictions. Motorists approaching the work convoy should be able to see the protection vehicle in time to slow down and safely pass the work vehicles.
6. ROAD WORK AHEAD SIGN: Advance Road Work Ahead signs shall be moved as the work area moves through the construction zone.
7. Next XX Miles sign required when the distance from Road Work Ahead sign to the work location is two miles or greater.

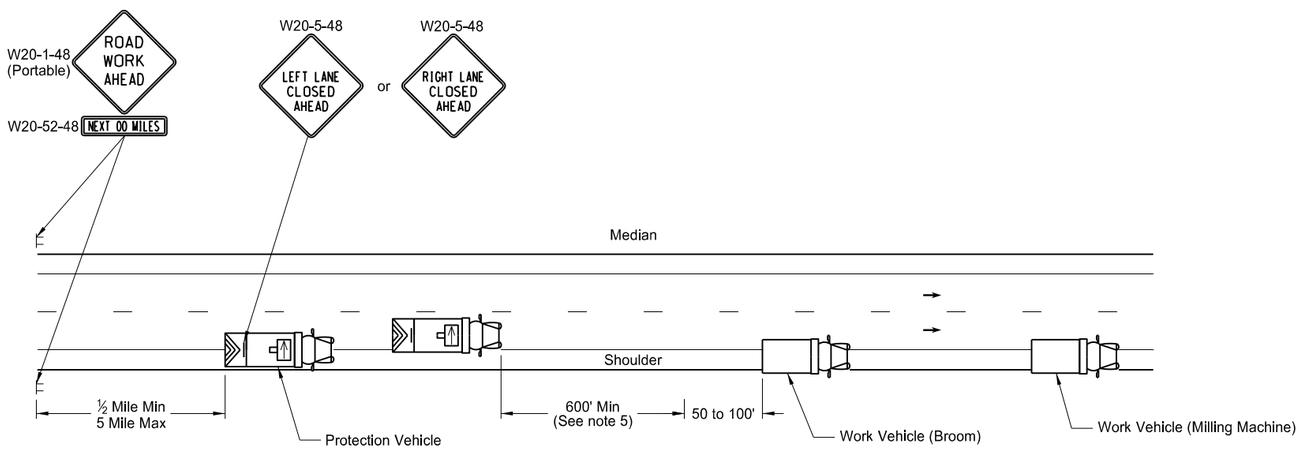

INTERSTATE & 4 LANE DIVIDED HIGHWAY

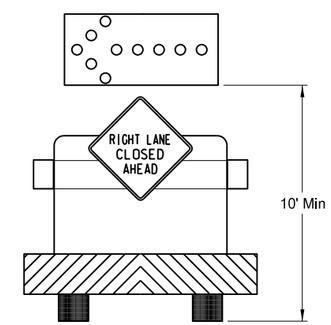

INTERSTATE & 4 LANE DIVIDED HIGHWAY

Typical Protection Vehicle with Flashing Arrow
Panel In Flashing Arrow Mode

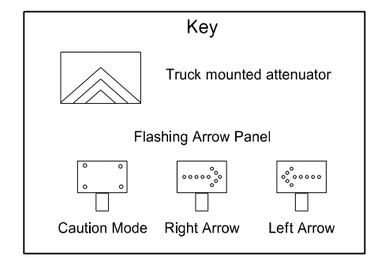

NORTH DAKOTA DEPARTMENT OF TRANSPORTATION	
11-15-12	
REVISIONS	
DATE	CHANGE

This document was originally issued and sealed by Roger Weigel Registration Number PE- 2930, on 11/15/12 and the original document is stored at the North Dakota Department of Transportation

BITUMINOUS LABORATORY

D-706-1

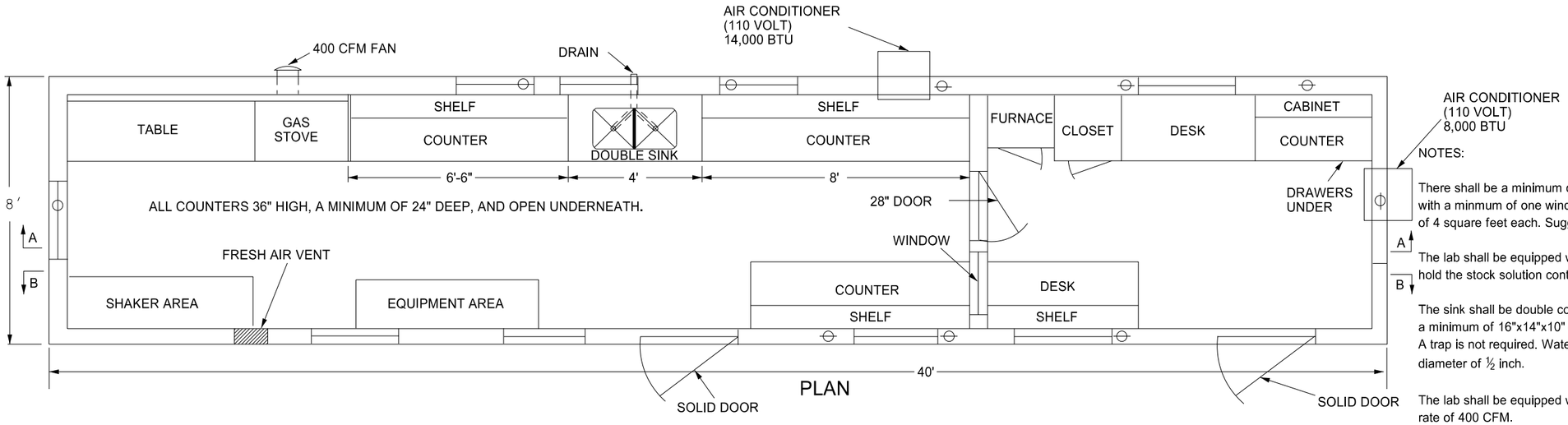

PLAN

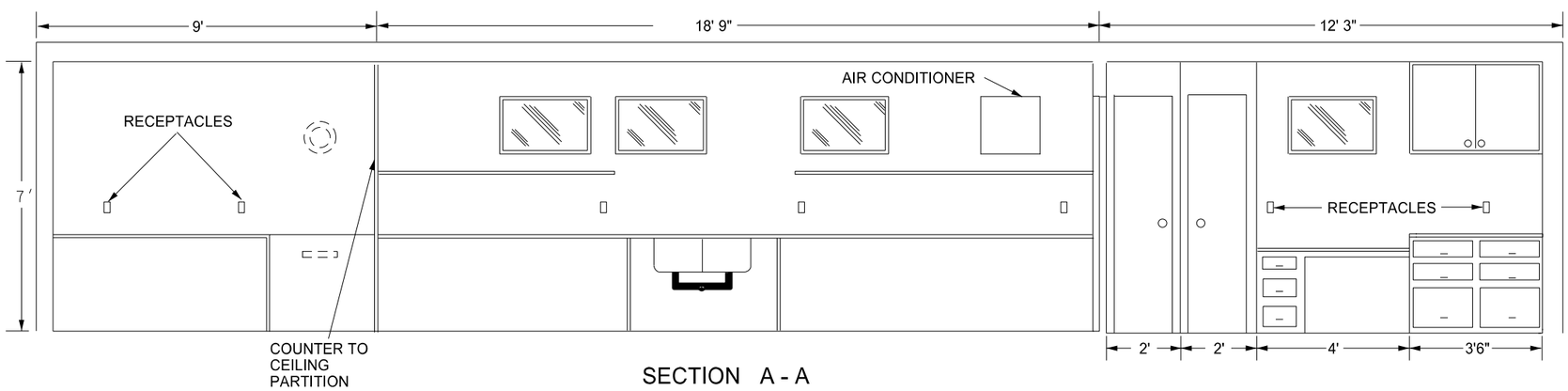

SECTION A - A

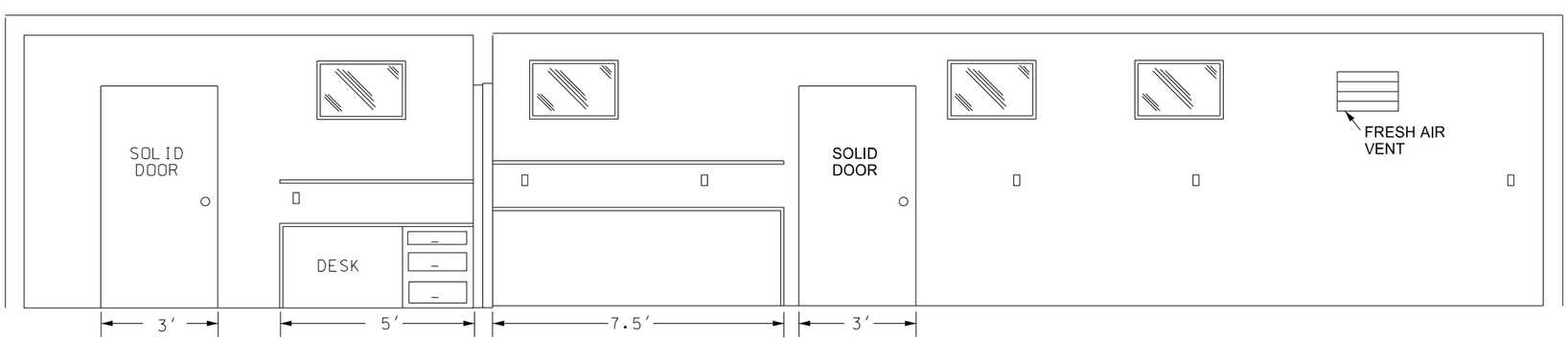

SECTION B - B

NOTES:

There shall be a minimum of six screened exterior windows on two or more sides, with a minmum of one window in each room. Windows shall have a minimum area of 4 square feet each. Suggested locations are shown on drawing.

The lab shall be equipped with a 1'x1' shelf at 36" above the regular countertop to hold the stock solution container for the Sand Equivalent test.

The sink shall be double compartment stainless steel. Each compartment shall be a minimum of 16"x14"x10" deep. The sink shall be drained to an outside waste line. A trap is not required. Water service lines shall be copper or plastic having a diameter of ½ inch.

The lab shall be equipped with an exhaust fan capable of removing inside air at a rate of 400 CFM.

The fresh air vent shall be hinged to open or close manually.

24" x 48" table shall be provided capable of holding a 200 lb. masonry saw. The table shall have a minimum clearance of 36" overhead.

The water supply tank shall have a capacity of 500 gallons.

Steps and a landing for each set of steps shall be provided for each of two entrance doors. Steps for each area shall be made of, or covered with, a material providing for a non-slip surface. They shall be heavy duty steps that are capable of withstanding heavy loadings and extensive use.

The pressure tank on the pump shall be 20 gallon capacity.

Locks, latches, and hinges for main doors shall be heavy duty type to withstand the intense use in service.

The wall between the office and the work area shall be properly insulated to prevent the transmission of heat and noise.

The floor beneath the marshall area shall be heavily reinforced.

The lab shall be equipped with steel cable tie downs and ground anchors at each corner of the lab.

Electrical service entrance shall be wired for 100 amps, and have separate circuits for air conditioners. Convenience outlets shall have a minimum spacing of four feet in counter areas.

NORTH DAKOTA DEPARTMENT OF TRANSPORTATION	
10-03-13	
REVISIONS	
DATE	CHANGE
07-30-14	Changed standard's title and revised notes.

This document was originally issued and sealed by Roger Weigel Registration Number PE- 2930, on 07/30/14 and the original document is stored at the North Dakota Department of Transportation

EROSION AND SILTATION CONTROLS
MEDIAN OR DITCH INLET PROTECTION

D-708-6

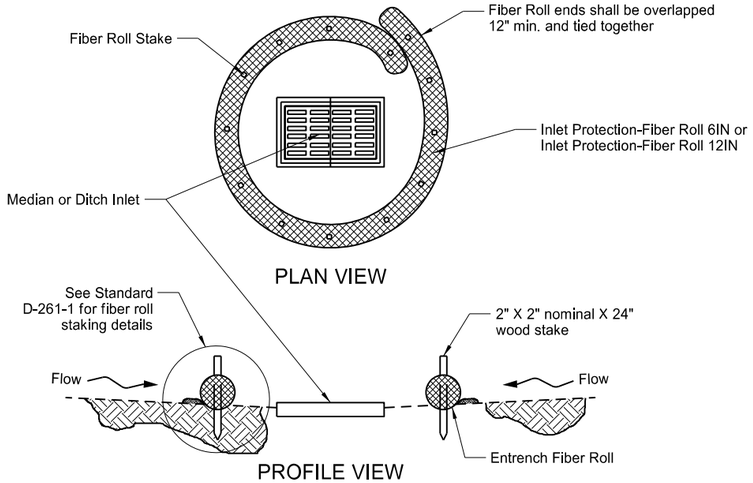

FIBER ROLL PROTECTION (MEDIAN OR DITCH INLET)

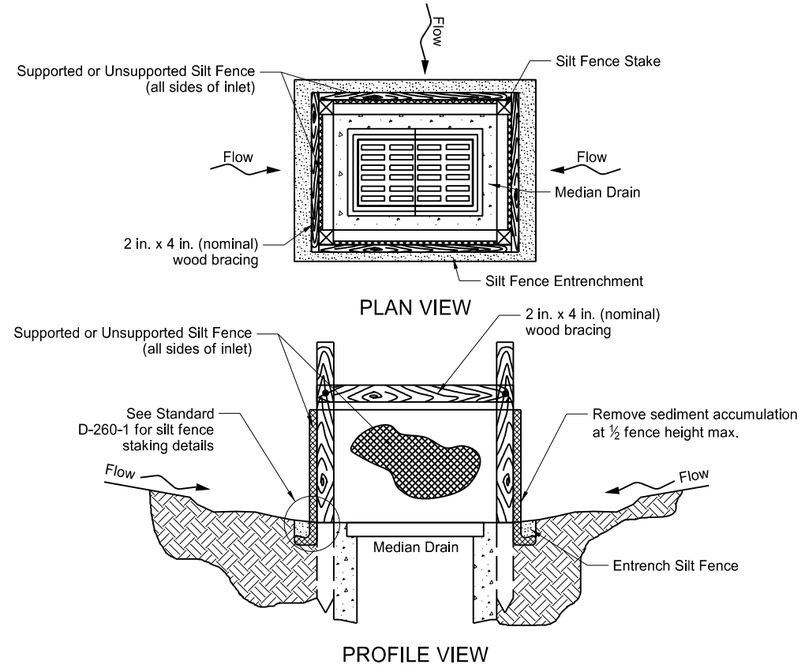

SILT FENCE PROTECTION (MEDIAN OR DITCH INLET)

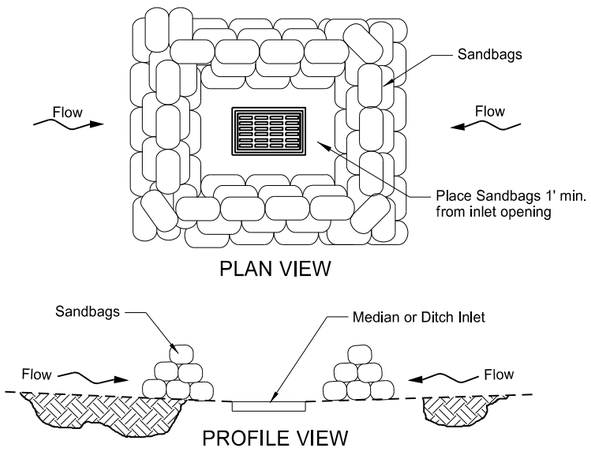

SANDBAG PROTECTION (LOW POINT)

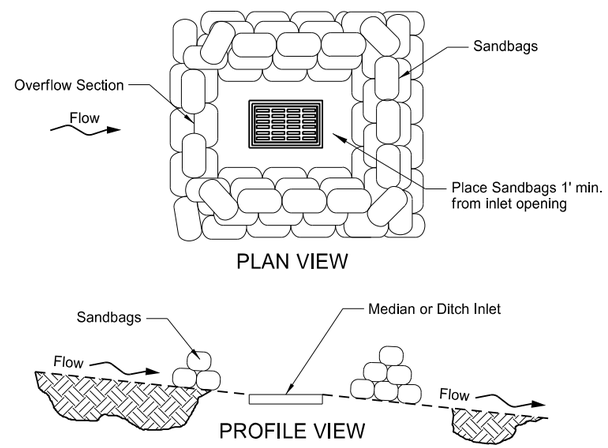

SANDBAG PROTECTION (ON SLOPE)

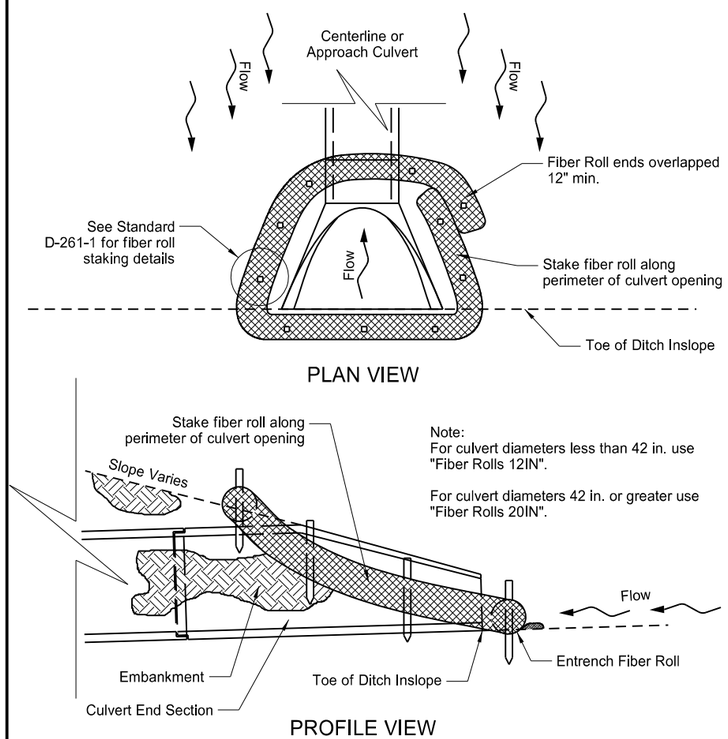

FIBER ROLL PROTECTION (INLET OF CULVERT)

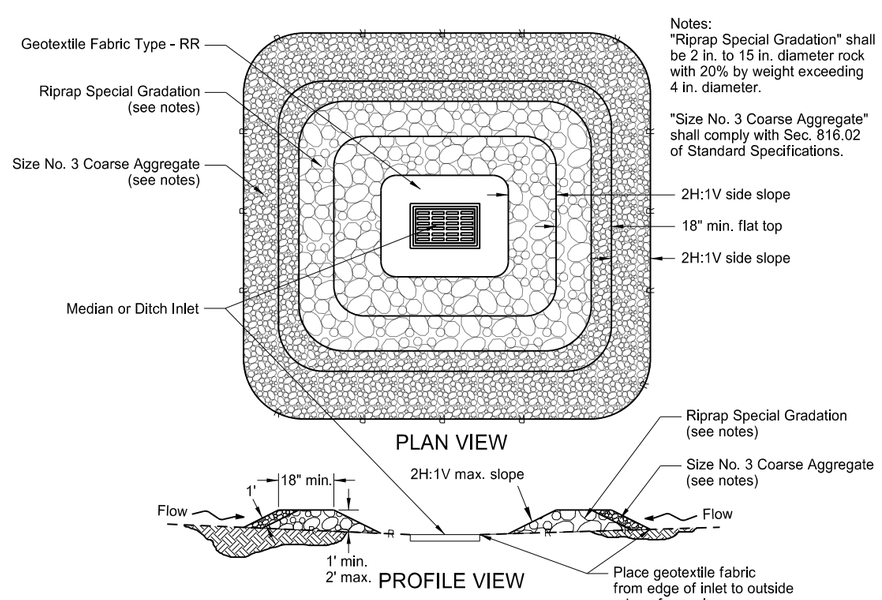

GRAVEL INLET PROTECTION (MEDIAN OR DITCH INLET)

NORTH DAKOTA DEPARTMENT OF TRANSPORTATION	
10-03-13	
REVISIONS	
DATE	CHANGE
06-26-14	Updated reference to standard drawing number for fiber roll staking details.
10-01-14	Updated reference to standard drawing number for silt fence.

This document was originally issued and sealed by Roger Weigel Registration Number PE-2930, on 10/01/14 and the original document is stored at the North Dakota Department of Transportation

REINFORCED CONCRETE PIPE CULVERTS AND END SECTIONS
(Round Pipe)

D-714-1

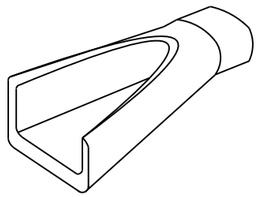

PERSPECTIVE

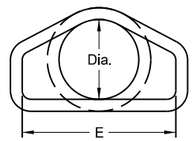

END VIEW

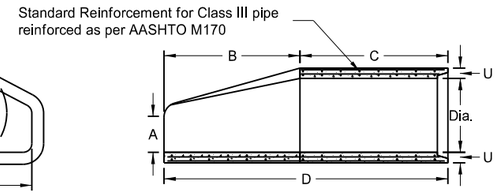

SIDE VIEW

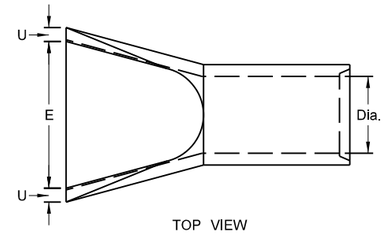

TOP VIEW

REINFORCED CONCRETE PIPE - FLARED END SECTION
Reinforcement to be equivalent to Class III RCP

FLARED END SECTION						
TERMINAL DIMENSIONS						
DIA	A	B	C	D	E	U
12	0'-4"	2'-0"	4'-0⅞"	6'-0⅞"	2'-0"	2"
15	0'-6"	2'-3"	3'-10"	6'-1"	2'-6"	2¼"
18	0'-9"	2'-3"	3'-10"	6'-1"	3'-0"	2½"
21	0'-9"	3'-0"	3'-1"	6'-1"	3'-6"	2¾"
24	0'-9½"	3'-7½"	2'-6"	6'-1½"	4'-0"	3"
27	0'-10½"	4'-0"	2'-1½"	6'-1½"	4'-6"	3¼"
30	1'-0"	4'-6"	1'-7¾"	6'-1¾"	5'-0"	3½"
36	1'-3"	5'-3"	2'-9"	8'-0"	6'-0"	4"
42	1'-9"	5'-3"	2'-9"	8'-0"	6'-6"	4½"
48	2'-0"	6'-0"	2'-0"	8'-0"	7'-0"	5"
54	2'-3"	5'-5"	2'-9¼"	8'-2¼"	7'-6"	5½"
60	2'-11"	5'-0"	3'-3"	8'-3"	8'-0"	5"
66	2'-6"	6'-0"	2'-3"	8'-3"	8'-6"	5½"
72	3'-0"	6'-6"	1'-9"	8'-3"	9'-0"	6"
78	3'-0"	7'-6"	1'-9"	9'-3"	9'-6"	6½"
84	3'-0"	7'-6½"	1'-9"	9'-3½"	10'-0"	6½"
90	3'-5"	7'-3½"	2'-0"	9'-3½"	11'-0"	6½"

TRAVERSABLE END SECTION							
DIA	B	C	D	E	F	R	S
15"	4'	9"	4'-9"	1'-7½"	2¼"	3"	6
18"	5'-9"	9"	6'-6"	1'-11"	2½"	3"	6
24"	6'	1'	7'	2'-6"	3"	3"	4
30"	7'-6"	1'	8'-6"	3'-1"	3½"	3½"	4
36"	7'-3"	15"	8'-6"	3'-8"	4"	3"	4

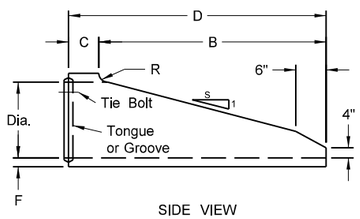

SIDE VIEW

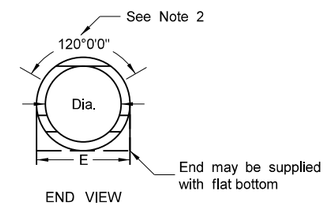

END VIEW

NOTES (Traversable End Section):

1. Manufactured in accordance with applicable portions of ASTM C76/AASHTO M170.
2. Reinforcement per Class III RCP with double reinforcement in the upper 120° of the full barrel portion.

REINFORCED CONCRETE PIPE - TRAVERSABLE END SECTION
Reinforcement to be equivalent to Class III RCP

All Classifications of Round Concrete Pipe					
Internal Dia. of pipe in Inches	Cross-Sectional Water Area	Weight per lin. foot of Pipe Std. Wall	Joint J Groove End Min./Max.	Joint K Tongue End Min.	Minimum Wall Thickness (T)
Dia	Sq. ft.	Lbs.	In.	In.	In.
12	0.79	92	1⅝-2⅜	¾	2
15	1.23	127	1¾-2¾	⅞	2¼
18	1.77	168	1⅞-2⅞	1	2½
21	2.40	214	1⅞-3⅛	1⅛	2¾
24	3.14	265	2⅛-3¼	1⅛	3
27	3.98	322	2¾-4	1¼	3¼
30	4.91	384	3⅛-4¼	1¼	3½
33	5.94	452	3⅛-4¼	1½	3¾
36	7.07	524	3⅛-4¼	1½	4
42	9.62	685	3⅜-4¾	1¾	4½
48	12.57	685	3⅝-4¾	1⅞	5
54	15.90	1070	4⅛-5⅛	2	5½
60	19.63	1296	4½-5½	2¼	6
66	23.76	1542	5-6	2⅝	6½
72	28.27	1810	5⅝-6¾	2⅞	7
78	33.18	2098	6¼-7¼	2⅞	7½
84	38.48	2410	5⅝-7¾	3⅜	8
90	44.18	2793	6¾-8½	3⅛	8½
96	50.27	3092	7-8¾	3½	9
102	56.75	3466	7-8¾	3½	9½
108	63.62	3864	7¼-8½	3¾	10

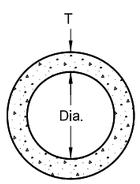

END VIEW

CIRCULAR PIPE

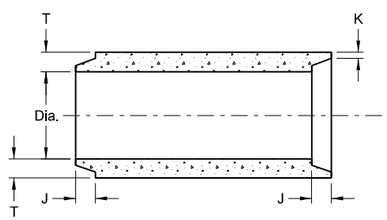

TONGUE & GROOVE JOINT

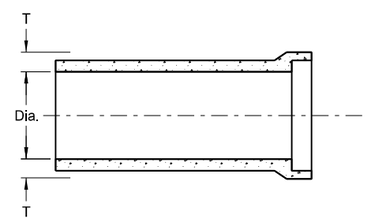

BELL & SPIGOT JOINT

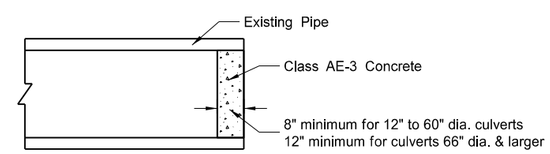

CONCRETE PIPE PLUG

JOINTS FOR REINFORCED CONCRETE PIPE

NOTES:

1. All reinforcing steel shall meet AASHTO M170 requirements.
2. All circular, longitudinal, and elliptical reinforcement shall be assembled and securely fastened in cage fashion so as to maintain reinforcement in exact shape and correct positions within the forms.
3. Laying length of pipe: 12" to 66" (incl.) = not less than 4 feet
   66" to 108" (incl.) = not less than 6 feet
4. Joints shall be sealed with rubber gaskets or with sealer approved by the engineer whenever pipe are specified for storm drain or sanitary sewers.
5. For Class IV and Class V reinforced concrete pipe and end section sizes which do not have reinforcement specified by AASHTO M170, shop drawings and design calculations shall be prepared and sealed by a Professional Engineer and submitted for the Engineer's review.

SEE STANDARD DRAWING D-714-22 FOR DETAILS OF CONCRETE PIPE TIES (TIE BOLTS).

NORTH DAKOTA DEPARTMENT OF TRANSPORTATION	
05-12-14	
REVISIONS	
DATE	CHANGE
01-21-15	Revised Note 5

This document was originally issued and sealed by Terrence R. Udland, Registration Number PE- 2674, on 01/21/15 and the original document is stored at the North Dakota Department of Transportation

CONCRETE PIPE OR PRECAST CONCRETE BOX CULVERT TIES

D-714-22

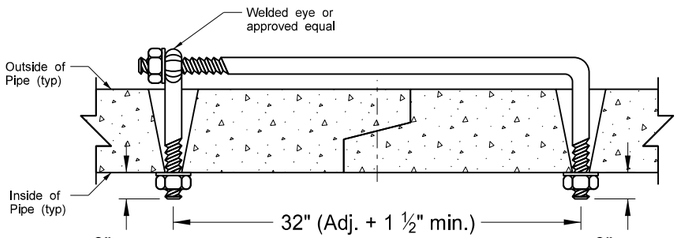

EYE BOLT TIE (PIPES ONLY)

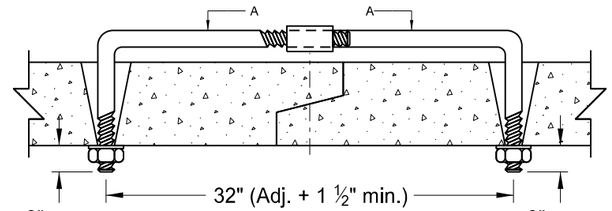

ADJUSTABLE TIE (PIPES ONLY)

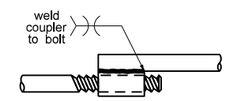

SECTION A-A

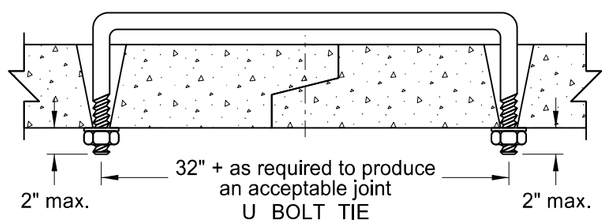

U BOLT TIE

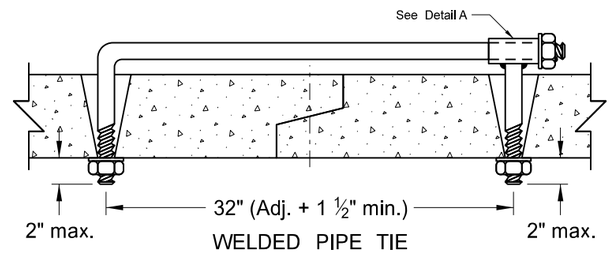

WELDED PIPE TIE

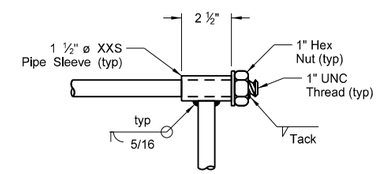

DETAIL A

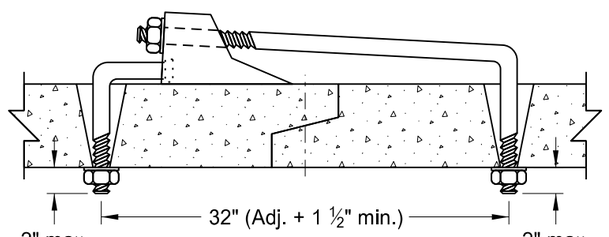

CANOPY TIE (PIPES ONLY)

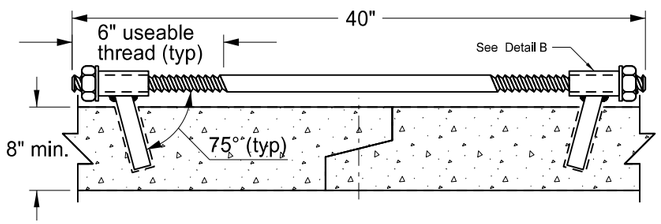

HIDDEN TIE (RCB ONLY)

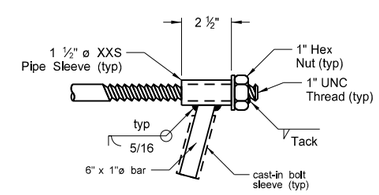

DETAIL B

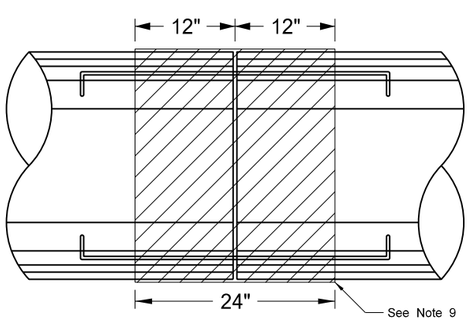

PLAN VIEW

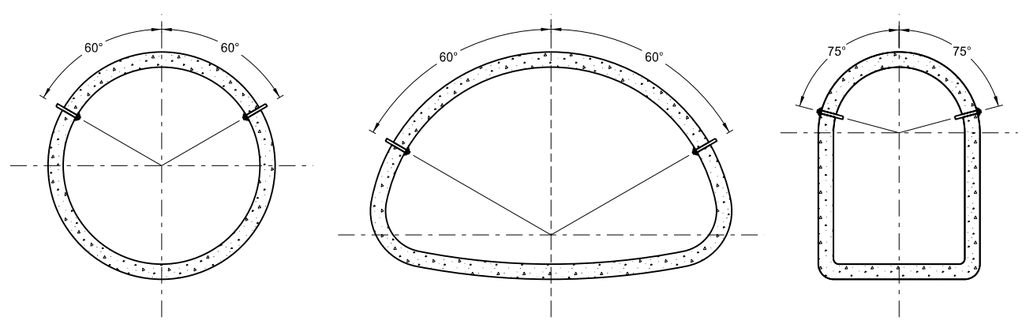

END VIEW

REQUIRED SIZE OF TIE BOLTS		
Pipe Size	Thread ø	XXS Pipe Sleeve Inner ø
18" - 24"	⅝" See note 2	¾"
30" - 66"	¾"	1"
72" - 78"	1"	1 ¼"
RCB		

NOTES:

1. The pipe size listed is the inside diameter of round pipe or the equivalent diameter of pipe arch.
2. Nuts and washers are not required on Jacked and Bored pipes or pipes with a 24" diameter or less. Where nuts and washers are not used, the tie bars shall be inserted and grouted into place.
3. Ties are only for holding pipe or RCB sections together, not for pulling sections tight.
4. Tie bolt assembly shall be hot dip galvanized in accordance with AASHTO M232.
5. Holes in pipes to accommodate tie bolts can be precast or drilled. Tapered holes are permitted when precast. Holes shall have a diameter ¼" larger than the diameter of the thread. Holes in precast RCB's shall contain cast-in bolt sleeves with an inside diameter of 1 ¼".
6. The contractor has the option of selecting the type of tie bolt used from those shown.
7. The cost of precasting or drilling the required holes and furnishing and installing the tie bolts shall be included in the price bid for the appropriate conduit or RCB pay item.
8. All centerline and approach RCP culvert joints shall be tied. Storm drain systems shall have the first three joints including the end section of all free ends tied. Free ends are defined as any storm drain end which does not terminate at an inlet or manhole. Outfall culverts with end sections which drain adjacent ditches are examples of free ends.
9. When joint wrap is specified in the plans, place wrap beneath ties. Overlap the joint by 12" in both directions.
10. Tie bolts shall conform to ASTM A 36. Nuts shall be be heavy hex and conform to ASTM A 563. Washers shall conform to ASTM F 436, Type 1. Welded pipe sleeves and cast-in bolt sleeves shall conform to ASTM A 53, Grade B.
11. Cattle Pass and Jacked and Bored pipes shall have pipe ties inserted from the inside of the pipes and grouted into place. Jacked and bored pipes with a diameter of 24" or less do not require pipe ties.
12. RCB tie locations shall be as shown on the plans.

NORTH DAKOTA DEPARTMENT OF TRANSPORTATION	
3-18-14	
REVISIONS	
DATE	CHANGE
7-21-15	Note 8

This document was originally issued and sealed by Terrence R. Udland, Registration Number PE-2674, on 07/21/15 and the original document is stored at the North Dakota Department of Transportation

D-714-26

TRANSVERSE MAINLINE PIPE INSTALLATION DETAIL FOR PIPES 4 FEET OR LESS BELOW THE TOP OF THE PROPOSED SUBGRADE

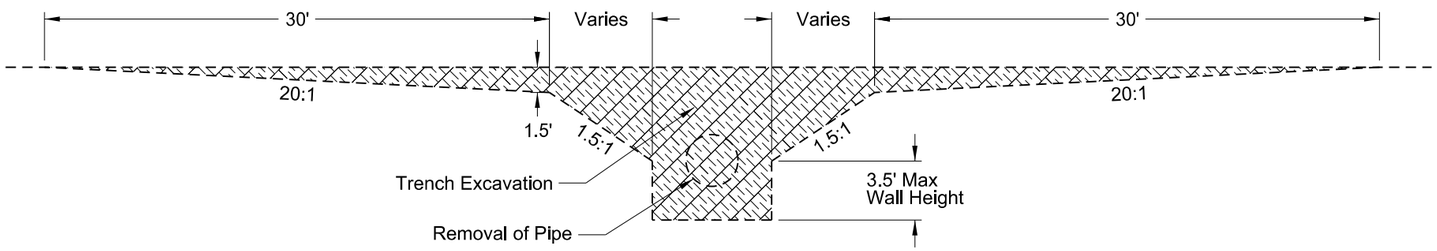

EXCAVATION DETAIL

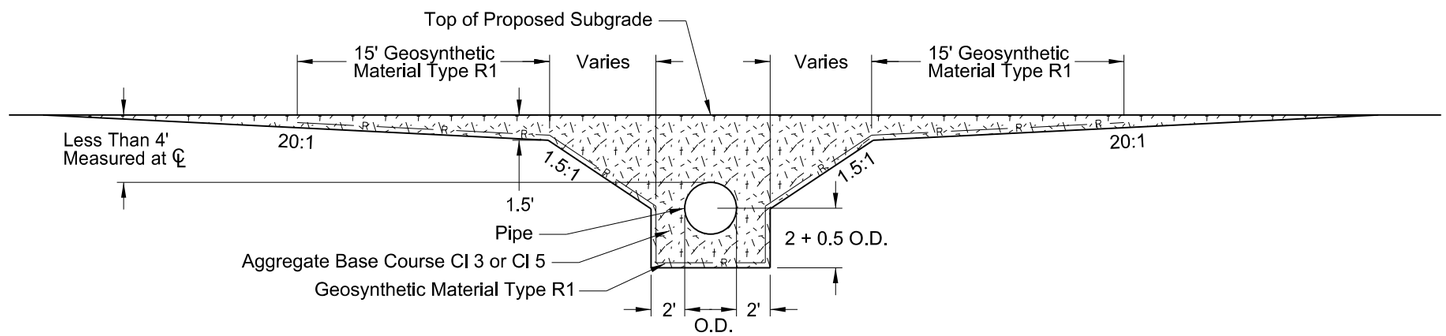

INSTALLATION DETAIL

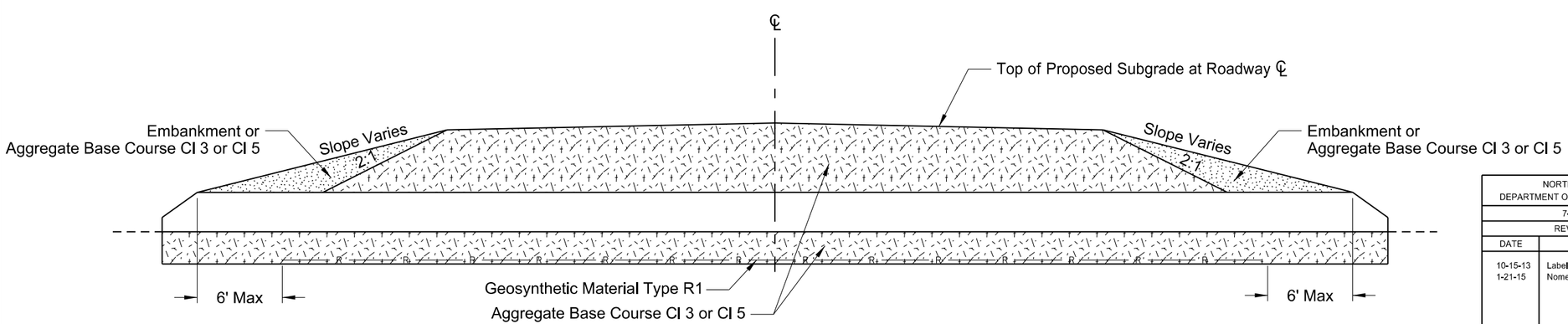

CROSS SECTION

Pay Items
1) Pipe*
2) Geosynthetic Material Type R1
3) Removal of Pipe (if required)

*Included in Pipe Pay Item
1) Pipe
2) Trench Excavation
3) Aggregate Base Course Cl 3 or Cl 5
4) Embankment

NOTES:

1) This drawing applies to new/replaced mainline and paved intersection roadway pipes only (including ramps). It does not include pipes in approaches.
2) Embankment may be either Borrow Excavation or Common Excavation - Type A

NORTH DAKOTA DEPARTMENT OF TRANSPORTATION

7-26-13

REVISIONS

DATE	CHANGE
10-15-13	Label Formatting
1-21-15	Nomenclature

This document was originally issued and sealed by Ron Horner, Registration Number PE- 2087, on 1/22/2015 and the original document is stored at the North Dakota Department of Transportation

PERFORATED TUBE ASSEMBLY DETAILS

D-754-23

Notes:

1. Curbed Roadways: The clearance from the face of the curb should be 3' except where right of way or sidewalk width is limited, a minimum clearance of 2' shall be provided. The horizontal clearance may need to be increased to maintain a minimum sidewalk clear width of 4' from the sign support, not including any attached curb.

2. Minimum vertical clearance: Signs installed at the side of the road in rural districts shall be at least 5' measured from the bottom of the sign to the edge of the driving lane or auxiliary lane. Where parking or pedestrian movements occur, the clearance to the bottom of the sign shall be at least 7'.

   Signs on expressways shall be installed with a minimum height of 7'.

   Adopt-a-highway signs installed on Freeways shall be at least 7' above the edge of the driving lane.

   The vertical clearance shall have a maximum height of 6" above the vertical clearance specified above.

3. Offset signs: Where signs are placed at least 30 feet or more from the edge of the traveled way, the height to the bottom of such sign shall be 5' above the edge of the driving lane.

4. The clearance from edge of shared use path to edge of sign should be 3' except where width is limited, a minimum clearance of 2' shall be provided.

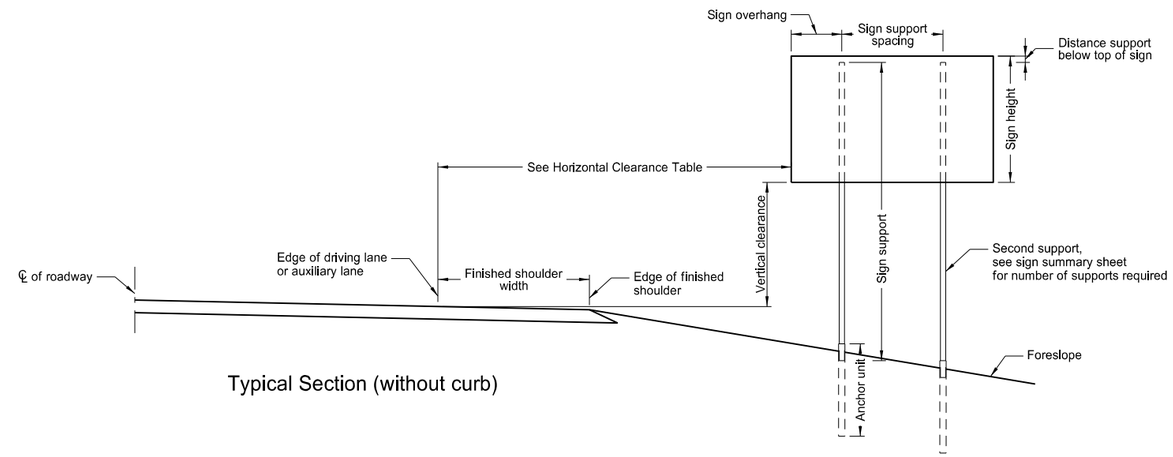

Typical Section (without curb)

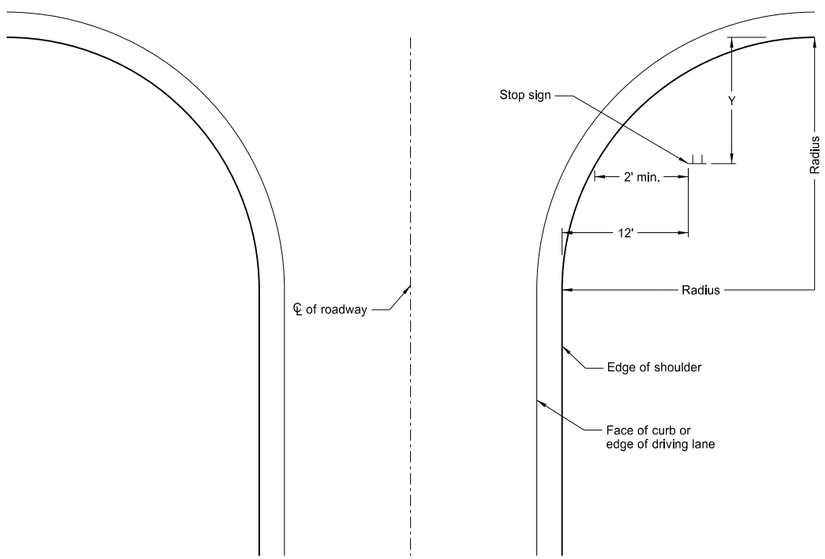

Stop Sign Location
Wide Throat Intersection

This layout is to be used for the placement of "Stop" signs.

Radius ft.	Y-max. ft.	Y-min. ft.
40	50	15
45	50	18
50	50	21
55	50	25
60	50	28
65	50	32
70	50	35
75	50	39
80	50	43

Horizontal Clearance Table	
Shoulder Width ft	Offset ft
0 to 2	16
>2 to 4	18
>4 to 6	20
>6 to 8	22
>8 to 10	24

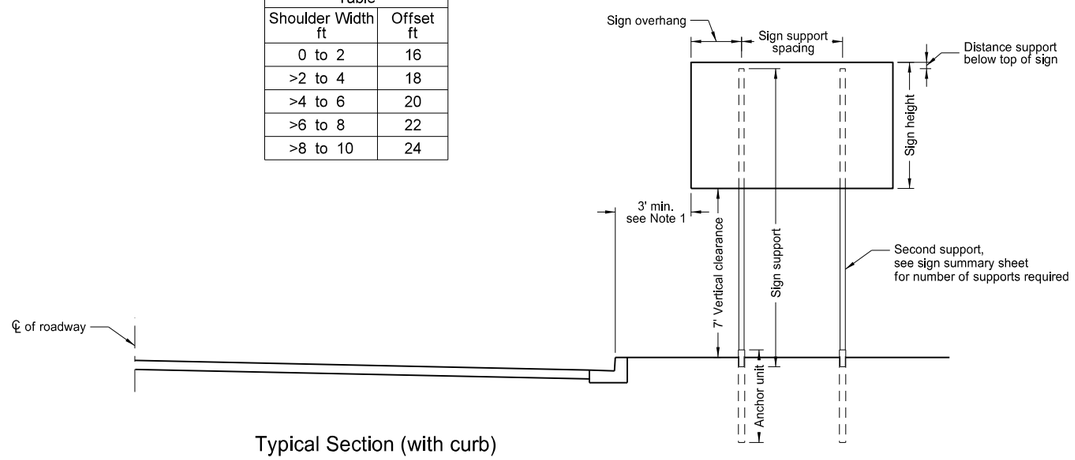

Typical Section (with curb)

Residential or Business District

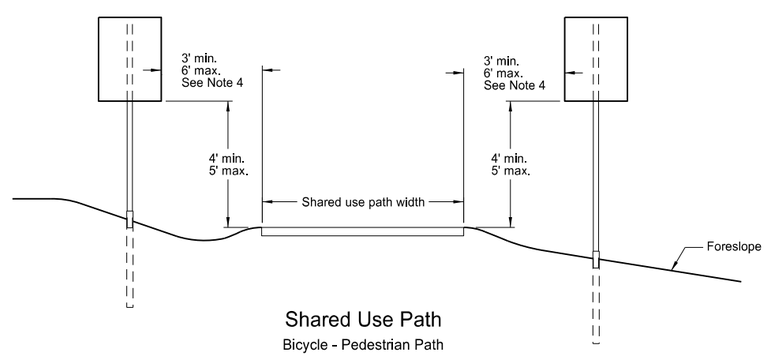

Shared Use Path

Bicycle - Pedestrian Path

NORTH DAKOTA DEPARTMENT OF TRANSPORTATION	
10-3-13	
REVISIONS	
DATE	CHANGE
7-8-14	Revised note 2, added note 4.

This document was originally issued and sealed by Roger Weigel Registration Number PE- 2930, on 7/8/14 and the original document is stored at the North Dakota Department of Transportation

Mounting Details Perforated Tube

D-754-24

Number of Posts	Telescoping Perforated Tube						
	Post Size In.	Wall Thick-ness Gauge	Sleeve Size In.	Wall Thick-ness Gauge	Slip Base	Anchor Size Without Slip Base In.	Anchor Wall Thick-ness Gauge
1	2	12			No	2¼	12
1	2¼	12			No	2½	12
1	2½	12			(B)	3(C)	7
1	2½	10			Yes		7
1	2¼	12	2½(D)	12	Yes		7
1	2½	12	2¼	12	Yes		7
2	2½	10			Yes		7
2	2¼	12	2½(D)	12	Yes		7
2	2½	12	2¼	12	Yes		7
3 & 4	2½	12			Yes		7
3 & 4	2½	10			Yes		7
3 & 4	2½	12	2¼	12	Yes		7
3 & 4	2¼	12	2½(D)	12	Yes		7
3 & 4	2½	10	2 3/16	10	Yes		7

(B) - The 2½", 12 gauge posts do not need breakaway bases when placed in standard soils, but require a shim as specified by the manufacturer. The breakaway base is required when the support is placed in weak soils. The Engineer shall determine if the soils are weak. Weak soils are classified as boggy, wet, or loose soil areas.
(C) - 3" anchor unit
(D) - 2½" x 12 ga. x 18" minimum length external sleeve required.

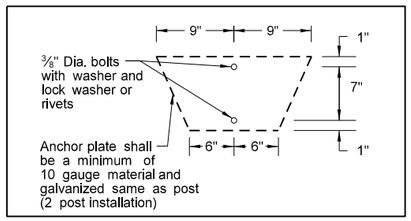

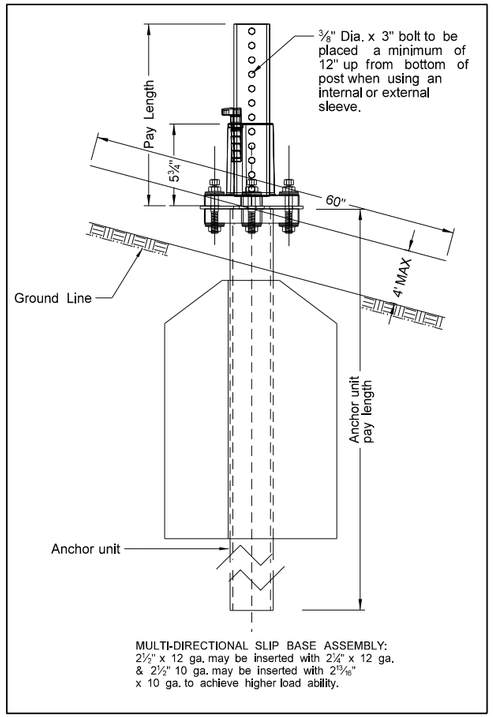

MULTI-DIRECTIONAL SLIP BASE ASSEMBLY:
2½" x 12 ga. may be inserted with 2¼" x 12 ga. & 2½" 10 ga. may be inserted with 2 15/16" x 10 ga. to achieve higher load ability.

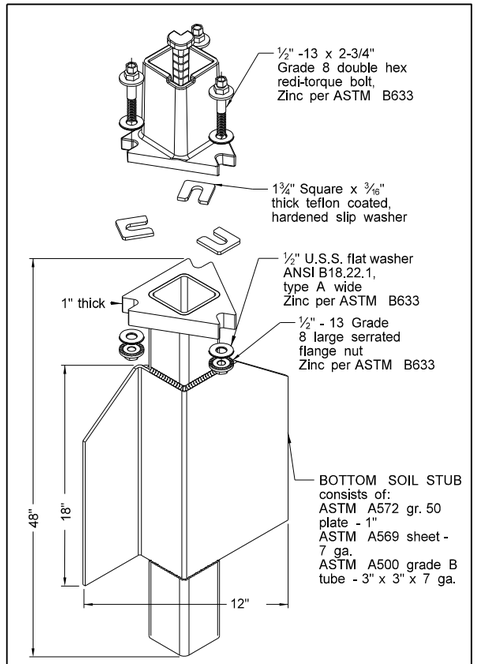

SLIP BASE FOR 2½" POST

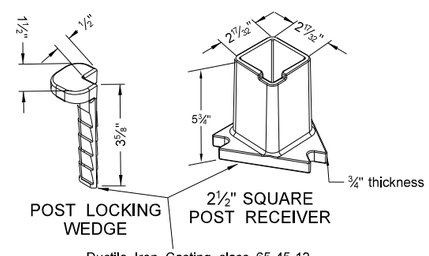

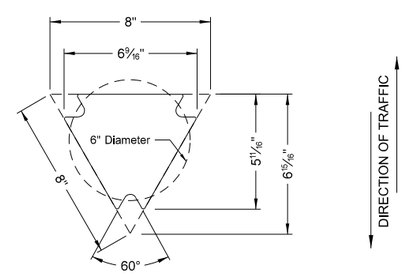

SLIP BASE DETAIL

Properties of Telescoping Perforated Tubes						
Tube Size In.	Wall Thickness in.	U.S. Standard Gauge	Weight Per Foot Lbs.	Moment of Inertia In.⁴	Cross Sect. Area In.²	Section Modulud In.³
1½ x 1½	0.105	12	1.702	0.129	0.380	0.172
2 x 2	0.105	12	2.416	0.372	0.590	0.372
2¼ x 2¼	0.105	12	2.773	0.561	0.695	0.499
2⅜ x 2⅜	0.135	10	3.432	0.605	0.841	0.590
2½ x 2½	0.105	12	3.141	0.804	0.803	0.643
2½ x 2½	0.135	10	4.006	0.979	1.010	0.783

The 2 3/16" size 10 gauge is shown as 2.19" size on the plans; The 2½" size is shown as 2.51" size on the plans.

NOTE:

1. 4" Vertical clearance of anchor or breakaway base. The 4" x 60" measurement shall be made above and below post location and also back and ahead of post.
2. Anchor material shall be 7 guage H.R.P.O. Commmercial quality ASTM A569 and 3" x 3" x 7" guage ASTM A500 grade B. Anchor shall have a yield strength 43.9 KSI and tensile strength of 59.3 KSI. Anchor shall be hot dipped galvanized per ASTM A123/153. All tolerances on anchor unit and slip base bottom assembly are +/- 0.005" unless ortherwise noted.
3. When used in concrete sidewalk, anchor shall be the same concept without the wings
4. Four post signs shall have over 8' between the first and fourth posts.
5. Installation procedures as per manufacturers recommendation.
6. Concrete fasteners for surface mount breakaway base shall be a minimum ½" diameter x 4" grade 8.

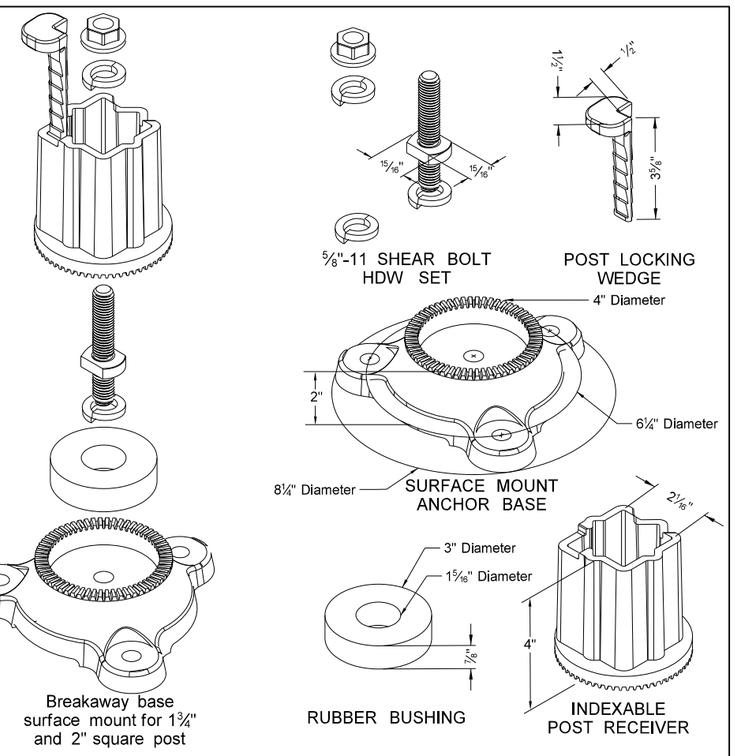

SURFACE MOUNT ANCHOR BASE

SHOULDER BOLT

Shimming agent to reduce tolerance between 3" anchor unit and 2½" post.
(standard ⅜" diameter grade 8 bolt may be used with proper shim)

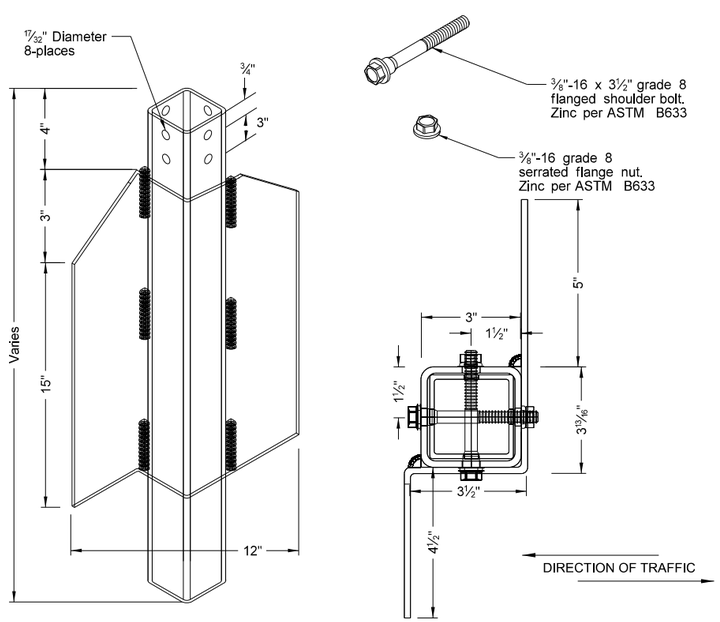

3" ANCHOR UNIT

NORTH DAKOTA DEPARTMENT OF TRANSPORTATION	
8-6-09	
REVISIONS	
DATE	CHANGE

This document was originally issued and sealed by Roger Weigel, Registration Number PE- 2930, on 08/06/09 and the original document is stored at the North Dakota Department of Transportation

Mounting Details Perforated Tube

D-754-25

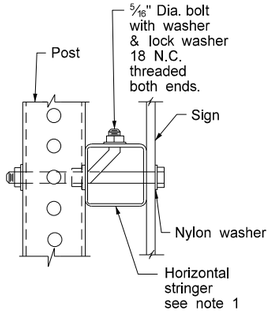

Side View

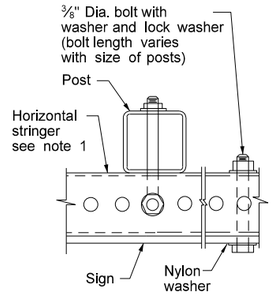

Top View

STRINGER MOUNTING
(WITH STRINGER IN FRONT OF POST)

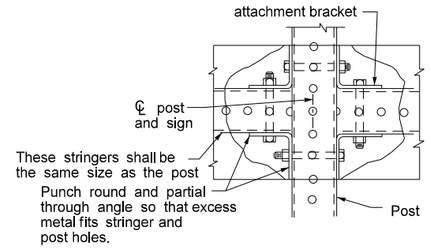

STREET NAME SIGNS
AND ONE WAY SIGNS
SINGLE POST ASSEMBLY
ONE STRINGER OR
BACK TO BACK MOUNTING

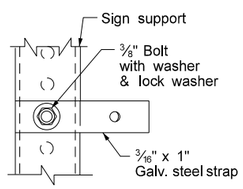

Side View

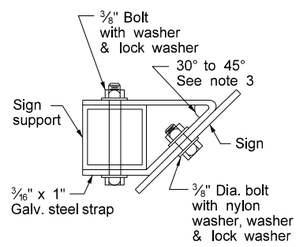

Top View

STRAP DETAIL

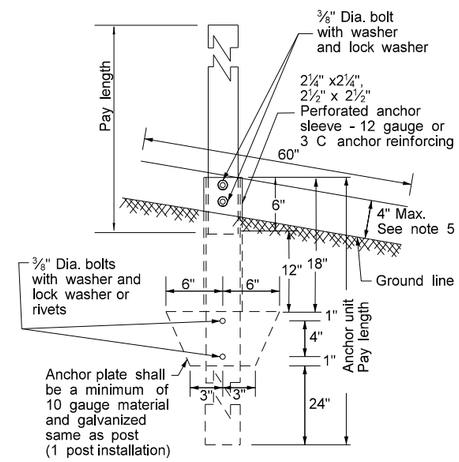

ANCHOR UNIT AND
POST ASSEMBLY

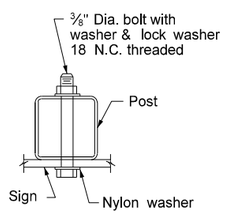

BOLT MOUNTING

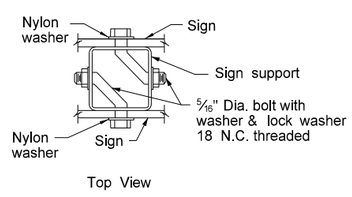

Top View

BACK TO BACK
MOUNTING

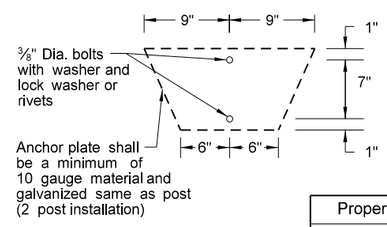

Note:

1. Horizontal stringers - In lieu of perforated tubes, the contractor may substitute z bar stringers. The z bar stringers shall be 1¾" x 3/16" thick, 1.08 lbs./ft aluminum or 3.16 lbs./ft steel.
2. Metal washers used on sign face shall have a minimum outside diameter of 15/16" ± 1/16" and 10 gauge thickness.
3. No Parking Signs: All no parking signs with directional arrows shall be placed at a 30 to 45 degree angle with the line of traffic flow. No parking signs required at the above angles may have the support turned to the correct angle. If the no parking sign is placed with another sign that has to be placed at a 90 degree angle with the line of traffic flow, the detailed angle strap should be used to mount the no parking sign. Flat washers and lock washers shall be used with all nylon washers.
4. In lieu of using the bent bolt to attach the post to the stringer, the contractor may choose to punch the sign backing and place the bolt through the sign, the stringer and the post.
5. 4" vertical clearance of anchor or breakaway base. The 4" x 60" measurement shall be made above and below post location and also back and ahead of post.

Number of Posts	Telescoping Perforated Tube						
	Post Size In.	Wall Thick-ness Gauge	Sleeve Size In.	Wall Thick-ness Gauge	Slip Base	Anchor Size Without Slip Base In.	Anchor Wall Thick-ness Gauge
1	2	12			No	2¼	12
1	2¼	12			No	2½	12
1	2½	12			(B)	3(C)	7
1	2½	10			Yes		7
1	2¼	12	2½(D)	12	Yes		7
1	2½	12	2¼	12	Yes		7
2	2½	10			Yes		7
2	2¼	12	2½(D)	12	Yes		7
2	2½	12	2¼	12	Yes		7
3 & 4	2½	12			Yes		7
3 & 4	2½	10			Yes		7
3 & 4	2½	12	2¼	12	Yes		7
3 & 4	2¼	12	2½(D)	12	Yes		7
3 & 4	2½	10	2 3/16	10	Yes		7

(B) - The 2½", 12 gauge posts do not need breakaway bases when placed in standard soils, but require a shim as specified by the manufacturer. The breakaway base is required when the support is placed in weak soils. The Engineer shall determine if the soils are weak. Weak soils are classified as boggy, wet, or loose soil areas.
(C) - 3" anchor unit
(D) - 2½" x 12 ga. x 18" minimum length external sleeve required.

Properties of Telescoping Perforated Tubes						
Tube Size In.	Wall Thickness In.	U.S. Standard Gauge	Weight Per Foot Lbs.	Moment of Inertia $In.^4$	Cross Sect. area $In.^2$	Section Modulus $In.^3$
1½ x 1½	0.105	12	1.702	0.129	0.380	0.172
2 x 2	0.105	12	2.416	0.372	0.590	0.372
2¼ x 2¼	0.105	12	2.773	0.561	0.695	0.499
2 3/16 x 2 3/16	0.135	10	3.432	0.605	0.841	0.590
2½ x 2½	0.105	12	3.141	0.804	0.803	0.643
2½ x 2½	0.135	10	4.006	0.979	1.010	0.783

The 2 3/16" size 10 gauge is shown as 2.19" size on the plans.
The 2½" size is shown as 2.51" size on the plans.

NORTH DAKOTA
DEPARTMENT OF TRANSPORTATION

8-6-09

REVISIONS

DATE	CHANGE
7-8-14	Revised Note 3

This document was originally issued and sealed by Roger Weigel, Registration Number PE- 2930 , on 7/8/14 and the original document is stored at the North Dakota Department of Transportation

SIGN PUNCHING, STRINGER AND SUPPORT LOCATION DETAILS REGULATORY, WARNING AND GUIDE SIGNS

D-754-27

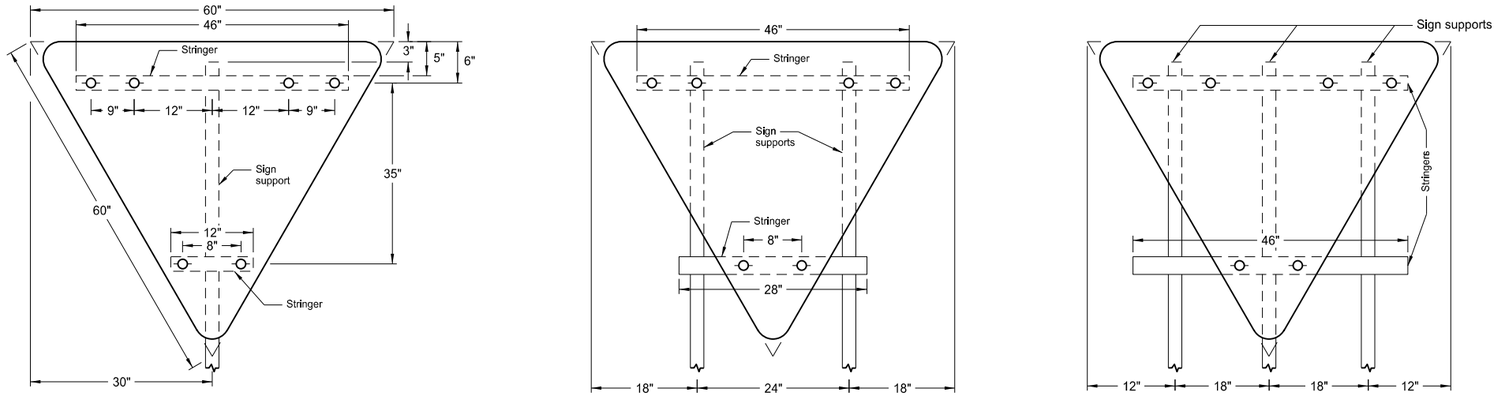

Assembly No. 6

Notes:

1. See Standard D-754-25 for mounting details.

2. The minimum sign backing material thickness shall be 0.100 inch.

3. Perforated square tube stringer shall be 1½" x 1½".

4. All holes shall be punched round for ⅜" bolt.

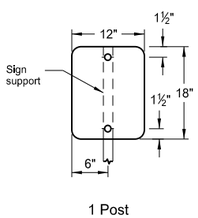

Assembly No. 7

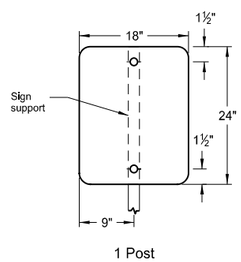

Assembly No. 8

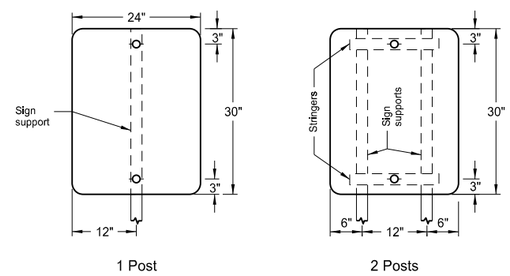

Assembly No. 9

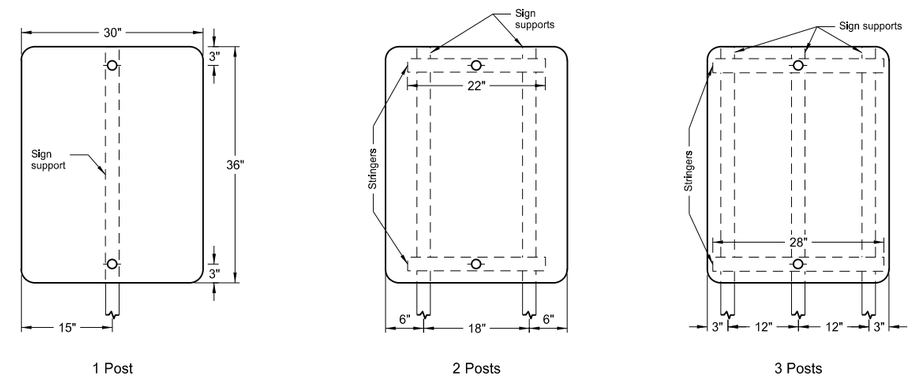

Assembly No. 10

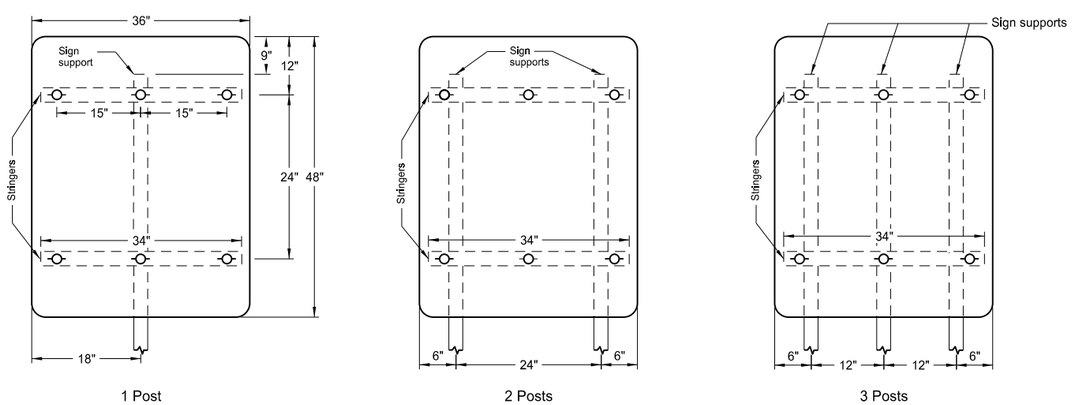

Assembly No. 11

NORTH DAKOTA DEPARTMENT OF TRANSPORTATION	
12-1-10	
REVISIONS	
DATE	CHANGE

This document was originally issued and sealed by Roger Weigel, Registration Number PE- 2930, on 12-1-10 and the original document is stored at the North Dakota Department of Transportation

D-754-29

SIGN PUNCHING, STRINGER AND SUPPORT LOCATION DETAILS REGULATORY, WARNING AND GUIDE SIGNS

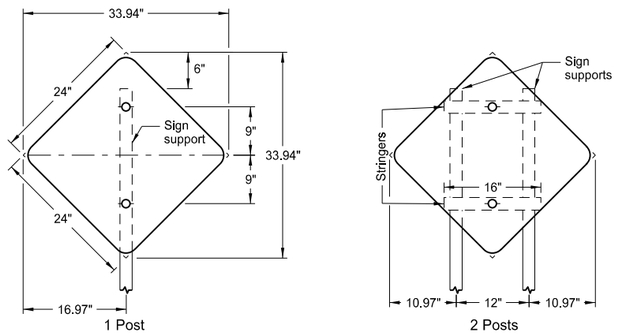

Assembly No. 18

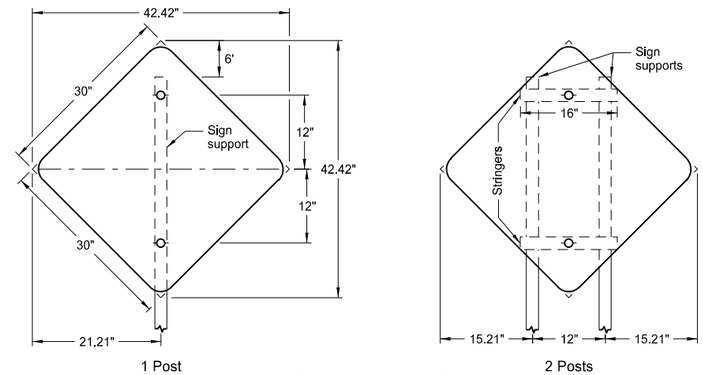

Assembly No. 19

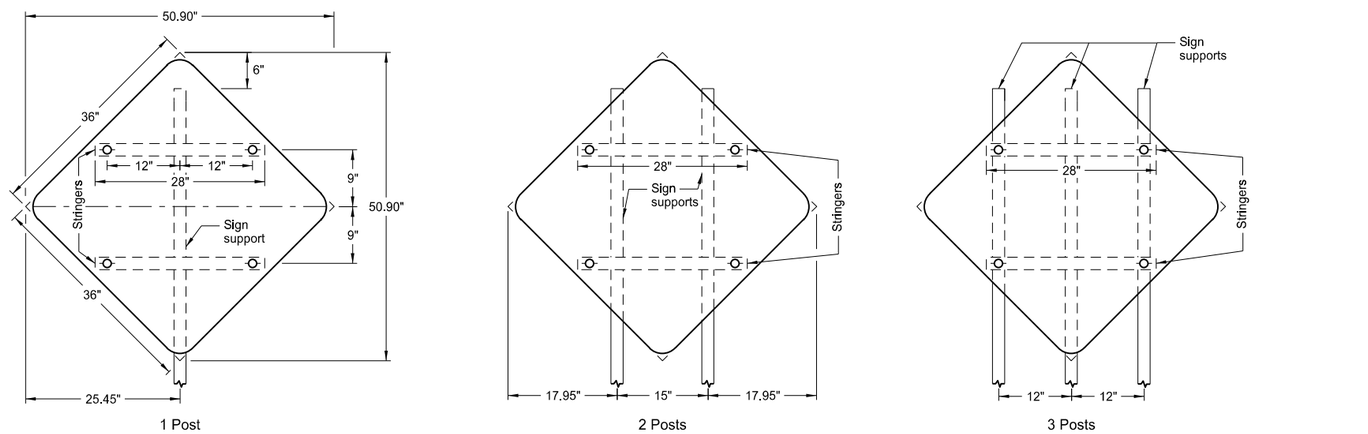

Assembly No. 20

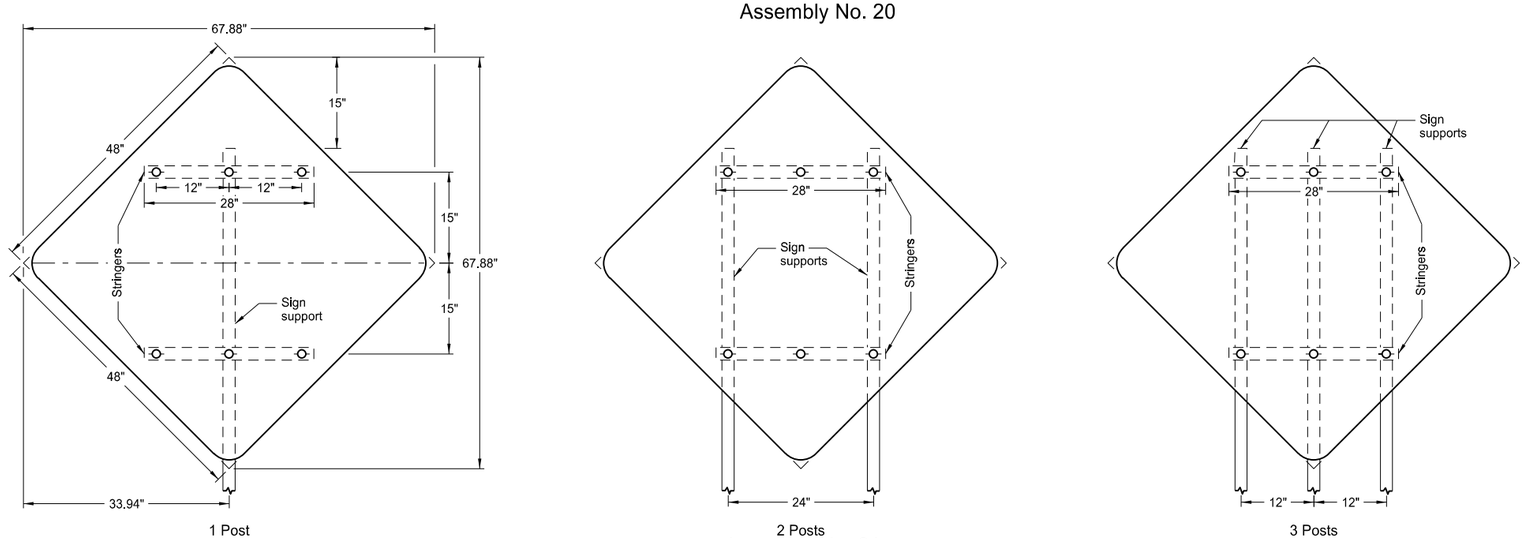

Assembly No. 21

Notes:

1. See Standard D-754-25 for mounting details.

2. The minimum sign backing material thickness shall be 0.100 inch.

3. Perforated square tube stringer shall be 1½" x 1½".

4. All holes shall be punched round for ⅜" bolt.

NORTH DAKOTA DEPARTMENT OF TRANSPORTATION	
12-1-10	
REVISIONS	
DATE	CHANGE

This document was originally issued and sealed by Roger Weigel, Registration Number PE- 2930, on 12-1-10 and the original document is stored at the North Dakota Department of Transportation

SIGN PUNCHING, STRINGER AND SUPPORT LOCATION DETAILS REGULATORY, WARNING AND GUIDE SIGNS

D-754-32

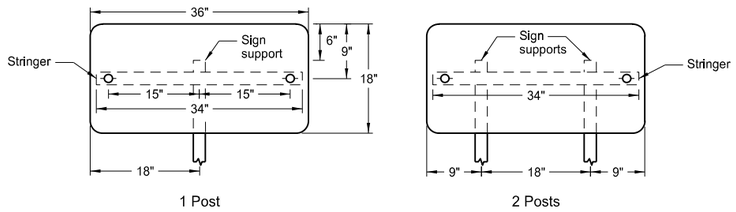

Assembly No. 31

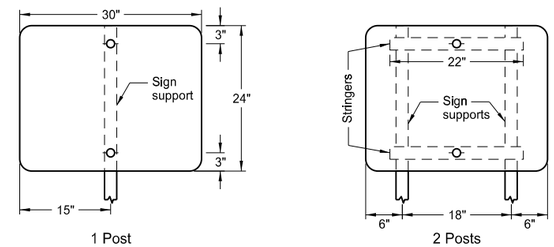

Assembly No. 32

Notes:

1. See Standard D-754-25 for mounting details.
2. The minimum sign backing material thickness shall be 0.100 inch.
3. Perforated square tube stringer shall be 1½" x 1½".
4. All holes shall be punched round for ⅜" bolt.

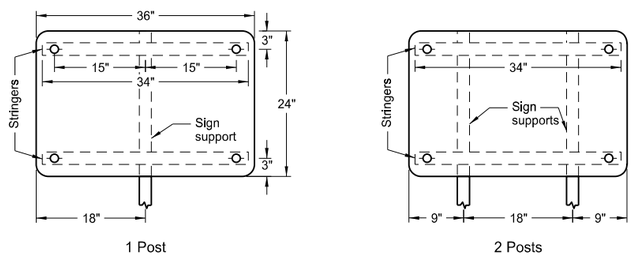

Assembly No. 33

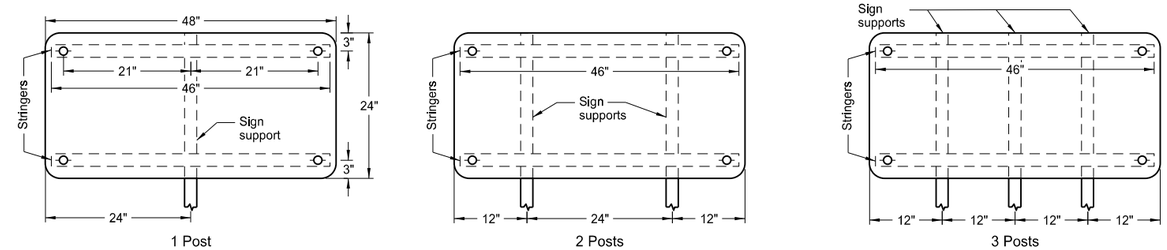

Assembly No. 34

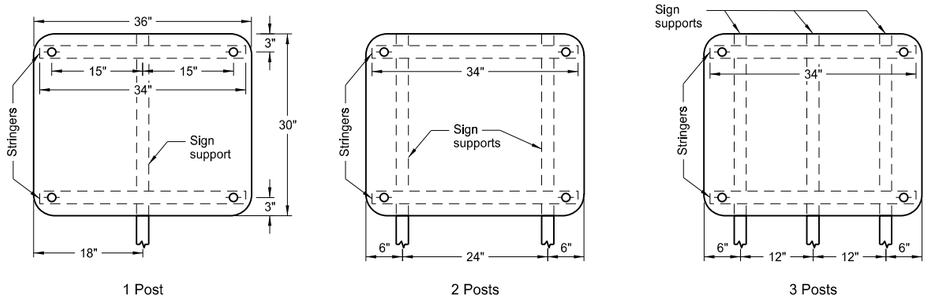

Assembly No. 35

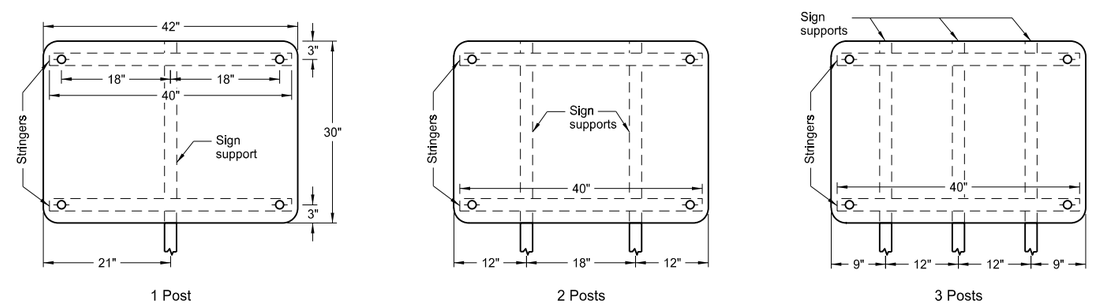

Assembly No. 36

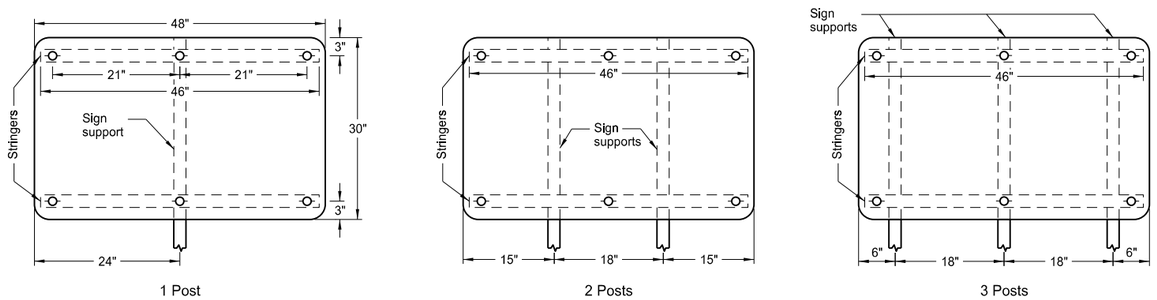

Assembly No. 37

NORTH DAKOTA DEPARTMENT OF TRANSPORTATION	
12-1-10	
REVISIONS	
DATE	CHANGE

This document was originally issued and sealed by Roger Weigel, Registration Number PE- 2930, on 12-1-10 and the original document is stored at the North Dakota Department of Transportation

OBJECT MARKERS

D-754-82

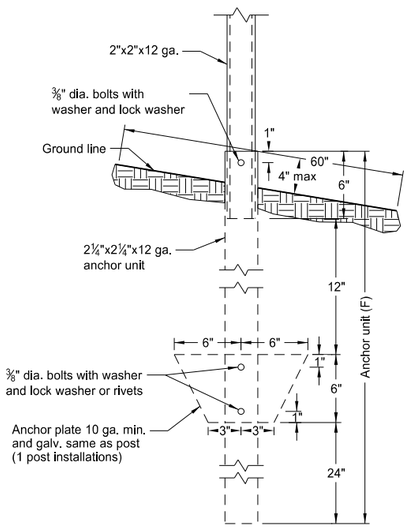

Perforated Tube Anchor Unit Assembly

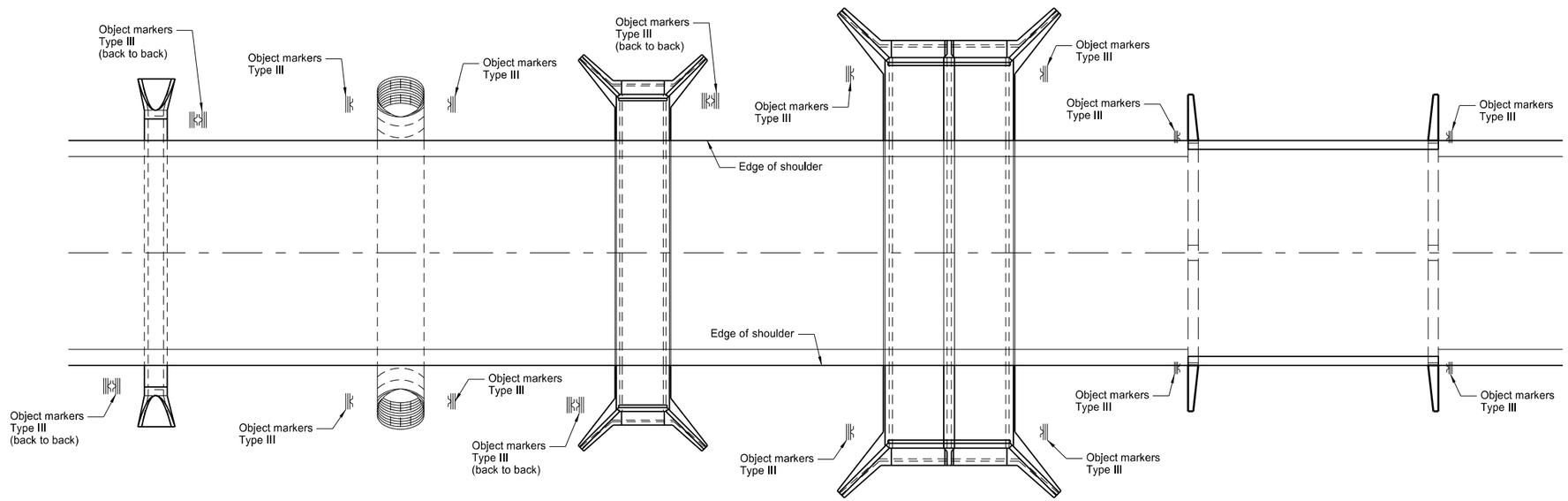

Pipe Culverts 10' max

Pipe Culverts greater than 10'

Box Culverts 10' max

Box Culverts greater than 10'

Bridges (B)

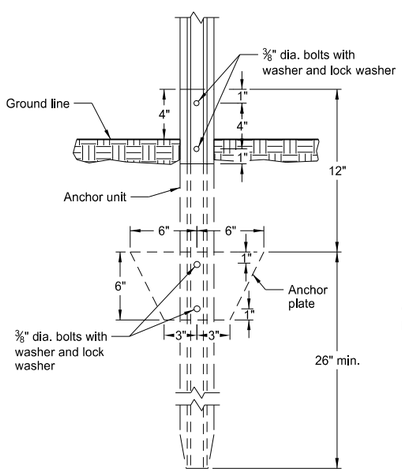

U-Channel Anchor Unit Assembly

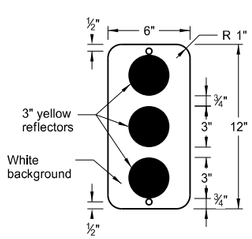

Object Marker
OM2-1V (C)
Type II

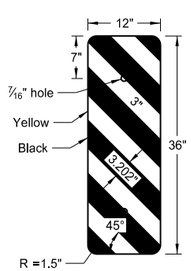

Object Marker Left
OM-3L (C)
Type III

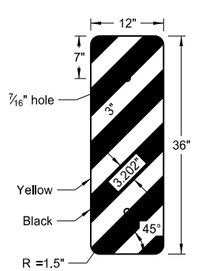

Object Marker Right
OM-3R (C)
Type III

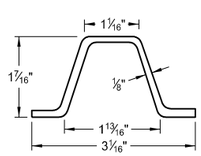

Steel Post Detail (E)
Approx. 2 lb/ft

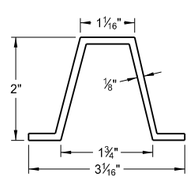

Aluminum Post Detail (E)
Approx. 0.88 lb/ft

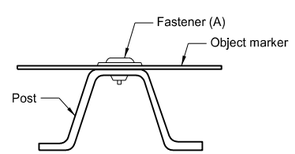

Fastener Detail

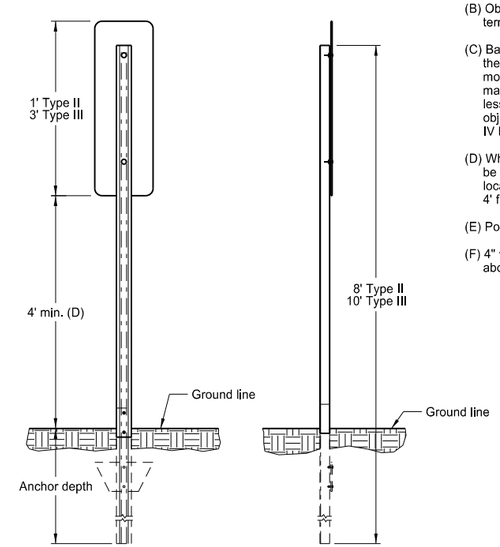

Object Marker
Installation Detail

Notes:

(A) The fastener shall be ⅜" dia. with flat washer having a min. outside dia. of 13/16". Fasteners shall be tension pin type or other non-rust vandal resistant fastener.

(B) Object markers are not required if approach guardrail is installed with reflectors and end terminal with impact head object markers.

(C) Back to back mountings require two object markers. The 3" yellow reflector shall conform to the requirements of Section 894.06 B.2 of the Standard Specifications. Object markers to be mounted vertically on steel posts in front of the bridge railing on each side of highway to mark the horizontal clearance on all bridges where the distance between wheel guards is less than approach width. All sign backing material shall be .100" sheet aluminum. Type III object markers shall be ASTM Type XI sheeting. Type II object markers shall be ASTM Type IV background sheeting with ASTM Type XI reflectors.

(D) When an object marker is located 8' or less from shoulder or curb, vertical clearance shall be a minimum of 4' from the near edge of the traveled way to the bottom of the sign. If located more than 8' from the shoulder or curb the vertical clearance shall be a minimum of 4' from the ground to the bottom of the sign.

(E) Posts shall conform to Section 894.03 B of the Standard Specifications.

(F) 4" vertical clearance of anchor or breakaway base. The 4"x60" measurement shall be made above and below post location and back and ahead of post.

NORTH DAKOTA DEPARTMENT OF TRANSPORTATION	
10-3-13	
REVISIONS	
DATE	CHANGE
7-18-14	Revised Note C

This document was originally issued and sealed by Roger Weigel Registration Number PE- 2930, on 7/18/14 and the original document is stored at the North Dakota Department of Transportation

OBJECT MARKERS - CULVERTS

D-754-83

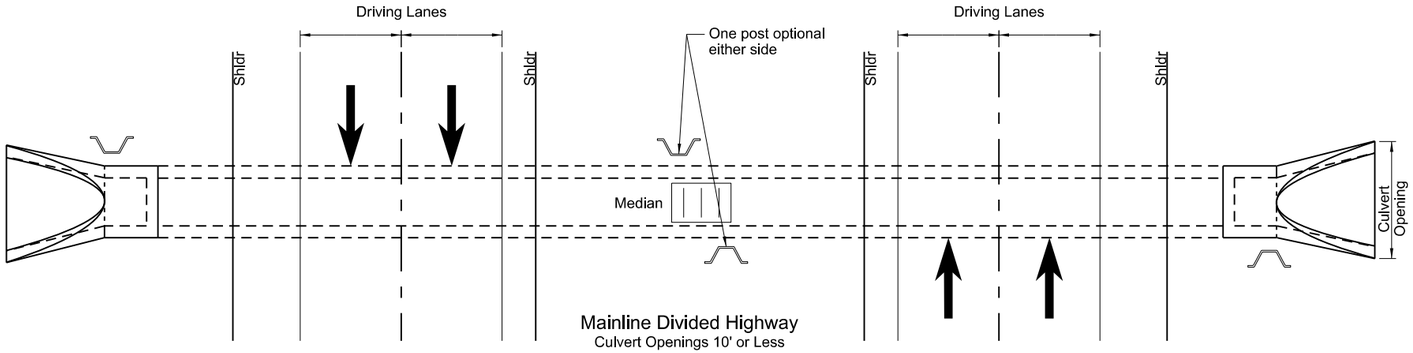

Mainline Divided Highway
Culvert Openings 10' or Less

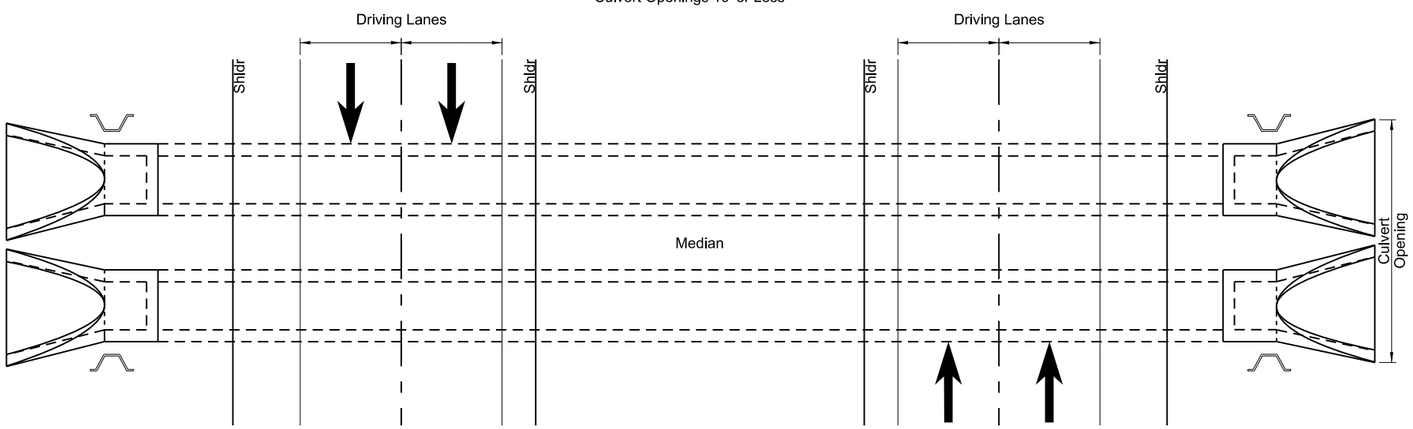

Mainline Divided Highway
Culvert Openings Greater than 10'
Multiple Installations

Post Location

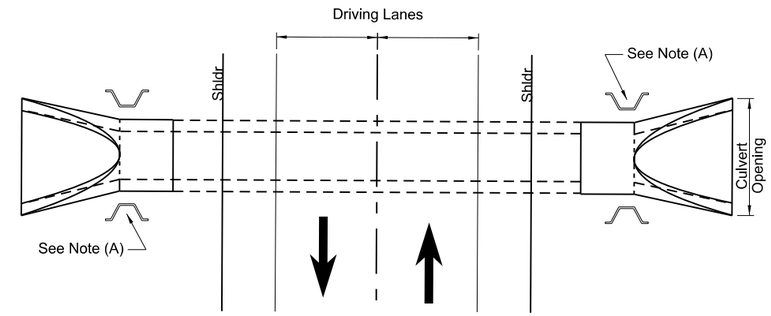

Two-Lane Highway

(A) Additional marker shall be installed where multiple pipe installations have a width of greater than 10'.

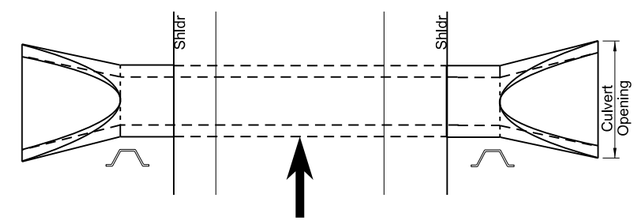

Ramp

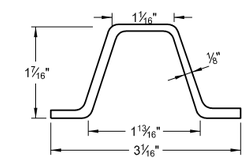

Steel Post Detail
Approx. 2.0 lbs/ft

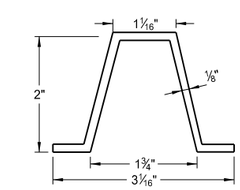

Aluminum Post Detail
Approx. 0.88 lbs/ft

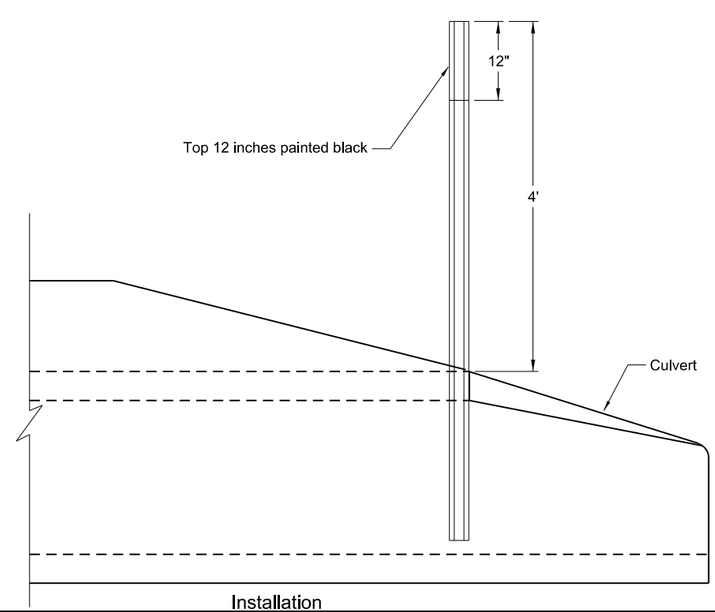

Installation

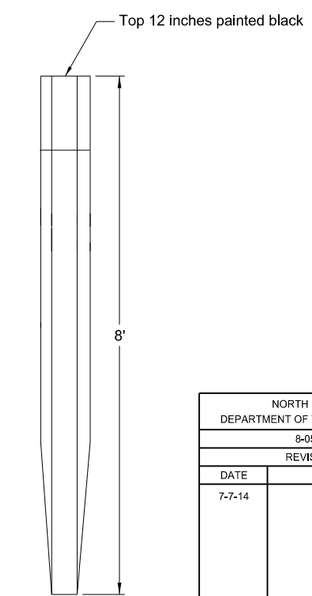

U-Type Post

Notes:

Installation: Construction requirements shall meet 754.04D. Each end of culverts crossing the roadway within the right-of-way shall be marked with a post as shown. Posts are to be installed in front of the culvert in the direction of travel along the side of the culvert and one foot from the culvert opening unless shown otherwise on the plans.

Posts: Posts shall conform to section 894.04A of the Standard Specifications with the exception that the post may or may not have holes drilled.

Basis of Payment: The quantity will be measured by the number of object markers each installed. All costs for furnishing and installing the markers shall be included in the price bid for the item "Object Markers - Culverts".

NORTH DAKOTA DEPARTMENT OF TRANSPORTATION	
8-05-13	
REVISIONS	
DATE	CHANGE
7-7-14	Revised Notes

This document was originally issued and sealed by Roger Weigel, Registration Number PE- 2930, on 7/7/2014 and the original document is stored at the North Dakota Department of Transportation

RUMBLE STRIPS
UNDIVIDED HIGHWAYS (SHOULDERS 4' OR GREATER)

D-760-3

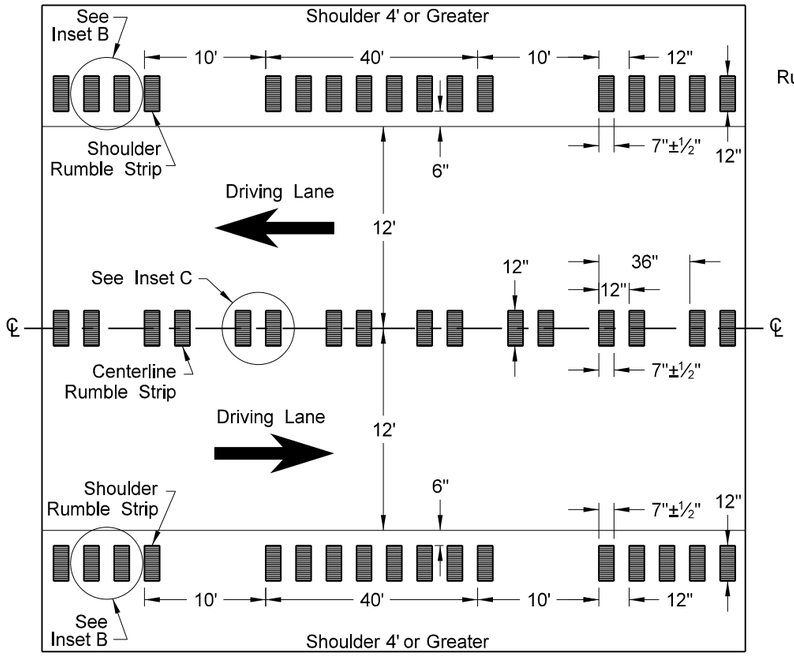

Undivided Highways (Shoulders 4' or Greater)

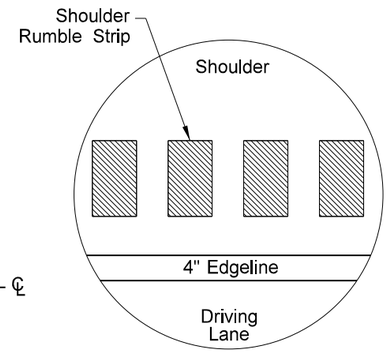

Inset B - Shoulder Rumble Strip

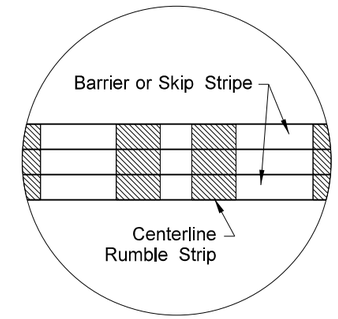

Inset C - Centerline Rumble Strip

NOTES:

1) Discontinue shoulder rumble strips through the entire length of right turn lanes, 100' before right turn lane tapers, and at the radius of a paved or gravel highway, section line, approach, or private drive.

2) Discontinue centerline rumble strips through the entire length of left turn lanes, 100' before left turn lane tapers and median islands, and 100' before and after a paved or gravel highway, section line, approach, or private drive.

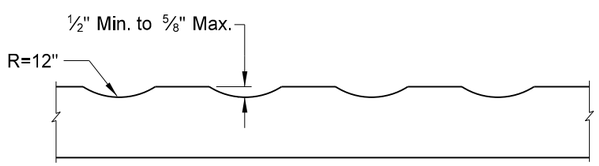

Profile of Rumble Strips - Bituminous and PCC Pavements

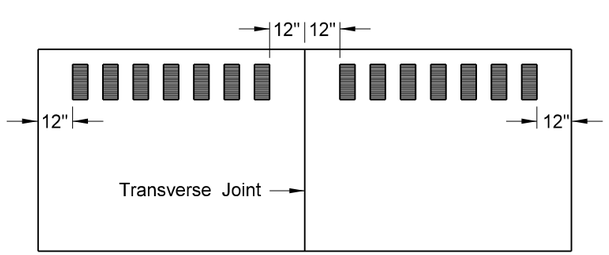

Discontinue rumble strip approx. 12" on both sides of PCC transverse joint

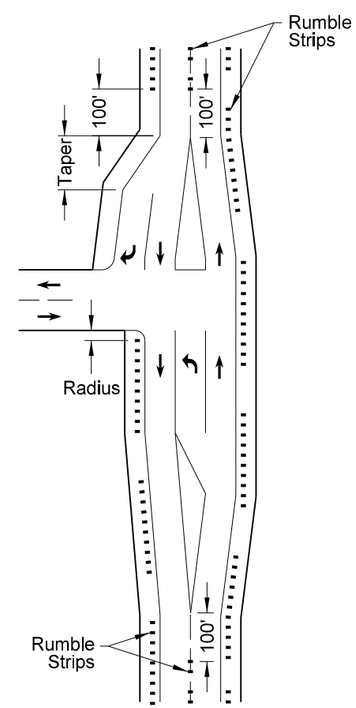

Turn Lane (Right & Left)

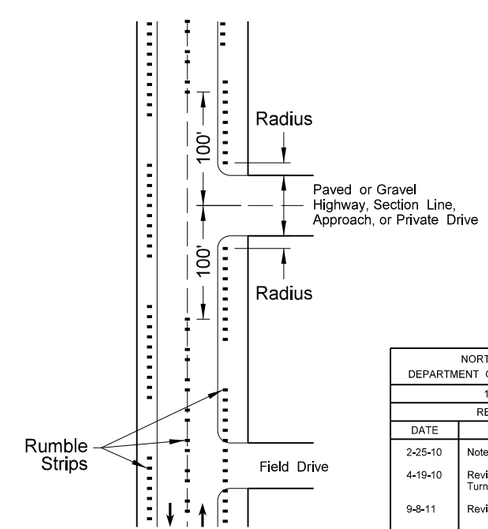

Entrance Roadways

NORTH DAKOTA DEPARTMENT OF TRANSPORTATION	
12-29-09	
REVISIONS	
DATE	CHANGE
2-25-10	Note 4 was added.
4-19-10	Revised Note 5, Note 6, and Turn Lane (Right & Left).
9-8-11	Revised Notes and D-760-3.

This document was originally issued and sealed by Roger Weigel, Registration Number PE- 2930 , on 9/8/11 and the original document is stored at the North Dakota Department of Transportation

Pavement Marking Message Details

D-762-1

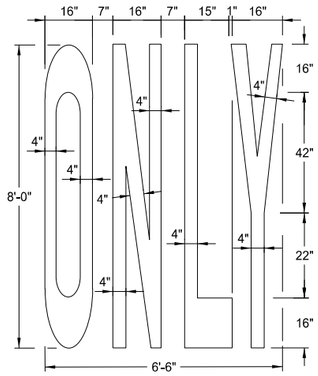

22 S. F.

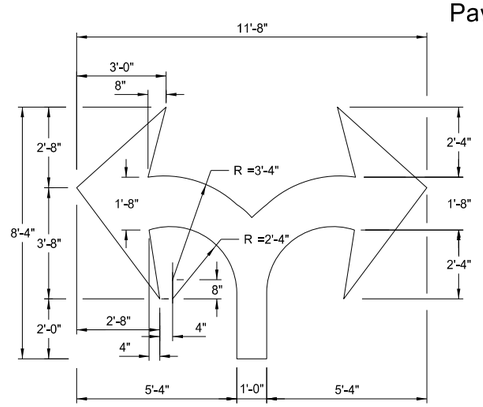

29 S. F.

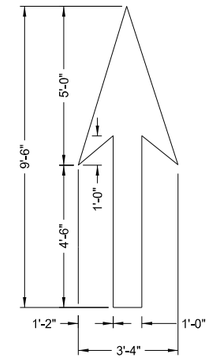

12 S. F.

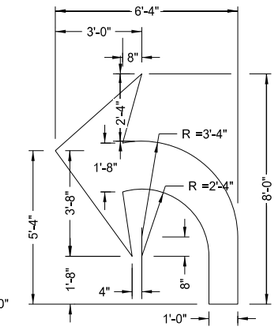

16 S. F.

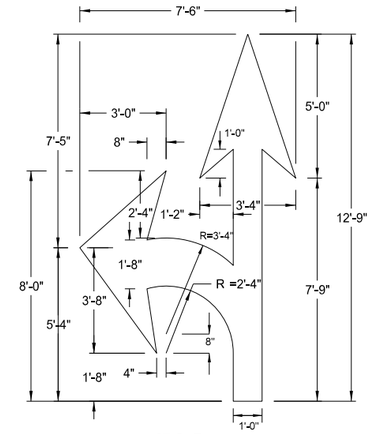

27 S. F.

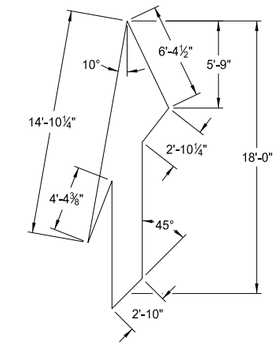

41 S. F.

Note:
The merge arrow shall be rotated 20° from the edge of the roadway.

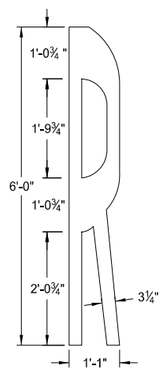

4 S. F.

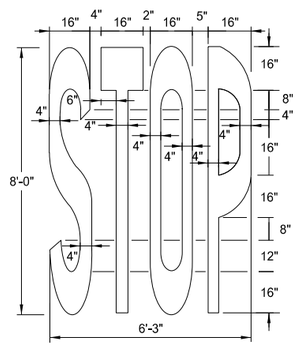

22 S. F.

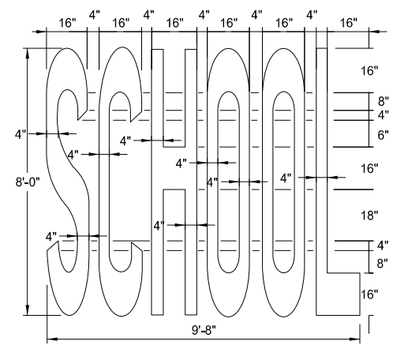

34.5 S. F.

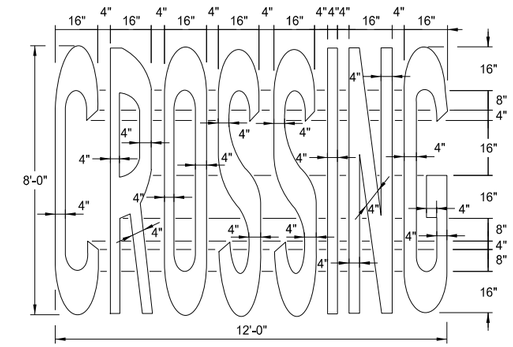

46 S. F.

Speed Limit	Chevron Width	Chevron Spacing 45° to Traffic
0-25 mph	8"	5'
30-40 mph	8"	15'
45 mph and above	12"	25'

Chevron Crosshatching Table

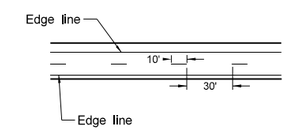

Centerline Pavement Marking Skip Spacing Detail

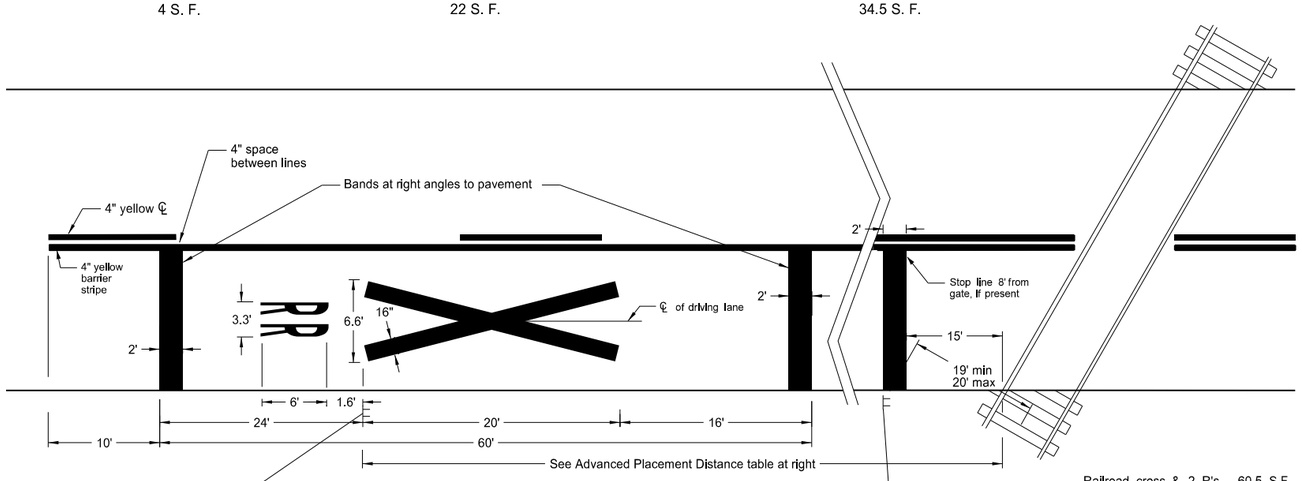

Railroad cross & 2 R's 60.5 S.F.
3 Bands (12' lane) 72 S.F.

See Standard Drawing D-754-81

Notes:
A three lane roadway should be marked with a centerline for two-lane approach operation on the approach to a crossing. On multi-lane roads, the transverse bands should extend across all approach lanes, and individual R X R symbols should be used in each approach lane.

See plans for correct message. All pavement markings shall be white unless noted otherwise.

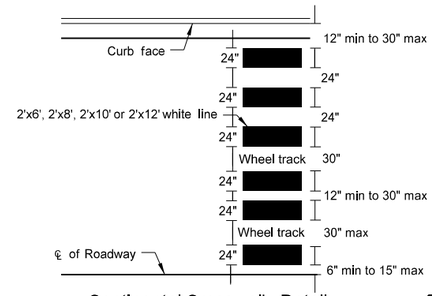

Continental Crosswalk Detail

Advance Placement Distance for Railroad Warning Signs	
Posted or 85th Percentile Speed	Advance Distance
20 mph	min. 100 ft
25 mph	min. 100 ft
30 mph	min. 100 ft
35 mph	min. 100 ft
40 mph	125 ft
45 mph	175 ft
50 mph	250 ft
55 mph	325 ft
60 mph	400 ft
65 mph	475 ft
70 mph	550 ft

NORTH DAKOTA DEPARTMENT OF TRANSPORTATION

12-6-11

REVISIONS

DATE	CHANGE

This document was originally issued and sealed by Roger Weigel, Registration Number PE- 2930, on 12/06/11 and the original document is stored at the North Dakota Department of Transportation

PAVEMENT MARKING

D-762-4

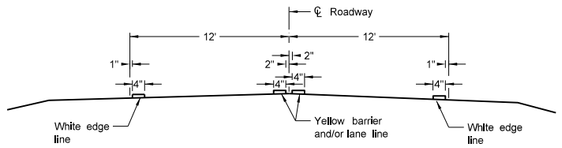

Two Lane Two Way
RURAL ROADWAY

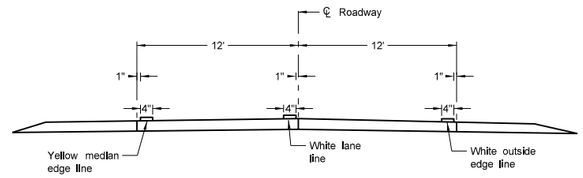

Two Lane Roadway
INTERSTATE HIGHWAY
Concrete Section

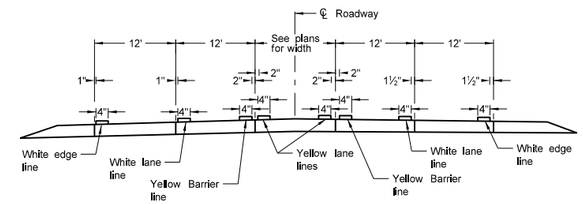

RURAL FIVE LANE ROADWAY
Concrete Section

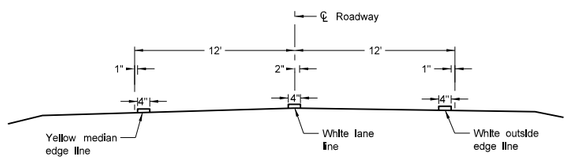

Two Lane Divided
Rural Roadway
PRIMARY HIGHWAY
Asphalt Section

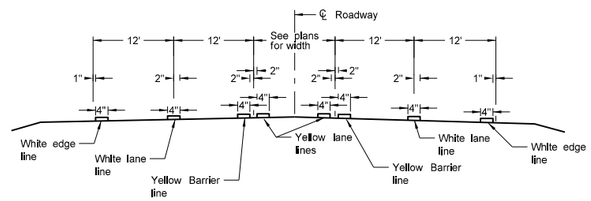

RURAL FIVE LANE ROADWAY
Asphalt Section

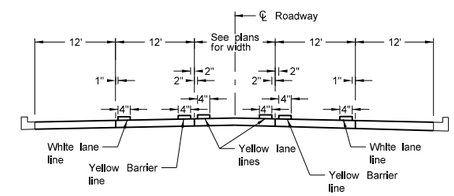

URBAN FIVE LANE SECTION
Concrete Section

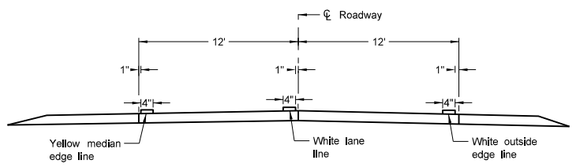

Two Lane Roadway
PRIMARY HIGHWAY
Concrete Section

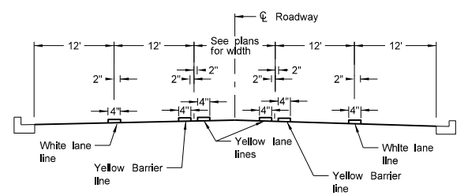

URBAN FIVE LANE SECTION
Asphalt Section

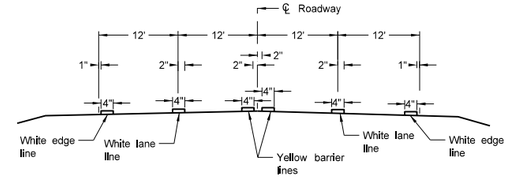

RURAL FOUR LANE ROADWAY
Asphalt Section

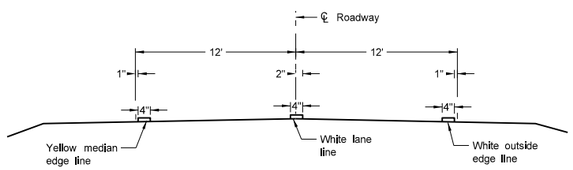

Two Lane Roadway
INTERSTANGE HIGHWAY
Asphalt Section

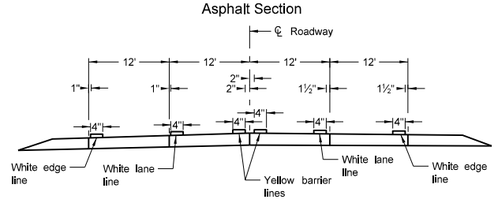

RURAL FOUR LANE ROADWAY
Concrete Section

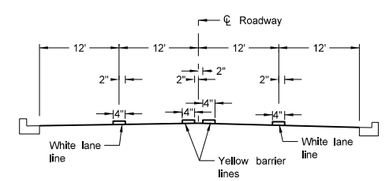

URBAN FOUR LANE SECTION
Asphalt Section

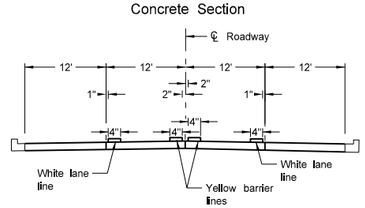

URBAN FOUR LANE SECTION
Concrete Section

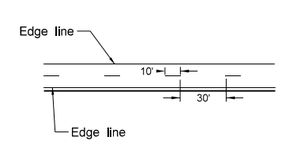

CENTERLINE PAVEMENT MARKING SKIP SPACING DETAIL

NOTES:

1. Edge lines shall be continued through private drives and field drives and broken for intersections.

NORTH DAKOTA DEPARTMENT OF TRANSPORTATION	
12-1-10	
REVISIONS	
DATE	CHANGE

This document was originally issued and sealed by Roger Weigel, Registration Number PE- 2930, on 12-1-10 and the original document is stored at the North Dakota Department of Transportation