DESIGN DATA				
Traffic	Average Daily			Max.Hr.
Current 2012	Pass: 2,365	Trucks: 460	Total: 2,825	285
Forecast 2032	Pass: 3,525	Trucks: 800	Total: 4,325	435
Clear Zone Distance: 4:1 - 42 ft 10:1 - 28 ft		Design Speed: 65 mph		
Minimum Sight Dist. for Stopping: 645 ft		Bridges: N/A		
Sight Dist. for No Passing Zone: 1,100 ft				
Pavement Design Life 20 (years)		Design ESALs: 2,018,222		

STATE	PROJECT NO.	PCN	SECTION NO.	SHEET NO.
ND	SOIB-SOI-4-023(019)087	19376	1	1

JOB # 8
NORTH DAKOTA
DEPARTMENT OF TRANSPORTATION

SOIB-SOI-4-023(019)087

Ward County
Junction ND 28 East to RP 96

Grading, Full Depth Reclamation,
HMA, Grade Raises, Signing

GOVERNING SPECIFICATIONS:
2014 Standard Specifications adopted by the North Dakota Department of Transportation and the Supplemental Specifications effective on the date the project is advertised.

PROJECT NUMBER \ DESCRIPTION	NET MILES	GROSS MILES
SOIB-SOI-4-023(019)087	8.800	8.800

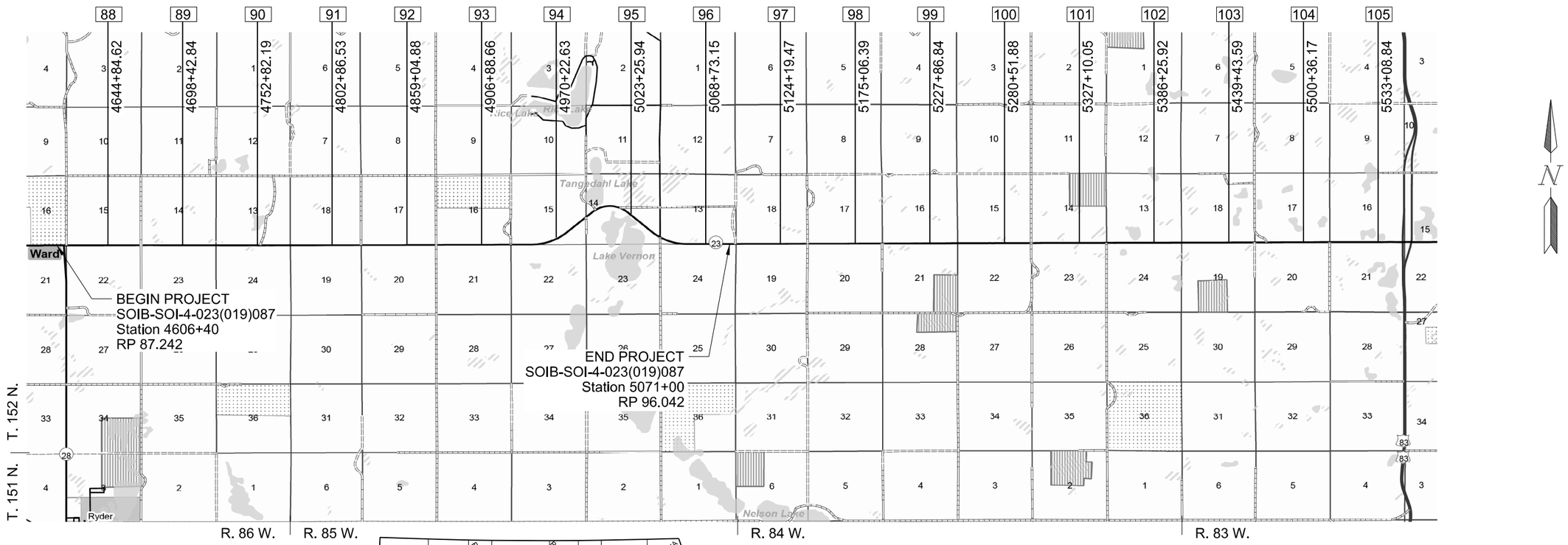

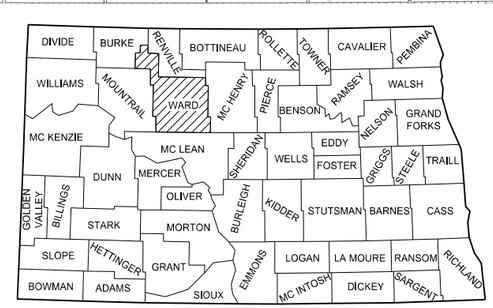

STATE COUNTY MAP

DESIGNERS

Adam M. Ruud

Steven L. Strack

DISTRICT REVIEW

James L. Redding /s/
MINOT DISTRICT

APPROVED DATE November 3, 2015

Robert Fode /s/
OFFICE OF PROJECT DEVELOPMENT
ND DEPARTMENT OF TRANSPORTATION

I hereby certify that the attached plans were prepared by me or under my direct supervision and that I am a duly registered professional engineer under the laws of the state of ND.

APPROVED DATE October 28, 2015

Jeffrey T. Lansink /s/
HOUSTON ENGINEERING INC, FARGO ND

This document was originally issued and sealed by Jeffrey T. Lansink Registration Number PE- 5244, on 11/3/15 and the original document is stored at the North Dakota Department of Transportation

TABLE OF CONTENTS

Section No.	Sheet No.	Description
1	1	Title Sheet
2	1-2	Table of Contents
4	1-2	Scope of Work
6	1-4	Notes
6	5-8	Environmental Commitments
8	1-2	Quantities
10	1-2	Basis of Estimate
11	1	Quantity Summary
11	2-14	Aggregate Calculations
11	15-28	Earthwork Tables
11	29	Mass Diagram
11	30	Superelevation Table
11	31-32	GPR Data
20	1-11	Details
30	1-15	Typical Sections
50	1	Pipe Data
51	1-4	Allowable Pipe Material List
60	1-26	Plan & Profile Sheets
75	1-16	Wetland & Environmental Impacts
76	1-16	Temporary Erosion Control and Temporary Seeding
77	1-12	Permanent Erosion Control and Permanent Seeding
81	1-5	Coordinate and Curve Data and Survey Control
82	1-9	Survey Data Layout
100	1-9	Work Zone Traffic Control
110	1-26	Signing
120	1-12	Pavement Marking Layout
180	1-5	Pit Plats
200	1-169	Cross Sections

SPECIAL PROVISONS

SP 3(14)	Temporary Erosion and Sediment Best Management Practices
SP 38(14)	Flexible Pavement Surface Tolerance M&B
SP 229(14)	Permissible Discount
SP 5024(14)	Permits and Environmental Considerations

LIST OF STANDARD DRAWINGS

Standard No.	Description
D-101-1, 2, 3, 10	Abbreviations
D-101-20, 21	Linestyles
D-101-30, 31, 32	Symbols
D-203-08	Standard Rural Approaches
D-704-2	Traffic Control for Coring of Hot Bituminous Pavement
D-704-5	Contractor Sign Detail
D-704-7, 8	Breakaway Systems for Construction Zone Signs
D-704-9-14	Construction Sign and Barricade Assembly Details
D-704-15, 19, 20, 22, 24, 26	Construction Sign and Barricade Location Details
D-704-27	Traffic Control Plan for Moving Operations
D-704-30	Windrow Marking
D-704-50	Portable Sign Support Assembly
D-704-56	Mobile Operation (Grinding Shoulder Rumble Strips)
D-706-1	Bituminous Laboratory
D-708-6	Erosion and Siltation Controls - Median or Ditch Inlet Protection
D-714-1	Reinforced Concrete Pipe Culverts and End Sections (Round Pipe)
D-714-4	Round Corrugated Steel Pipe Culverts and End Sections
D-714-8	4’ X 6’ Standard Sectional Concrete Cattle Pass (W/Steel Fabric Reinf)
D-714-11	Traversable End Sections For Corrugated Steel Pipe Culverts
D-714-16	Jacked and Bored Pipe
D-714-22	Concrete Pipe or Precast Concrete Box Culvert Ties
D-714-25	Transverse Mainline Pipe Excavation and Installation Detail for Pipes More Than 4 Feet Below The Top
D-714-26	Transverse Mainline Pipe Excavation and Installation Detail for Pipes 4 Feet or Less Below the Top
D-714-28	Transverse Mainline Pipe Excavation and Installation Detail for Pipes Installed in New Embankment
D-720-1	Standard Monuments and Right of Way Markers
D-752-4	Concrete Cattle & Stockpass Fencing Standard
D-754-1	Pipe or W-Shape Assembly Details
D-754-9	Letter and Arrow Details for Variable Length Signs
D-754-12	Breakaway Coupler System – Structural Details for W-Shape Supports
D-754-13	Breakaway System Structural Details for W-Shape Supports
D-745-14	Wind Beams and Anchor Plates for W-Shape Supports
D-754-19	(Conventional Use) Reference Markers
D-754-21	Reflectorized Delineators
D-754-23	Perforated Tube Assembly Details
D-754-24A	Breakaway Coupler System for Perforated Tubes
D-754-24, 25	Mounting Details Perforated Tube
D-754-26, 27, 29, 31, 32, 37	Sign Punching, Stringer, and Support Location Details Regulatory, Warning, and Guide Signs
D-754-47, 48, 49	Sign Punching, Stringer, and Support Location Details for Variable Length Signs
D-754-51, 55, 57, 59, 60, 72	Sign Punching, Stringer, and Support Location Details – Route Marker Signs

LIST OF STANDARD DRAWINGS

Standard No.	Description
D-754-74	Sign Punching, Stringer, and Support Location Details – Route Marker Signs
D-754-83	Object Markers - Culverts
D-754-87	Sign Punching, Stringer, and Support Location Details for Street Name Signs and 911 Signing
D-760-3	Rumble Strips Undivided Highways (Shoulders 4’ or Greater)
D-762-1	Pavement Marking Message Details
D-762-3	Pavement Marking Standard 90 Degree Flared Intersection
D-762-4	Pavement Marking
D-762-6	Short Term Pavement Marking
D-766-1	Mailbox Location Details

STATE	PROJECT NO.	SECTION NO.	SHEET NO.
ND	SOIB-SOI-4-023(019)087	4	1

88 Reference Marker

Full Depth Reconstruction, 6" Superpave FAA 45 on 18" Salvaged Base

3' Subgrade Removal, Full Depth Reconstruction, 6" Superpave FAA 45 on 18" Salvaged Base

Full Depth Reclamation, 6" Superpave FAA 45 on 18" Blended Base

Construct Grade Raise, Full Depth Reconstruction, 6" Superpave FAA 45 on 18" Salvaged Base

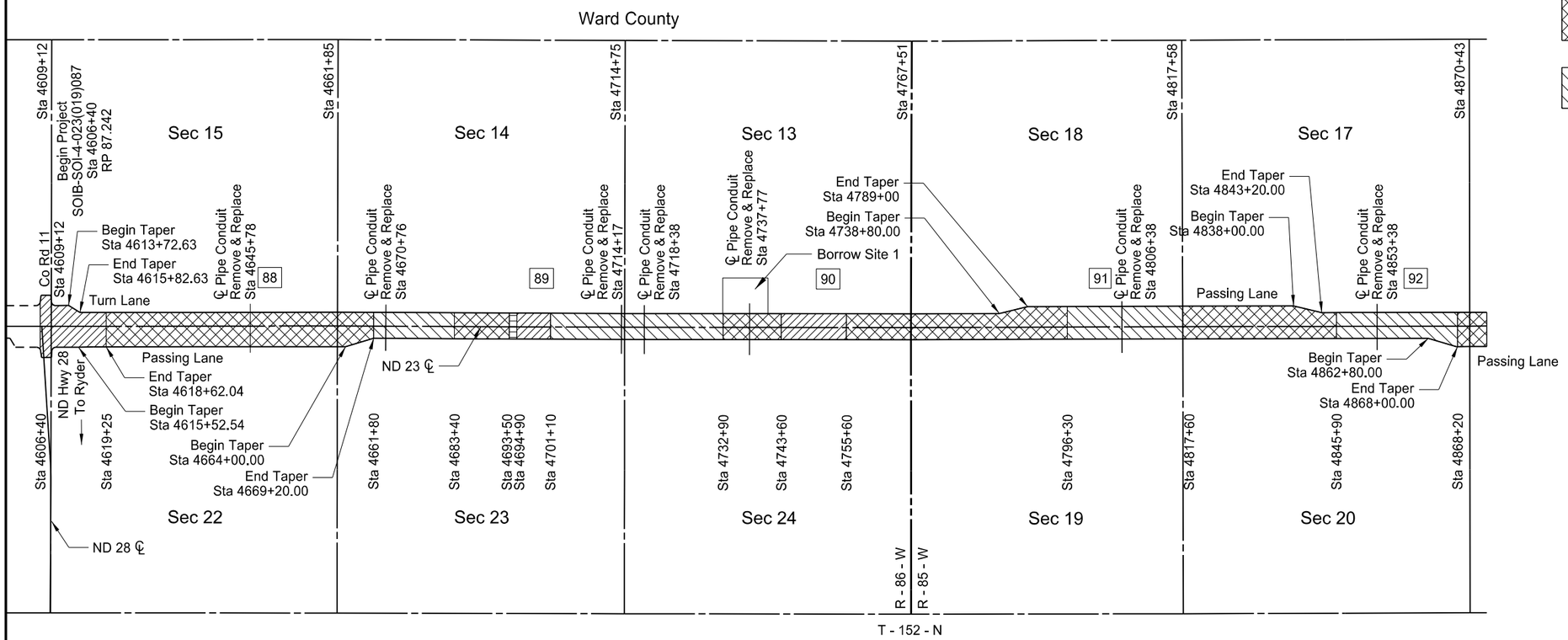

N

This document was originally issued and sealed by Jeffrey T. Lansink Registration Number PE- 5244, on 11/3/15 and the original document is stored at the North Dakota Department of Transportation

Scope of Work

ND 23 - ND 28 to County Rd 13

STATE	PROJECT NO.	SECTION NO.	SHEET NO.
ND	SOIB-SOI-4-023(019)087	4	2

92 Reference Marker

Full Depth Reconstruction, 6" Superpave FAA 45 on 18" Salvaged Base

3' Subgrade Removal, Full Depth Reconstruction, 6" Superpave FAA 45 on 18" Salvaged Base

Full Depth Reclamation, 6" Superpave FAA 45 on 18" Blended Base

Construct Grade Raise, Full Depth Reconstruction, 6" Superpave FAA 45 on 18" Salvaged Base

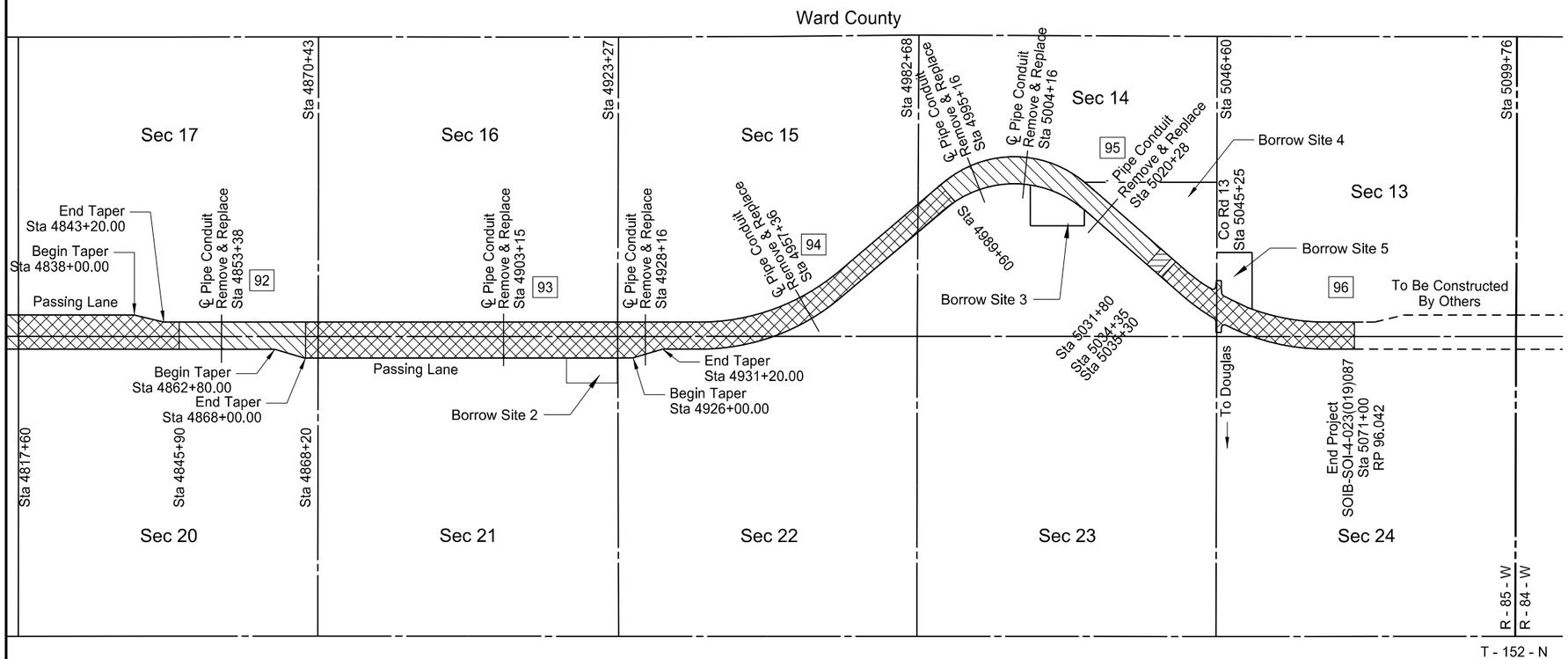

This document was originally issued and sealed by Jeffrey T. Lansink Registration Number PE- 5244, on 11/3/15 and the original document is stored at the North Dakota Department of Transportation

Scope of Work

ND 23 - ND 28 to County Rd 13

STATE	PROJECT NO.	SECTION NO.	SHEET NO.
ND	SOIB-SOI-4-023(019)087	6	1

NOTES

GENERAL NOTES

100-021 WEEKLY PLANNING/REPORTING MEETING: Organize a weekly meeting to coordinate efforts between subcontractors, utilities, local authorities, and others.

Send a knowledgeable representative to conduct the weekly reporting/planning meeting. Prepare minutes for each meeting and make the appropriate distribution of the minutes. Have the minutes approved by the Engineer before distribution.

Provide a written schedule of the next week's work and a tentative schedule of the following week. Include a discussion of problems encountered during the current week; also include information of interest to local authorities, subcontractors, and utilities.

Invite interested agencies to the meeting. Include the following agencies and any other agencies that are necessary:

a. North Dakota Department of Transportation
b. Local Government Agencies
c. Police department
d. Fire department
e. Ambulance service
f. Telephone Co.
g. Power Co.
h. Cable T.V.
i. Gas Co.
j. Railroad Co.
k. Subcontractors
l. Chamber of Commerce
m. FHWA

100-P01 GENERAL: The Engineer will see to the removal of existing fences where needed along the highway right of way. The Contractor shall work around utility poles, (within the construction limits), that are not to be disturbed.

100-P02 COORDINATION OF PROJECTS: Contractor shall be aware of other projects in and around the area. Other projects that are proposed to be completed in the same timeline include, but is not limited to SOIB-4-023(026)096.

105-P01 UTILITY COORDINATION: A Utility Coordination Meeting is required on this project.

105-P02 UTILITY COORDINATION: All work under this contract performed in proximity to energized electrical conductors shall conform to the provisions and requirements, with any amendments hereto, of O.S.H.A. Safety and Health Regulations for Construction, in particular but not limited to subpart 1926.550 and any amendments thereto. Central Power recommends maintaining the following clearances at and around 46kV transmission lines: no disturbance of ground within 15-foot radius around each transmission line structure and anchors, horizontal distance of 10'-0" and vertical clearance of 17'-0" away from the energized overhead phase conductor at all times. These recommended clearances are provided to keep workers safe during the construction activities required on the proposed road construction projects.

105-P03 MISSILE CABLE: The contractor shall notify the Minot AFB Cable Affairs Office a minimum of 72 hours prior to any excavation near the missile cable crossing at stations 4618+28 (+/-) and 4726+15 (+/-). The office may be contacted at (701) 723-6053. The USAF personnel will establish the location and the depth of the existing missile cable prior to the contractor's excavation near these locations.

No scarification shall take place within 10 feet of the existing missile cable crossings.

107-P01 CULTURAL RESOURCE: Cultural Resources were identified near the project. Contractor shall avoid the areas identified: Contact Cultural Resources Section, Jeani Borchert, 701-328-4378, or Robert Christensen, 701-328-4539, so that fieldwork can be scheduled, 1 week prior to construction in areas adjacent to cultural sites. NDDOT Cultural Resources Section Personnel and representatives from the Three Affiliated Tribes THPO office need to monitor earth disturbing activities on backslopes within these identified areas. Safety fence has been included in the quantities for placement around the sites identified in the plans.

107-P02 HAUL ROAD RESTRICTIONS: The Contractor shall contact the appropriate County, Township or City officials to determine if there are any "No Haul Routes" prior to preparing a bid for this project. No paved County or Township roads shall be used as haul roads.

200-010 SHRINKAGE: 25% additional volume is included for shrinkage in earth embankment above water elevations. 50% additional volume has been included for shrinkage and material loss below water elevations.

203-P01 COMMON EXCAVATION-TYPE A: All costs associated with the construction of ditch blocks, removal of foundation, flattening of slopes for centerline pipe extensions, wetland excavation, and the flattening of approaches shall not be bid separately but included in the unit price bid for "Common Excavation – Type A" and "Borrow-Excavation".

203-P02 COMMON EXCAVATION – TYPE A: Determine the optimum moisture and density, as specified in ND T 180, for each type of material encountered that requires compaction control. Perform a multi-point test using a minimum of 4 points. Submit the results to the Engineer along with a split sample of each material.

The Engineer will perform a single point comparison test using the same procedure to verify results. The Contractor's verified results will be used to determine in place density of material.

This document was originally issued and sealed by Jeffrey T. Lansink Registration Number PE-5244, On 11/3/2015 and the original document is stored at the North Dakota Department of Transportation

NOTES

203-P03 TOPSOIL: Removal quantities were developed on a basis of 4 inch depth over the disturbed areas.

203-P04 AVERAGE HAUL: Dead haul from the borrow pits to the point of entry into the mass diagram has not been included in the average haul calculations. Dead haul will not be used to calculate any haul.

203-P05 KEYWAY/BERM: A keyway/berm shall be constructed in areas where the inslope extends into the water at locations as shown on the plans. The keyway/berm shall be constructed as shown in the details and typical sections in the plans. The keyway/berm shall be removed in its entirety at pipe locations after the new pipes have been installed. In addition, the keyway/berm shall be removed to one foot below the existing water elevation after the riprap is placed. The contractor is required to remove this described embankment and will not be allowed to push the embankment into the water so it is below the water elevation. The removed embankment shall then become property of the contractor and shall be disposed of outside the highway right of way in accordance with Section 107.17.

If the contractor elects to dispose of the removed keyway/berm embankment within other areas on the project, the contractor will not be paid for this material a second time. The contractor will only be paid for borrow material removed from the borrow site.

All costs of material, dewatering, construction, removal, and disposal of the keyway, berm shall be included in the price bid for “Borrow-Excavation”. The quantity of borrow needed to construct the keyway/berm is included in the quantities for “Borrow-Excavation”.

203-P06 DISCRETIONARY SUBCUT: An additional 2,000 LF of 18” subcut has been included to be used at the Engineer’s discretion. All discretionary subcut shall be paid for as “Common Excavation-Subcut”. An additional quantity of 8,000 SY of Geosynthetic Material Type R1 has been included to be used in lieu of Subgrade Preparation-Type A-12IN at the Engineer’s discretion

203-P07 DEPARTMENT OPTIONED BORROW: Department-Optioned borrow sites shown in the plans have been approved for use by the Contractor. All borrow site agreements will expire over the duration of the project as listed below:

- Site 1 October 28, 2016
- Site 2 February 7, 2017
- Site 3 October 21, 2016
- Site 4 November 27, 2017
- Site 5 October 21, 2016

All sites must be opened prior to the dates listed above or the contracts will expire.

The remaining borrow material shall be Contractor-Furnished and shall meet all requirements as specified in Section 203 of the Standard Specifications. All costs associated for obtaining, hauling, placing and compacting borrow material shall be included in the price bid for “Borrow-Excavation”.

230-P01 SUBGRADE PREPARATION-TYPE A-12IN: Subgrade preparation Type A-12” will be required for the reconstruction areas identified in the plans.

230-P02 SUBGRADE PREPARATION: If the top of subgrade for the proposed shoulders is higher than the top of subgrade of the existing roadway, the Contractor shall match the existing subgrade elevation and install additional aggregate material to allow for subgrade drainage. All costs associated with the manipulation of the existing subgrade shall be included in the price bid for other items.

256-P01 RIPRAP-SALVAGED: The existing 175 CY of riprap along the south edge of ND 23 near RP 95.11 shall be removed and salvaged. The salvaged material shall be reused for slope protection of the permanent grade raise. All costs associated with removing, salvaging, stockpiling and placing of riprap shall be included in the price bid for “Riprap-Salvaged”.

261-P01 EROSION CONTROL: Erosion control has been provided for placement prior to disturbing the topsoil or as indicated by the engineer. Locations are shown in the erosion control plan. 15,000 LF of 20” Fiber Rolls and 8 acres of seeding and mulching has been provided for the State Optioned Borrow Areas. An additional 2,000 LF of 12” Fiber Rolls, 1,000 LF of 20” Fiber Rolls, and 5,000 LF of Silt Fence Unsupported have been provided to be used at the engineer’s discretion.

302-P01 SURFACE TOLERANCE: The surface of the completed base shall meet specifications for Surface Tolerance Type B.

302-P02 SALVAGED BASE COURSE: A temporary aggregate wedge shall be placed at both ends of all the regrade sections to provide a smooth transition from the existing pavement to the top of the new aggregate base. Transitions shall be placed at 50 feet per inch and shall be maintained until paved. All costs to install, remove, and maintain these aggregate wedges shall not be bid separately but included in the unit price bid for “Salvaged Base Course”.

302-P03 SALVAGED BASE COURSE: An additional 23,783 tons of salvaged base course has been provided for maintaining traffic. The aggregate shall be used for temporary widening and as directed by the Engineer in the field.

302-P04 SALVAGED BASE COURSE: The Contractor shall maintain a stockpile of 500 tons of salvaged base course on the project for use in repairing the roadway to maintain traffic through the project.

302-P05 SALVAGED BASE COURSE: A vertical edge (coulter cut) shall be created in all widening areas as shown in Section 30. All costs associated with constructing the vertical edge and removing existing material shall not be paid for separately but included in the price bid for Salvaged Base Course.

401-100 TACK COAT: When MS-1 is used for tack coat, it may be diluted by the supplier or the Contractor.

430-P01 HOT BITUMINOUS PAVEMENT: The 5.5 inch pavement section shall be paver laid in three lifts. The bottom two lifts shall be PG 58-28 Asphalt Cement. The top lift shall be PG 64-34 Asphalt Cement.

430-P02 PAVING SEAMS: All seams must be at least 11.5’ from the centerline of the roadway unless a hot seam is used. Hot seams can be located at any offset distance. A hot seam will be defined as a seam created when two pavers are paving at the same time, with no more than 300’ between the pavers. The seam must be rolled in a way to join and hide the seam so it is not visible to the traveling public.

704-016 TRAFFIC CONTROL SUPERVISOR: A traffic control supervisor shall be provided on this project.

704-P01 TRAFFIC CONTROL PHASING: Traffic control was developed in two phases for the project.

Phase 1 consists of maintaining head to head traffic on the existing roadway while the Contractor widens the roadway to one side.

Phase 2a consists of head to head traffic shifted to the widened side of the roadway, while the Contractor places embankment, aggregate base and the blended base operation on the opposite half of the roadway.

Phase 2b consists of head to head traffic shifted to the side of the roadway blended in Phase 2a, while the Contractor places embankment, aggregate base and the blended base operation on the opposite half of the roadway.

Phases 2c and 2d consist of head to head traffic on one half of the roadway, while the other half is paved.

This document was originally issued and sealed by Jeffrey T. Lansink Registration Number PE-5244, On 11/3/2015 and the original document is stored at the North Dakota Department of Transportation

NOTES

704-P02 TRAFFIC CONTROL FOR SHOULDER DROP-OFF: If the contractor is unable to make the driving lane and shoulder even at the end of the day, the contractor shall sign the shoulder and provide a 4:1 slough. When no obstructions/hazards are present on the roadway inslope, throughout the ditch bottom, and approved by the engineer a 3:1 slough may be used. No slough will be required for drop-offs of 1 1/2" or less in depth. Signing shall consist of “Shoulder Drop Off” signs (Sign No. W8-9a-48), and a supplemental plate (Sign No. W20-52-54), identifying the distance in advance of the beginning of the shoulder drop off, each mile thereafter, and at major intersections. A major intersection shall be defined as a CMC, U.S. highway, or state highway.

Stackable Vertical Panels will be placed at 50’ spacing through the areas with shoulder drop-offs. Vertical panels have been provided for both shoulders for 1 mile of drop-off.

These traffic control signs and vertical panels shall be in place until the shoulder is even. These signs and vertical panels are included in the “Traffic Control Devices List” and will be measured and paid for at the contract unit price for each device. No extra compensation will be allowed for relocation due to work progression.

704-P03 TRAFFIC CONTROL DEVICES: The traffic control devices list has been developed using the layouts shown in the plans and the following layouts shown on the Standard Drawings.

D-704-2 Traffic Control For Coring of Hot Bituminous Pavement

D-704-15 Layout Type A: To be used throughout the limits of the project. Flag persons and pilot car will be required as needed.

D-704-15 Layout Type B: Temporary Bypass locations.

D-704-20 Layout Type G: Intersecting Routes.

D-704-22 and D-704-26, Layouts Type K, Type L, and Type Y for Construction Truck Hauling Material. Type M is to be used for temporary detours at centerline culvert installations.

D-704-24 Layouts Type U, Type R, and Type S for Shoulder Work.

D-704-26 Layouts Type BB, CC, EE, FF, and GG as needed.

D-704-27 Pavement Marking

D-704-30 Windrow Marking

D-704-56 Mobile Operation (Grinding Shoulder Rumble Strips)

704-P04 TRAFFIC CONTROL: Newly constructed passing lanes shall remain closed to traffic until all pavement marking and permanent signing is completed. Enough traffic control devices have been provided for the closure of all passing lanes within the project.

704-P05 CENTERLINE PIPE REPLACEMENT: The contractor shall have a minimum of one lane of traffic open to public travel during the replacement of all centerline pipes. If the contractor is unable to complete the centerline pipe replacement work at each location in one working day, the area shall be made traversable for two lanes of traffic with 4:1 slopes or flatter and there shall be no drop-offs greater than 2 inches or be flagged 24 hours per day. The cost to provide flaggers outside of working hours shall be at the contractor’s expense. Surfacing removal has been provided to accommodate excess excavation to maintain traffic. Excess excavation is any excavation 24” below the proposed profile and outside the trench excavation limits. All costs to remove this excess excavation in order to maintain traffic and replace in accordance with ND T 180 shall not be bid separately but included in the price bid for the corresponding size of “Pipe Conduit”. To maintain traffic, a fifteen foot wide driving surface shall be provided with the use of flaggers or a thirty foot wide driving surface with the use of traffic control devices (D-704-15 Type B). Minimum cover depths over the pipe will be maintained whenever traffic is allowed over the pipe. Minimum cover depths can be obtained from the North Dakota Department of Transportation Design Manual Section V-05 Appendix A.

704-P06 ALTERNATE ROUTE: An alternate route shall be paid for and installed as part of project SOIB-4-023(026)096.

706-P01 FIELD OFFICE: The contractor shall provide a field office which meets the following requirements:

1. The field office shall be a minimum of 450 square feet.
2. Indoor bathroom facilities
3. Air conditioner (20,000 BTU minimum)
4. Lighting (lumens required 110 foot-candles)
5. Minimum of 3 phone jacks (NDDOT to pay for phone service)
6. Heat, electric, sewer, and water hookups to be furnished by contractor, contractor to pay utility bills.
7. Cabinet space of a minimum of 32 cubic feet.
8. Counter space of a minimum of 40 square feet.
9. The floor is to be free of protrusions so that it will accommodate required office equipment.
10. Contractor furnished office equipment includes a minimum of three desks, two tables and seven chairs.
11. Scanner/printer/photocopy machine capable of 11x17 photocopies and toner to last the duration of the project. NDDOT will provide paper.
12. Minimum of 3 chairs.
13. Minimum of 3 desks.
14. Furnish and install functioning lightning rod.
15. The location of the field office shall be on, or as close to the project as possible and approved by the Engineer. Any rental fees shall be paid by contractor.
16. The field office shall be available for occupancy one week prior to the start of the project and remain available to project completion.
17. The following services will be furnished and paid for by the NDDOT or contracted Construction Engineering Consultant and requested through the Work Management System:
    1. Telephone
    2. Broadband internet service include State Network access

All requirements of the Field Office are subject to approval by the Engineer. Payment for the field office shall be under the bid item “Field Office.”

This document was originally issued and sealed by Jeffrey T. Lansink Registration Number PE-5244, On 11/3/2015 and the original document is stored at the North Dakota Department of Transportation

NOTES

714-P01 CATTLE PASS: CL 3 or CL 5 backfill material required for the installation of the cattle pass sections and relaying of the cattle pass end sections shall not be bid separately but included in the price bid for “Cattle Pass Conc Intermed Section” and “Remove and Relay Conc Cattle Pass End Section”.

714-P02 COFFERDAMS: Cofferdams may be required to construct the centerline culverts. Upon completion of the culvert installation, the earthen material that was used for the cofferdam shall be removed and shall be considered waste material. Waste material may be used on approach inslopes if approved by the engineer or hauled to an approved site in accordance with Section 107.17 of the Standard Specifications. The Contractor shall be responsible for obtaining any permits required if constructing the cofferdams causes impacts beyond the impact area shown in Section 075 of the plans. All costs associated with completing the above described work shall be included in the price bid for “Pipe Conduit_IN”.

754-P01 REMOVE SIGNS AND SUPPORTS: Existing signs and supports designated for removal shall be removed and become property of the Contractor. All removed signs and supports shall be disposed of offsite. All costs associated with the removal and disposal of the existing signs shall not be paid for separately but included in the price bid for other items.

760-P01 GRINDING RUMBLE STRIPS: All costs for the use of additional vehicles beyond those shown in Standard Drawing D-704-56 shall be at the Contractor’s expense. A crash truck shall be included in the traffic control operation. Traffic control devices will be moved multiple times during grinding of centerline rumble strips. No additional payment will be made for movement of traffic control devices. The contractor shall fog seal the rumble strips from both directions unless proper coverage can be proven. The cost to fog seal the rumble strips shall not be paid for separately but included in the price bid for Rumble Strips.

This document was originally issued and sealed by Jeffrey T. Lansink Registration Number PE-5244, On 11/3/2015 and the original document is stored at the North Dakota Department of Transportation

ENVIRONMENTAL COMMITMENTS

ENVIRONMENTAL COMMITMENTS: The North Dakota Department of Transportation and the Federal Highway Administration have made environmental commitments to various agencies and the public to secure approval of this project. The environmental commitments are as follows:

COMMITMENT NO. 1: Unavoidable impacts to wetlands will be mitigated onsite, adjacent to the project. Approximately 0.00 natural/jurisdictional, 11.46 natural/non-jurisdictional, 0.00 artificial/jurisdictional, and 0.05 artificial/non-jurisdictional acres of wetlands will be impacted permanently, 2.41 acres of deep water impacts, and 2.34 wetland acres will be impacted temporarily.

ACTION TAKEN/REQUIRED: All natural wetlands (natural/jurisdictional and natural/non-jurisdictional) regardless of size, as well as artificial/jurisdictional wetland greater than 0.10 acre require mitigation. All artificial/non-jurisdictional, deep water, and temporary impacts do not require mitigation. Therefore, 11.46 acres of wetlands will be mitigated through the creation of wetlands on or adjacent to the project area. Negotiations with land owners are ongoing for mitigation sites.

COMMITMENT NO. 2: Unavoidable impacts to the USFWS wetlands will be mitigated at an approved NDDOT mitigation bank. Approximately 0.99 acre of wetlands will be impacted permanently and 0.00 acres of wetlands will be impacted temporarily.

ACTION TAKEN/REQUIRED: 0.99 acre of wetlands will be mitigated at the Vollrath 15/21 mitigation bank.

STATE	PROJECT NO.	SECTION NO.	SHEET NO.
ND	SOI-4-023(019)087	6	6

ENVIRONMENTAL COMMITMENTS

Wetland Impact Table																						
Wetland Number	Location	Cowardin Class.	Wetland Type	Wetland Size (acres)	Wetland Feature	USACE Jurisdictional Wetlands[1]	Wetland Impacts (acres)		Deep Water Impacts		USFWS Easement Impacts (acres)		Wetland Mitigation								
													Mitigation Required			Bank		Onsite			
							Temp.	Perm.	Acres	CY	Temp.	Perm.	EO 11990	USACE	USFWS	Location	acres	Mitigation Location; Ratio	acres	Constructed Site #	Constructed size (acres)
35	T152N R86W Section22	PEMC	Basin	2.59	Natural	No	0.02	0.02	0.00	0.00	0.00	0.00	Y	N	N			59A; (2:1)	0.02	59A	12.94
36	T152N R86W Section22	PEMA	Basin	0.06	Natural	No	0.00	0.00	0.00	0.00	0.00	0.00	N	N	N						
37	T152N R86W Section22	PABF	Basin	5.01	Natural	No	0.00	0.04	0.00	0.00	0.00	0.00	Y	N	N			59A; (2:1)	0.04	59A	12.94
38A	T152N R86W Section23	PABF	Basin	4.87	Natural	No	0.00	0.67	0.20	1,462.51	0.00	0.58	Y	N	Y			59A; (2:1)	0.67	59A	12.94
38B	T152N R86W Section14	PEMC	Basin	7.69	Natural	No	0.00	0.64	0.21	3,294.58	0.00	0.41	Y	N	Y			59A; (2:1)	0.64	59A	12.94
39	T152N R86W Section23	PEMA	Basin	0.23	Natural	No	0.00	0.04	0.00	0.00	0.00	0.00	Y	N	N			59A; (2:1)	0.04	59A	12.94
40A	T152N R86W Section24	PABF	Basin	0.68	Natural	No	0.23	0.40	0.05	86.46	0.00	0.00	Y	N	N			59A; (2:1)	0.40	59A	12.94
40B	T152N R86W Section14	PABF	Basin	8.64	Natural	No	0.10	0.77	0.76	7,202.03	0.00	0.00	Y	N	N			59A; (2:1)	0.77	59A	12.94
41	T152N R86W Section24	PABF	Basin	4.06	Natural	No	0.00	0.22	0.00	0.00	0.00	0.00	Y	N	N			59A; (2:1)	0.22	59A	12.94
42	T152N R86W Section24	PEMC	Basin	4.06	Natural	No	0.02	0.24	0.04	37.10	0.00	0.00	Y	N	N			59A; (2:1)	0.24	59A	12.94
43	T152N R85W Section19	PEMC	Basin	0.67	Natural	No	0.01	0.17	0.00	0.00	0.00	0.00	Y	N	N			59A; (2:1)	0.17	59A	12.94
44	T152N R85W Section18	PEMC	Basin	0.91	Natural	No	0.10	0.27	0.00	0.00	0.00	0.00	Y	N	N			59A; (2:1)	0.27	59A	12.94
45A	T152N R85W Section19	PEM/ABF	Basin	5.62	Natural	No	0.23	0.60	0.21	715.32	0.00	0.00	Y	N	N			59A; (2:1)	0.60	59A	12.94
45B	T152N R85W Section18	PEMC	Basin	8.91	Natural	No	0.25	0.64	0.33	3,357.00	0.00	0.00	Y	N	N			59A; (2:1)	0.64	59A	12.94
46	T152N R85W Section19	PEMA	Basin	0.55	Natural	No	0.00	0.06	0.00	0.00	0.00	0.00	Y	N	N			59A; (2:1)	0.06	59A	12.94
47	T152N R85W Section20	PEMC	Basin	0.64	Natural	No	0.01	0.15	0.00	0.00	0.00	0.00	Y	N	N			59A; (2:1)	0.15	59A	12.94
48A	T152N R85W Section20	PEMA	Basin	0.93	Natural	No	0.03	0.06	0.00	0.00	0.00	0.00	Y	N	N			59A; (2:1)	0.06	59A	12.94
48B	T152N R85W Section17	PEMC	Basin	1.35	Natural	No	0.05	0.02	0.00	0.00	0.00	0.00	Y	N	N			59A; (2:1)	0.02	59A	12.94
49A	T152N R85W Section20	PABF	Basin	5.52	Natural	No	0.12	0.43	0.31	2,313.08	0.00	0.00	Y	N	N			61A; (2:1)	0.43	61A	2.25
49B	T152N R85W Section17	PABF	Basin	4.73	Natural	No	0.07	0.44	0.31	2,562.04	0.00	0.00	Y	N	N			61A; (2:1)	0.44	61A	2.25
50	T152N R85W Section20	PEMC	Basin	1.34	Natural	No	0.00	0.12	0.00	0.00	0.00	0.00	Y	N	N			61B; (2:1)	0.12	61B	4.05
51	T152N R85W Section21	PEMC	Basin	1.21	Natural	No	0.08	0.08	0.00	0.00	0.00	0.00	Y	N	N			61B; (2:1)	0.08	61B	4.05

ENVIRONMENTAL COMMITMENTS

Wetland Impact Table

Wetland Number	Location	Cowardin Class.	Wetland Type	Wetland Size (acres)	Wetland Feature	USACE Jurisdictional Wetlands[1]	Wetland Impacts (acres)		Deep Water Impacts		USFWS Easement Impacts (acres)		Wetland Mitigation								
													Mitigation Required			Bank		Onsite			
							Temp.	Perm.	Acres	CY	Temp.	Perm.	EO 11990	USACE	USFWS	Location	acres	Mitigation Location; Ratio	acres	Constructed Site #	Constructed size (acres)
52	T152N R85W Section21	PEM/ABF	Basin	2.65	Natural	No	0.05	0.19	0.00	0.00	0.00	0.00	Y	N	N			59A; (2:1)	0.19	59A	12.94
53	T152N R85W Section21	PEMC	Basin	0.47	Natural	No	0.02	0.10	0.00	0.00	0.00	0.00	Y	N	N			61B; (2:1)	0.10	61B	4.05
54	T152N R85W Section22	PEMC	Basin	0.89	Natural	No	0.04	0.45	0.00	0.00	0.00	0.00	Y	N	N			61B; (2:1)	0.45	61B	4.05
55	T152N R85W Section22	PEMC	Basin	0.07	Natural	No	0.00	0.00	0.00	0.00	0.00	0.00	N	N	N						
56	T152N R85W Section15	PEMCx	Basin	0.10	Natural	No	0.01	0.002	0.00	0.00	0.00	0.00	Y	N	N			61B; (2:1)	0.002	61B	4.05
57	T152N R85W Section22	PEMA	Basin	0.09	Natural	No	0.00	0.00	0.00	0.00	0.00	0.00	N	N	N						
58	T152N R85W Section15	PABF	Basin	5.00	Natural	No	0.09	0.14	0.00	0.00	0.00	0.00	Y	N	N			61A; (2:1)	0.14	61A	2.25
59	T152N R85W Section14	L2ABG	Basin	351.27	Natural	No	0.22	2.54	0.00	0.00	0.00	0.00	Y	N	N			59A; (1:1)	2.54	59A	12.94
60	T152N R85W Section14	PEMA	Basin	5.84	Natural	No	0.00	0.00	0.00	0.00	0.00	0.00	N	N	N						
61	T152N R85W Section14	PEMC	Basin	1.01	Natural	No	0.05	0.23	0.00	0.00	0.00	0.00	Y	N	N			61A; (1:1)	0.23	61A	2.25
62	T152N R85W Section24	PEMC	Basin	1.16	Natural	No	0.03	0.34	0.00	0.00	0.00	0.00	Y	N	N			61B; (2:1)	0.34	61B	4.05
63B	T152N R85W Section13	PABF	Basin	9.68	Natural	No	0.08	0.36	0.00	0.00	0.00	0.00	Y	N	N			61B; (2:1)	0.36	61B	4.05
150	T152N R85W Section13	PEMA	Drainage Ditch	0.46	Artificial	No	0.08	0.05	0.00	0.00	0.00	0.00	N	N	N						
151	T152N R85W Section14	L2ABG	Basin	65.10	Natural	No	0.29	0.44	0.00	0.00	0.00	0.00	Y	N	N			61B; (2:1)	0.44	61B	4.05
152	T152N R85W Section15	PEMC	Basin	0.21	Natural	No	0.02	0.01	0.00	0.00	0.00	0.00	Y	N	N			61B; (2:1)	0.01	61B	4.05
153	T152N R85W Section15	PEMA	Basin	0.43	Natural	No	0.00	0.00	0.00	0.00	0.00	0.00	N	N	N						
154	T152N R85W Section15	PEMA	Drainage Ditch	0.25	Artificial	No	0.00	0.00	0.00	0.00	0.00	0.00	N	N	N						
155	T152N R85W Section15	PEMA	Basin	0.34	Natural	No	0.02	0.02	0.00	0.00	0.00	0.00	Y	N	N			61B; (2:1)	0.02	61B	4.05
156	T152N R85W Section15	PEMC	Basin	1.00	Natural	No	0.00	0.00	0.00	0.00	0.00	0.00	N	N	N						
157	T152N R85W Section16	PEMA	Basin	0.29	Natural	No	0.00	0.00	0.00	0.00	0.00	0.00	N	N	N						
158	T152N R85W Section16	PEMA	Basin	0.31	Natural	No	0.00	0.00	0.00	0.00	0.00	0.00	N	N	N						
161	T152N R85W Section17	PEMC	Basin	1.13	Natural	No	0.00	0.20	0.00	0.00	0.00	0.00	Y	N	N			204A; (2:1)	0.20	204A	2.46
162	T152N R85W Section17	PEMC	Basin	0.93	Natural	No	0.00	0.00	0.00	0.00	0.00	0.00	N	N	N						

ENVIRONMENTAL COMMITMENTS

Wetland Impact Table

Wetland Number	Location	Cowardin Class.	Wetland Type	Wetland Size (acres)	Wetland Feature	USACE Jurisdictional Wetlands[1]	Wetland Impacts (acres)		Deep Water Impacts		USFWS Easement Impacts (acres)		Wetland Mitigation								
													Mitigation Required			Bank		Onsite			
							Temp.	Perm.	Acres	CY	Temp.	Perm.	EO 11990	USACE	USFWS	Location	acres	Mitigation Location; Ratio	acres	Constructed Site #	Constructed size (acres)
164	T152N R85W Section18	PEMC	Basin	0.28	Natural	No	0.00	0.07	0.00	0.00	0.00	0.00	Y	N	N			204A; (2:1)	0.07	204A	2.46
165	T152N R86W Section13	PEMC	Basin	1.17	Natural	No	0.00	0.11	0.00	0.00	0.00	0.00	Y	N	N			204A; (2:1)	0.11	204A	2.46
166	T152N R86W Section13	PEMA	Basin	0.24	Natural	No	0.02	0.01	0.00	0.00	0.00	0.00	Y	N	N			204A; (2:1)	0.01	204A	2.46
167	T152N R86W Section13	PEMA	Basin	0.07	Natural	No	0.01	0.01	0.00	0.00	0.00	0.00	Y	N	N			61B; (2:1)	0.01	61B	4.05
168	T152N R86W Section13	PEMFd	Basin	14.68	Natural	No	0.00	0.00	0.00	0.00	0.00	0.00	N	N	N						
169	T152N R86W Section13	PEMA	Basin	0.28	Natural	No	0.00	0.07	0.00	0.00	0.00	0.00	Y	N	N			204A; (2:1)	0.07	204A	2.46
171	T152N R86W Section14	PEMF	Basin	11.05	Natural	No	0.00	0.00	0.00	0.00	0.00	0.00	N	N	N						
172	T152N R86W Section14	PABF	Basin	4.21	Natural	No	0.00	0.00	0.00	0.00	0.00	0.00	N	N	N						
174	T152N R86W Section14	PEMC	Basin	0.31	Natural	No	0.00	0.04	0.00	0.00	0.00	0.00	Y	N	N			61B; (2:1)	0.04	61B	4.05
175	T152N R86W Section15	PABF	Basin	3.27	Natural	No	0.00	0.04	0.00	0.00	0.00	0.00	Y	N	N			204A; (2:1)	0.04	204A	2.46
176	T152N R86W Section15	PEMC	Basin	0.65	Natural	No	0.00	0.01	0.00	0.00	0.00	0.00	Y	N	N			204A; (2:1)	0.01	204A	2.46
177	T152N R86W Section15	PEMC	Basin	1.70	Natural	No	0.00	0.00	0.00	0.00	0.00	0.00	N	N	N						
			Totals	**556.88**			**2.34**	**11.51**	**2.41**	**21030.12**	**0.00**	**0.99**							**11.46**		

[1] A wetland Jurisdictional Determination was issued by the USACE on 11/01/2011; NWO-2011-2036-BIS.

[2] All impacts to natural wetlands (natural/jurisdictional and natural/non-jurisdictional), regardless of size, as well as impacts greater than 0.10 acre to artificial/jurisdictional wetlands require mitigation.

[3] All artificial/non-jurisdictional, deep water (impacts greater than 6.6 feet), Other Waters less than 300 linear feet (determined by the USACE on a case by case), and temporary impacts do not require mitigation.

Summary Impact Table

Total Permanent Impact Summary		Temporary Impacts and additional information	
Wetland Type	**Total (Acres)**	**Wetland Type**	**Total (Acres/Lf)**
Natural/JD	0	**Temporary JD**	0
Natural/Non-JD	11.46	**Non-JD Temporary**	2.34
Artificial/JD	0	**Permanent JD >0.10**	0
Artificial /Non-JD	0.05	**Permanent OW**	0
Total	**11.51**	**Temporary OW**	0

STATE	PROJECT NO.	SECTION NO.	SHEET NO.
ND	SOIB-SOI-4-023(019)087	8	1

SPEC	CODE	ITEM DESCRIPTION	UNIT	MAINLINE	TOTAL
103	0100	CONTRACT BOND	L SUM	1	1
103	0200	ESCROW OF BID DOCUMENTATION	L SUM	1	1
201	0330	CLEARING & GRUBBING	L SUM	1	1
202	0153	SAW BITUMINOUS SURFACING-FULL DEPTH	LF	150	150
202	0169	REMOVAL OF END SECTION-ALL TYPES & SIZES	EA	16	16
202	0174	REMOVAL OF PIPE ALL TYPES AND SIZES	LF	2,072	2,072
203	0101	COMMON EXCAVATION-TYPE A	CY	167,377	167,377
203	0108	TOPSOIL-BORROW AREA	CY	16,500	16,500
203	0109	TOPSOIL	CY	82,762	82,762
203	0121	TOPSOIL-WETLAND	CY	11,172	11,172
203	0138	COMMON EXCAVATION-SUBCUT	CY	6,443	6,443
203	0140	BORROW-EXCAVATION	CY	459,597	459,597
203	0180	ROADWAY OBLITERATION	LF	783	783
216	0100	WATER	M GAL	12,151	12,151
230	0165	SUBGRADE PREPARATION - TYPE A - 12IN	STA	175.2	175.2
251	0200	SEEDING CLASS II	ACRE	162.05	162.05
251	1000	WETLAND SEED	ACRE	2.34	2.34
251	2000	TEMPORARY COVER CROP	ACRE	154.12	154.12
253	0101	STRAW MULCH	ACRE	316.17	316.17
255	0101	ECB TYPE I	SY	18,241	18,241
256	0201	RIPRAP GRADE II	TON	29,046	29,046
256	0600	RIPRAP-SALVAGED	CY	175	175
260	0100	SILT FENCE UNSUPPORTED	LF	5,000	5,000
260	0101	REMOVE SILT FENCE UNSUPPORTED	LF	5,000	5,000
261	0112	FIBER ROLLS 12 IN	LF	130,185	130,185
261	0113	REMOVE FIBER ROLLS 12IN	LF	57,066	57,066
261	0120	FIBER ROLLS 20 IN	LF	16,000	16,000
262	0100	FLOTATION SILT CURTAIN	LF	14,050	14,050
262	0101	REMOVE FLOTATION SILT CURTAIN	LF	14,050	14,050
302	0100	SALVAGED BASE COURSE	TON	184,920	184,920
302	0113	AGGREGATE BASE COURSE CL 3	TON	22,955	22,955
306	0105	AGGREGATE CL 3M	TON	73,700	73,700
306	0370	REMOVE AND RELAY BLENDED MATERIAL	SY	58,383	58,383
306	0510	FULL DEPTH RECLAMATION	SY	154,867	154,867
401	0050	TACK COAT	GAL	23,000	23,000
401	0060	PRIME COAT	GAL	76,499	76,499
401	0160	BLOTTER MATERIAL CL 44	TON	1,690	1,690
430	0045	SUPERPAVE FAA 45	TON	75,248	75,248
430	1000	CORED SAMPLE	EA	355	355
430	5828	PG 58-28 ASPHALT CEMENT	TON	2,937	2,937
430	6434	PG 64-34 ASPHALT CEMENT	TON	1,578	1,578
702	0100	MOBILIZATION	L SUM	1	1
704	0100	FLAGGING	MHR	4,000	4,000
704	1000	TRAFFIC CONTROL SIGNS	UNIT	6,888	6,888
704	1052	TYPE III BARRICADE	EA	30	30
704	1060	DELINEATOR DRUMS	EA	300	300
704	1067	TUBULAR MARKERS	EA	300	300
704	1080	STACKABLE VERTICAL PANELS	EA	500	500
704	1081	VERTICAL PANELS-BACK TO BACK	EA	30	30
704	1087	SEQUENCING ARROW PANEL-TYPE C	EA	2	2

STATE	PROJECT NO.	SECTION NO.	SHEET NO.
ND	SOIB-SOI-4-023(019)087	8	2

SPEC	CODE	ITEM DESCRIPTION	UNIT	MAINLINE	TOTAL
704	1185	PILOT CAR	HR	2,000	2,000
704	1500	OBLITERATION OF PVMT MK	SY	433	433
706	0400	FIELD OFFICE	EA	1	1
706	0500	AGGREGATE LABORATORY	EA	1	1
706	0550	BITUMINOUS LABORATORY	EA	1	1
706	0600	CONTRACTOR'S LABORATORY	EA	1	1
709	0151	GEOSYNTHETIC MATERIAL TYPE R1	SY	48,728	48,728
709	0155	GEOSYNTHETIC MATERIAL TYPE RR	SY	43,415	43,415
714	0615	PIPE CONC REINF 24IN CL III	LF	42	42
714	0820	PIPE CONC REINF 30IN CL III	LF	254	254
714	3020	END SECT-CONC REINF 24IN	EA	1	1
714	3023	END SECT-TRAVERSABLE REINF. CONC.24IN	EA	1	1
714	3030	END SECT-CONC REINF 30IN	EA	15	15
714	4105	PIPE CONDUIT 24IN	LF	82	82
714	4106	PIPE CONDUIT 24IN-APPROACH	LF	1,024	1,024
714	4110	PIPE CONDUIT 30IN	LF	1,840	1,840
714	9200	CATTLE PASS CONC INTERMED SECTION	LF	352	352
714	9350	END SECTION CONC CATTLE PASS	EA	2	2
714	9611	REMOVE & RELAY CONC CATTLE PASS END SECTION	EA	8	8
720	0100	MONUMENTS	EA	14	14
720	0110	RIGHT OF WAY MARKERS	EA	138	138
720	0130	IRON PIN R/W MONUMENTS	EA	138	138
720	0135	IRON PIN REFERENCE MONUMENTS	EA	8	8
752	0100	FENCE BARBED WIRE 3 STRAND	LF	1,062	1,062
752	0910	SAFETY FENCE	LF	120	120
752	0922	FENCE REMOVE & RESET	LF	5,870	5,870
752	3140	CORNER ASSEMBLY BARBED WIRE	EA	7	7
754	0110	FLAT SHEET FOR SIGNS-TYPE XI REFL SHEETING	SF	371	371
754	0112	FLAT SHEET FOR SIGNS-TYPE IV REFL SHEETING	SF	336	336
754	0150	DELINEATORS-TYPE A	EA	24	24
754	0206	STEEL GALV POSTS-TELESCOPING PERFORATED TUBE	LF	1,378	1,378
754	0214	GALV STEEL POSTS-W-SHAPE POSTS(TWO OR MORE)	LF	116	116
754	0534	PANEL FOR SIGNS-TYPE IV REFLECTIVE SHEETING	SF	98	98
754	0562	REFERENCE MARKER-TYPE B	EA	9	9
754	0592	RESET SIGN PANEL	EA	7	7
754	0805	OBJECT MARKERS - CULVERTS	EA	85	85
760	0005	RUMBLE STRIPS - ASPHALT SHOULDER	MILE	17.60	17.60
760	0007	RUMBLE STRIPS - ASPHALT CENTERLINE	MILE	8.80	8.80
762	0112	EPOXY PVMT MK MESSAGE	SY	390	390
762	0113	EPOXY PVMT MK 4IN LINE	LF	166,383	166,383
762	0115	EPOXY PVMT MK 8IN LINE	LF	2,739	2,739
762	0117	EPOXY PVMT MK 24IN LINE	LF	48	48
762	0430	SHORT TERM 4IN LINE-TYPE NR	LF	280,708	280,708
766	0120	RESET MAILBOX	EA	5	5

BASIS OF ESTIMATE

Seeding Class II, Temporary Cover Crop and Straw Mulching
Class II, temporary cover crop and straw mulching shall be placed from the edge of the disturbed area or riprap to the edge of the proposed shoulder.

Hot Bituminous Pavement
Superpave FAA 45 @ 2 Ton/CY

PG 58-28 Asphalt Cement @ 6.0%

PG 64-34 Asphalt Cement @ 6.0%

Salvaged Base Course and Aggregate CL 3M @ 1.875 Ton/CY

SS1H Tack Coat @ 0.05 Gal/SY/Lift

Prime Coat @ 0.25 Gal/SY First Application
- Mainline (2 - 12' lanes and 8' Shoulders) – 46,460 Ft x 40 Ft x 1 SY/9 SF = 206,489 SY
  206,489 SY x 0.25 Gal/SY = 51,622 Gal
- Auxiliary Lanes (Lanes and Tapers) – 18,976 SY x 0.25 Gal/SY = 4,744 Gal

Prime Coat @ 0.15 Gal/SY Second Application
- Mainline (2 - 12' lanes and 1' Shoulders) – 46,460 Ft x 26 Ft x 1 SY/9 SF = 134,218 SY
  134,218 SY x 0.15 Gal/SY = 20,133 Gal

Blotter Material CL 44 @ 15 LB/SY

State Optioned Borrow Pits – Erosion Control
Fiber Rolls 20 IN = **15,000 LF**
Topsoil-Borrow Area @ 6"= **16,500 CY**
Seeding & Mulching = **8 Acres**

Water
Water for compaction:
- 20 Gal/TON for Aggregates
- 15 Gal/SY for Blended Base
- 10 Gal/CY for Embankment

Water for dust palliative @ 25 MGal/Mile:
- 8.800 Miles x 25 MGal/Mile = 220 MGal

Riprap – Grade II
Riprap – Grade II @ 1.7 Ton/CY

Rumble Strips
Asphalt Shoulder
8.800 mile x 2 = **17.600 Mile**

Asphalt Centerline
8.800 mile = **8.800 Mile**

Salvaged Base Course for Traffic Service Gravel
Grade Raise Areas
Width 24', Depth 6", 14,270' Length x 2 **= 23,783 Ton**

Stockpile for Emergency Repairs = **500 Ton**

HBP Cored Samples							
	A	B	C	D			
Specification Section	Distance (Ft)÷2000	Lanes	Lifts	Sublots (A × B × C)	Quantity (D × 2)	Quantity (1 per mile)	Unit
ND Hwy 23 - Mainline (46,460 LF)							
430.04 I.2.b(1), "General"	23.23	2	3	140	280	N/A	EA
430.04 I.2.b(2), "Pavement Thickness Determination Cores"	N/A	N/A	N/A	N/A	N/A	9	EA
ND Hwy 23 - Auxiliary Lanes (20,297 LF)							
430.04 I.2.b(1), "General"	10.15	1	3	31	62	N/A	EA
430.04 I.2.b(2), "Pavement Thickness Determination Cores"	N/A	N/A	N/A	N/A	N/A	4	EA
				Total	342	13	EA

This document was originally issued and sealed by Jeffrey T. Lansink Registration Number PE-5244,On 11/3/2015 and the original document is stored at the North Dakota Department of Transportation

BASIS OF ESTIMATE

Short Term 4 In Line – Type NR

3.981 mile (10' Line, 30' Skip) x 1320 LF/Mile

- 1,320 LF/Mile for 10' Line, 30' Skip (5,255 LF)
- 100 LF added to each end of the project (60 LF)
- 1,320 LF/Mile for 10' Line, 30' Skip for rumble strip (5,255 LF)

No Passing Zones

- 29,987 LF Westbound Barrier Line (29,987 LF)
- 29,620 LF Eastbound Barrier Line (29,620 LF)

Subtotal = 70,177 LF/Application

70,177 LF/Application x 4 Applications = **280,708 LF**

No Passing Zones – Westbound (Total 29,987 LF)

- Barrier Line Sta. 4596+88 to Sta. 4676+80 (7,992 LF)
- Barrier Line Sta. 4693+60 to Sta. 4701+40 (780 LF)
- Barrier Line Sta. 4732+95 to Sta. 4739+10 (615 LF)
- Barrier Line Sta. 4750+25 to Sta. 4761+15 (1,090 LF)
- Barrier Line Sta. 4776+20 to Sta. 4938+80 (16,260 LF)
- Barrier Line Sta. 4981+65 to Sta. 4994+20 (1,255 LF)
- Barrier Line Sta. 5036+40 to Sta. 5052+75 (1,635 LF)
- Barrier Line Sta. 5067+40 to Sta. 5071+00 (360 LF)

No Passing Zones – Eastbound (Total 29,620 LF)

- Barrier Line Sta. 4596+88 to Sta. 4676+80 (7,992 LF)
- Barrier Line Sta. 4682+60 to Sta. 4690+40 (780 LF)
- Barrier Line Sta. 4721+95 to Sta. 4727+80 (585 LF)
- Barrier Line Sta. 4739+10 to Sta. 4750+25 (1,115 LF)
- Barrier Line Sta. 4774+55 to Sta. 4938+80 (16,425 LF)
- Barrier Line Sta. 4970+65 to Sta. 4982+85 (1,220 LF)
- Barrier Line Sta. 5025+40 to Sta. 5029+75 (435 LF)
- Barrier Line Sta. 5039+30 to Sta. 5046+38 (708 LF)
- Barrier Line Sta. 5067+40 to Sta. 5071+00 (360 LF)

See Section 120 for Permanent Striping

This document was originally issued and sealed by Jeffrey T. Lansink Registration Number PE-5244,on 11/3/2015 and the original document is stored at the North Dakota Department of Transportation

STATE	PROJECT NO.	SECTION NO.	SHEET NO.
ND	SOIB-SOI-4-023(019)087	11	1

Fencing Summary

Begin Station	End Station	Fence Remove & Reset	Fence Barbed Wire 3 Strand	Corner Assembly Barbed Wire
		LF	LF	EA
4611+90	4613+00	110	-	-
4645+70	4646+55	85	-	-
4648+00	4650+25	225	-	-
4655+00	4656+75	175	-	-
4657+00	4658+00	100	-	-
4669+75	4677+00	725	-	-
Cattle Pass 4685+98		-	577	2
4700+10	4704+05	395	-	-
4714+80	4723+35	855	-	-
4735+65	4742+75	710	-	-
Cattle Pass 4744+17		-	245	3
4763+60	4767+25	365	-	-
4857+00	4861+75	475	-	-
4865+75	4868+00	225	-	-
Cattle Pass 4886+00		-	240	2
4923+25	4923+90	65	-	-
5007+25	5012+05	480	-	-
5013+25	5014+25	100	-	-
5011+50	5013+35	185	-	-
5040+55	5046+30	575	-	-
5046+30	5046+50	20	-	-
Totals		5,870	1,062	7

Aggregate Summary

Item	Aggregate CL 3M Area (SY)	Aggregate CL 3M Mass (Ton)	Aggregate CL 3 Area (SY)	Aggregate CL 3 Mass (Ton)	Salvaged Base Course Area (SY)	Salvaged Base Course Mass (Ton)
Blended Base	154,867	36,158	-	-	-	-
Widen Left	-	-	-	-	-	78,228
Widen Right	-	-	-	-	-	82,977
Reconstruction	-	37,542	-	-	-	-
Material From Millings	-	-	-	-	-	-8,510
Remove & Relay Blended Base	58,383	-	-	-	-	-
Section Line Approaches	-	-	-	-	-	7,118
Private Drive Approaches	-	-	-	-	-	250
Field Drives	-	-	-	-	-	574
Approach Radii	-	-	-	-	-	500
Subcut Areas	-	-	-	22,955	-	-
Temporary Traffic Control	-	-	-	-	-	23,783
Totals		**73,700**		**22,955**		**184,920**

Embankment at Extended Centerline Pipes

Station	Volume Left	Volume Right
4685+98	43.1	78.8
4744+17	11.7	5.3
4806+37	80.5	73.2
4820+15	114.8	17.0
4886+00	99.1	162.2
4928+16	44.9	147.6
5044+28	-	100.6
Total	394.1	584.7

Object Marker - Culvert Location Summary

Station	Location	Station	Location
4632+04	Rt	4888+67	Rt
4632+71	Lt	4903+15	Lt & Rt
4645+78	Lt & Rt	4915+86	Lt & Rt
4661+53	Rt	4922+81	Lt
4662+22	Rt	4922+97	Rt
4670+76	Lt & Rt	4923+59	Rt
4685+98	Lt & Rt	4923+61	Lt
4686+68	Lt & Rt	4928+16	Lt & Rt
4696+18	Lt & Rt	4933+05	Lt
4714+17	Lt & Rt	4933+71	Lt
4718+38	Lt & Rt	4947+10	Rt
4737+77	Lt & Rt	4947+96	Rt
4744+17	Lt & Rt	4957+36	Lt & Rt
4747+04	Rt	4968+66	Lt & Rt
4747+07	Lt	4990+57	Lt
4747+66	Rt	4991+27	Lt
4747+74	Lt	4995+16	Lt & Rt
4767+14	Lt	4998+24	Rt
4767+24	Rt	4998+90	Rt
4767+84	Rt	5004+16	Lt & Rt
4767+90	Lt	5016+29	Lt & Rt
4787+68	Lt & Rt	5020+28	Lt & Rt
4806+38	Lt & Rt	5044+28	Rt
4820+15	Lt & Rt	5044+90	Lt
4843+56	Lt & Rt	5045+58	Lt
4853+38	Lt & Rt	5046+21	Rt
4875+15	Lt & Rt	5046+94	Rt
4886+00	Lt & Rt	5061+13	Lt
4887+99	Rt	5061+84	Lt
4888+16	Lt		
4888+65	Lt	**TOTAL= 85**	

Riprap Placement Summary

Grade Raise	Begin Station	End Station	Rip Rap Quantity (CY)	Rip Rap Quantity (Ton)
RP 88.5	4666+60	4677+50	4,556	7,745
RP 89.5	4704+80	4720+90	3,103	5,275
RP 91	4799+60	4815+10	2,357	4,007
RP 92	4849+10	4865+30	3,602	6,123
RP 95	4999+00	5026+60	3,402	5,783
Culvert Erosion Control			66	113
Totals			**17,086**	**29,046**

Subcut Aggregate Summary

Begin Station	End Station	Subcut Depth (IN)	Aggregate CL 3 Volume (CY)	Aggregate CL 3 Mass (Ton)
4693+50	4694+90	36	1,017	3,448
5033+90	5035+30	36	1,017	3,448
Discretionary Subcut (2000 LF)		18	4,409	16,059
Totals			**6,443**	**22,955**

This document was originally issued and sealed by Jeffrey T. Lansink Registration Number PE- 5244, on 11/3/15 and the original document is stored at the North Dakota Department of Transportation

Data Tables

Aggregate Summary Table

ND 23 - ND 28 to County Rd 13

STATE	PROJECT NO.	SECTION NO.	SHEET NO.
ND	SOIB-SOI-4-023(019)087	11	2

Aggregate Calculations Table

		Aggregate CL 3M								Salvaged Base Course							
		Mine & Blend**				Reconstruct*				Widen Left**				Widen Right**			
Station	Distance (Ft)	End Area (SF)	Volume (CY)	Ton (1.875 Ton/CY)	Accumulated Ton	End Area (SF)	Volume (CY)	Ton (1.875 Ton/CY)	Accumulated Ton	End Area (SF)	Volume (CY)	Ton (1.875 Ton/CY)	Accumulated Ton	End Area (SF)	Volume (CY)	Ton (1.875 Ton/CY)	Accumulated Ton
4606+40		0				30.00				42.10				36.70			
4607+00	60	0	0	0	0	30.00	66.67	125	125	36.70	87.56	164	164	36.70	81.56	153	153
4607+43	43	0	0	0	0	30.00	47.78	90	215	36.70	58.45	110	274	36.70	58.45	110	263
4608+00	57	0	0	0	0	30.00	63.33	119	334	40.00	80.96	152	426	36.70	77.48	145	408
4609+00	100	0	0	0	0	30.00	111.11	208	542	36.70	142.04	266	692	37.30	137.04	257	665
4610+00	100	0	0	0	0	30.00	111.11	208	750	39.40	140.93	264	956	36.70	137.04	257	922
4611+00	100	0	0	0	0	30.00	111.11	208	958	36.70	140.93	264	1,220	36.70	135.93	255	1,177
4612+00	100	0	0	0	0	30.00	111.11	208	1,166	37.30	137.04	257	1,477	36.70	135.93	255	1,432
4613+00	100	0	0	0	0	30.00	111.11	208	1,374	36.70	137.04	257	1,734	36.70	135.93	255	1,687
4613+37	37	0	0	0	0	30.00	41.11	77	1,451	38.00	51.18	96	1,830	36.70	50.29	94	1,781
4614+00	63	0	0	0	0	30.00	70	131	1,582	34.50	84.58	159	1,989	37.80	86.92	163	1,944
4615+00	100	0	0	0	0	30.00	111.11	208	1,790	24.50	109.26	205	2,194	39.80	143.7	269	2,213
4616+00	100	0	0	0	0	30.00	111.11	208	1,998	23.10	88.15	165	2,359	33.20	135.19	253	2,466
4617+00	100	0	0	0	0	30.00	111.11	208	2,206	31.60	101.3	190	2,549	31.60	120	225	2,691
4618+00	100	0	0	0	0	30.00	111.11	208	2,414	22.80	100.74	189	2,738	30.10	114.26	214	2,905
4619+00	100	0	0	0	0	30.00	111.11	208	2,622	22.80	84.44	158	2,896	28.50	108.52	203	3,108
4620+00	100	24	44.44	83	83	0.00	55.56	104	2,726	22.80	84.44	158	3,054	27.70	104.07	195	3,303
4621+00	100	18.9	79.44	149	232	0.00	0	0	2,726	22.80	84.44	158	3,212	27.70	102.59	192	3,495
4622+00	100	21.3	74.44	140	372	0.00	0	0	2,726	22.80	84.44	158	3,370	27.70	102.59	192	3,687
4623+00	100	19.9	76.3	143	515	0.00	0	0	2,726	22.80	84.44	158	3,528	27.70	102.59	192	3,879
4624+00	100	20.6	75	141	656	0.00	0	0	2,726	22.80	84.44	158	3,686	27.70	102.59	192	4,071
4625+00	100	20.3	75.74	142	798	0.00	0	0	2,726	22.80	84.44	158	3,844	27.70	102.59	192	4,263
4626+00	100	21.8	77.96	146	944	0.00	0	0	2,726	22.80	84.44	158	4,002	27.70	102.59	192	4,455
4627+00	100	22.6	82.22	154	1,098	0.00	0	0	2,726	22.80	84.44	158	4,160	27.70	102.59	192	4,647
4628+00	100	21.3	81.3	152	1,250	0.00	0	0	2,726	22.80	84.44	158	4,318	27.70	102.59	192	4,839
4629+00	100	25.3	86.3	162	1,412	0.00	0	0	2,726	22.80	84.44	158	4,476	27.70	102.59	192	5,031
4630+00	100	28.1	98.89	185	1,597	0.00	0	0	2,726	22.80	84.44	158	4,634	27.70	102.59	192	5,223
4631+00	100	27.8	103.52	194	1,791	0.00	0	0	2,726	22.80	84.44	158	4,792	27.70	102.59	192	5,415
4632+00	100	33.1	112.78	211	2,002	0.00	0	0	2,726	22.80	84.44	158	4,950	27.70	102.59	192	5,607
4632+38	38	41.7	52.4	98	2,100	0.00	0	0	2,726	24.20	32.93	62	5,012	29.50	40.07	75	5,682
4633+00	62	35.9	89.34	168	2,268	0.00	0	0	2,726	22.80	54.11	101	5,113	27.70	65.85	123	5,805
4634+00	100	18.8	101.3	190	2,458	0.00	0	0	2,726	22.80	84.44	158	5,271	27.70	102.59	192	5,997
4635+00	100	18.1	68.33	128	2,586	0.00	0	0	2,726	22.80	84.44	158	5,429	27.70	102.59	192	6,189
4635+20	20	17	13	24	2,610	0.00	0	0	2,726	22.80	16.89	32	5,461	27.70	20.52	38	6,227
4635+22	2	16.8	1.25	2	2,612	0.00	0	0	2,726	22.80	1.69	3	5,464	27.70	2.05	4	6,231
4636+00	78	18.8	51.42	96	2,708	0.00	0	0	2,726	22.80	65.87	124	5,588	27.70	80.02	150	6,381
4637+00	100	12.9	58.7	110	2,818	0.00	0	0	2,726	22.80	84.44	158	5,746	27.70	102.59	192	6,573
4638+00	100	22.8	66.11	124	2,942	0.00	0	0	2,726	22.80	84.44	158	5,904	27.70	102.59	192	6,765
4639+00	100	22.8	84.44	158	3,100	0.00	0	0	2,726	22.80	84.44	158	6,062	27.70	102.59	192	6,957
4640+00	100	21	81.11	152	3,252	0.00	0	0	2,726	22.80	84.44	158	6,220	27.70	102.59	192	7,149
4641+00	100	19.4	74.81	140	3,392	0.00	0	0	2,726	22.80	84.44	158	6,378	27.70	102.59	192	7,341
4642+00	100	17.2	67.78	127	3,519	0.00	0	0	2,726	22.80	84.44	158	6,536	27.70	102.59	192	7,533
4643+00	100	19.2	67.41	126	3,645	0.00	0	0	2,726	22.80	84.44	158	6,694	27.70	102.59	192	7,725
4644+00	100	20.2	72.96	137	3,782	0.00	0	0	2,726	22.80	84.44	158	6,852	27.70	102.59	192	7,917
4645+00	100	16.6	68.15	128	3,910	0.00	0	0	2,726	22.80	84.44	158	7,010	27.70	102.59	192	8,109
4645+78	78	14.1	44.34	83	3,993	0.00	0	0	2,726	31.80	78.87	148	7,158	27.70	80.02	150	8,259
4646+00	22	12.5	10.84	20	4,013	0.00	0	0	2,726	22.80	22.24	42	7,200	27.70	22.57	42	8,301
4646+15	15	15.1	7.67	14	4,027	0.00	0	0	2,726	22.80	12.67	24	7,224	27.70	15.39	29	8,330
4647+00	85	16.5	49.74	93	4,120	0.00	0	0	2,726	22.80	71.78	135	7,359	27.70	87.2	164	8,494

*CL 3M aggregate based on an approximate 30 Ft width and 12 In depth.

**End Areas and quantities determined from cross section end areas.

This document was originally issued and sealed by Jeffrey T. Lansink Registration Number PE-5244,On 11/3/2015 and the original document is stored at the North Dakota Department of Transportation

Data Tables
Aggregate Calculations

ND 23 - ND 28 to County Rd 13

STATE	PROJECT NO.	SECTION NO.	SHEET NO.
ND	SOIB-SOI-4-023(019)087	11	3

Aggregate Calculations Table

		Aggregate CL 3M								Salvaged Base Course							
		Mine & Blend**				Reconstruct*				Widen Left**				Widen Right**			
Station	Distance (Ft)	End Area (SF)	Volume (CY)	Ton (1.875 Ton/CY)	Accumulated Ton	End Area (SF)	Volume (CY)	Ton (1.875 Ton/CY)	Accumulated Ton	End Area (SF)	Volume (CY)	Ton (1.875 Ton/CY)	Accumulated Ton	End Area (SF)	Volume (CY)	Ton (1.875 Ton/CY)	Accumulated Ton
4648+00	100	14.3	57.04	107	4,227	0.00	0	0	2,726	22.80	84.44	158	7,517	27.70	102.59	192	8,686
4649+00	100	17	57.96	109	4,336	0.00	0	0	2,726	32.00	101.48	190	7,707	27.70	102.59	192	8,878
4650+00	100	14.5	58.33	109	4,445	0.00	0	0	2,726	31.80	118.15	222	7,929	27.70	102.59	192	9,070
4651+00	100	19	62.04	116	4,561	0.00	0	0	2,726	31.80	117.78	221	8,150	27.70	102.59	192	9,262
4652+00	100	18.2	68.89	129	4,690	0.00	0	0	2,726	22.80	101.11	190	8,340	27.70	102.59	192	9,454
4653+00	100	13.2	58.15	109	4,799	0.00	0	0	2,726	22.80	84.44	158	8,498	27.70	102.59	192	9,646
4654+00	100	9.2	41.48	78	4,877	0.00	0	0	2,726	22.80	84.44	158	8,656	27.70	102.59	192	9,838
4655+00	100	11.5	38.33	72	4,949	0.00	0	0	2,726	22.80	84.44	158	8,814	27.70	102.59	192	10,030
4656+00	100	22.9	63.7	119	5,068	0.00	0	0	2,726	22.80	84.44	158	8,972	27.70	102.59	192	10,222
4657+00	100	19.4	78.33	147	5,215	0.00	0	0	2,726	22.80	84.44	158	9,130	27.70	102.59	192	10,414
4658+00	100	21.3	75.37	141	5,356	0.00	0	0	2,726	22.80	84.44	158	9,288	27.70	102.59	192	10,606
4659+00	100	21.3	78.89	148	5,504	0.00	0	0	2,726	22.80	84.44	158	9,446	27.70	102.59	192	10,798
4660+00	100	18.9	74.44	140	5,644	0.00	0	0	2,726	22.80	84.44	158	9,604	27.70	102.59	192	10,990
4661+00	100	13.1	59.26	111	5,755	0.00	0	0	2,726	22.80	84.44	158	9,762	27.70	102.59	192	11,182
4661+85	85	0	20.62	39	5,794	30.00	47.22	89	2,815	21.40	69.57	130	9,892	27.70	87.2	164	11,346
4662+00	15	0	0	0	5,794	30.00	16.67	31	2,846	22.80	12.28	23	9,915	27.70	15.39	29	11,375
4663+00	100	0	0	0	5,794	30.00	111.11	208	3,054	22.80	84.44	158	10,073	27.70	102.59	192	11,567
4664+00	100	0	0	0	5,794	30.00	111.11	208	3,262	22.80	84.44	158	10,231	27.70	102.59	192	11,759
4665+00	100	0	0	0	5,794	30.00	111.11	208	3,470	22.80	84.44	158	10,389	25.40	98.33	184	11,943
4666+00	100	0	0	0	5,794	30.00	111.11	208	3,678	22.80	84.44	158	10,547	24.00	91.48	172	12,115
4667+00	100	0	0	0	5,794	30.00	111.11	208	3,886	22.80	84.44	158	10,705	23.60	88.15	165	12,280
4668+00	100	0	0	0	5,794	30.00	111.11	208	4,094	22.80	84.44	158	10,863	23.30	86.85	163	12,443
4669+00	100	0	0	0	5,794	30.00	111.11	208	4,302	22.80	84.44	158	11,021	22.90	85.56	160	12,603
4670+00	100	0	0	0	5,794	30.00	111.11	208	4,510	22.80	84.44	158	11,179	22.80	84.63	159	12,762
4670+76	76	0	0	0	5,794	30.00	84.44	158	4,668	22.80	64.18	120	11,299	22.80	64.18	120	12,882
4671+00	24	0	0	0	5,794	30.00	26.67	50	4,718	22.80	20.27	38	11,337	22.80	20.27	38	12,920
4672+00	100	0	0	0	5,794	30.00	111.11	208	4,926	22.80	84.44	158	11,495	22.80	84.44	158	13,078
4673+00	100	0	0	0	5,794	30.00	111.11	208	5,134	22.80	84.44	158	11,653	22.80	84.44	158	13,236
4674+00	100	0	0	0	5,794	30.00	111.11	208	5,342	22.80	84.44	158	11,811	22.80	84.44	158	13,394
4675+00	100	0	0	0	5,794	30.00	111.11	208	5,550	22.80	84.44	158	11,969	22.80	84.44	158	13,552
4676+00	100	0	0	0	5,794	30.00	111.11	208	5,758	22.80	84.44	158	12,127	22.80	84.44	158	13,710
4677+00	100	0	0	0	5,794	30.00	111.11	208	5,966	22.80	84.44	158	12,285	22.80	84.44	158	13,868
4678+00	100	0	0	0	5,794	30.00	111.11	208	6,174	22.80	84.44	158	12,443	22.80	84.44	158	14,026
4679+00	100	0	0	0	5,794	30.00	111.11	208	6,382	22.80	84.44	158	12,601	117.00	258.89	485	14,511
4680+00	100	0	0	0	5,794	30.00	111.11	208	6,590	22.80	84.44	158	12,759	22.80	258.89	485	14,996
4681+00	100	0	0	0	5,794	30.00	111.11	208	6,798	22.80	84.44	158	12,917	85.20	200	375	15,371
4682+00	100	0	0	0	5,794	30.00	111.11	208	7,006	22.80	84.44	158	13,075	22.20	198.89	373	15,744
4683+00	100	0	0	0	5,794	30.00	111.11	208	7,214	22.80	84.44	158	13,233	22.20	82.22	154	15,898
4684+00	100	22.5	41.67	78	5,872	0.00	55.56	104	7,318	22.80	84.44	158	13,391	22.80	83.33	156	16,054
4684+50	50	21.9	41.11	77	5,949	0.00	0	0	7,318	22.80	42.22	79	13,470	22.80	42.22	79	16,133
4685+00	50	19.1	37.96	71	6,020	0.00	0	0	7,318	22.80	42.22	79	13,549	22.80	42.22	79	16,212
4685+48	48	22	36.53	68	6,088	0.00	0	0	7,318	30.30	47.2	89	13,638	22.80	40.53	76	16,288
4685+98	50	30.2	48.33	91	6,179	0.00	0	0	7,318	22.80	49.17	92	13,730	22.80	42.22	79	16,367
4686+00	2	30.5	2.25	4	6,183	0.00	0	0	7,318	22.80	1.69	3	13,733	22.80	1.69	3	16,370
4686+68	68	41.4	90.54	170	6,353	0.00	0	0	7,318	22.80	57.42	108	13,841	22.80	57.42	108	16,478
4687+00	32	47.7	52.8	99	6,452	0.00	0	0	7,318	22.80	27.02	51	13,892	22.80	27.02	51	16,529
4688+00	100	51.8	184.26	345	6,797	0.00	0	0	7,318	22.80	84.44	158	14,050	22.80	84.44	158	16,687
4689+00	100	38.9	167.96	315	7,112	0.00	0	0	7,318	22.80	84.44	158	14,208	22.80	84.44	158	16,845
4690+00	100	28.3	124.44	233	7,345	0.00	0	0	7,318	22.80	84.44	158	14,366	22.80	84.44	158	17,003

*CL 3M aggregate based on an approximate 30 Ft width and 12 In depth.
**End Areas and quantities determined from cross section end areas.

This document was originally issued and sealed by Jeffrey T. Lansink Registration Number PE-5244,On 11/3/2015 and the original document is stored at the North Dakota Department of Transportation

Data Tables
Aggregate Calculations

ND 23 - ND 28 to County Rd 13

STATE	PROJECT NO.	SECTION NO.	SHEET NO.
ND	SOIB-SOI-4-023(019)087	11	4

Aggregate Calculations Table

		Aggregate CL 3M								Salvaged Base Course							
		Mine & Blend**				Reconstruct*				Widen Left**				Widen Right**			
Station	Distance (Ft)	End Area (SF)	Volume (CY)	Ton (1.875 Ton/CY)	Accumulated Ton	End Area (SF)	Volume (CY)	Ton (1.875 Ton/CY)	Accumulated Ton	End Area (SF)	Volume (CY)	Ton (1.875 Ton/CY)	Accumulated Ton	End Area (SF)	Volume (CY)	Ton (1.875 Ton/CY)	Accumulated Ton
4691+00	100	24.6	97.96	184	7,529	0.00	0	0	7,318	22.80	84.44	158	14,524	22.80	84.44	158	17,161
4692+00	100	21.8	85.93	161	7,690	0.00	0	0	7,318	22.80	84.44	158	14,682	22.80	84.44	158	17,319
4692+50	50	20.7	39.35	74	7,764	0.00	0	0	7,318	22.80	42.22	79	14,761	22.80	42.22	79	17,398
4693+00	50	19.7	37.41	70	7,834	0.00	0	0	7,318	22.80	42.22	79	14,840	22.80	42.22	79	17,477
4694+00	100	0	36.48	68	7,902	30.00	55.56	104	7,422	22.80	84.44	158	14,998	31.50	100.56	189	17,666
4694+45	45	0	0	0	7,902	30.00	50	94	7,516	22.80	38	71	15,069	22.80	45.25	85	17,751
4695+00	55	0	0	0	7,902	30.00	61.11	115	7,631	22.80	46.44	87	15,156	22.80	46.44	87	17,838
4696+00	100	0	0	0	7,902	30.00	111.11	208	7,839	22.80	84.44	158	15,314	22.80	84.44	158	17,996
4696+18	18	0	0	0	7,902	30.00	20	38	7,877	22.80	15.2	29	15,343	22.80	15.2	29	18,025
4697+00	82	0	0	0	7,902	30.00	91.11	171	8,048	22.80	69.24	130	15,473	22.80	69.24	130	18,155
4698+00	100	0	0	0	7,902	30.00	111.11	208	8,256	22.80	84.44	158	15,631	22.80	84.44	158	18,313
4699+00	100	0	0	0	7,902	30.00	111.11	208	8,464	22.80	84.44	158	15,789	22.80	84.44	158	18,471
4700+00	100	0	0	0	7,902	30.00	111.11	208	8,672	22.80	84.44	158	15,947	22.80	84.44	158	18,629
4701+00	100	0	0	0	7,902	30.00	111.11	208	8,880	22.80	84.44	158	16,105	22.80	84.44	158	18,787
4702+00	100	0	0	0	7,902	30.00	111.11	208	9,088	22.80	84.44	158	16,263	22.80	84.44	158	18,945
4703+00	100	0	0	0	7,902	30.00	111.11	208	9,296	22.80	84.44	158	16,421	22.20	83.33	156	19,101
4704+00	100	0	0	0	7,902	30.00	111.11	208	9,504	22.80	84.44	158	16,579	22.20	82.22	154	19,255
4705+00	100	0	0	0	7,902	30.00	111.11	208	9,712	22.80	84.44	158	16,737	22.20	82.22	154	19,409
4706+00	100	0	0	0	7,902	30.00	111.11	208	9,920	22.80	84.44	158	16,895	22.20	82.22	154	19,563
4707+00	100	0	0	0	7,902	30.00	111.11	208	10,128	22.80	84.44	158	17,053	22.20	82.22	154	19,717
4708+00	100	0	0	0	7,902	30.00	111.11	208	10,336	22.80	84.44	158	17,211	22.20	82.22	154	19,871
4709+00	100	0	0	0	7,902	30.00	111.11	208	10,544	22.80	84.44	158	17,369	22.10	82.04	154	20,025
4710+00	100	0	0	0	7,902	30.00	111.11	208	10,752	22.80	84.44	158	17,527	22.10	81.85	153	20,178
4711+00	100	0	0	0	7,902	30.00	111.11	208	10,960	22.80	84.44	158	17,685	22.10	81.85	153	20,331
4712+00	100	0	0	0	7,902	30.00	111.11	208	11,168	22.80	84.44	158	17,843	22.10	81.85	153	20,484
4713+00	100	0	0	0	7,902	30.00	111.11	208	11,376	22.80	84.44	158	18,001	22.10	81.85	153	20,637
4714+00	100	0	0	0	7,902	30.00	111.11	208	11,584	22.80	84.44	158	18,159	22.10	81.85	153	20,790
4714+17	17	0	0	0	7,902	30.00	18.89	35	11,619	22.80	14.36	27	18,186	22.10	13.91	26	20,816
4714+75	58	0	0	0	7,902	30.00	64.44	121	11,740	22.80	48.98	92	18,278	22.80	48.23	90	20,906
4715+00	25	0	0	0	7,902	30.00	27.78	52	11,792	22.80	21.11	40	18,318	22.80	21.11	40	20,946
4716+00	100	0	0	0	7,902	30.00	111.11	208	12,000	22.80	84.44	158	18,476	22.80	84.44	158	21,104
4717+00	100	0	0	0	7,902	30.00	111.11	208	12,208	22.80	84.44	158	18,634	22.80	84.44	158	21,262
4718+00	100	0	0	0	7,902	30.00	111.11	208	12,416	22.80	84.44	158	18,792	22.80	84.44	158	21,420
4718+38	38	0	0	0	7,902	30.00	42.22	79	12,495	22.80	32.09	60	18,852	22.80	32.09	60	21,480
4719+00	62	0	0	0	7,902	30.00	68.89	129	12,624	22.80	52.36	98	18,950	22.80	52.36	98	21,578
4720+00	100	0	0	0	7,902	30.00	111.11	208	12,832	22.80	84.44	158	19,108	22.80	84.44	158	21,736
4721+00	100	0	0	0	7,902	30.00	111.11	208	13,040	22.80	84.44	158	19,266	22.80	84.44	158	21,894
4722+00	100	0	0	0	7,902	30.00	111.11	208	13,248	22.80	84.44	158	19,424	98.90	225.37	423	22,317
4723+00	100	0	0	0	7,902	30.00	111.11	208	13,456	22.80	84.44	158	19,582	22.80	225.37	423	22,740
4724+00	100	0	0	0	7,902	30.00	111.11	208	13,664	22.80	84.44	158	19,740	22.80	84.44	158	22,898
4725+00	100	0	0	0	7,902	30.00	111.11	208	13,872	22.80	84.44	158	19,898	22.80	84.44	158	23,056
4726+00	100	0	0	0	7,902	30.00	111.11	208	14,080	22.80	84.44	158	20,056	22.80	84.44	158	23,214
4727+00	100	0	0	0	7,902	30.00	111.11	208	14,288	22.80	84.44	158	20,214	22.80	84.44	158	23,372
4728+00	100	0	0	0	7,902	30.00	111.11	208	14,496	22.80	84.44	158	20,372	22.20	83.33	156	23,528
4729+00	100	0	0	0	7,902	30.00	111.11	208	14,704	22.80	84.44	158	20,530	22.80	83.33	156	23,684
4730+00	100	0	0	0	7,902	30.00	111.11	208	14,912	22.80	84.44	158	20,688	22.20	83.33	156	23,840
4731+00	100	0	0	0	7,902	30.00	111.11	208	15,120	22.80	84.44	158	20,846	32.00	100.37	188	24,028
4732+00	100	0	0	0	7,902	30.00	111.11	208	15,328	22.80	84.44	158	21,004	22.20	100.37	188	24,216
4733+00	100	0	0	0	7,902	30.00	111.11	208	15,536	22.80	84.44	158	21,162	22.80	83.33	156	24,372

*CL 3M aggregate based on an approximate 30 Ft width and 12 In depth.
**End Areas and quantities determined from cross section end areas.

This document was originally issued and sealed by Jeffrey T. Lansink Registration Number PE-5244,On 11/3/2015 and the original document is stored at the North Dakota Department of Transportation

Data Tables
Aggregate Calculations

ND 23 - ND 28 to County Rd 13

STATE	PROJECT NO.	SECTION NO.	SHEET NO.
ND	SOIB-SOI-4-023(019)087	11	5

Aggregate Calculations Table

		Aggregate CL 3M								Salvaged Base Course							
		Mine & Blend**				Reconstruct*				Widen Left**				Widen Right**			
Station	Distance (Ft)	End Area (SF)	Volume (CY)	Ton (1.875 Ton/CY)	Accumulated Ton	End Area (SF)	Volume (CY)	Ton (1.875 Ton/CY)	Accumulated Ton	End Area (SF)	Volume (CY)	Ton (1.875 Ton/CY)	Accumulated Ton	End Area (SF)	Volume (CY)	Ton (1.875 Ton/CY)	Accumulated Ton
4734+00	100	5.2	9.63	18	7,920	0.00	55.56	104	15,640	22.20	83.33	156	21,318	22.80	84.44	158	24,530
4735+00	100	14.4	36.3	68	7,988	0.00	0	0	15,640	22.80	83.33	156	21,474	22.80	84.44	158	24,688
4736+00	100	15.9	56.11	105	8,093	0.00	0	0	15,640	22.80	84.44	158	21,632	22.80	84.44	158	24,846
4737+00	100	10.8	49.44	93	8,186	0.00	0	0	15,640	22.80	84.44	158	21,790	22.80	84.44	158	25,004
4737+77	77	7.6	26.24	49	8,235	0.00	0	0	15,640	22.80	65.02	122	21,912	22.80	65.02	122	25,126
4738+00	23	6.2	5.88	11	8,246	0.00	0	0	15,640	22.80	19.42	36	21,948	22.80	19.42	36	25,162
4739+00	100	16.9	42.78	80	8,326	0.00	0	0	15,640	22.80	84.44	158	22,106	22.80	84.44	158	25,320
4740+00	100	21.4	70.93	133	8,459	0.00	0	0	15,640	22.80	84.44	158	22,264	22.80	84.44	158	25,478
4741+00	100	0	39.63	74	8,533	30.00	55.56	104	15,744	22.80	84.44	158	22,422	22.80	84.44	158	25,636
4742+00	100	0	0	0	8,533	30.00	111.11	208	15,952	22.80	84.44	158	22,580	22.80	84.44	158	25,794
4743+00	100	0	0	0	8,533	30.00	111.11	208	16,160	22.80	84.44	158	22,738	22.80	84.44	158	25,952
4744+00	100	0	0	0	8,533	30.00	111.11	208	16,368	22.80	84.44	158	22,896	22.80	84.44	158	26,110
4744+17	17	0	0	0	8,533	30.00	18.89	35	16,403	22.80	14.36	27	22,923	22.80	14.36	27	26,137
4745+00	83	0	0	0	8,533	30.00	92.22	173	16,576	22.80	70.09	131	23,054	22.80	70.09	131	26,268
4746+00	100	0	0	0	8,533	30.00	111.11	208	16,784	22.80	84.44	158	23,212	22.80	84.44	158	26,426
4747+00	100	0	0	0	8,533	30.00	111.11	208	16,992	29.40	96.67	181	23,393	22.80	84.44	158	26,584
4747+40	40	0	0	0	8,533	30.00	44.44	83	17,075	22.80	38.67	73	23,466	22.80	33.78	63	26,647
4748+00	60	0	0	0	8,533	30.00	66.67	125	17,200	30.50	59.22	111	23,577	22.80	50.67	95	26,742
4749+00	100	0	0	0	8,533	30.00	111.11	208	17,408	29.70	111.48	209	23,786	29.80	97.41	183	26,925
4750+00	100	0	0	0	8,533	30.00	111.11	208	17,616	29.20	109.07	205	23,991	29.30	109.44	205	27,130
4751+00	100	0	0	0	8,533	30.00	111.11	208	17,824	30.20	110	206	24,197	30.40	110.56	207	27,337
4752+00	100	0	0	0	8,533	30.00	111.11	208	18,032	30.20	111.85	210	24,407	30.60	112.96	212	27,549
4753+00	100	0	0	0	8,533	30.00	111.11	208	18,240	22.80	98.15	184	24,591	22.80	98.89	185	27,734
4754+00	100	0	0	0	8,533	30.00	111.11	208	18,448	31.80	101.11	190	24,781	31.70	100.93	189	27,923
4755+00	100	0	0	0	8,533	30.00	111.11	208	18,656	22.80	101.11	190	24,971	22.80	100.93	189	28,112
4756+00	100	17.8	32.96	62	8,595	0.00	55.56	104	18,760	22.80	84.44	158	25,129	22.80	84.44	158	28,270
4757+00	100	21.2	72.22	135	8,730	0.00	0	0	18,760	22.80	84.44	158	25,287	22.80	84.44	158	28,428
4758+00	100	22.7	81.3	152	8,882	0.00	0	0	18,760	22.80	84.44	158	25,445	22.80	84.44	158	28,586
4759+00	100	26.1	90.37	169	9,051	0.00	0	0	18,760	22.80	84.44	158	25,603	22.80	84.44	158	28,744
4760+00	100	16.8	79.44	149	9,200	0.00	0	0	18,760	22.80	84.44	158	25,761	22.80	84.44	158	28,902
4761+00	100	19.4	67.04	126	9,326	0.00	0	0	18,760	22.80	84.44	158	25,919	22.80	84.44	158	29,060
4762+00	100	12.1	58.33	109	9,435	0.00	0	0	18,760	22.80	84.44	158	26,077	22.80	84.44	158	29,218
4763+00	100	16.5	52.96	99	9,534	0.00	0	0	18,760	31.90	101.3	190	26,267	22.80	84.44	158	29,376
4764+00	100	18.3	64.44	121	9,655	0.00	0	0	18,760	22.80	101.3	190	26,457	22.70	84.26	158	29,534
4765+00	100	23.2	76.85	144	9,799	0.00	0	0	18,760	22.80	84.44	158	26,615	22.70	84.07	158	29,692
4766+00	100	13.2	67.41	126	9,925	0.00	0	0	18,760	22.80	84.44	158	26,773	22.70	84.07	158	29,850
4767+00	100	16.8	55.56	104	10,029	0.00	0	0	18,760	22.80	84.44	158	26,931	22.70	84.07	158	30,008
4767+52	52	16.6	32.16	60	10,089	0.00	0	0	18,760	22.80	43.91	82	27,013	22.80	43.81	82	30,090
4768+00	48	17.8	30.58	57	10,146	0.00	0	0	18,760	31.70	48.44	91	27,104	22.80	40.53	76	30,166
4769+00	100	23.6	76.67	144	10,290	0.00	0	0	18,760	22.80	100.93	189	27,293	22.80	84.44	158	30,324
4770+00	100	29.1	97.59	183	10,473	0.00	0	0	18,760	22.80	84.44	158	27,451	22.80	84.44	158	30,482
4771+00	100	31.4	112.04	210	10,683	0.00	0	0	18,760	22.80	84.44	158	27,609	22.80	84.44	158	30,640
4772+00	100	21.7	98.33	184	10,867	0.00	0	0	18,760	22.80	84.44	158	27,767	22.80	84.44	158	30,798
4773+00	100	14.8	67.59	127	10,994	0.00	0	0	18,760	22.80	84.44	158	27,925	22.80	84.44	158	30,956
4774+00	100	18.5	61.67	116	11,110	0.00	0	0	18,760	22.80	84.44	158	28,083	22.80	84.44	158	31,114
4775+00	100	26.1	82.59	155	11,265	0.00	0	0	18,760	22.80	84.44	158	28,241	22.80	84.44	158	31,272
4776+00	100	30.5	104.81	197	11,462	0.00	0	0	18,760	22.80	84.44	158	28,399	22.80	84.44	158	31,430
4777+00	100	28.4	109.07	205	11,667	0.00	0	0	18,760	22.80	84.44	158	28,557	22.80	84.44	158	31,588
4778+00	100	24.1	97.22	182	11,849	0.00	0	0	18,760	22.80	84.44	158	28,715	22.80	84.44	158	31,746

*CL 3M aggregate based on an approximate 30 Ft width and 12 In depth.

**End Areas and quantities determined from cross section end areas.

This document was originally issued and sealed by Jeffrey T. Lansink Registration Number PE-5244,On 11/3/2015 and the original document is stored at the North Dakota Department of Transportation

Data Tables
Aggregate Calculations

ND 23 - ND 28 to County Rd 13

STATE	PROJECT NO.	SECTION NO.	SHEET NO.
ND	SOIB-SOI-4-023(019)087	11	6

Aggregate Calculations Table

		Aggregate CL 3M								Salvaged Base Course							
		Mine & Blend**				Reconstruct*				Widen Left**				Widen Right**			
Station	Distance (Ft)	End Area (SF)	Volume (CY)	Ton (1.875 Ton/CY)	Accumulated Ton	End Area (SF)	Volume (CY)	Ton (1.875 Ton/CY)	Accumulated Ton	End Area (SF)	Volume (CY)	Ton (1.875 Ton/CY)	Accumulated Ton	End Area (SF)	Volume (CY)	Ton (1.875 Ton/CY)	Accumulated Ton
4779+00	100	33.8	107.22	201	12,050	0.00	0	0	18,760	22.80	84.44	158	28,873	22.80	84.44	158	31,904
4780+00	100	25.1	109.07	205	12,255	0.00	0	0	18,760	22.80	84.44	158	29,031	22.80	84.44	158	32,062
4781+00	100	19.9	83.33	156	12,411	0.00	0	0	18,760	31.70	100.93	189	29,220	22.80	84.44	158	32,220
4782+00	100	16.6	67.59	127	12,538	0.00	0	0	18,760	31.60	117.22	220	29,440	22.80	84.44	158	32,378
4783+00	100	14.5	57.59	108	12,646	0.00	0	0	18,760	31.80	117.41	220	29,660	22.80	84.44	158	32,536
4784+00	100	18.5	61.11	115	12,761	0.00	0	0	18,760	31.80	117.78	221	29,881	22.80	84.44	158	32,694
4785+00	100	23.8	78.33	147	12,908	0.00	0	0	18,760	23.30	102.04	191	30,072	22.80	84.44	158	32,852
4786+00	100	25.9	92.04	173	13,081	0.00	0	0	18,760	23.60	86.85	163	30,235	22.80	84.44	158	33,010
4787+00	100	39.6	121.3	227	13,308	0.00	0	0	18,760	24.00	88.15	165	30,400	22.80	84.44	158	33,168
4787+68	68	42.5	103.39	194	13,502	0.00	0	0	18,760	24.70	61.33	115	30,515	22.80	57.42	108	33,276
4788+00	32	40.9	49.42	93	13,595	0.00	0	0	18,760	25.40	29.69	56	30,571	22.80	27.02	51	33,327
4789+00	100	27.1	125.93	236	13,831	0.00	0	0	18,760	27.70	98.33	184	30,755	22.80	84.44	158	33,485
4790+00	100	16.4	80.56	151	13,982	0.00	0	0	18,760	27.70	102.59	192	30,947	22.80	84.44	158	33,643
4791+00	100	20.7	68.7	129	14,111	0.00	0	0	18,760	27.70	102.59	192	31,139	22.80	84.44	158	33,801
4791+15	15	20.6	11.47	22	14,133	0.00	0	0	18,760	27.70	15.39	29	31,168	22.80	12.67	24	33,825
4792+00	85	32.8	84.06	158	14,291	0.00	0	0	18,760	27.70	87.2	164	31,332	22.80	71.78	135	33,960
4793+00	100	23.6	104.44	196	14,487	0.00	0	0	18,760	27.70	102.59	192	31,524	22.80	84.44	158	34,118
4794+00	100	15.9	73.15	137	14,624	0.00	0	0	18,760	27.70	102.59	192	31,716	32.00	101.48	190	34,308
4795+00	100	19.4	65.37	123	14,747	0.00	0	0	18,760	27.70	102.59	192	31,908	31.90	118.33	222	34,530
4796+00	100	16.6	66.67	125	14,872	0.00	0	0	18,760	27.70	102.59	192	32,100	31.90	118.15	222	34,752
4797+00	100	0	30.74	58	14,930	30.00	55.56	104	18,864	27.70	102.59	192	32,292	22.20	100.19	188	34,940
4798+00	100	0	0	0	14,930	30.00	111.11	208	19,072	27.70	102.59	192	32,484	22.80	83.33	156	35,096
4799+00	100	0	0	0	14,930	30.00	111.11	208	19,280	27.70	102.59	192	32,676	22.80	84.44	158	35,254
4800+00	100	0	0	0	14,930	30.00	111.11	208	19,488	27.70	102.59	192	32,868	22.80	84.44	158	35,412
4801+00	100	0	0	0	14,930	30.00	111.11	208	19,696	27.70	102.59	192	33,060	22.80	84.44	158	35,570
4802+00	100	0	0	0	14,930	30.00	111.11	208	19,904	27.70	102.59	192	33,252	22.80	84.44	158	35,728
4803+00	100	0	0	0	14,930	30.00	111.11	208	20,112	27.80	102.78	193	33,445	99.90	227.22	426	36,154
4804+00	100	0	0	0	14,930	30.00	111.11	208	20,320	27.70	102.78	193	33,638	22.80	227.22	426	36,580
4805+00	100	0	0	0	14,930	30.00	111.11	208	20,528	27.70	102.59	192	33,830	22.80	84.44	158	36,738
4806+00	100	0	0	0	14,930	30.00	111.11	208	20,736	27.70	102.59	192	34,022	22.80	84.44	158	36,896
4806+38	38	0	0	0	14,930	30.00	42.22	79	20,815	27.70	38.99	73	34,095	22.80	32.09	60	36,956
4807+00	62	0	0	0	14,930	30.00	68.89	129	20,944	27.70	63.61	119	34,214	22.80	52.36	98	37,054
4808+00	100	0	0	0	14,930	30.00	111.11	208	21,152	27.70	102.59	192	34,406	22.80	84.44	158	37,212
4809+00	100	0	0	0	14,930	30.00	111.11	208	21,360	27.70	102.59	192	34,598	22.80	84.44	158	37,370
4810+00	100	0	0	0	14,930	30.00	111.11	208	21,568	27.70	102.59	192	34,790	22.80	84.44	158	37,528
4811+00	100	0	0	0	14,930	30.00	111.11	208	21,776	27.70	102.59	192	34,982	22.80	84.44	158	37,686
4812+00	100	0	0	0	14,930	30.00	111.11	208	21,984	27.70	102.59	192	35,174	22.80	84.44	158	37,844
4813+00	100	0	0	0	14,930	30.00	111.11	208	22,192	27.70	102.59	192	35,366	22.80	84.44	158	38,002
4814+00	100	0	0	0	14,930	30.00	111.11	208	22,400	27.70	102.59	192	35,558	22.80	84.44	158	38,160
4815+00	100	0	0	0	14,930	30.00	111.11	208	22,608	27.70	102.59	192	35,750	22.80	84.44	158	38,318
4816+00	100	0	0	0	14,930	30.00	111.11	208	22,816	27.70	102.59	192	35,942	22.80	84.44	158	38,476
4817+00	100	0	0	0	14,930	30.00	111.11	208	23,024	27.70	102.59	192	36,134	22.10	83.15	156	38,632
4817+58	58	0	0	0	14,930	30.00	64.44	121	23,145	27.70	59.5	112	36,246	22.80	48.23	90	38,722
4818+00	42	16.9	13.14	25	14,955	0.00	23.33	44	23,189	27.70	43.09	81	36,327	22.80	35.47	67	38,789
4819+00	100	25.6	78.7	148	15,103	0.00	0	0	23,189	27.70	102.59	192	36,519	22.80	84.44	158	38,947
4820+00	100	20.9	86.11	161	15,264	0.00	0	0	23,189	27.70	102.59	192	36,711	22.80	84.44	158	39,105
4820+15	15	21.9	11.89	22	15,286	0.00	0	0	23,189	27.70	15.39	29	36,740	22.80	12.67	24	39,129
4821+00	85	22	69.1	130	15,416	0.00	0	0	23,189	27.70	87.2	164	36,904	22.80	71.78	135	39,264
4822+00	100	24.1	85.37	160	15,576	0.00	0	0	23,189	27.70	102.59	192	37,096	22.80	84.44	158	39,422

*CL 3M aggregate based on an approximate 30 Ft width and 12 In depth.

**End Areas and quantities determined from cross section end areas.

This document was originally issued and sealed by Jeffrey T. Lansink Registration Number PE-5244,On 11/3/2015 and the original document is stored at the North Dakota Department of Transportation

Data Tables
Aggregate Calculations

ND 23 - ND 28 to County Rd 13

STATE	PROJECT NO.	SECTION NO.	SHEET NO.
ND	SOIB-SOI-4-023(019)087	11	7

Aggregate Calculations Table

		Aggregate CL 3M								Salvaged Base Course							
		Mine & Blend**				Reconstruct*				Widen Left**				Widen Right**			
Station	Distance (Ft)	End Area (SF)	Volume (CY)	Ton (1.875 Ton/CY)	Accumulated Ton	End Area (SF)	Volume (CY)	Ton (1.875 Ton/CY)	Accumulated Ton	End Area (SF)	Volume (CY)	Ton (1.875 Ton/CY)	Accumulated Ton	End Area (SF)	Volume (CY)	Ton (1.875 Ton/CY)	Accumulated Ton
4823+00	100	24.2	89.44	168	15,744	0.00	0	0	23,189	27.70	102.59	192	37,288	22.80	84.44	158	39,580
4824+00	100	14.7	72.04	135	15,879	0.00	0	0	23,189	27.70	102.59	192	37,480	22.80	84.44	158	39,738
4825+00	100	22.4	68.7	129	16,008	0.00	0	0	23,189	27.70	102.59	192	37,672	22.80	84.44	158	39,896
4826+00	100	24.7	87.22	164	16,172	0.00	0	0	23,189	27.70	102.59	192	37,864	22.80	84.44	158	40,054
4827+00	100	21.7	85.93	161	16,333	0.00	0	0	23,189	27.70	102.59	192	38,056	22.80	84.44	158	40,212
4828+00	100	16.4	70.56	132	16,465	0.00	0	0	23,189	27.70	102.59	192	38,248	22.80	84.44	158	40,370
4829+00	100	15.9	59.81	112	16,577	0.00	0	0	23,189	27.70	102.59	192	38,440	22.80	84.44	158	40,528
4830+00	100	9.4	46.85	88	16,665	0.00	0	0	23,189	27.70	102.59	192	38,632	22.80	84.44	158	40,686
4830+79	79	16	37.16	70	16,735	0.00	0	0	23,189	27.70	81.05	152	38,784	22.80	66.71	125	40,811
4831+00	21	14.2	11.74	22	16,757	0.00	0	0	23,189	27.70	21.54	40	38,824	28.80	20.07	38	40,849
4832+00	100	24.1	70.93	133	16,890	0.00	0	0	23,189	27.70	102.59	192	39,016	22.80	95.56	179	41,028
4833+00	100	18.8	79.44	149	17,039	0.00	0	0	23,189	27.70	102.59	192	39,208	22.80	84.44	158	41,186
4834+00	100	15.8	64.07	120	17,159	0.00	0	0	23,189	27.70	102.59	192	39,400	22.80	84.44	158	41,344
4835+00	100	14	55.19	103	17,262	0.00	0	0	23,189	27.70	102.59	192	39,592	22.80	84.44	158	41,502
4836+00	100	26.7	75.37	141	17,403	0.00	0	0	23,189	27.70	102.59	192	39,784	22.80	84.44	158	41,660
4837+00	100	19.2	85	159	17,562	0.00	0	0	23,189	27.70	102.59	192	39,976	22.80	84.44	158	41,818
4838+00	100	13	59.63	112	17,674	0.00	0	0	23,189	27.70	102.59	192	40,168	22.80	84.44	158	41,976
4839+00	100	13.4	48.89	92	17,766	0.00	0	0	23,189	25.40	98.33	184	40,352	22.80	84.44	158	42,134
4840+00	100	10.2	43.7	82	17,848	0.00	0	0	23,189	24.00	91.48	172	40,524	22.80	84.44	158	42,292
4841+00	100	10.6	38.52	72	17,920	0.00	0	0	23,189	23.60	88.15	165	40,689	22.80	84.44	158	42,450
4842+00	100	13.4	44.44	83	18,003	0.00	0	0	23,189	23.30	86.85	163	40,852	22.80	84.44	158	42,608
4843+00	100	19.1	60.19	113	18,116	0.00	0	0	23,189	22.90	85.56	160	41,012	22.80	84.44	158	42,766
4843+56	56	22.4	43.04	81	18,197	0.00	0	0	23,189	22.80	47.39	89	41,101	22.80	47.29	89	42,855
4843+95	39	16.6	28.17	53	18,250	0.00	0	0	23,189	22.80	32.93	62	41,163	22.80	32.93	62	42,917
4844+00	5	16.9	3.1	6	18,256	0.00	0	0	23,189	22.80	4.22	8	41,171	22.80	4.22	8	42,925
4845+00	100	10.8	51.3	96	18,352	0.00	0	0	23,189	22.80	84.44	158	41,329	22.80	84.44	158	43,083
4846+00	100	0	20	38	18,390	30.00	55.56	104	23,293	22.80	84.44	158	41,487	22.20	83.33	156	43,239
4846+75	75	0	0	0	18,390	30.00	83.33	156	23,449	22.80	63.33	119	41,606	22.80	62.5	117	43,356
4847+00	25	0	0	0	18,390	30.00	27.78	52	23,501	22.80	21.11	40	41,646	22.20	20.83	39	43,395
4848+00	100	0	0	0	18,390	30.00	111.11	208	23,709	22.80	84.44	158	41,804	22.80	83.33	156	43,551
4849+00	100	0	0	0	18,390	30.00	111.11	208	23,917	22.80	84.44	158	41,962	22.80	84.44	158	43,709
4850+00	100	0	0	0	18,390	30.00	111.11	208	24,125	22.80	84.44	158	42,120	22.80	84.44	158	43,867
4851+00	100	0	0	0	18,390	30.00	111.11	208	24,333	22.80	84.44	158	42,278	22.80	84.44	158	44,025
4852+00	100	0	0	0	18,390	30.00	111.11	208	24,541	22.80	84.44	158	42,436	22.80	84.44	158	44,183
4853+00	100	0	0	0	18,390	30.00	111.11	208	24,749	22.80	84.44	158	42,594	22.80	84.44	158	44,341
4853+38	38	0	0	0	18,390	30.00	42.22	79	24,828	22.80	32.09	60	42,654	22.80	32.09	60	44,401
4854+00	62	0	0	0	18,390	30.00	68.89	129	24,957	22.80	52.36	98	42,752	22.80	52.36	98	44,499
4855+00	100	0	0	0	18,390	30.00	111.11	208	25,165	22.80	84.44	158	42,910	22.80	84.44	158	44,657
4856+00	100	0	0	0	18,390	30.00	111.11	208	25,373	22.80	84.44	158	43,068	22.80	84.44	158	44,815
4857+00	100	0	0	0	18,390	30.00	111.11	208	25,581	22.80	84.44	158	43,226	22.80	84.44	158	44,973
4858+00	100	0	0	0	18,390	30.00	111.11	208	25,789	22.80	84.44	158	43,384	22.80	84.44	158	45,131
4859+00	100	0	0	0	18,390	30.00	111.11	208	25,997	22.80	84.44	158	43,542	22.80	84.44	158	45,289
4860+00	100	0	0	0	18,390	30.00	111.11	208	26,205	108.00	242.22	454	43,996	123.50	270.93	508	45,797
4861+00	100	0	0	0	18,390	30.00	111.11	208	26,413	22.80	242.22	454	44,450	22.80	270.93	508	46,305
4861+12	12	0	0	0	18,390	30.00	13.33	25	26,438	22.80	10.13	19	44,469	22.80	10.13	19	46,324
4862+00	88	0	0	0	18,390	30.00	97.78	183	26,621	22.80	74.31	139	44,608	22.80	74.31	139	46,463
4863+00	100	0	0	0	18,390	30.00	111.11	208	26,829	22.10	83.15	156	44,764	22.90	84.63	159	46,622
4864+00	100	0	0	0	18,390	30.00	111.11	208	27,037	22.10	81.85	153	44,917	23.30	85.56	160	46,782
4865+00	100	0	0	0	18,390	30.00	111.11	208	27,245	22.10	81.85	153	45,070	23.60	86.85	163	46,945

*CL 3M aggregate based on an approximate 30 Ft width and 12 In depth.

**End Areas and quantities determined from cross section end areas.

This document was originally issued and sealed by Jeffrey T. Lansink Registration Number PE-5244,On 11/3/2015 and the original document is stored at the North Dakota Department of Transportation

Data Tables
Aggregate Calculations

ND 23 - ND 28 to County Rd 13

STATE	PROJECT NO.	SECTION NO.	SHEET NO.
ND	SOIB-SOI-4-023(019)087	11	8

Aggregate Calculations Table

		Aggregate CL 3M								Salvaged Base Course							
		Mine & Blend**				Reconstruct*				Widen Left**				Widen Right**			
Station	Distance (Ft)	End Area (SF)	Volume (CY)	Ton (1.875 Ton/CY)	Accumulated Ton	End Area (SF)	Volume (CY)	Ton (1.875 Ton/CY)	Accumulated Ton	End Area (SF)	Volume (CY)	Ton (1.875 Ton/CY)	Accumulated Ton	End Area (SF)	Volume (CY)	Ton (1.875 Ton/CY)	Accumulated Ton
4866+00	100	0	0	0	18,390	30.00	111.11	208	27,453	22.80	83.15	156	45,226	24.00	88.15	165	47,110
4867+00	100	0	0	0	18,390	30.00	111.11	208	27,661	22.80	84.44	158	45,384	25.40	91.48	172	47,282
4868+00	100	0	0	0	18,390	30.00	111.11	208	27,869	22.80	84.44	158	45,542	27.70	98.33	184	47,466
4869+00	100	7.7	14.26	27	18,417	0.00	55.56	104	27,973	22.80	84.44	158	45,700	27.70	102.59	192	47,658
4870+00	100	10.8	34.26	64	18,481	0.00	0	0	27,973	22.80	84.44	158	45,858	27.70	102.59	192	47,850
4870+42	42	8.8	15.24	29	18,510	0.00	0	0	27,973	22.80	35.47	67	45,925	27.70	43.09	81	47,931
4871+00	58	7.3	17.29	32	18,542	0.00	0	0	27,973	30.70	57.46	108	46,033	27.70	59.5	112	48,043
4872+00	100	12.2	36.11	68	18,610	0.00	0	0	27,973	22.80	99.07	186	46,219	76.10	192.22	360	48,403
4873+00	100	8	37.41	70	18,680	0.00	0	0	27,973	22.80	84.44	158	46,377	27.70	192.22	360	48,763
4874+00	100	10.2	33.7	63	18,743	0.00	0	0	27,973	22.80	84.44	158	46,535	27.70	102.59	192	48,955
4875+00	100	8.5	34.63	65	18,808	0.00	0	0	27,973	22.80	84.44	158	46,693	27.70	102.59	192	49,147
4875+15	15	11.1	5.44	10	18,818	0.00	0	0	27,973	22.80	12.67	24	46,717	27.70	15.39	29	49,176
4876+00	85	14.9	40.93	77	18,895	0.00	0	0	27,973	22.80	71.78	135	46,852	27.70	87.2	164	49,340
4877+00	100	12.4	50.56	95	18,990	0.00	0	0	27,973	22.80	84.44	158	47,010	27.70	102.59	192	49,532
4878+00	100	23.9	67.22	126	19,116	0.00	0	0	27,973	22.80	84.44	158	47,168	27.70	102.59	192	49,724
4879+00	100	26	92.41	173	19,289	0.00	0	0	27,973	22.80	84.44	158	47,326	27.70	102.59	192	49,916
4880+00	100	23.4	91.48	172	19,461	0.00	0	0	27,973	22.80	84.44	158	47,484	27.70	102.59	192	50,108
4881+00	100	20.9	82.04	154	19,615	0.00	0	0	27,973	22.80	84.44	158	47,642	27.70	102.59	192	50,300
4882+00	100	15.5	67.41	126	19,741	0.00	0	0	27,973	22.80	84.44	158	47,800	27.70	102.59	192	50,492
4883+00	100	10.1	47.41	89	19,830	0.00	0	0	27,973	22.80	84.44	158	47,958	27.70	102.59	192	50,684
4884+00	100	14.4	45.37	85	19,915	0.00	0	0	27,973	22.80	84.44	158	48,116	27.70	102.59	192	50,876
4885+00	100	17	58.15	109	20,024	0.00	0	0	27,973	22.80	84.44	158	48,274	27.70	102.59	192	51,068
4886+00	100	20.7	69.81	131	20,155	0.00	0	0	27,973	22.80	84.44	158	48,432	27.70	102.59	192	51,260
4887+00	100	23.3	81.48	153	20,308	0.00	0	0	27,973	22.80	84.44	158	48,590	27.70	102.59	192	51,452
4888+00	100	17.5	75.56	142	20,450	0.00	0	0	27,973	22.80	84.44	158	48,748	27.70	102.59	192	51,644
4888+34	34	18.1	22.41	42	20,492	0.00	0	0	27,973	22.80	28.71	54	48,802	27.70	34.88	65	51,709
4889+00	66	15.2	40.7	76	20,568	0.00	0	0	27,973	22.80	55.73	104	48,906	27.70	67.71	127	51,836
4890+00	100	11.1	48.7	91	20,659	0.00	0	0	27,973	22.80	84.44	158	49,064	27.70	102.59	192	52,028
4891+00	100	11.2	41.3	77	20,736	0.00	0	0	27,973	22.80	84.44	158	49,222	27.70	102.59	192	52,220
4892+00	100	10.9	40.93	77	20,813	0.00	0	0	27,973	22.80	84.44	158	49,380	27.70	102.59	192	52,412
4893+00	100	9	36.85	69	20,882	0.00	0	0	27,973	22.80	84.44	158	49,538	27.70	102.59	192	52,604
4894+00	100	7	29.63	56	20,938	0.00	0	0	27,973	22.80	84.44	158	49,696	27.70	102.59	192	52,796
4895+00	100	4.6	21.48	40	20,978	0.00	0	0	27,973	22.80	84.44	158	49,854	27.70	102.59	192	52,988
4896+00	100	8.7	24.63	46	21,024	0.00	0	0	27,973	22.80	84.44	158	50,012	27.70	102.59	192	53,180
4897+00	100	16.5	46.67	88	21,112	0.00	0	0	27,973	22.80	84.44	158	50,170	27.70	102.59	192	53,372
4898+00	100	12.4	53.52	100	21,212	0.00	0	0	27,973	22.80	84.44	158	50,328	27.70	102.59	192	53,564
4899+00	100	10.2	41.85	78	21,290	0.00	0	0	27,973	22.80	84.44	158	50,486	27.70	102.59	192	53,756
4900+00	100	19.3	54.63	102	21,392	0.00	0	0	27,973	22.80	84.44	158	50,644	27.70	102.59	192	53,948
4901+00	100	16.5	66.3	124	21,516	0.00	0	0	27,973	22.80	84.44	158	50,802	27.70	102.59	192	54,140
4902+00	100	10.6	50.19	94	21,610	0.00	0	0	27,973	22.80	84.44	158	50,960	27.70	102.59	192	54,332
4903+00	100	5.5	29.81	56	21,666	0.00	0	0	27,973	22.80	84.44	158	51,118	27.70	102.59	192	54,524
4903+15	15	5.4	3.03	6	21,672	0.00	0	0	27,973	22.80	12.67	24	51,142	27.70	15.39	29	54,553
4904+00	85	10.5	25.03	47	21,719	0.00	0	0	27,973	22.80	71.78	135	51,277	27.70	87.2	164	54,717
4905+00	100	11.4	40.56	76	21,795	0.00	0	0	27,973	31.80	101.11	190	51,467	27.70	102.59	192	54,909
4906+00	100	11.2	41.85	78	21,873	0.00	0	0	27,973	22.80	101.11	190	51,657	27.70	102.59	192	55,101
4907+00	100	8.6	36.67	69	21,942	0.00	0	0	27,973	31.50	100.56	189	51,846	74.20	188.7	354	55,455
4908+00	100	11.9	37.96	71	22,013	0.00	0	0	27,973	22.80	100.56	189	52,035	27.70	188.7	354	55,809
4909+00	100	15	49.81	93	22,106	0.00	0	0	27,973	22.80	84.44	158	52,193	27.70	102.59	192	56,001
4910+00	100	15.7	56.85	107	22,213	0.00	0	0	27,973	22.80	84.44	158	52,351	27.70	102.59	192	56,193

*CL 3M aggregate based on an approximate 30 Ft width and 12 In depth.

**End Areas and quantities determined from cross section end areas.

This document was originally issued and sealed by Jeffrey T. Lansink Registration Number PE-5244,On 11/3/2015 and the original document is stored at the North Dakota Department of Transportation

Data Tables
Aggregate Calculations

ND 23 - ND 28 to County Rd 13

Aggregate Calculations Table

		Aggregate CL 3M								Salvaged Base Course							
		Mine & Blend**				Reconstruct*				Widen Left**				Widen Right**			
Station	Distance (Ft)	End Area (SF)	Volume (CY)	Ton (1.875 Ton/CY)	Accumulated Ton	End Area (SF)	Volume (CY)	Ton (1.875 Ton/CY)	Accumulated Ton	End Area (SF)	Volume (CY)	Ton (1.875 Ton/CY)	Accumulated Ton	End Area (SF)	Volume (CY)	Ton (1.875 Ton/CY)	Accumulated Ton
4911+00	100	16.8	60.19	113	22,326	0.00	0	0	27,973	22.80	84.44	158	52,509	27.70	102.59	192	56,385
4912+00	100	9.9	49.44	93	22,419	0.00	0	0	27,973	22.80	84.44	158	52,667	82.20	203.52	382	56,767
4913+00	100	16.1	48.15	90	22,509	0.00	0	0	27,973	22.80	84.44	158	52,825	27.70	203.52	382	57,149
4914+00	100	31.8	88.7	166	22,675	0.00	0	0	27,973	22.80	84.44	158	52,983	27.70	102.59	192	57,341
4915+00	100	37.1	127.59	239	22,914	0.00	0	0	27,973	22.80	84.44	158	53,141	27.70	102.59	192	57,533
4915+86	86	38.2	119.92	225	23,139	0.00	0	0	27,973	22.80	72.62	136	53,277	27.70	88.23	165	57,698
4916+00	14	35.7	19.16	36	23,175	0.00	0	0	27,973	22.80	11.82	22	53,299	27.70	14.36	27	57,725
4917+00	100	17.2	97.96	184	23,359	0.00	0	0	27,973	22.80	84.44	158	53,457	27.70	102.59	192	57,917
4918+00	100	10.7	51.67	97	23,456	0.00	0	0	27,973	22.80	84.44	158	53,615	27.70	102.59	192	58,109
4919+00	100	10	38.33	72	23,528	0.00	0	0	27,973	22.80	84.44	158	53,773	71.20	183.15	343	58,452
4920+00	100	16.6	49.26	92	23,620	0.00	0	0	27,973	22.80	84.44	158	53,931	27.70	183.15	343	58,795
4921+00	100	14.7	57.96	109	23,729	0.00	0	0	27,973	22.80	84.44	158	54,089	27.70	102.59	192	58,987
4922+00	100	9.6	45	84	23,813	0.00	0	0	27,973	22.80	84.44	158	54,247	27.70	102.59	192	59,179
4923+00	100	14.8	45.19	85	23,898	0.00	0	0	27,973	22.80	84.44	158	54,405	27.70	102.59	192	59,371
4923+27	27	9.3	12.05	23	23,921	0.00	0	0	27,973	22.80	22.8	43	54,448	27.70	27.7	52	59,423
4924+00	73	17.4	36.09	68	23,989	0.00	0	0	27,973	22.80	61.64	116	54,564	27.70	74.89	140	59,563
4925+00	100	12.8	55.93	105	24,094	0.00	0	0	27,973	22.80	84.44	158	54,722	27.70	102.59	192	59,755
4926+00	100	9.5	41.3	77	24,171	0.00	0	0	27,973	22.80	84.44	158	54,880	27.70	102.59	192	59,947
4927+00	100	7	30.56	57	24,228	0.00	0	0	27,973	22.80	84.44	158	55,038	25.40	98.33	184	60,131
4928+00	100	10.1	31.67	59	24,287	0.00	0	0	27,973	22.80	84.44	158	55,196	24.00	91.48	172	60,303
4928+16	16	7.9	5.33	10	24,297	0.00	0	0	27,973	22.80	13.51	25	55,221	24.00	14.22	27	60,330
4929+00	84	7	23.18	43	24,340	0.00	0	0	27,973	22.80	70.93	133	55,354	23.60	74.04	139	60,469
4930+00	100	3	18.52	35	24,375	0.00	0	0	27,973	22.80	84.44	158	55,512	23.30	86.85	163	60,632
4931+00	100	8.5	21.3	40	24,415	0.00	0	0	27,973	22.80	84.44	158	55,670	22.90	85.56	160	60,792
4932+00	100	9.7	33.7	63	24,478	0.00	0	0	27,973	22.80	84.44	158	55,828	22.80	84.63	159	60,951
4933+00	100	12.6	41.3	77	24,555	0.00	0	0	27,973	22.80	84.44	158	55,986	22.80	84.44	158	61,109
4933+40	40	11.7	18	34	24,589	0.00	0	0	27,973	22.80	33.78	63	56,049	22.80	33.78	63	61,172
4934+00	60	15.3	30	56	24,645	0.00	0	0	27,973	22.80	50.67	95	56,144	22.80	50.67	95	61,267
4935+00	100	21.9	68.89	129	24,774	0.00	0	0	27,973	22.80	84.44	158	56,302	22.80	84.44	158	61,425
4936+00	100	22	81.3	152	24,926	0.00	0	0	27,973	22.80	84.44	158	56,460	22.80	84.44	158	61,583
4936+23	23	25.5	20.04	38	24,964	0.00	0	0	27,973	22.80	19.24	36	56,496	22.80	19.24	36	61,619
4936+93	70	29.7	71.73	134	25,098	0.00	0	0	27,973	22.80	59.25	111	56,607	22.80	59.25	111	61,730
4937+00	7	28.7	7.62	14	25,112	0.00	0	0	27,973	22.80	5.95	11	56,618	22.80	5.95	11	61,741
4937+63	63	23.4	60.9	114	25,226	0.00	0	0	27,973	22.80	53.3	100	56,718	22.80	53.3	100	61,841
4938+00	37	18.7	28.75	54	25,280	0.00	0	0	27,973	22.90	31.21	59	56,777	22.20	30.73	58	61,899
4938+30	30	16.6	19.58	37	25,317	0.00	0	0	27,973	23.30	25.62	48	56,825	21.90	24.46	46	61,945
4939+00	70	12.5	37.75	71	25,388	0.00	0	0	27,973	23.30	60.45	113	56,938	21.90	56.82	107	62,052
4940+00	100	10.9	43.33	81	25,469	0.00	0	0	27,973	23.30	86.3	162	57,100	21.90	81.11	152	62,204
4941+00	100	13.8	45.74	86	25,555	0.00	0	0	27,973	23.30	86.3	162	57,262	21.90	81.11	152	62,356
4942+00	100	11	45.93	86	25,641	0.00	0	0	27,973	23.30	86.3	162	57,424	21.90	81.11	152	62,508
4943+00	100	5.8	31.11	58	25,699	0.00	0	0	27,973	23.30	86.3	162	57,586	21.90	81.11	152	62,660
4944+00	100	12.6	34.07	64	25,763	0.00	0	0	27,973	23.30	86.3	162	57,748	21.90	81.11	152	62,812
4945+00	100	22.3	64.63	121	25,884	0.00	0	0	27,973	23.30	86.3	162	57,910	21.90	81.11	152	62,964
4946+00	100	22.4	82.78	155	26,039	0.00	0	0	27,973	23.30	86.3	162	58,072	21.90	81.11	152	63,116
4947+00	100	22.3	82.78	155	26,194	0.00	0	0	27,973	23.30	86.3	162	58,234	21.90	81.11	152	63,268
4947+58	58	21.1	46.61	87	26,281	0.00	0	0	27,973	23.30	50.05	94	58,328	21.90	47.04	88	63,356
4948+00	42	24	35.08	66	26,347	0.00	0	0	27,973	23.30	36.24	68	58,396	21.90	34.07	64	63,420
4949+00	100	18.1	77.96	146	26,493	0.00	0	0	27,973	23.30	86.3	162	58,558	21.90	81.11	152	63,572
4949+81	81	16.4	51.75	97	26,590	0.00	0	0	27,973	23.30	69.9	131	58,689	21.90	65.7	123	63,695

*CL 3M aggregate based on an approximate 30 Ft width and 12 In depth.
**End Areas and quantities determined from cross section end areas.

This document was originally issued and sealed by Jeffrey T. Lansink Registration Number PE-5244,On 11/3/2015 and the original document is stored at the North Dakota Department of Transportation

Data Tables
Aggregate Calculations

ND 23 - ND 28 to County Rd 13

STATE	PROJECT NO.	SECTION NO.	SHEET NO.
ND	SOIB-SOI-4-023(019)087	11	10

Aggregate Calculations Table

		Aggregate CL 3M								Salvaged Base Course							
		Mine & Blend**				Reconstruct*				Widen Left**				Widen Right**			
Station	Distance (Ft)	End Area (SF)	Volume (CY)	Ton (1.875 Ton/CY)	Accumulated Ton	End Area (SF)	Volume (CY)	Ton (1.875 Ton/CY)	Accumulated Ton	End Area (SF)	Volume (CY)	Ton (1.875 Ton/CY)	Accumulated Ton	End Area (SF)	Volume (CY)	Ton (1.875 Ton/CY)	Accumulated Ton
4950+00	19	15.7	11.29	21	26,611	0.00	0	0	27,973	23.30	16.4	31	58,720	21.90	15.41	29	63,724
4951+00	100	17.7	61.85	116	26,727	0.00	0	0	27,973	23.30	86.3	162	58,882	21.90	81.11	152	63,876
4952+00	100	23.2	75.74	142	26,869	0.00	0	0	27,973	23.30	86.3	162	59,044	21.90	81.11	152	64,028
4953+00	100	18.8	77.78	146	27,015	0.00	0	0	27,973	23.30	86.3	162	59,206	21.90	81.11	152	64,180
4954+00	100	16.4	65.19	122	27,137	0.00	0	0	27,973	23.30	86.3	162	59,368	21.90	81.11	152	64,332
4955+00	100	15.7	59.44	111	27,248	0.00	0	0	27,973	23.30	86.3	162	59,530	21.90	81.11	152	64,484
4956+00	100	16.2	59.07	111	27,359	0.00	0	0	27,973	23.30	86.3	162	59,692	21.90	81.11	152	64,636
4957+00	100	20.7	68.33	128	27,487	0.00	0	0	27,973	23.30	86.3	162	59,854	21.90	81.11	152	64,788
4957+36	36	18	25.8	48	27,535	0.00	0	0	27,973	23.30	31.07	58	59,912	21.90	29.2	55	64,843
4958+00	64	16.2	40.53	76	27,611	0.00	0	0	27,973	23.30	55.23	104	60,016	21.90	51.91	97	64,940
4959+00	100	12.5	53.15	100	27,711	0.00	0	0	27,973	23.30	86.3	162	60,178	21.90	81.11	152	65,092
4960+00	100	21.4	62.78	118	27,829	0.00	0	0	27,973	23.30	86.3	162	60,340	21.90	81.11	152	65,244
4961+00	100	14.8	67.04	126	27,955	0.00	0	0	27,973	23.30	86.3	162	60,502	21.90	81.11	152	65,396
4962+00	100	10.8	47.41	89	28,044	0.00	0	0	27,973	23.30	86.3	162	60,664	21.90	81.11	152	65,548
4963+00	100	9.1	36.85	69	28,113	0.00	0	0	27,973	23.30	86.3	162	60,826	21.90	81.11	152	65,700
4964+00	100	8.7	32.96	62	28,175	0.00	0	0	27,973	32.40	103.15	193	61,019	21.90	81.11	152	65,852
4964+28	28	14.1	11.98	22	28,197	0.00	0	0	27,973	23.30	29.27	55	61,074	21.90	23.02	43	65,895
4964+95	67	15.7	36.88	69	28,266	0.00	0	0	27,973	22.80	57.05	107	61,181	22.80	55.32	104	65,999
4965+00	5	15.3	2.75	5	28,271	0.00	0	0	27,973	22.80	4.04	8	61,189	22.80	4.04	8	66,007
4965+65	65	12.1	33.17	62	28,333	0.00	0	0	27,973	22.80	55.21	104	61,293	22.80	55.21	104	66,111
4966+00	35	11.8	15.32	29	28,362	0.00	0	0	27,973	22.80	29.23	55	61,348	22.80	29.23	55	66,166
4966+36	36	12.6	16.06	30	28,392	0.00	0	0	27,973	22.80	30.02	56	61,404	22.80	30.02	56	66,222
4967+00	64	12.8	30.32	57	28,449	0.00	0	0	27,973	22.80	54.42	102	61,506	22.80	54.42	102	66,324
4968+00	100	20.3	61.3	115	28,564	0.00	0	0	27,973	22.80	84.44	158	61,664	22.80	84.44	158	66,482
4968+66	66	29.1	60.38	113	28,677	0.00	0	0	27,973	22.80	55.73	104	61,768	22.80	55.73	104	66,586
4969+00	34	26.8	35.2	66	28,743	0.00	0	0	27,973	22.80	28.71	54	61,822	22.80	28.71	54	66,640
4970+00	100	17.3	81.67	153	28,896	0.00	0	0	27,973	22.80	84.44	158	61,980	22.80	84.44	158	66,798
4971+00	100	13.6	57.22	107	29,003	0.00	0	0	27,973	22.80	84.44	158	62,138	28.80	95.56	179	66,977
4971+16	16	12.7	7.79	15	29,018	0.00	0	0	27,973	22.80	13.51	25	62,163	22.80	15.29	29	67,006
4972+00	84	16.2	44.96	84	29,102	0.00	0	0	27,973	22.80	70.93	133	62,296	22.80	70.93	133	67,139
4973+00	100	21.6	70	131	29,233	0.00	0	0	27,973	22.80	84.44	158	62,454	22.80	84.44	158	67,297
4974+00	100	17	71.48	134	29,367	0.00	0	0	27,973	22.80	84.44	158	62,612	22.80	84.44	158	67,455
4975+00	100	15.2	59.63	112	29,479	0.00	0	0	27,973	22.80	84.44	158	62,770	22.80	84.44	158	67,613
4976+00	100	17.2	60	113	29,592	0.00	0	0	27,973	22.80	84.44	158	62,928	22.80	84.44	158	67,771
4977+00	100	25	78.15	147	29,739	0.00	0	0	27,973	22.80	84.44	158	63,086	22.80	84.44	158	67,929
4978+00	100	19.8	82.96	156	29,895	0.00	0	0	27,973	22.80	84.44	158	63,244	22.80	84.44	158	68,087
4979+00	100	18	70	131	30,026	0.00	0	0	27,973	22.80	84.44	158	63,402	22.80	84.44	158	68,245
4980+00	100	21.9	73.89	139	30,165	0.00	0	0	27,973	22.80	84.44	158	63,560	22.80	84.44	158	68,403
4981+00	100	20.5	78.52	147	30,312	0.00	0	0	27,973	22.80	84.44	158	63,718	22.80	84.44	158	68,561
4982+00	100	22.7	80	150	30,462	0.00	0	0	27,973	22.80	84.44	158	63,876	28.90	95.74	180	68,741
4982+30	30	21	24.28	46	30,508	0.00	0	0	27,973	22.80	25.33	47	63,923	23.00	28.83	54	68,795
4982+70	40	13	25.19	47	30,555	0.00	0	0	27,973	22.80	33.78	63	63,986	29.00	38.52	72	68,867
4983+00	30	13.2	14.56	27	30,582	0.00	0	0	27,973	22.80	25.33	47	64,033	22.80	28.78	54	68,921
4984+00	100	18.2	58.15	109	30,691	0.00	0	0	27,973	22.80	84.44	158	64,191	22.80	84.44	158	69,079
4985+00	100	23	76.3	143	30,834	0.00	0	0	27,973	22.80	84.44	158	64,349	22.80	84.44	158	69,237
4985+29	29	21.6	24.17	45	30,879	0.00	0	0	27,973	22.80	24.72	46	64,395	22.80	24.72	46	69,283
4986+00	71	22.3	57.5	108	30,987	0.00	0	0	27,973	22.80	59.73	112	64,507	22.80	59.73	112	69,395
4986+72	72	22.3	59.17	111	31,098	0.00	0	0	27,973	22.80	60.5	113	64,620	22.80	60.5	113	69,508
4987+00	28	22.1	23.32	44	31,142	0.00	0	0	27,973	22.80	23.95	45	64,665	22.80	23.95	45	69,553

*CL 3M aggregate based on an approximate 30 Ft width and 12 In depth.

**End Areas and quantities determined from cross section end areas.

This document was originally issued and sealed by Jeffrey T. Lansink Registration Number PE-5244,On 11/3/2015 and the original document is stored at the North Dakota Department of Transportation

Data Tables
Aggregate Calculations

ND 23 - ND 28 to County Rd 13

STATE	PROJECT NO.	SECTION NO.	SHEET NO.
ND	SOIB-SOI-4-023(019)087	11	11

Aggregate Calculations Table

		Aggregate CL 3M								Salvaged Base Course							
		Mine & Blend**				Reconstruct*				Widen Left**				Widen Right**			
Station	Distance (Ft)	End Area (SF)	Volume (CY)	Ton (1.875 Ton/CY)	Accumulated Ton	End Area (SF)	Volume (CY)	Ton (1.875 Ton/CY)	Accumulated Ton	End Area (SF)	Volume (CY)	Ton (1.875 Ton/CY)	Accumulated Ton	End Area (SF)	Volume (CY)	Ton (1.875 Ton/CY)	Accumulated Ton
4988+00	100	21.4	80.56	151	31,293	0.00	0	0	27,973	22.80	84.44	158	64,823	22.80	84.44	158	69,711
4988+14	14	20.2	10.79	20	31,313	0.00	0	0	27,973	22.70	11.8	22	64,845	22.80	11.83	22	69,733
4989+00	86	14.8	55.73	104	31,417	0.00	0	0	27,973	22.20	71.5	134	64,979	22.90	72.77	136	69,869
4990+00	100	0	27.41	51	31,468	30.00	55.56	104	28,077	21.60	81.11	152	65,131	22.90	84.81	159	70,028
4990+72	72	0	0	0	31,468	30.00	79.6	149	28,226	21.20	56.78	106	65,237	23.40	61.42	115	70,143
4991+00	28	0	0	0	31,468	30.00	31.51	59	28,285	21.30	22.32	42	65,279	24.10	24.95	47	70,190
4992+00	100	0	0	0	31,468	30.00	111.11	208	28,493	21.20	78.7	148	65,427	24.10	89.26	167	70,357
4993+00	100	0	0	0	31,468	30.00	111.11	208	28,701	21.20	78.52	147	65,574	24.10	89.26	167	70,524
4994+00	100	0	0	0	31,468	30.00	111.11	208	28,909	21.20	78.52	147	65,721	24.10	89.26	167	70,691
4995+00	100	0	0	0	31,468	30.00	111.11	208	29,117	21.20	78.52	147	65,868	24.10	89.26	167	70,858
4995+16	16	0	0	0	31,468	30.00	17.78	33	29,150	21.20	12.56	24	65,892	24.10	14.28	27	70,885
4996+00	84	0	0	0	31,468	30.00	93.33	175	29,325	21.20	65.96	124	66,016	24.10	74.98	141	71,026
4997+00	100	0	0	0	31,468	30.00	111.11	208	29,533	21.20	78.52	147	66,163	24.10	89.26	167	71,193
4998+00	100	0	0	0	31,468	30.00	111.11	208	29,741	21.20	78.52	147	66,310	24.10	89.26	167	71,360
4998+65	65	0	0	0	31,468	30.00	72.22	135	29,876	21.20	51.04	96	66,406	24.10	58.02	109	71,469
4999+00	35	0	0	0	31,468	30.00	38.89	73	29,949	21.20	27.48	52	66,458	24.10	31.24	59	71,528
5000+00	100	0	0	0	31,468	30.00	111.11	208	30,157	21.20	78.52	147	66,605	24.10	89.26	167	71,695
5001+00	100	0	0	0	31,468	30.00	111.11	208	30,365	21.20	78.52	147	66,752	24.10	89.26	167	71,862
5002+00	100	0	0	0	31,468	30.00	111.11	208	30,573	21.20	78.52	147	66,899	24.10	89.26	167	72,029
5003+00	100	0	0	0	31,468	30.00	111.11	208	30,781	21.20	78.52	147	67,046	24.10	89.26	167	72,196
5004+00	100	0	0	0	31,468	30.00	111.11	208	30,989	21.20	78.52	147	67,193	24.10	89.26	167	72,363
5004+16	16	0	0	0	31,468	30.00	17.78	33	31,022	21.20	12.56	24	67,217	24.10	14.28	27	72,390
5005+00	84	0	0	0	31,468	30.00	93.33	175	31,197	21.20	65.96	124	67,341	24.10	74.98	141	72,531
5006+00	100	0	0	0	31,468	30.00	111.11	208	31,405	21.20	78.52	147	67,488	24.10	89.26	167	72,698
5007+00	100	0	0	0	31,468	30.00	111.11	208	31,613	21.20	78.52	147	67,635	24.10	89.26	167	72,865
5008+00	100	0	0	0	31,468	30.00	111.11	208	31,821	21.20	78.52	147	67,782	24.10	89.26	167	73,032
5009+00	100	0	0	0	31,468	30.00	111.11	208	32,029	21.20	78.52	147	67,929	24.10	89.26	167	73,199
5010+00	100	0	0	0	31,468	30.00	111.11	208	32,237	21.20	78.52	147	68,076	24.10	89.26	167	73,366
5011+00	100	0	0	0	31,468	30.00	111.11	208	32,445	21.20	78.52	147	68,223	24.10	89.26	167	73,533
5012+00	100	0	0	0	31,468	30.00	111.11	208	32,653	21.20	78.52	147	68,370	24.10	89.26	167	73,700
5013+00	100	0	0	0	31,468	30.00	111.11	208	32,861	21.20	78.52	147	68,517	24.10	89.26	167	73,867
5013+80	80	0	0	0	31,468	30.00	88.89	167	33,028	21.20	62.81	118	68,635	24.10	71.41	134	74,001
5013+89	9	0	0	0	31,468	30.00	10.53	20	33,048	21.20	7.44	14	68,649	24.10	8.46	16	74,017
5014+00	11	0	0	0	31,468	30.00	11.69	22	33,070	21.30	8.28	16	68,665	24.10	9.39	18	74,035
5015+00	100	0	0	0	31,468	30.00	111.11	208	33,278	21.80	79.81	150	68,815	23.40	87.96	165	74,200
5016+00	100	0	0	0	31,468	30.00	111.11	208	33,486	22.50	82.04	154	68,969	22.80	85.56	160	74,360
5016+29	29	0	0	0	31,468	30.00	32.22	60	33,546	22.60	24.22	45	69,014	22.80	24.49	46	74,406
5016+47	18	0	0	0	31,468	30.00	20.11	38	33,584	22.80	15.22	29	69,043	22.80	15.28	29	74,435
5017+00	53	0	0	0	31,468	30.00	58.78	110	33,694	22.80	44.67	84	69,127	22.80	44.67	84	74,519
5017+89	89	0	0	0	31,468	30.00	99.42	186	33,880	22.80	75.56	142	69,269	22.80	75.56	142	74,661
5018+00	11	0	0	0	31,468	30.00	11.69	22	33,902	22.80	8.88	17	69,286	22.80	8.88	17	74,678
5019+00	100	0	0	0	31,468	30.00	111.11	208	34,110	22.80	84.44	158	69,444	22.80	84.44	158	74,836
5019+32	32	0	0	0	31,468	30.00	35.39	66	34,176	22.80	26.9	50	69,494	22.80	26.9	50	74,886
5020+00	68	0	0	0	31,468	30.00	75.72	142	34,318	22.80	57.55	108	69,602	22.80	57.55	108	74,994
5020+28	28	0	0	0	31,468	30.00	31.11	58	34,376	22.80	23.64	44	69,646	22.80	23.64	44	75,038
5021+00	72	0	0	0	31,468	30.00	80	150	34,526	22.80	60.8	114	69,760	22.80	60.8	114	75,152
5022+00	100	0	0	0	31,468	30.00	111.11	208	34,734	22.80	84.44	158	69,918	22.80	84.44	158	75,310
5023+00	100	0	0	0	31,468	30.00	111.11	208	34,942	22.80	84.44	158	70,076	22.80	84.44	158	75,468
5024+00	100	0	0	0	31,468	30.00	111.11	208	35,150	22.80	84.44	158	70,234	22.80	84.44	158	75,626

*CL 3M aggregate based on an approximate 30 Ft width and 12 In depth.

**End Areas and quantities determined from cross section end areas.

This document was originally issued and sealed by Jeffrey T. Lansink Registration Number PE-5244,On 11/3/2015 and the original document is stored at the North Dakota Department of Transportation

Data Tables
Aggregate Calculations

ND 23 - ND 28 to County Rd 13

STATE	PROJECT NO.	SECTION NO.	SHEET NO.
ND	SOIB-SOI-4-023(019)087	11	12

Aggregate Calculations Table

		Aggregate CL 3M								Salvaged Base Course							
		Mine & Blend**				Reconstruct*				Widen Left**				Widen Right**			
Station	Distance (Ft)	End Area (SF)	Volume (CY)	Ton (1.875 Ton/CY)	Accumulated Ton	End Area (SF)	Volume (CY)	Ton (1.875 Ton/CY)	Accumulated Ton	End Area (SF)	Volume (CY)	Ton (1.875 Ton/CY)	Accumulated Ton	End Area (SF)	Volume (CY)	Ton (1.875 Ton/CY)	Accumulated Ton
5025+00	100	0	0	0	31,468	30.00	111.11	208	35,358	22.80	84.44	158	70,392	22.80	84.44	158	75,784
5026+00	100	0	0	0	31,468	30.00	111.11	208	35,566	22.80	84.44	158	70,550	22.80	84.44	158	75,942
5027+00	100	0	0	0	31,468	30.00	111.11	208	35,774	22.80	84.44	158	70,708	22.80	84.44	158	76,100
5028+00	100	0	0	0	31,468	30.00	111.11	208	35,982	22.80	84.44	158	70,866	22.80	84.44	158	76,258
5029+00	100	0	0	0	31,468	30.00	111.11	208	36,190	22.80	84.44	158	71,024	22.80	84.44	158	76,416
5030+00	100	0	0	0	31,468	30.00	111.11	208	36,398	22.80	84.44	158	71,182	22.80	84.44	158	76,574
5031+00	100	0	0	0	31,468	30.00	111.11	208	36,606	22.80	84.44	158	71,340	22.20	83.33	156	76,730
5032+00	100	0	0	0	31,468	30.00	111.11	208	36,814	22.80	84.44	158	71,498	22.80	83.33	156	76,886
5033+00	100	0	0	0	31,468	30.00	111.11	208	37,022	22.80	84.44	158	71,656	22.80	84.44	158	77,044
5034+00	100	0	0	0	31,468	30.00	111.11	208	37,230	22.80	84.44	158	71,814	22.80	84.44	158	77,202
5035+00	100	0	0	0	31,468	30.00	111.11	208	37,438	22.80	84.44	158	71,972	22.80	84.44	158	77,360
5036+00	100	12.4	22.96	43	31,511	0.00	55.56	104	37,542	22.80	84.44	158	72,130	29.40	96.67	181	77,541
5036+30	30	12.7	13.94	26	31,537	0.00	0	0	37,542	22.60	25.22	47	72,177	22.50	28.83	54	77,595
5037+00	70	18.2	40.06	75	31,612	0.00	0	0	37,542	22.80	58.85	110	72,287	22.80	58.72	110	77,705
5037+10	10	18.6	6.99	13	31,625	0.00	0	0	37,542	22.80	8.66	16	72,303	22.80	8.66	16	77,721
5037+80	70	16.5	45.62	86	31,711	0.00	0	0	37,542	22.80	59.26	111	72,414	22.80	59.26	111	77,832
5038+00	20	16.7	12.03	23	31,734	0.00	0	0	37,542	22.80	16.53	31	72,445	22.80	16.53	31	77,863
5038+51	51	15	29.7	56	31,790	0.00	0	0	37,542	22.80	42.73	80	72,525	22.80	42.73	80	77,943
5039+00	49	12	24.7	46	31,836	0.00	0	0	37,542	32.30	50.41	95	72,620	22.00	40.98	77	78,020
5039+17	17	9.9	7.07	13	31,849	0.00	0	0	37,542	32.40	20.88	39	72,659	21.90	14.17	27	78,047
5040+00	83	20	45.72	86	31,935	0.00	0	0	37,542	23.30	85.17	160	72,819	21.90	66.97	126	78,173
5041+00	100	7.2	50.37	94	32,029	0.00	0	0	37,542	23.30	86.3	162	72,981	21.80	80.93	152	78,325
5042+00	100	24.1	57.96	109	32,138	0.00	0	0	37,542	23.30	86.3	162	73,143	21.80	80.74	151	78,476
5043+00	100	30.3	100.74	189	32,327	0.00	0	0	37,542	23.30	86.3	162	73,305	21.80	80.74	151	78,627
5044+00	100	30	111.67	209	32,536	0.00	0	0	37,542	23.30	86.3	162	73,467	21.80	80.74	151	78,778
5044+28	28	31.3	31.79	60	32,596	0.00	0	0	37,542	23.30	24.16	45	73,512	21.80	22.61	42	78,820
5045+00	72	29.3	80.8	152	32,748	0.00	0	0	37,542	23.30	62.13	116	73,628	21.80	58.13	109	78,929
5046+00	100	23.1	97.04	182	32,930	0.00	0	0	37,542	23.30	86.3	162	73,790	21.90	80.93	152	79,081
5046+45	45	31.2	45.25	85	33,015	0.00	0	0	37,542	23.30	38.83	73	73,863	21.90	36.5	68	79,149
5047+00	55	27	59.28	111	33,126	0.00	0	0	37,542	23.30	47.46	89	73,952	28.00	50.82	95	79,244
5048+00	100	24.4	95.19	178	33,304	0.00	0	0	37,542	28.20	95.37	179	74,131	21.90	92.41	173	79,417
5049+00	100	30.8	102.22	192	33,496	0.00	0	0	37,542	28.20	104.44	196	74,327	21.90	81.11	152	79,569
5050+00	100	30.2	112.96	212	33,708	0.00	0	0	37,542	28.20	104.44	196	74,523	21.90	81.11	152	79,721
5051+00	100	30.3	112.04	210	33,918	0.00	0	0	37,542	28.20	104.44	196	74,719	21.90	81.11	152	79,873
5052+00	100	22.4	97.59	183	34,101	0.00	0	0	37,542	28.20	104.44	196	74,915	21.90	81.11	152	80,025
5053+00	100	16.1	71.3	134	34,235	0.00	0	0	37,542	24.20	97.04	182	75,097	21.90	81.11	152	80,177
5054+00	100	14.6	56.85	107	34,342	0.00	0	0	37,542	23.40	88.15	165	75,262	21.90	81.11	152	80,329
5055+00	100	15.8	56.3	106	34,448	0.00	0	0	37,542	23.30	86.48	162	75,424	21.90	81.11	152	80,481
5056+00	100	15.8	58.52	110	34,558	0.00	0	0	37,542	23.30	86.3	162	75,586	21.90	81.11	152	80,633
5057+00	100	14	55.19	103	34,661	0.00	0	0	37,542	23.30	86.3	162	75,748	21.90	81.11	152	80,785
5058+00	100	10.1	44.63	84	34,745	0.00	0	0	37,542	32.00	102.41	192	75,940	21.90	81.11	152	80,937
5059+00	100	9	35.37	66	34,811	0.00	0	0	37,542	31.80	118.15	222	76,162	21.90	81.11	152	81,089
5060+00	100	6.3	28.33	53	34,864	0.00	0	0	37,542	32.30	118.7	223	76,385	21.90	81.11	152	81,241
5061+00	100	8.8	27.96	52	34,916	0.00	0	0	37,542	23.30	102.96	193	76,578	21.90	81.11	152	81,393
5061+50	50	16.9	23.8	45	34,961	0.00	0	0	37,542	23.30	43.15	81	76,659	21.90	40.56	76	81,469
5062+00	50	16.1	30.56	57	35,018	0.00	0	0	37,542	23.30	43.15	81	76,740	21.90	40.56	76	81,545
5063+00	100	13.8	55.37	104	35,122	0.00	0	0	37,542	30.30	99.26	186	76,926	21.90	81.11	152	81,697
5064+00	100	15.3	53.89	101	35,223	0.00	0	0	37,542	23.30	99.26	186	77,112	21.90	81.11	152	81,849
5065+00	100	23.4	71.67	134	35,357	0.00	0	0	37,542	23.30	86.3	162	77,274	21.90	81.11	152	82,001

*CL 3M aggregate based on an approximate 30 Ft width and 12 In depth.

**End Areas and quantities determined from cross section end areas.

This document was originally issued and sealed by Jeffrey T. Lansink Registration Number PE-5244,On 11/3/2015 and the original document is stored at the North Dakota Department of Transportation

Data Tables
Aggregate Calculations

ND 23 - ND 28 to County Rd 13

Aggregate Calculations Table

		Aggregate CL 3M								Salvaged Base Course							
		Mine & Blend**				Reconstruct*				Widen Left**				Widen Right**			
Station	Distance (Ft)	End Area (SF)	Volume (CY)	Ton (1.875 Ton/CY)	Accumulated Ton	End Area (SF)	Volume (CY)	Ton (1.875 Ton/CY)	Accumulated Ton	End Area (SF)	Volume (CY)	Ton (1.875 Ton/CY)	Accumulated Ton	End Area (SF)	Volume (CY)	Ton (1.875 Ton/CY)	Accumulated Ton
5065+72	72	22.2	60.43	113	35,470	0.00	0	0	37,542	23.30	61.75	116	77,390	21.90	58.04	109	82,110
5066+00	28	22.4	23.49	44	35,514	0.00	0	0	37,542	22.90	24.33	46	77,436	22.20	23.23	44	82,154
5066+38	38	22	31.57	59	35,573	0.00	0	0	37,542	22.80	32.49	61	77,497	22.80	31.99	60	82,214
5067+00	62	18.5	46.21	87	35,660	0.00	0	0	37,542	22.80	52.03	98	77,595	22.80	52.03	98	82,312
5067+09	9	18	5.79	11	35,671	0.00	0	0	37,542	22.80	7.23	14	77,609	22.80	7.23	14	82,326
5067+79	70	17.2	45.74	86	35,757	0.00	0	0	37,542	22.80	59.25	111	77,720	22.80	59.25	111	82,437
5068+00	21	17.1	13.51	25	35,782	0.00	0	0	37,542	22.80	17.96	34	77,754	22.80	17.96	34	82,471
5069+00	100	10.4	50.93	95	35,877	0.00	0	0	37,542	22.80	84.44	158	77,912	22.80	84.44	158	82,629
5070+00	100	24.4	64.44	121	35,998	0.00	0	0	37,542	22.80	84.44	158	78,070	22.80	84.44	158	82,787
5071+00	100	21.6	85.19	160	36,158	0.00	0	0	37,542	22.80	84.44	158	78,228	31.80	101.11	190	82,977
Totals					**36,158**				**37,542**				**78,228**				**82,977**

*CL 3M aggregate based on an approximate 30 Ft width and 12 In depth.

**End Areas and quantities determined from cross section end areas.

This document was originally issued and sealed by Jeffrey T. Lansink Registration Number PE-5244,On 11/3/2015 and the original document is stored at the North Dakota Department of Transportation

Data Tables
Aggregate Calculations

ND 23 - ND 28 to County Rd 13

HBP Calculations

Station	Distance (FT)	Description	Hot Mix Asphalt				Superpave FAA 45		PG 58-28		PG 64-34		Prime Coat MC70 or 250 Liquid Asphalt		Prime Coat MC70 or 250 Liquid Asphalt		Tack Coat - SS1H or CSS1H or MS1 Emulsified Asphalt		Blotter Material CL 44	
			Pavement Width (FT)	Pavement Area - Plan (SY)	End Area (SF)	Volume (CY)	Ton (2 Ton/CY)	Accumulated Ton	Ton (6% HBP, Bottom 2 Lifts)	Accumulated Ton	Ton (6% HBP, Top Lift)	Accumulated Ton	Gal (0.25 Gal/SY)	Accumulated Gal	Gal (0.15 Gal/SY)	Accumulated Gal	Gal (0.05 Gal/SY/Lift)	Accumulated Gal	Ton (15 LB/SY)	Accumulated Ton
4606+40.00																				
	1,047	WB, EB Passing Lane & WB Left Turn Lane	68	7,913.39	32.09	1,245	2,490	2,490	97	97	52	52	1,978	1,978	454	454	791	791	59	59
4616+87.36																				
	5,233	EB Passing Lane	48	27,907.41	22.92	4,442	8,884	11,374	346	444	187	239	6,977	8,955	2,268	2,721	2,791	3,582	209	268
4669+20.00																				
	11,980	Two-Lane Roadway	40	53,244.44	19.26	8,546	17,092	28,466	667	1,110	359	598	13,311	22,266	5,191	7,913	5,324	8,907	399	667
4789+00.00																				
	5,420	WB Passing Lane	48	28,906.67	22.92	4,601	9,202	37,668	359	1,469	193	791	7,227	29,493	2,349	10,262	2,891	11,797	217	884
4843+20.00																				
	2,480	Two-Lane Roadway	40	11,022.22	19.26	1,769	3,538	41,206	138	1,607	74	865	2,756	32,249	1,075	11,336	1,102	12,899	83	967
4868+00.00																				
	6,320	EB Passing Lane	48	33,706.67	22.92	5,365	10,730	51,936	418	2,026	225	1,091	8,427	40,675	2,739	14,075	3,371	16,270	253	1,220
4931+20.00																				
	11,585	Two-Lane Roadway	40	51,488.89	19.26	8,264	16,528	68,464	645	2,670	347	1,438	12,872	53,547	5,020	19,095	5,149	21,419	386	1,606
5047+05.00																				
	710	WB Right Turn Lane	48	3,786.67	22.92	603	1,206	69,670	47	2,717	25	1,463	947	54,494	308	19,403	379	21,798	28	1,634
5054+15.00																				
	1,685	Two-Lane Roadway	40	7,488.89	19.26	1,202	2,404	72,074	94	2,811	50	1,514	1,872	56,366	730	20,133	749	22,547	56	1,690
5071+00.00																				
Section Line Approaches							2,885	74,959	115	2,926	58	1,572	-	-	-	-	405	22,952	-	-
Private Drive Approaches							105	75,064	4	2,930	2	1,574	-	-	-	-	25	22,977	-	-
Field Drive Approaches							184	75,248	7	2,937	4	1,578	-	-	-	-	23	23,000	-	-
Totals								**75,248**		**2,937**		**1,578**		**56,366**		**20,133**		**23,000**		**1,690**

This document was originally issued and sealed by Jeffrey T. Lansink Registration Number PE- 5244, on 11/3/15 and the original document is stored at the North Dakota Department of Transportation

Data Tables

HBP Calculations

ND 23 - ND 28 to County Rd 13

Earthwork Summary

Location	Common Excavation - Type A (CY) Pay Item	Embankment (CY)	Borrow Embankment (CY) Pay Item	Common Excavation- Subcut (CY)
	A	B	C = B - A	
Hwy 23 - SOIB-SOI-023(019)087	166,458	622,968	456,510	6,443
156th St SW Realignment	408	1,727	1,319	0
Ward County Road 13 Realignment	511	1,301	790	0
Embankment for Culvert Extensions	0	978	978	0
Totals	**167,377**	**626,974**	**459,597**	**6,443**

Notes:

1. This computation report is not a balance sheet. The Contractor shall calculate its own balance of materials.
2. An additional volume of 25% to allow for shrinkage is included in all embankment volumes above water.
   An additional volume of 50% has been included for all embankment volumes below water to allow for shrinkage.

Topsoil Summary

Location	Topsoil Stripping (CY)	Topsoil Placement (CY)
Hwy 23 - SOIB-SOI-4-023(019)087	82,762	82,762
Totals	**82,762**	**82,762**

This document was originally issued and sealed by Jeffrey T. Lansink Registration Number PE- 5244, on 11/3/15 and the original document is stored at the North Dakota Department of Transportation

Data Tables

Earthwork and Riprap Summary

ND 23 - ND 28 to County Rd 13

STATE	PROJECT NO.	SECTION NO.	SHEET NO.
ND	SOIB-SOI-4-023(019)087	11	16

		Common Excavation - Type A			Embankment							
					Fill Above Water				Fill Below Water			
Sta	Distance	Area (Sq FT)	Volume (CY)	Accumulated Volume (CY)	Area (Sq FT)	Volume (CY)	Adjusted Volume (1.25)	Accumulated Volume (CY)	Area (Sq FT)	Volume (CY)	Adjusted Volume (1.50)	Accumulated Volume (CY)
4606+40.00		70.30			53.00				0.00			
4607+00.00	60.00	136.60	230	230	123.20	196	245	245	0.00	0	0	0
4607+43.00	43.00	355.10	392	622	0.00	98	123	368	0.00	0	0	0
4608+00.00	57.00	604.30	1,013	1,635	0.80	1	1	369	0.00	0	0	0
4609+00.00	100.00	514.00	2,071	3,706	7.10	15	19	388	0.00	0	0	0
4610+00.00	100.00	971.50	2,751	6,457	10.00	32	40	428	0.00	0	0	0
4611+00.00	100.00	2,175.30	5,827	12,284	0.00	19	24	452	0.00	0	0	0
4612+00.00	100.00	2,129.80	7,972	20,256	0.00	0	0	452	0.00	0	0	0
4613+00.00	100.00	720.00	5,277	25,533	0.00	0	0	452	0.00	0	0	0
4613+37.00	37.00	727.40	992	26,525	0.00	0	0	452	0.00	0	0	0
4614+00.00	63.00	615.50	1,567	28,092	0.00	0	0	452	0.00	0	0	0
4615+00.00	100.00	365.60	1,817	29,909	8.90	16	20	472	0.00	0	0	0
4616+00.00	100.00	184.20	1,018	30,927	44.40	99	124	596	0.00	0	0	0
4617+00.00	100.00	56.70	446	31,373	108.10	282	353	949	0.00	0	0	0
4618+00.00	100.00	11.20	126	31,499	162.60	501	626	1,575	0.00	0	0	0
4619+00.00	100.00	1.40	23	31,522	163.50	604	755	2,330	0.00	0	0	0
4620+00.00	100.00	0.70	4	31,526	159.70	599	749	3,079	0.00	0	0	0
4621+00.00	100.00	1.10	3	31,529	233.30	728	910	3,989	0.00	0	0	0
4622+00.00	100.00	0.90	4	31,533	196.40	796	995	4,984	0.00	0	0	0
4623+00.00	100.00	1.40	4	31,537	195.20	725	906	5,890	0.00	0	0	0
4624+00.00	100.00	221.80	413	31,950	138.40	618	773	6,663	0.00	0	0	0
4625+00.00	100.00	228.60	834	32,784	140.70	517	646	7,309	0.00	0	0	0
4626+00.00	100.00	278.60	939	33,723	138.30	517	646	7,955	0.00	0	0	0
4627+00.00	100.00	309.80	1,090	34,813	139.40	514	643	8,598	0.00	0	0	0
4628+00.00	100.00	85.10	731	35,544	128.60	496	620	9,218	0.00	0	0	0
4629+00.00	100.00	0.60	159	35,703	180.10	572	715	9,933	0.00	0	0	0
4630+00.00	100.00	0.10	1	35,704	296.30	882	1,103	11,036	0.00	0	0	0
4631+00.00	100.00	0.30	1	35,705	263.50	1,037	1,296	12,332	0.00	0	0	0
4632+00.00	100.00	0.00	1	35,706	420.90	1,267	1,584	13,916	0.00	0	0	0
4632+37.83	37.83	0.00	0	35,706	474.20	627	784	14,700	0.00	0	0	0
4633+00.00	62.17	0.00	0	35,706	367.50	969	1,211	15,911	0.00	0	0	0
4634+00.00	100.00	1.30	2	35,708	149.50	957	1,196	17,107	0.00	0	0	0
4635+00.00	100.00	4.80	11	35,719	23.40	320	400	17,507	0.00	0	0	0
4635+20.00	20.00	7.00	4	35,723	121.70	54	68	17,575	0.00	0	0	0
4635+22.00	2.00	7.00	1	35,724	124.50	9	11	17,586	0.00	0	0	0
4636+00.00	78.00	90.60	141	35,865	128.00	365	456	18,042	0.00	0	0	0
4637+00.00	100.00	120.40	391	36,256	134.60	486	608	18,650	0.00	0	0	0
4638+00.00	100.00	122.60	450	36,706	144.80	517	646	19,296	0.00	0	0	0
4639+00.00	100.00	125.40	459	37,165	150.60	547	684	19,980	0.00	0	0	0
4640+00.00	100.00	111.00	438	37,603	144.70	547	684	20,664	0.00	0	0	0
4641+00.00	100.00	94.90	381	37,984	144.10	535	669	21,333	0.00	0	0	0
4642+00.00	100.00	56.10	280	38,264	146.70	539	674	22,007	0.00	0	0	0
4643+00.00	100.00	79.60	251	38,515	142.70	536	670	22,677	0.00	0	0	0
4644+00.00	100.00	90.80	316	38,831	156.70	554	693	23,370	0.00	0	0	0

This document was originally issued and sealed by Jeffrey T. Lansink Registration Number PE-5244,On 11/3/2015 and the original document is stored at the North Dakota Department of Transportation

Data Tables
Earthwork – Average End Area Tables

ND 23 - ND 28 to County Rd 13

STATE	PROJECT NO.	SECTION NO.	SHEET NO.
ND	SOIB-SOI-4-023(019)087	11	17

		Common Excavation - Type A			Embankment							
					Fill Above Water				Fill Below Water			
Sta	Distance	Area (Sq FT)	Volume (CY)	Accumulated Volume (CY)	Area (Sq FT)	Volume (CY)	Adjusted Volume (1.25)	Accumulated Volume (CY)	Area (Sq FT)	Volume (CY)	Adjusted Volume (1.50)	Accumulated Volume (CY)
4645+00.00	100.00	82.60	321	39,152	153.10	574	718	24,088	0.00	0	0	0
4645+78.00	78.00	1.40	121	39,273	153.20	442	553	24,641	0.00	0	0	0
4646+00.00	22.00	5.50	3	39,276	17.20	69	86	24,727	0.00	0	0	0
4646+15.00	15.00	7.40	4	39,280	175.10	53	66	24,793	0.00	0	0	0
4647+00.00	85.00	44.90	82	39,362	128.50	478	598	25,391	0.00	0	0	0
4648+00.00	100.00	233.60	516	39,878	130.80	480	600	25,991	0.00	0	0	0
4649+00.00	100.00	836.60	1,982	41,860	126.00	476	595	26,586	0.00	0	0	0
4650+00.00	100.00	664.10	2,779	44,639	127.60	470	588	27,174	0.00	0	0	0
4651+00.00	100.00	614.50	2,368	47,007	129.30	476	595	27,769	0.00	0	0	0
4652+00.00	100.00	173.90	1,460	48,467	137.30	494	618	28,387	0.00	0	0	0
4653+00.00	100.00	265.70	814	49,281	126.20	488	610	28,997	0.00	0	0	0
4654+00.00	100.00	2.50	497	49,778	304.00	797	996	29,993	0.00	0	0	0
4655+00.00	100.00	2.20	9	49,787	342.70	1,198	1,498	31,491	0.00	0	0	0
4656+00.00	100.00	0.80	6	49,793	430.50	1,432	1,790	33,281	8.10	15	23	23
4657+00.00	100.00	0.70	3	49,796	415.40	1,566	1,958	35,239	3.80	22	33	56
4658+00.00	100.00	165.30	307	50,103	291.80	1,310	1,638	36,877	0.50	8	12	68
4659+00.00	100.00	292.30	847	50,950	166.60	849	1,061	37,938	0.00	1	2	70
4660+00.00	100.00	335.90	1,163	52,113	151.50	589	736	38,674	0.00	0	0	70
4661+00.00	100.00	104.80	816	52,929	122.90	508	635	39,309	0.00	0	0	70
4661+85.00	85.00	44.00	234	53,163	54.70	280	350	39,659	0.00	0	0	70
4662+00.00	15.00	40.80	24	53,187	2.70	16	20	39,679	0.00	0	0	70
4663+00.00	100.00	60.60	188	53,375	171.20	322	403	40,082	0.00	0	0	70
4664+00.00	100.00	105.30	307	53,682	153.20	601	751	40,833	0.00	0	0	70
4665+00.00	100.00	150.60	474	54,156	185.00	626	783	41,616	0.00	0	0	70
4666+00.00	100.00	163.60	582	54,738	296.10	891	1,114	42,730	0.00	0	0	70
4667+00.00	100.00	0.00	303	55,041	796.60	2,024	2,530	45,260	23.10	43	65	135
4668+00.00	100.00	0.00	0	55,041	1,123.90	3,556	4,445	49,705	144.50	310	465	600
4669+00.00	100.00	0.00	0	55,041	1,333.70	4,551	5,689	55,394	211.30	659	989	1,589
4670+00.00	100.00	0.00	0	55,041	1,668.80	5,560	6,950	62,344	324.10	991	1,487	3,076
4670+76.00	76.00	0.00	0	55,041	1,759.60	4,825	6,031	68,375	462.90	1,108	1,662	4,738
4671+00.00	24.00	0.00	0	55,041	1,768.70	1,568	1,960	70,335	439.70	401	602	5,340
4672+00.00	100.00	0.00	0	55,041	1,788.90	6,588	8,235	78,570	456.50	1,660	2,490	7,830
4673+00.00	100.00	0.00	0	55,041	1,792.20	6,632	8,290	86,860	599.40	1,955	2,933	10,763
4674+00.00	100.00	0.00	0	55,041	1,695.40	6,459	8,074	94,934	533.20	2,097	3,146	13,909
4675+00.00	100.00	0.00	0	55,041	1,520.90	5,956	7,445	102,379	478.30	1,873	2,810	16,719
4676+00.00	100.00	0.00	0	55,041	1,277.20	5,182	6,478	108,857	318.80	1,476	2,214	18,933
4677+00.00	100.00	0.80	1	55,042	879.00	3,993	4,991	113,848	21.30	630	945	19,878
4678+00.00	100.00	292.60	543	55,585	368.10	2,309	2,886	116,734	0.00	39	59	19,937
4679+00.00	100.00	739.80	1,912	57,497	112.80	891	1,114	117,848	0.00	0	0	19,937
4680+00.00	100.00	529.10	2,350	59,847	161.10	507	634	118,482	0.00	0	0	19,937
4681+00.00	100.00	680.80	2,241	62,088	93.10	471	589	119,071	0.00	0	0	19,937
4682+00.00	100.00	716.60	2,588	64,676	130.20	414	518	119,589	0.00	0	0	19,937
4683+00.00	100.00	112.70	1,536	66,212	139.20	499	624	120,213	0.00	0	0	19,937
4684+00.00	100.00	0.60	210	66,422	146.20	529	661	120,874	0.00	0	0	19,937

This document was originally issued and sealed by Jeffrey T. Lansink Registration Number PE-5244,On 11/3/2015 and the original document is stored at the North Dakota Department of Transportation

Data Tables
Earthwork – Average End Area Tables

ND 23 - ND 28 to County Rd 13

STATE	PROJECT NO.	SECTION NO.	SHEET NO.
ND	SOIB-SOI-4-023(019)087	11	18

		Common Excavation - Type A			Embankment							
					Fill Above Water				Fill Below Water			
Sta	Distance	Area (Sq FT)	Volume (CY)	Accumulated Volume (CY)	Area (Sq FT)	Volume (CY)	Adjusted Volume (1.25)	Accumulated Volume (CY)	Area (Sq FT)	Volume (CY)	Adjusted Volume (1.50)	Accumulated Volume (CY)
4684+50.00	50.00	1.40	2	66,424	470.60	571	714	121,588	0.00	0	0	19,937
4685+00.00	50.00	1.10	2	66,426	120.50	547	684	122,272	0.00	0	0	19,937
4685+48.00	48.00	2.30	3	66,429	27.40	131	164	122,436	0.00	0	0	19,937
4685+98.00	50.00	0.00	2	66,431	388.70	385	481	122,917	0.00	0	0	19,937
4686+00.00	2.00	0.00	0	66,431	408.90	30	38	122,955	0.00	0	0	19,937
4686+68.00	68.00	0.00	0	66,431	494.00	1,137	1,421	124,376	0.00	0	0	19,937
4687+00.00	32.00	0.00	0	66,431	483.00	579	724	125,100	0.00	0	0	19,937
4688+00.00	100.00	0.00	0	66,431	431.10	1,693	2,116	127,216	0.00	0	0	19,937
4689+00.00	100.00	0.00	0	66,431	338.60	1,425	1,781	128,997	0.00	0	0	19,937
4690+00.00	100.00	350.90	650	67,081	150.60	906	1,133	130,130	0.00	0	0	19,937
4691+00.00	100.00	587.30	1,737	68,818	143.00	544	680	130,810	0.00	0	0	19,937
4692+00.00	100.00	37.50	1,157	69,975	143.60	531	664	131,474	0.00	0	0	19,937
4692+50.00	50.00	0.80	35	70,010	520.70	615	769	132,243	0.00	0	0	19,937
4693+00.00	50.00	34.90	33	70,043	134.10	606	758	133,001	0.00	0	0	19,937
4694+00.00	100.00	160.60	362	70,405	119.90	470	588	133,589	0.00	0	0	19,937
4694+45.00	45.00	127.80	240	70,645	69.30	158	198	133,787	0.00	0	0	19,937
4695+00.00	55.00	44.50	175	70,820	133.70	207	259	134,046	0.00	0	0	19,937
4696+00.00	100.00	0.90	84	70,904	303.80	810	1,013	135,059	0.00	0	0	19,937
4696+18.00	18.00	1.00	1	70,905	307.40	204	255	135,314	0.00	0	0	19,937
4697+00.00	82.00	0.50	2	70,907	351.00	1,000	1,250	136,564	0.00	0	0	19,937
4698+00.00	100.00	1.20	3	70,910	213.20	1,045	1,306	137,870	0.00	0	0	19,937
4699+00.00	100.00	3.10	8	70,918	128.70	633	791	138,661	0.00	0	0	19,937
4700+00.00	100.00	87.70	168	71,086	125.10	470	588	139,249	0.00	0	0	19,937
4701+00.00	100.00	99.50	347	71,433	151.40	512	640	139,889	0.00	0	0	19,937
4702+00.00	100.00	90.20	351	71,784	137.90	536	670	140,559	0.00	0	0	19,937
4703+00.00	100.00	110.80	372	72,156	154.40	541	676	141,235	0.00	0	0	19,937
4704+00.00	100.00	148.30	480	72,636	148.40	561	701	141,936	0.00	0	0	19,937
4705+00.00	100.00	72.50	409	73,045	192.30	631	789	142,725	0.00	0	0	19,937
4706+00.00	100.00	126.50	369	73,414	239.10	799	999	143,724	0.00	0	0	19,937
4707+00.00	100.00	88.50	398	73,812	337.30	1,067	1,334	145,058	0.00	0	0	19,937
4708+00.00	100.00	51.80	260	74,072	468.40	1,492	1,865	146,923	0.00	0	0	19,937
4709+00.00	100.00	92.00	266	74,338	639.10	2,051	2,564	149,487	141.30	262	393	20,330
4710+00.00	100.00	22.80	213	74,551	819.10	2,700	3,375	152,862	337.70	887	1,331	21,661
4711+00.00	100.00	15.50	71	74,622	954.70	3,285	4,106	156,968	364.50	1,300	1,950	23,611
4712+00.00	100.00	20.50	67	74,689	975.00	3,574	4,468	161,436	380.50	1,380	2,070	25,681
4713+00.00	100.00	504.00	971	75,660	985.90	3,631	4,539	165,975	290.90	1,243	1,865	27,546
4714+00.00	100.00	23.40	977	76,637	990.50	3,660	4,575	170,550	141.60	801	1,202	28,748
4714+17.00	17.00	0.00	7	76,644	1,010.40	630	788	171,338	140.70	89	134	28,882
4714+75.00	58.00	0.20	0	76,644	1,423.30	2,614	3,268	174,606	0.00	151	227	29,109
4715+00.00	25.00	0.00	0	76,644	883.60	1,068	1,335	175,941	71.90	33	50	29,159
4716+00.00	100.00	135.10	250	76,894	983.90	3,458	4,323	180,264	310.40	708	1,062	30,221
4717+00.00	100.00	189.70	601	77,495	955.30	3,591	4,489	184,753	421.60	1,356	2,034	32,255
4718+00.00	100.00	88.30	515	78,010	881.10	3,401	4,251	189,004	438.20	1,592	2,388	34,643
4718+38.00	38.00	59.30	104	78,114	856.30	1,223	1,529	190,533	402.00	591	887	35,530

This document was originally issued and sealed by Jeffrey T. Lansink Registration Number PE-5244,On 11/3/2015 and the original document is stored at the North Dakota Department of Transportation

Data Tables
Earthwork – Average End Area Tables

ND 23 - ND 28 to County Rd 13

STATE	PROJECT NO.	SECTION NO.	SHEET NO.
ND	SOIB-SOI-4-023(019)087	11	19

		Common Excavation - Type A			Embankment							
					Fill Above Water				Fill Below Water			
Sta	Distance	Area (Sq FT)	Volume (CY)	Accumulated Volume (CY)	Area (Sq FT)	Volume (CY)	Adjusted Volume (1.25)	Accumulated Volume (CY)	Area (Sq FT)	Volume (CY)	Adjusted Volume (1.50)	Accumulated Volume (CY)
4719+00.00	62.00	28.10	100	78,214	806.90	1,910	2,388	192,921	291.60	796	1,194	36,724
4720+00.00	100.00	91.80	222	78,436	610.30	2,624	3,280	196,201	15.60	569	854	37,578
4721+00.00	100.00	858.20	1,759	80,195	325.50	1,733	2,166	198,367	0.00	29	44	37,622
4722+00.00	100.00	848.50	3,161	83,356	122.40	829	1,036	199,403	0.00	0	0	37,622
4723+00.00	100.00	399.30	2,311	85,667	187.10	573	716	200,119	0.00	0	0	37,622
4724+00.00	100.00	492.90	1,652	87,319	161.90	646	808	200,927	0.00	0	0	37,622
4725+00.00	100.00	306.40	1,480	88,799	170.60	616	770	201,697	0.00	0	0	37,622
4726+00.00	100.00	151.20	847	89,646	166.00	623	779	202,476	0.00	0	0	37,622
4727+00.00	100.00	384.40	992	90,638	214.50	705	881	203,357	0.00	0	0	37,622
4728+00.00	100.00	133.80	960	91,598	253.30	866	1,083	204,440	0.00	0	0	37,622
4729+00.00	100.00	340.00	877	92,475	241.20	916	1,145	205,585	0.00	0	0	37,622
4730+00.00	100.00	173.50	951	93,426	144.30	714	893	206,478	0.00	0	0	37,622
4731+00.00	100.00	181.60	658	94,084	115.70	481	601	207,079	0.00	0	0	37,622
4732+00.00	100.00	335.30	957	95,041	105.30	409	511	207,590	0.00	0	0	37,622
4733+00.00	100.00	456.00	1,465	96,506	104.30	388	485	208,075	0.00	0	0	37,622
4734+00.00	100.00	256.70	1,320	97,826	92.30	364	455	208,530	0.00	0	0	37,622
4735+00.00	100.00	2.50	480	98,306	156.50	461	576	209,106	0.00	0	0	37,622
4736+00.00	100.00	1.70	8	98,314	257.00	766	958	210,064	0.70	1	2	37,624
4737+00.00	100.00	2.70	8	98,322	248.30	936	1,170	211,234	14.80	29	44	37,668
4737+77.00	77.00	2.80	8	98,330	265.70	733	916	212,150	0.00	21	32	37,700
4738+00.00	23.00	2.70	2	98,332	184.60	192	240	212,390	0.00	0	0	37,700
4739+00.00	100.00	1.20	7	98,339	175.60	667	834	213,224	0.00	0	0	37,700
4740+00.00	100.00	0.70	4	98,343	300.30	881	1,101	214,325	4.70	9	14	37,714
4741+00.00	100.00	0.00	1	98,344	369.30	1,240	1,550	215,875	48.70	99	149	37,863
4742+00.00	100.00	48.50	90	98,434	340.50	1,314	1,643	217,518	2.30	94	141	38,004
4743+00.00	100.00	62.50	206	98,640	259.50	1,111	1,389	218,907	0.00	4	6	38,010
4744+00.00	100.00	7.90	130	98,770	187.60	828	1,035	219,942	0.00	0	0	38,010
4744+17.00	17.00	0.80	3	98,773	302.50	154	193	220,135	0.00	0	0	38,010
4745+00.00	83.00	21.90	35	98,808	101.10	620	775	220,910	0.00	0	0	38,010
4746+00.00	100.00	57.20	146	98,954	56.30	291	364	221,274	0.00	0	0	38,010
4747+00.00	100.00	65.90	228	99,182	22.40	146	183	221,457	0.00	0	0	38,010
4747+40.00	40.00	115.80	135	99,317	19.80	31	39	221,496	0.00	0	0	38,010
4748+00.00	60.00	88.90	227	99,544	39.40	66	83	221,579	0.00	0	0	38,010
4749+00.00	100.00	226.90	585	100,129	32.10	132	165	221,744	0.00	0	0	38,010
4750+00.00	100.00	320.80	1,014	101,143	22.30	101	126	221,870	0.00	0	0	38,010
4751+00.00	100.00	385.80	1,309	102,452	39.70	115	144	222,014	0.00	0	0	38,010
4752+00.00	100.00	352.00	1,366	103,818	41.90	151	189	222,203	0.00	0	0	38,010
4753+00.00	100.00	320.20	1,245	105,063	66.20	200	250	222,453	0.00	0	0	38,010
4754+00.00	100.00	263.30	1,081	106,144	90.10	289	361	222,814	0.00	0	0	38,010
4755+00.00	100.00	71.00	619	106,763	122.50	394	493	223,307	0.00	0	0	38,010
4756+00.00	100.00	14.40	158	106,921	139.60	485	606	223,913	0.00	0	0	38,010
4757+00.00	100.00	10.60	46	106,967	237.00	697	871	224,784	0.00	0	0	38,010
4758+00.00	100.00	1.00	21	106,988	300.80	996	1,245	226,029	21.90	41	62	38,072
4759+00.00	100.00	0.50	3	106,991	269.50	1,056	1,320	227,349	8.00	55	83	38,155

This document was originally issued and sealed by Jeffrey T. Lansink Registration Number PE-5244,On 11/3/2015 and the original document is stored at the North Dakota Department of Transportation

Data Tables
Earthwork – Average End Area Tables

ND 23 - ND 28 to County Rd 13

STATE	PROJECT NO.	SECTION NO.	SHEET NO.
ND	SOIB-SOI-4-023(019)087	11	20

		Common Excavation - Type A			Embankment							
					Fill Above Water				Fill Below Water			
Sta	Distance	Area (Sq FT)	Volume (CY)	Accumulated Volume (CY)	Area (Sq FT)	Volume (CY)	Adjusted Volume (1.25)	Accumulated Volume (CY)	Area (Sq FT)	Volume (CY)	Adjusted Volume (1.50)	Accumulated Volume (CY)
4760+00.00	100.00	1.40	4	106,995	150.00	777	971	228,320	0.00	15	23	38,178
4761+00.00	100.00	1.20	5	107,000	152.90	561	701	229,021	0.00	0	0	38,178
4762+00.00	100.00	1.40	5	107,005	191.10	637	796	229,817	12.80	24	36	38,214
4763+00.00	100.00	1.90	6	107,011	121.00	578	723	230,540	0.00	24	36	38,250
4764+00.00	100.00	0.80	5	107,016	177.50	553	691	231,231	29.40	54	81	38,331
4765+00.00	100.00	0.60	3	107,019	177.90	658	823	232,054	42.50	133	200	38,531
4766+00.00	100.00	16.90	32	107,051	176.00	655	819	232,873	48.80	169	254	38,785
4767+00.00	100.00	3.80	38	107,089	127.30	562	703	233,576	0.00	90	135	38,920
4767+52.00	52.00	22.30	25	107,114	104.60	223	279	233,855	0.00	0	0	38,920
4768+00.00	48.00	20.80	38	107,152	107.70	189	236	234,091	0.00	0	0	38,920
4769+00.00	100.00	130.10	279	107,431	131.10	442	553	234,644	0.00	0	0	38,920
4770+00.00	100.00	21.50	281	107,712	194.50	603	754	235,398	22.60	42	63	38,983
4771+00.00	100.00	12.20	62	107,774	161.10	659	824	236,222	0.00	42	63	39,046
4772+00.00	100.00	30.10	78	107,852	126.20	532	665	236,887	0.00	0	0	39,046
4773+00.00	100.00	48.60	146	107,998	118.80	454	568	237,455	0.00	0	0	39,046
4774+00.00	100.00	48.20	179	108,177	118.00	439	549	238,004	0.00	0	0	39,046
4775+00.00	100.00	4.70	98	108,275	129.30	458	573	238,577	0.00	0	0	39,046
4776+00.00	100.00	4.20	16	108,291	184.10	580	725	239,302	0.00	0	0	39,046
4777+00.00	100.00	110.90	213	108,504	230.00	767	959	240,261	0.00	0	0	39,046
4778+00.00	100.00	148.40	480	108,984	228.10	848	1,060	241,321	6.30	12	18	39,064
4779+00.00	100.00	44.00	356	109,340	266.50	916	1,145	242,466	0.00	12	18	39,082
4780+00.00	100.00	0.50	82	109,422	167.70	804	1,005	243,471	0.00	0	0	39,082
4781+00.00	100.00	163.70	304	109,726	135.40	561	701	244,172	0.00	0	0	39,082
4782+00.00	100.00	603.00	1,420	111,146	124.10	481	601	244,773	0.00	0	0	39,082
4783+00.00	100.00	661.90	2,342	113,488	130.10	471	589	245,362	0.00	0	0	39,082
4784+00.00	100.00	546.00	2,237	115,725	131.00	484	605	245,967	0.00	0	0	39,082
4785+00.00	100.00	366.90	1,691	117,416	145.30	512	640	246,607	0.00	0	0	39,082
4786+00.00	100.00	15.80	709	118,125	220.40	677	846	247,453	0.00	0	0	39,082
4787+00.00	100.00	0.00	29	118,154	389.10	1,129	1,411	248,864	14.40	27	41	39,123
4787+68.00	68.00	0.00	0	118,154	383.70	973	1,216	250,080	59.90	94	141	39,264
4788+00.00	32.00	0.00	0	118,154	375.80	450	563	250,643	30.90	54	81	39,345
4789+00.00	100.00	0.60	1	118,155	255.50	1,169	1,461	252,104	0.00	57	86	39,431
4790+00.00	100.00	1.40	4	118,159	174.20	796	995	253,099	0.00	0	0	39,431
4791+00.00	100.00	3.20	9	118,168	15.40	351	439	253,538	0.00	0	0	39,431
4791+15.00	15.00	6.60	3	118,171	122.80	38	48	253,586	0.00	0	0	39,431
4792+00.00	85.00	0.10	11	118,182	157.50	441	551	254,137	0.00	0	0	39,431
4793+00.00	100.00	129.00	239	118,421	139.20	549	686	254,823	0.00	0	0	39,431
4794+00.00	100.00	242.30	688	119,109	133.20	504	630	255,453	0.00	0	0	39,431
4795+00.00	100.00	154.00	734	119,843	131.60	490	613	256,066	0.00	0	0	39,431
4796+00.00	100.00	233.10	717	120,560	131.50	487	609	256,675	0.00	0	0	39,431
4797+00.00	100.00	85.90	591	121,151	132.80	489	611	257,286	0.00	0	0	39,431
4798+00.00	100.00	77.10	302	121,453	170.50	562	703	257,989	0.00	0	0	39,431
4799+00.00	100.00	89.60	309	121,762	238.00	756	945	258,934	0.00	0	0	39,431
4800+00.00	100.00	45.00	249	122,011	257.10	917	1,146	260,080	0.00	0	0	39,431

This document was originally issued and sealed by Jeffrey T. Lansink Registration Number PE-5244,On 11/3/2015 and the original document is stored at the North Dakota Department of Transportation

Data Tables
Earthwork – Average End Area Tables

ND 23 - ND 28 to County Rd 13

STATE	PROJECT NO.	SECTION NO.	SHEET NO.
ND	SOIB-SOI-4-023(019)087	11	21

		Common Excavation - Type A			Embankment							
					Fill Above Water				Fill Below Water			
Sta	Distance	Area (Sq FT)	Volume (CY)	Accumulated Volume (CY)	Area (Sq FT)	Volume (CY)	Adjusted Volume (1.25)	Accumulated Volume (CY)	Area (Sq FT)	Volume (CY)	Adjusted Volume (1.50)	Accumulated Volume (CY)
4801+00.00	100.00	10.10	102	122,113	258.80	955	1,194	261,274	0.50	1	2	39,433
4802+00.00	100.00	13.00	43	122,156	243.90	931	1,164	262,438	36.90	69	104	39,537
4803+00.00	100.00	0.00	24	122,180	139.50	710	888	263,326	158.50	362	543	40,080
4804+00.00	100.00	0.00	0	122,180	221.40	668	835	264,161	286.30	824	1,236	41,316
4805+00.00	100.00	0.00	0	122,180	250.30	874	1,093	265,254	416.40	1,301	1,952	43,268
4806+00.00	100.00	0.00	0	122,180	283.60	989	1,236	266,490	525.00	1,743	2,615	45,883
4806+38.00	38.00	0.00	0	122,180	285.90	401	501	266,991	520.90	736	1,104	46,987
4807+00.00	62.00	0.00	0	122,180	279.60	649	811	267,802	501.20	1,174	1,761	48,748
4808+00.00	100.00	0.00	0	122,180	269.10	1,016	1,270	269,072	338.20	1,554	2,331	51,079
4809+00.00	100.00	0.00	0	122,180	220.10	906	1,133	270,205	78.60	772	1,158	52,237
4810+00.00	100.00	153.10	284	122,464	216.40	808	1,010	271,215	0.00	146	219	52,456
4811+00.00	100.00	123.10	511	122,975	186.70	746	933	272,148	0.00	0	0	52,456
4812+00.00	100.00	96.10	406	123,381	199.90	716	895	273,043	0.00	0	0	52,456
4813+00.00	100.00	172.30	497	123,878	211.80	762	953	273,996	0.00	0	0	52,456
4814+00.00	100.00	0.20	319	124,197	260.40	874	1,093	275,089	0.00	0	0	52,456
4815+00.00	100.00	0.30	1	124,198	244.20	934	1,168	276,257	0.00	0	0	52,456
4816+00.00	100.00	112.30	209	124,407	161.20	751	939	277,196	0.00	0	0	52,456
4817+00.00	100.00	56.10	312	124,719	147.20	571	714	277,910	0.00	0	0	52,456
4817+58.00	58.00	19.10	81	124,800	110.20	276	345	278,255	0.00	0	0	52,456
4818+00.00	42.00	6.70	20	124,820	113.50	174	218	278,473	0.00	0	0	52,456
4819+00.00	100.00	19.00	48	124,868	173.90	532	665	279,138	0.00	0	0	52,456
4820+00.00	100.00	0.40	36	124,904	195.10	683	854	279,992	0.00	0	0	52,456
4820+15.00	15.00	1.20	0	124,904	314.00	141	176	280,168	0.00	0	0	52,456
4821+00.00	85.00	38.20	62	124,966	150.40	731	914	281,082	0.00	0	0	52,456
4822+00.00	100.00	33.30	132	125,098	152.30	561	701	281,783	0.00	0	0	52,456
4823+00.00	100.00	31.10	119	125,217	163.20	584	730	282,513	0.00	0	0	52,456
4824+00.00	100.00	38.30	129	125,346	132.80	548	685	283,198	0.00	0	0	52,456
4825+00.00	100.00	11.20	92	125,438	141.20	507	634	283,832	0.00	0	0	52,456
4826+00.00	100.00	0.40	21	125,459	133.00	508	635	284,467	0.00	0	0	52,456
4827+00.00	100.00	0.80	2	125,461	135.20	497	621	285,088	0.00	0	0	52,456
4828+00.00	100.00	1.40	4	125,465	127.40	486	608	285,696	0.00	0	0	52,456
4829+00.00	100.00	1.40	5	125,470	117.90	454	568	286,264	0.00	0	0	52,456
4830+00.00	100.00	2.50	7	125,477	116.60	434	543	286,807	0.00	0	0	52,456
4830+79.00	79.00	16.10	27	125,504	118.20	344	430	287,237	0.00	0	0	52,456
4831+00.00	21.00	4.30	8	125,512	17.50	53	66	287,303	0.00	0	0	52,456
4832+00.00	100.00	71.20	140	125,652	137.30	287	359	287,662	0.00	0	0	52,456
4833+00.00	100.00	103.80	324	125,976	150.70	533	666	288,328	0.00	0	0	52,456
4834+00.00	100.00	3.00	198	126,174	165.10	585	731	289,059	1.90	4	6	52,462
4835+00.00	100.00	1.20	8	126,182	187.70	653	816	289,875	4.70	12	18	52,480
4836+00.00	100.00	0.40	3	126,185	191.50	702	878	290,753	37.30	78	117	52,597
4837+00.00	100.00	0.90	2	126,187	174.90	679	849	291,602	42.50	148	222	52,819
4838+00.00	100.00	2.00	5	126,192	121.70	549	686	292,288	0.00	79	119	52,938
4839+00.00	100.00	1.40	6	126,198	117.50	443	554	292,842	0.00	0	0	52,938
4840+00.00	100.00	1.90	6	126,204	121.00	442	553	293,395	0.00	0	0	52,938

This document was originally issued and sealed by Jeffrey T. Lansink Registration Number PE-5244,On 11/3/2015 and the original document is stored at the North Dakota Department of Transportation

Data Tables
Earthwork – Average End Area Tables

ND 23 - ND 28 to County Rd 13

STATE	PROJECT NO.	SECTION NO.	SHEET NO.
ND	SOIB-SOI-4-023(019)087	11	22

		Common Excavation - Type A			Embankment							
					Fill Above Water				Fill Below Water			
Sta	Distance	Area (Sq FT)	Volume (CY)	Accumulated Volume (CY)	Area (Sq FT)	Volume (CY)	Adjusted Volume (1.25)	Accumulated Volume (CY)	Area (Sq FT)	Volume (CY)	Adjusted Volume (1.50)	Accumulated Volume (CY)
4841+00.00	100.00	1.80	7	126,211	127.70	461	576	293,971	0.00	0	0	52,938
4842+00.00	100.00	1.70	6	126,217	132.10	481	601	294,572	0.00	0	0	52,938
4843+00.00	100.00	0.80	5	126,222	144.00	511	639	295,211	0.00	0	0	52,938
4843+56.00	56.00	0.50	1	126,223	161.90	317	396	295,607	8.60	9	14	52,952
4843+95.00	39.00	4.10	3	126,226	7.70	122	153	295,760	0.00	6	9	52,961
4844+00.00	5.00	4.20	1	126,227	7.90	1	1	295,761	0.00	0	0	52,961
4845+00.00	100.00	215.80	407	126,634	116.20	230	288	296,049	0.00	0	0	52,961
4846+00.00	100.00	198.60	767	127,401	115.10	428	535	296,584	0.00	0	0	52,961
4846+75.00	75.00	4.10	282	127,683	530.50	897	1,121	297,705	0.00	0	0	52,961
4847+00.00	25.00	6.40	5	127,688	103.60	294	368	298,073	0.00	0	0	52,961
4848+00.00	100.00	173.80	334	128,022	130.40	433	541	298,614	0.00	0	0	52,961
4849+00.00	100.00	70.20	452	128,474	162.10	542	678	299,292	0.00	0	0	52,961
4850+00.00	100.00	30.70	187	128,661	212.90	694	868	300,160	0.00	0	0	52,961
4851+00.00	100.00	17.00	88	128,749	285.10	922	1,153	301,313	29.20	54	81	53,042
4852+00.00	100.00	0.00	31	128,780	409.70	1,287	1,609	302,922	223.80	469	704	53,746
4853+00.00	100.00	0.00	0	128,780	484.90	1,657	2,071	304,993	527.40	1,391	2,087	55,833
4853+38.00	38.00	0.00	0	128,780	509.80	700	875	305,868	567.60	771	1,157	56,990
4854+00.00	62.00	0.00	0	128,780	540.10	1,205	1,506	307,374	584.60	1,323	1,985	58,975
4855+00.00	100.00	0.00	0	128,780	547.40	2,014	2,518	309,892	466.60	1,947	2,921	61,896
4856+00.00	100.00	0.00	0	128,780	529.60	1,994	2,493	312,385	173.10	1,185	1,778	63,674
4857+00.00	100.00	107.00	198	128,978	485.80	1,880	2,350	314,735	61.80	435	653	64,327
4858+00.00	100.00	271.50	701	129,679	407.30	1,654	2,068	316,803	5.70	125	188	64,515
4859+00.00	100.00	455.70	1,347	131,026	290.20	1,292	1,615	318,418	0.00	11	17	64,532
4860+00.00	100.00	328.90	1,453	132,479	27.60	589	736	319,154	0.00	0	0	64,532
4861+00.00	100.00	126.20	843	133,322	110.40	256	320	319,474	0.00	0	0	64,532
4861+12.00	12.00	113.70	53	133,375	113.90	50	63	319,537	0.00	0	0	64,532
4862+00.00	88.00	14.00	208	133,583	155.80	440	550	320,087	0.00	0	0	64,532
4863+00.00	100.00	117.40	243	133,826	191.50	643	804	320,891	0.00	0	0	64,532
4864+00.00	100.00	93.10	390	134,216	218.80	760	950	321,841	0.00	0	0	64,532
4865+00.00	100.00	174.80	496	134,712	211.40	797	996	322,837	0.00	0	0	64,532
4866+00.00	100.00	318.70	914	135,626	213.20	786	983	323,820	0.00	0	0	64,532
4867+00.00	100.00	525.80	1,564	137,190	190.70	748	935	324,755	0.00	0	0	64,532
4868+00.00	100.00	580.70	2,049	139,239	159.00	648	810	325,565	0.00	0	0	64,532
4869+00.00	100.00	36.50	1,143	140,382	117.50	512	640	326,205	0.00	0	0	64,532
4870+00.00	100.00	5.70	78	140,460	31.20	275	344	326,549	0.00	0	0	64,532
4870+42.00	42.00	39.70	35	140,495	19.90	40	50	326,599	0.00	0	0	64,532
4871+00.00	58.00	4.50	47	140,542	76.50	104	130	326,729	0.00	0	0	64,532
4872+00.00	100.00	2.00	12	140,554	54.80	243	304	327,033	0.00	0	0	64,532
4873+00.00	100.00	2.90	9	140,563	119.10	322	403	327,436	0.00	0	0	64,532
4874+00.00	100.00	3.30	11	140,574	213.30	616	770	328,206	0.00	0	0	64,532
4875+00.00	100.00	2.80	11	140,585	219.60	802	1,003	329,209	0.30	1	2	64,534
4875+15.00	15.00	2.70	2	140,587	239.80	128	160	329,369	6.50	2	3	64,537
4876+00.00	85.00	2.50	8	140,595	197.90	689	861	330,230	4.50	17	26	64,563
4877+00.00	100.00	2.00	8	140,603	144.20	634	793	331,023	0.00	8	12	64,575

This document was originally issued and sealed by Jeffrey T. Lansink Registration Number PE-5244,On 11/3/2015 and the original document is stored at the North Dakota Department of Transportation

Data Tables
Earthwork – Average End Area Tables

ND 23 - ND 28 to County Rd 13

STATE	PROJECT NO.	SECTION NO.	SHEET NO.
ND	SOIB-SOI-4-023(019)087	11	23

		Common Excavation - Type A			Embankment							
					Fill Above Water				Fill Below Water			
Sta	Distance	Area (Sq FT)	Volume (CY)	Accumulated Volume (CY)	Area (Sq FT)	Volume (CY)	Adjusted Volume (1.25)	Accumulated Volume (CY)	Area (Sq FT)	Volume (CY)	Adjusted Volume (1.50)	Accumulated Volume (CY)
4878+00.00	100.00	0.40	4	140,607	152.90	550	688	331,711	0.00	0	0	64,575
4879+00.00	100.00	0.20	1	140,608	137.90	539	674	332,385	0.00	0	0	64,575
4880+00.00	100.00	0.50	1	140,609	142.70	520	650	333,035	0.00	0	0	64,575
4881+00.00	100.00	77.00	144	140,753	128.20	502	628	333,663	0.00	0	0	64,575
4882+00.00	100.00	37.90	213	140,966	122.10	464	580	334,243	0.00	0	0	64,575
4883+00.00	100.00	39.30	143	141,109	122.20	452	565	334,808	0.00	0	0	64,575
4884+00.00	100.00	30.70	130	141,239	137.60	481	601	335,409	0.00	0	0	64,575
4885+00.00	100.00	39.70	130	141,369	136.20	507	634	336,043	0.00	0	0	64,575
4886+00.00	100.00	1.00	75	141,444	153.80	537	671	336,714	0.00	0	0	64,575
4887+00.00	100.00	1.00	4	141,448	154.90	572	715	337,429	0.00	0	0	64,575
4888+00.00	100.00	1.00	4	141,452	103.10	478	598	338,027	0.00	0	0	64,575
4888+34.00	34.00	3.30	3	141,455	200.30	191	239	338,266	0.00	0	0	64,575
4889+00.00	66.00	1.70	6	141,461	151.60	430	538	338,804	0.00	0	0	64,575
4890+00.00	100.00	2.60	8	141,469	116.20	496	620	339,424	0.00	0	0	64,575
4891+00.00	100.00	23.70	49	141,518	110.20	419	524	339,948	0.00	0	0	64,575
4892+00.00	100.00	28.60	97	141,615	115.60	418	523	340,471	0.00	0	0	64,575
4893+00.00	100.00	50.50	146	141,761	114.40	426	533	341,004	0.00	0	0	64,575
4894+00.00	100.00	92.30	264	142,025	114.00	423	529	341,533	0.00	0	0	64,575
4895+00.00	100.00	146.00	441	142,466	104.70	405	506	342,039	0.00	0	0	64,575
4896+00.00	100.00	131.00	513	142,979	105.80	390	488	342,527	0.00	0	0	64,575
4897+00.00	100.00	59.50	353	143,332	124.40	426	533	343,060	0.00	0	0	64,575
4898+00.00	100.00	48.70	200	143,532	130.40	472	590	343,650	0.00	0	0	64,575
4899+00.00	100.00	68.10	216	143,748	147.80	515	644	344,294	0.00	0	0	64,575
4900+00.00	100.00	77.20	269	144,017	192.70	631	789	345,083	0.00	0	0	64,575
4901+00.00	100.00	45.00	226	144,243	187.90	705	881	345,964	0.00	0	0	64,575
4902+00.00	100.00	2.40	88	144,331	176.60	675	844	346,808	0.10	0	0	64,575
4903+00.00	100.00	3.90	12	144,343	211.70	719	899	347,707	9.30	17	26	64,601
4903+15.00	15.00	4.20	2	144,345	215.90	119	149	347,856	8.60	5	8	64,609
4904+00.00	85.00	2.80	11	144,356	169.00	606	758	348,614	5.50	22	33	64,642
4905+00.00	100.00	119.00	226	144,582	134.80	563	704	349,318	0.00	10	15	64,657
4906+00.00	100.00	253.50	690	145,272	101.10	437	546	349,864	0.00	0	0	64,657
4907+00.00	100.00	161.90	769	146,041	61.40	301	376	350,240	0.00	0	0	64,657
4908+00.00	100.00	144.50	567	146,608	124.50	344	430	350,670	0.00	0	0	64,657
4909+00.00	100.00	148.50	543	147,151	119.70	452	565	351,235	0.00	0	0	64,657
4910+00.00	100.00	183.60	615	147,766	130.50	463	579	351,814	0.00	0	0	64,657
4911+00.00	100.00	197.80	706	148,472	129.80	482	603	352,417	0.00	0	0	64,657
4912+00.00	100.00	133.60	614	149,086	66.10	363	454	352,871	0.00	0	0	64,657
4913+00.00	100.00	70.30	378	149,464	148.30	397	496	353,367	0.00	0	0	64,657
4914+00.00	100.00	0.10	130	149,594	280.80	795	994	354,361	0.00	0	0	64,657
4915+00.00	100.00	0.00	0	149,594	343.00	1,155	1,444	355,805	2.30	4	6	64,663
4915+86.00	86.00	0.00	0	149,594	386.00	1,161	1,451	357,256	0.00	4	6	64,669
4916+00.00	14.00	0.00	0	149,594	334.60	187	234	357,490	0.00	0	0	64,669
4917+00.00	100.00	85.10	158	149,752	159.30	915	1,144	358,634	0.00	0	0	64,669
4918+00.00	100.00	192.40	514	150,266	117.10	512	640	359,274	0.00	0	0	64,669

This document was originally issued and sealed by Jeffrey T. Lansink Registration Number PE-5244,On 11/3/2015 and the original document is stored at the North Dakota Department of Transportation

Data Tables
Earthwork – Average End Area Tables

ND 23 - ND 28 to County Rd 13

STATE	PROJECT NO.	SECTION NO.	SHEET NO.
ND	SOIB-SOI-4-023(019)087	11	24

		Common Excavation - Type A			Embankment							
					Fill Above Water				Fill Below Water			
Sta	Distance	Area (Sq FT)	Volume (CY)	Accumulated Volume (CY)	Area (Sq FT)	Volume (CY)	Adjusted Volume (1.25)	Accumulated Volume (CY)	Area (Sq FT)	Volume (CY)	Adjusted Volume (1.50)	Accumulated Volume (CY)
4919+00.00	100.00	269.00	854	151,120	59.60	327	409	359,683	0.00	0	0	64,669
4920+00.00	100.00	230.50	925	152,045	117.30	328	410	360,093	0.00	0	0	64,669
4921+00.00	100.00	57.10	533	152,578	119.80	439	549	360,642	0.00	0	0	64,669
4922+00.00	100.00	2.30	110	152,688	143.30	487	609	361,251	0.00	0	0	64,669
4923+00.00	100.00	5.70	15	152,703	12.00	288	360	361,611	0.00	0	0	64,669
4923+27.00	27.00	20.10	13	152,716	195.90	104	130	361,741	0.00	0	0	64,669
4924+00.00	73.00	3.40	32	152,748	155.00	474	593	362,334	0.00	0	0	64,669
4925+00.00	100.00	96.10	184	152,932	164.70	592	740	363,074	0.00	0	0	64,669
4926+00.00	100.00	4.10	186	153,118	155.00	592	740	363,814	0.00	0	0	64,669
4927+00.00	100.00	4.50	16	153,134	137.30	541	676	364,490	0.00	0	0	64,669
4928+00.00	100.00	3.40	15	153,149	145.30	523	654	365,144	0.00	0	0	64,669
4928+16.00	16.00	3.00	2	153,151	154.90	89	111	365,255	0.00	0	0	64,669
4929+00.00	84.00	4.50	12	153,163	137.50	455	569	365,824	1.20	2	3	64,672
4930+00.00	100.00	5.10	18	153,181	123.20	483	604	366,428	1.50	5	8	64,680
4931+00.00	100.00	3.60	16	153,197	116.10	443	554	366,982	2.80	8	12	64,692
4932+00.00	100.00	3.10	12	153,209	125.30	447	559	367,541	7.20	19	29	64,721
4933+00.00	100.00	2.10	10	153,219	86.60	392	490	368,031	0.00	13	20	64,741
4933+40.00	40.00	11.80	10	153,229	130.10	161	201	368,232	0.00	0	0	64,741
4934+00.00	60.00	2.50	16	153,245	113.10	270	338	368,570	12.80	14	21	64,762
4935+00.00	100.00	1.20	7	153,252	128.70	448	560	369,130	19.10	59	89	64,851
4936+00.00	100.00	1.70	5	153,257	121.30	463	579	369,709	11.30	56	84	64,935
4936+22.78	22.78	1.50	1	153,258	123.60	103	129	369,838	15.30	11	17	64,952
4936+92.95	70.17	0.40	2	153,260	144.00	348	435	370,273	20.50	47	71	65,023
4937+00.00	7.05	0.50	0	153,260	146.30	38	48	370,321	18.30	5	8	65,031
4937+63.12	63.12	0.80	2	153,262	152.40	349	436	370,757	8.10	31	47	65,078
4938+00.00	36.88	1.30	1	153,263	127.70	191	239	370,996	0.00	6	9	65,087
4938+29.95	29.95	1.90	2	153,265	117.80	136	170	371,166	0.00	0	0	65,087
4939+00.00	70.05	2.50	6	153,271	111.70	298	373	371,539	0.00	0	0	65,087
4940+00.00	100.00	3.70	11	153,282	103.70	399	499	372,038	0.00	0	0	65,087
4941+00.00	100.00	3.50	13	153,295	101.80	381	476	372,514	0.00	0	0	65,087
4942+00.00	100.00	2.90	12	153,307	104.40	382	478	372,992	0.00	0	0	65,087
4943+00.00	100.00	3.50	12	153,319	104.70	387	484	373,476	0.00	0	0	65,087
4944+00.00	100.00	2.70	11	153,330	103.00	385	481	373,957	0.00	0	0	65,087
4945+00.00	100.00	0.80	6	153,336	124.70	422	528	374,485	0.00	0	0	65,087
4946+00.00	100.00	1.30	4	153,340	116.00	446	558	375,043	0.00	0	0	65,087
4947+00.00	100.00	0.80	4	153,344	116.40	430	538	375,581	0.00	0	0	65,087
4947+58.00	58.00	2.10	3	153,347	220.90	362	453	376,034	0.00	0	0	65,087
4948+00.00	42.00	0.70	2	153,349	104.10	253	316	376,350	0.00	0	0	65,087
4949+00.00	100.00	1.90	5	153,354	111.40	399	499	376,849	0.00	0	0	65,087
4949+81.00	81.00	5.50	11	153,365	105.50	325	406	377,255	0.00	0	0	65,087
4950+00.00	19.00	4.20	3	153,368	51.50	55	69	377,324	0.00	0	0	65,087
4951+00.00	100.00	1.10	10	153,378	126.50	330	413	377,737	0.00	0	0	65,087
4952+00.00	100.00	1.90	6	153,384	99.30	418	523	378,260	0.00	0	0	65,087
4953+00.00	100.00	1.60	6	153,390	103.00	375	469	378,729	0.00	0	0	65,087

This document was originally issued and sealed by Jeffrey T. Lansink Registration Number PE-5244,On 11/3/2015 and the original document is stored at the North Dakota Department of Transportation

Data Tables
Earthwork – Average End Area Tables

ND 23 - ND 28 to County Rd 13

STATE	PROJECT NO.	SECTION NO.	SHEET NO.
ND	SOIB-SOI-4-023(019)087	11	25

		Common Excavation - Type A			Embankment							
					Fill Above Water				Fill Below Water			
Sta	Distance	Area (Sq FT)	Volume (CY)	Accumulated Volume (CY)	Area (Sq FT)	Volume (CY)	Adjusted Volume (1.25)	Accumulated Volume (CY)	Area (Sq FT)	Volume (CY)	Adjusted Volume (1.50)	Accumulated Volume (CY)
4954+00.00	100.00	2.00	7	153,397	109.70	394	493	379,222	0.00	0	0	65,087
4955+00.00	100.00	2.40	8	153,405	104.80	397	496	379,718	0.00	0	0	65,087
4956+00.00	100.00	2.30	9	153,414	114.10	405	506	380,224	0.00	0	0	65,087
4957+00.00	100.00	1.50	7	153,421	226.30	630	788	381,012	0.00	0	0	65,087
4957+36.00	36.00	2.00	2	153,423	264.30	327	409	381,421	0.00	0	0	65,087
4958+00.00	64.00	2.60	5	153,428	120.60	456	570	381,991	0.00	0	0	65,087
4959+00.00	100.00	3.90	12	153,440	86.20	383	479	382,470	0.00	0	0	65,087
4960+00.00	100.00	1.20	9	153,449	108.50	361	451	382,921	0.00	0	0	65,087
4961+00.00	100.00	1.90	6	153,455	105.00	395	494	383,415	0.00	0	0	65,087
4962+00.00	100.00	22.90	46	153,501	112.20	402	503	383,918	0.00	0	0	65,087
4963+00.00	100.00	63.90	161	153,662	108.00	408	510	384,428	0.00	0	0	65,087
4964+00.00	100.00	48.70	209	153,871	108.20	400	500	384,928	0.00	0	0	65,087
4964+28.38	28.38	53.60	54	153,925	125.10	123	154	385,082	0.00	0	0	65,087
4964+95.21	66.83	62.50	144	154,069	120.90	304	380	385,462	0.00	0	0	65,087
4965+00.00	4.79	62.80	11	154,080	121.50	22	28	385,490	0.00	0	0	65,087
4965+65.38	65.38	55.30	143	154,223	113.60	285	356	385,846	0.00	0	0	65,087
4966+00.00	34.62	70.60	81	154,304	118.50	149	186	386,032	0.00	0	0	65,087
4966+35.55	35.55	71.10	93	154,397	115.70	154	193	386,225	0.00	0	0	65,087
4967+00.00	64.45	49.20	144	154,541	175.90	348	435	386,660	0.00	0	0	65,087
4968+00.00	100.00	1.40	94	154,635	262.10	811	1,014	387,674	10.60	20	30	65,117
4968+66.00	66.00	0.10	2	154,637	291.30	676	845	388,519	41.70	64	96	65,213
4969+00.00	34.00	0.40	0	154,637	275.70	357	446	388,965	15.50	36	54	65,267
4970+00.00	100.00	1.60	4	154,641	231.00	938	1,173	390,138	4.10	36	54	65,321
4971+00.00	100.00	3.40	9	154,650	101.00	615	769	390,907	0.00	8	12	65,333
4971+16.00	16.00	6.00	3	154,653	171.40	81	101	391,008	0.00	0	0	65,333
4972+00.00	84.00	1.70	12	154,665	103.50	428	535	391,543	0.00	0	0	65,333
4973+00.00	100.00	16.90	34	154,699	111.20	398	498	392,041	0.00	0	0	65,333
4974+00.00	100.00	40.70	107	154,806	116.80	422	528	392,569	0.00	0	0	65,333
4975+00.00	100.00	20.40	113	154,919	111.30	422	528	393,097	0.10	0	0	65,333
4976+00.00	100.00	38.60	109	155,028	113.70	417	521	393,618	0.00	0	0	65,333
4977+00.00	100.00	40.60	147	155,175	127.20	446	558	394,176	0.00	0	0	65,333
4978+00.00	100.00	7.80	90	155,265	136.60	489	611	394,787	0.00	0	0	65,333
4979+00.00	100.00	1.50	17	155,282	122.80	480	600	395,387	0.00	0	0	65,333
4980+00.00	100.00	0.90	4	155,286	137.50	482	603	395,990	0.00	0	0	65,333
4981+00.00	100.00	0.80	3	155,289	121.20	479	599	396,589	0.00	0	0	65,333
4982+00.00	100.00	1.40	4	155,293	63.90	343	429	397,018	0.00	0	0	65,333
4982+30.00	30.00	8.70	6	155,299	50.70	64	80	397,098	0.00	0	0	65,333
4982+70.00	40.00	20.10	21	155,320	323.00	277	346	397,444	0.00	0	0	65,333
4983+00.00	30.00	20.40	23	155,343	231.90	308	385	397,829	0.00	0	0	65,333
4984+00.00	100.00	1.50	41	155,384	119.10	650	813	398,642	0.00	0	0	65,333
4985+00.00	100.00	0.70	4	155,388	127.20	456	570	399,212	0.00	0	0	65,333
4985+29.27	29.27	0.80	1	155,389	122.90	136	170	399,382	0.00	0	0	65,333
4986+00.00	70.73	1.30	3	155,392	122.50	321	401	399,783	0.00	0	0	65,333
4986+71.64	71.64	13.50	20	155,412	138.60	346	433	400,216	0.00	0	0	65,333

This document was originally issued and sealed by Jeffrey T. Lansink Registration Number PE-5244,On 11/3/2015 and the original document is stored at the North Dakota Department of Transportation

Data Tables
Earthwork – Average End Area Tables

ND 23 - ND 28 to County Rd 13

STATE	PROJECT NO.	SECTION NO.	SHEET NO.
ND	SOIB-SOI-4-023(019)087	11	26

		Common Excavation - Type A			Embankment							
					Fill Above Water				Fill Below Water			
Sta	Distance	Area (Sq FT)	Volume (CY)	Accumulated Volume (CY)	Area (Sq FT)	Volume (CY)	Adjusted Volume (1.25)	Accumulated Volume (CY)	Area (Sq FT)	Volume (CY)	Adjusted Volume (1.50)	Accumulated Volume (CY)
4987+00.00	28.36	35.20	26	155,438	141.20	147	184	400,400	0.00	0	0	65,333
4988+00.00	100.00	40.70	141	155,579	122.50	488	610	401,010	0.00	0	0	65,333
4988+14.01	14.01	40.70	21	155,600	118.60	63	79	401,089	0.00	0	0	65,333
4989+00.00	85.99	60.80	162	155,762	123.60	386	483	401,572	0.00	0	0	65,333
4990+00.00	100.00	52.80	210	155,972	101.40	417	521	402,093	0.00	0	0	65,333
4990+71.64	71.64	54.40	142	156,114	49.80	201	251	402,344	0.00	0	0	65,333
4991+00.00	28.36	53.00	56	156,170	43.70	49	61	402,405	0.00	0	0	65,333
4992+00.00	100.00	45.70	183	156,353	238.40	522	653	403,058	0.00	0	0	65,333
4993+00.00	100.00	3.30	91	156,444	279.20	959	1,199	404,257	0.00	0	0	65,333
4994+00.00	100.00	0.50	7	156,451	292.90	1,059	1,324	405,581	13.00	24	36	65,369
4995+00.00	100.00	0.00	1	156,452	340.90	1,174	1,468	407,049	15.30	52	78	65,447
4995+16.00	16.00	0.00	0	156,452	343.30	203	254	407,303	19.80	10	15	65,462
4996+00.00	84.00	0.00	0	156,452	369.60	1,109	1,386	408,689	4.10	37	56	65,518
4997+00.00	100.00	0.00	0	156,452	434.20	1,489	1,861	410,550	1.50	10	15	65,533
4998+00.00	100.00	0.00	0	156,452	516.80	1,761	2,201	412,751	0.00	3	5	65,538
4998+65.00	65.00	0.20	0	156,452	578.90	1,319	1,649	414,400	0.00	0	0	65,538
4999+00.00	35.00	0.00	0	156,452	447.70	665	831	415,231	0.00	0	0	65,538
5000+00.00	100.00	10.80	20	156,472	554.90	1,857	2,321	417,552	0.00	0	0	65,538
5001+00.00	100.00	8.60	36	156,508	600.20	2,139	2,674	420,226	0.00	0	0	65,538
5002+00.00	100.00	0.00	16	156,524	702.40	2,412	3,015	423,241	0.00	0	0	65,538
5003+00.00	100.00	0.00	0	156,524	739.80	2,671	3,339	426,580	4.90	9	14	65,552
5004+00.00	100.00	0.00	0	156,524	763.20	2,783	3,479	430,059	43.80	90	135	65,687
5004+16.00	16.00	0.00	0	156,524	778.90	457	571	430,630	44.70	26	39	65,726
5005+00.00	84.00	0.00	0	156,524	766.80	2,404	3,005	433,635	27.20	112	168	65,894
5006+00.00	100.00	8.20	15	156,539	685.80	2,690	3,363	436,998	6.00	61	92	65,986
5007+00.00	100.00	103.80	207	156,746	563.30	2,313	2,891	439,889	0.00	11	17	66,003
5008+00.00	100.00	181.80	529	157,275	543.10	2,049	2,561	442,450	0.00	0	0	66,003
5009+00.00	100.00	264.40	826	158,101	791.50	2,471	3,089	445,539	0.00	0	0	66,003
5010+00.00	100.00	245.10	944	159,045	506.50	2,404	3,005	448,544	0.00	0	0	66,003
5011+00.00	100.00	139.60	712	159,757	511.50	1,885	2,356	450,900	0.00	0	0	66,003
5012+00.00	100.00	126.50	493	160,250	530.80	1,930	2,413	453,313	0.00	0	0	66,003
5013+00.00	100.00	77.60	378	160,628	541.20	1,985	2,481	455,794	0.00	0	0	66,003
5013+80.00	80.00	21.90	147	160,775	1,090.20	2,417	3,021	458,815	0.00	0	0	66,003
5013+89.48	9.48	20.90	8	160,783	1,234.50	408	510	459,325	0.00	0	0	66,003
5014+00.00	10.52	17.00	7	160,790	1,278.90	490	613	459,938	0.00	0	0	66,003
5015+00.00	100.00	0.00	31	160,821	700.70	3,666	4,583	464,521	0.00	0	0	66,003
5016+00.00	100.00	0.00	0	160,821	859.30	2,889	3,611	468,132	0.60	1	2	66,005
5016+29.00	29.00	0.00	0	160,821	926.50	959	1,199	469,331	17.80	10	15	66,020
5016+47.10	18.10	0.00	0	160,821	877.60	605	756	470,087	17.30	12	18	66,038
5017+00.00	52.90	0.00	0	160,821	916.70	1,758	2,198	472,285	33.80	50	75	66,113
5017+89.48	89.48	0.00	0	160,821	986.70	3,154	3,943	476,228	85.70	198	297	66,410
5018+00.00	10.52	0.00	0	160,821	993.20	386	483	476,711	96.30	35	53	66,463
5019+00.00	100.00	0.00	0	160,821	1,020.80	3,730	4,663	481,374	206.10	560	840	67,303
5019+31.85	31.85	0.00	0	160,821	1,029.00	1,209	1,511	482,885	228.30	256	384	67,687

This document was originally issued and sealed by Jeffrey T. Lansink Registration Number PE-5244,On 11/3/2015 and the original document is stored at the North Dakota Department of Transportation

Data Tables
Earthwork – Average End Area Tables

ND 23 - ND 28 to County Rd 13

STATE	PROJECT NO.	SECTION NO.	SHEET NO.
ND	SOIB-SOI-4-023(019)087	11	27

		Common Excavation - Type A			Embankment							
					Fill Above Water				Fill Below Water			
Sta	Distance	Area (Sq FT)	Volume (CY)	Accumulated Volume (CY)	Area (Sq FT)	Volume (CY)	Adjusted Volume (1.25)	Accumulated Volume (CY)	Area (Sq FT)	Volume (CY)	Adjusted Volume (1.50)	Accumulated Volume (CY)
5020+00.00	68.15	0.00	0	160,821	1,060.60	2,637	3,296	486,181	265.80	624	936	68,623
5020+28.00	28.00	0.00	0	160,821	1,071.10	1,105	1,381	487,562	284.30	285	428	69,051
5021+00.00	72.00	0.00	0	160,821	1,108.10	2,906	3,633	491,195	324.90	812	1,218	70,269
5022+00.00	100.00	0.00	0	160,821	1,118.00	4,122	5,153	496,348	326.60	1,206	1,809	72,078
5023+00.00	100.00	0.00	0	160,821	1,090.40	4,090	5,113	501,461	280.10	1,124	1,686	73,764
5024+00.00	100.00	3.10	6	160,827	1,037.20	3,940	4,925	506,386	187.90	867	1,301	75,065
5025+00.00	100.00	32.60	66	160,893	886.10	3,562	4,453	510,839	97.80	529	794	75,859
5026+00.00	100.00	52.50	158	161,051	664.70	2,872	3,590	514,429	0.00	181	272	76,131
5027+00.00	100.00	74.60	235	161,286	424.20	2,016	2,520	516,949	0.00	0	0	76,131
5028+00.00	100.00	82.20	290	161,576	253.40	1,255	1,569	518,518	0.00	0	0	76,131
5029+00.00	100.00	9.70	170	161,746	192.10	825	1,031	519,549	0.00	0	0	76,131
5030+00.00	100.00	41.00	94	161,840	171.40	673	841	520,390	0.00	0	0	76,131
5031+00.00	100.00	52.40	173	162,013	116.80	534	668	521,058	0.00	0	0	76,131
5032+00.00	100.00	75.00	236	162,249	118.50	436	545	521,603	0.00	0	0	76,131
5033+00.00	100.00	104.20	332	162,581	125.50	452	565	522,168	0.00	0	0	76,131
5034+00.00	100.00	112.80	402	162,983	136.50	485	606	522,774	0.00	0	0	76,131
5035+00.00	100.00	103.40	400	163,383	124.00	482	603	523,377	0.00	0	0	76,131
5036+00.00	100.00	4.20	199	163,582	43.20	310	388	523,765	0.00	0	0	76,131
5036+30.00	30.00	16.40	11	163,593	128.00	95	119	523,884	0.00	0	0	76,131
5037+00.00	70.00	2.20	24	163,617	106.70	304	380	524,264	0.00	0	0	76,131
5037+10.25	10.25	2.30	1	163,618	109.10	41	51	524,315	0.00	0	0	76,131
5037+80.43	70.18	2.30	6	163,624	115.00	291	364	524,679	0.00	0	0	76,131
5038+00.00	19.57	3.00	2	163,626	112.00	82	103	524,782	0.00	0	0	76,131
5038+50.60	50.60	2.50	5	163,631	114.20	212	265	525,047	0.00	0	0	76,131
5039+00.00	49.40	3.40	5	163,636	105.30	201	251	525,298	0.00	0	0	76,131
5039+17.43	17.43	11.20	5	163,641	97.80	66	83	525,381	0.00	0	0	76,131
5040+00.00	82.57	25.10	56	163,697	94.90	295	369	525,750	0.00	0	0	76,131
5041+00.00	100.00	38.50	118	163,815	153.30	460	575	526,325	0.00	0	0	76,131
5042+00.00	100.00	6.70	84	163,899	240.70	730	913	527,238	3.20	6	9	76,140
5043+00.00	100.00	0.10	13	163,912	284.60	973	1,216	528,454	7.00	19	29	76,169
5044+00.00	100.00	0.30	1	163,913	281.40	1,048	1,310	529,764	7.70	27	41	76,210
5044+28.00	28.00	0.20	0	163,913	276.80	289	361	530,125	4.00	6	9	76,219
5045+00.00	72.00	0.30	1	163,914	272.70	733	916	531,041	0.10	5	8	76,227
5046+00.00	100.00	13.70	26	163,940	1.20	507	634	531,675	0.00	0	0	76,227
5046+45.00	45.00	4.30	15	163,955	648.10	541	676	532,351	0.00	0	0	76,227
5047+00.00	55.00	1.10	6	163,961	68.80	730	913	533,264	0.00	0	0	76,227
5048+00.00	100.00	19.50	38	163,999	143.50	393	491	533,755	0.00	0	0	76,227
5049+00.00	100.00	46.80	123	164,122	155.70	554	693	534,448	0.00	0	0	76,227
5050+00.00	100.00	32.30	146	164,268	155.00	575	719	535,167	0.00	0	0	76,227
5051+00.00	100.00	79.20	206	164,474	197.10	652	815	535,982	0.00	0	0	76,227
5052+00.00	100.00	105.90	343	164,817	143.50	631	789	536,771	0.00	0	0	76,227
5053+00.00	100.00	63.10	313	165,130	110.20	470	588	537,359	0.00	0	0	76,227
5054+00.00	100.00	52.10	213	165,343	118.50	424	530	537,889	0.00	0	0	76,227
5055+00.00	100.00	57.60	203	165,546	109.60	422	528	538,417	0.00	0	0	76,227

This document was originally issued and sealed by Jeffrey T. Lansink Registration Number PE-5244,On 11/3/2015 and the original document is stored at the North Dakota Department of Transportation

Data Tables
Earthwork – Average End Area Tables

ND 23 - ND 28 to County Rd 13

STATE	PROJECT NO.	SECTION NO.	SHEET NO.
ND	SOIB-SOI-4-023(019)087	11	28

		Common Excavation - Type A			Embankment							
					Fill Above Water				Fill Below Water			
Sta	Distance	Area (Sq FT)	Volume (CY)	Accumulated Volume (CY)	Area (Sq FT)	Volume (CY)	Adjusted Volume (1.25)	Accumulated Volume (CY)	Area (Sq FT)	Volume (CY)	Adjusted Volume (1.50)	Accumulated Volume (CY)
5056+00.00	100.00	36.50	174	165,720	96.90	382	478	538,895	0.00	0	0	76,227
5057+00.00	100.00	32.50	128	165,848	87.30	341	426	539,321	0.00	0	0	76,227
5058+00.00	100.00	45.90	145	165,993	80.80	311	389	539,710	0.00	0	0	76,227
5059+00.00	100.00	32.50	145	166,138	66.90	274	343	540,053	0.00	0	0	76,227
5060+00.00	100.00	45.50	144	166,282	73.10	259	324	540,377	0.00	0	0	76,227
5061+00.00	100.00	5.10	94	166,376	77.00	278	348	540,725	0.00	0	0	76,227
5061+50.00	50.00	3.20	8	166,384	287.10	337	421	541,146	0.00	0	0	76,227
5062+00.00	50.00	2.50	5	166,389	105.90	364	455	541,601	0.00	0	0	76,227
5063+00.00	100.00	4.30	13	166,402	73.40	332	415	542,016	0.00	0	0	76,227
5064+00.00	100.00	2.70	13	166,415	90.20	303	379	542,395	18.10	34	51	76,278
5065+00.00	100.00	1.10	7	166,422	110.70	372	465	542,860	24.60	79	119	76,397
5065+71.56	71.56	0.80	3	166,425	115.60	300	375	543,235	48.80	97	146	76,543
5066+00.00	28.44	0.70	1	166,426	111.90	120	150	543,385	51.40	53	80	76,623
5066+38.39	38.39	0.80	1	166,427	104.90	154	193	543,578	47.50	70	105	76,728
5067+00.00	61.61	1.40	3	166,430	96.40	230	288	543,866	48.80	110	165	76,893
5067+08.56	8.56	1.50	0	166,430	95.80	30	38	543,904	49.70	16	24	76,917
5067+78.73	70.17	1.90	4	166,434	83.50	233	291	544,195	42.20	119	179	77,096
5068+00.00	21.27	2.00	2	166,436	81.80	65	81	544,276	34.70	30	45	77,141
5069+00.00	100.00	3.00	9	166,445	84.90	309	386	544,662	29.50	119	179	77,320
5070+00.00	100.00	1.40	8	166,453	96.40	336	420	545,082	6.90	67	101	77,421
5071+00.00	100.00	1.50	5	166,458	93.10	351	439	545,521	2.50	17	26	77,447
Totals				**166,458**				**545,521**				**77,447**

This document was originally issued and sealed by Jeffrey T. Lansink Registration Number PE-5244,On 11/3/2015 and the original document is stored at the North Dakota Department of Transportation

Data Tables
Earthwork – Average End Area Tables

ND 23 - ND 28 to County Rd 13

STATE	PROJECT NO.	SECTION NO.	SHEET NO.
ND	SOIB-SOI-4-023(019)087	11	29

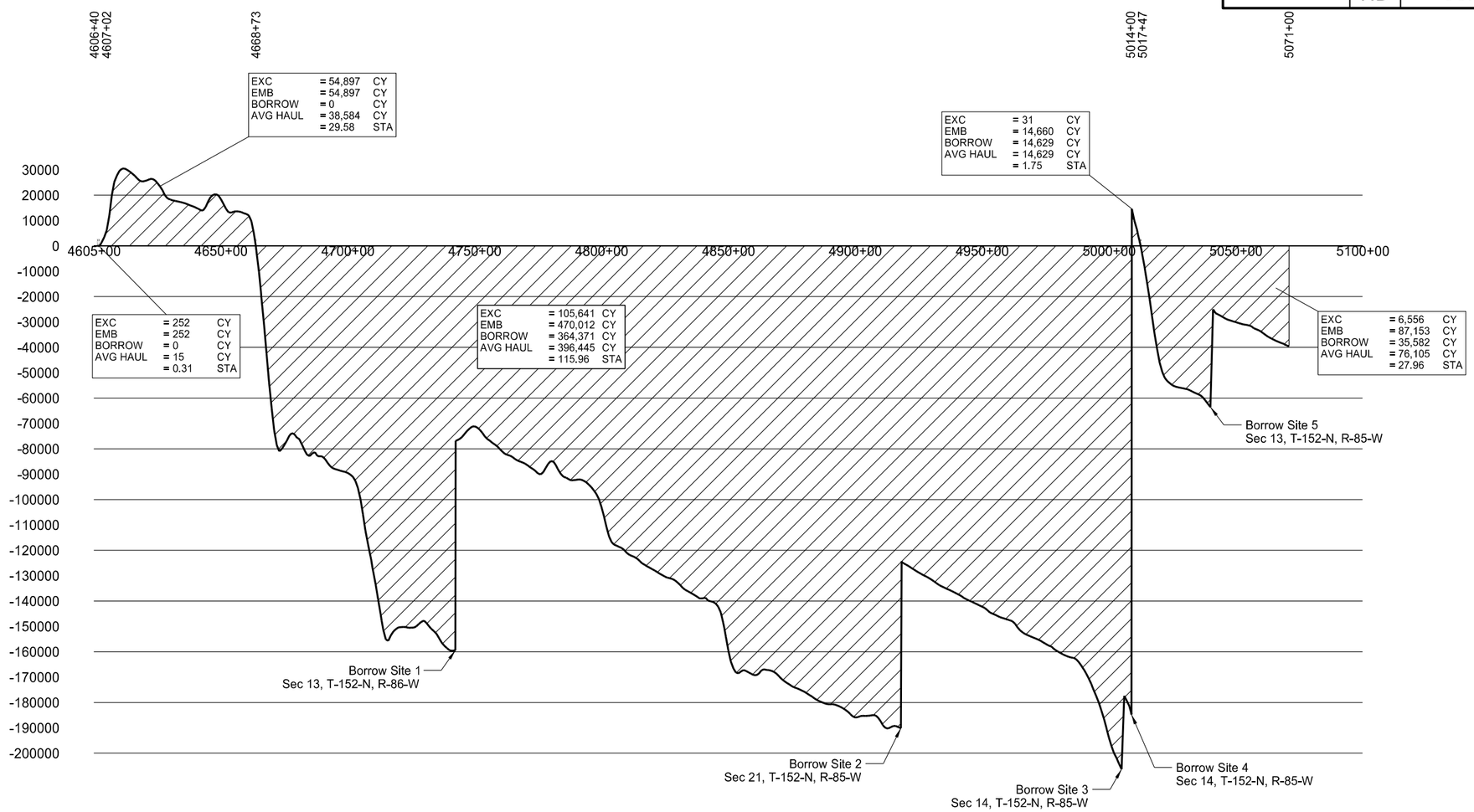

PROJECT TOTALS

EXC	= 167,377	CY
EMB	= 626,974	CY
BORROW	= 414,582	CY
AVG HAUL	= 522,448	CY
	= 175.56	STA

This document was originally issued and sealed by Jeffrey T. Lansink Registration Number PE- 5244, on 11/3/15 and the original document is stored at the North Dakota Department of Transportation

Mass Diagram

ND 23 - ND 28 to County Rd 13

STATE	PROJECT NO.	SECTION NO.	SHEET NO.
ND	SOIB-SOI-4-023(019)087	11	30

C590

PI Station	=	4951+87.58
Delta	=	40° 19' 58" (LT)
Degree	=	1° 30' 0"
Radius	=	3,819.72'
Length	=	2,688.85'

Station	Left Slope ('/')	Right Slope ('/')
4936+22.78	-0.0210	-0.0210
4936+92.95	-0.0210	0.0000
4937+63.12	-0.0210	0.0210
4938+29.95	-0.0410	0.0410
4964+28.38	-0.0410	0.0410
4964+95.21	-0.0210	0.0210
4965+65.38	-0.0210	0.0000
4966+35.55	-0.0210	-0.0210

SEC_4982+50V3-2

PI Station	=	6+04.12
Delta	=	47° 10' 09" (LT)
Degree	=	19° 05' 55"
Radius	=	300.00
Length	=	246.9767'

Station	Left Slope ('/')	Right Slope ('/')
03+72.29	-0.0210	-0.0210
04+10.33	0.0000	-0.0210
04+48.37	0.0210	-0.0210
05+15.02	0.0578	-0.0578
06+28.25	0.0578	-0.0578
06+71.20	0.0210	-0.0210
06+95.71	0.0000	-0.0210
07+20.22	-0.0210	-0.0210

SEC_5046+50V2-2

PI Station	=	7+73.03
Delta	=	64° 17' 45" (LT)
Degree	=	19° 05' 55"
Radius	=	300.00
Length	=	336.6518'

Station	Left Slope ('/')	Right Slope ('/')
04+76.65	-0.0210	-0.0210
05+14.69	-0.0210	0.0000
05+52.73	-0.0210	0.0210
06+19.39	-0.0578	0.0578
07+86.77	-0.0578	0.0578
08+53.42	-0.0210	0.0210
08+91.46	-0.0210	0.0000
09+29.50	-0.0210	-0.0210

SCS657

PI Station	=	5005+21.23
Delta	=	81° 32' 06" (RT)
Degree	=	3° 00' 00"
Radius	=	1,909.86'
Length	=	2,317.84'

Station	Left Slope ('/')	Right Slope ('/')
4985+29.27	-0.0210	-0.0210
4986+71.64	0.0000	-0.0210
4990+71.64	0.0590	-0.0590
5013+89.48	0.0590	-0.0590
5017+89.48	0.0000	-0.0210
5019+31.85	-0.0210	-0.0210

SEC_4982+50V3-3

PI Station	=	7+91.76
Delta	=	26° 27' 48" (LT)
Degree	=	18° 48' 27"
Radius	=	304.64
Length	=	140.7069'

Station	Left Slope ('/')	Right Slope ('/')
07+20.22	-0.0210	-0.0210
07+44.72	-0.0210	0.0000
07+69.21	-0.0210	0.0210
08+11.86	-0.0576	0.0576
08+19.10	-0.0576	0.0576
08+85.37	-0.0210	0.0210
09+23.43	-0.0210	0.0000
09+61.50	-0.0210	-0.0210

SEC_5046+50V2-3

PI Station	=	10+32.23
Delta	=	34° 55' 29" (LT)
Degree	=	19° 05' 55"
Radius	=	300.00
Length	=	182.8659'

Station	Left Slope ('/')	Right Slope ('/')
09+29.50	-0.0210	-0.0210
09+67.54	0.0000	-0.0210
10+05.58	0.0210	-0.0210
10+72.23	0.0578	-0.0578
10+85.83	0.0578	-0.0578
11+52.48	0.0210	-0.0210
11+90.52	0.0000	-0.0210
12+28.56	-0.0210	-0.0210

C407

PI Station	=	5053+06.75
Delta	=	41° 10' 06" (LT)
Degree	=	1° 30' 00"
Radius	=	3,819.72'
Length	=	2,744.55'

Station	Left Slope ('/')	Right Slope ('/')
5037+10.25	-0.0210	-0.0210
5037+80.43	-0.0210	0.0000
5038+50.60	-0.0210	0.0210
5039+17.43	-0.0410	0.0410
5065+71.56	-0.0410	0.0410
5066+38.39	-0.0210	0.0210
5067+08.56	-0.0210	0.0000
5067+78.73	-0.0210	-0.0210

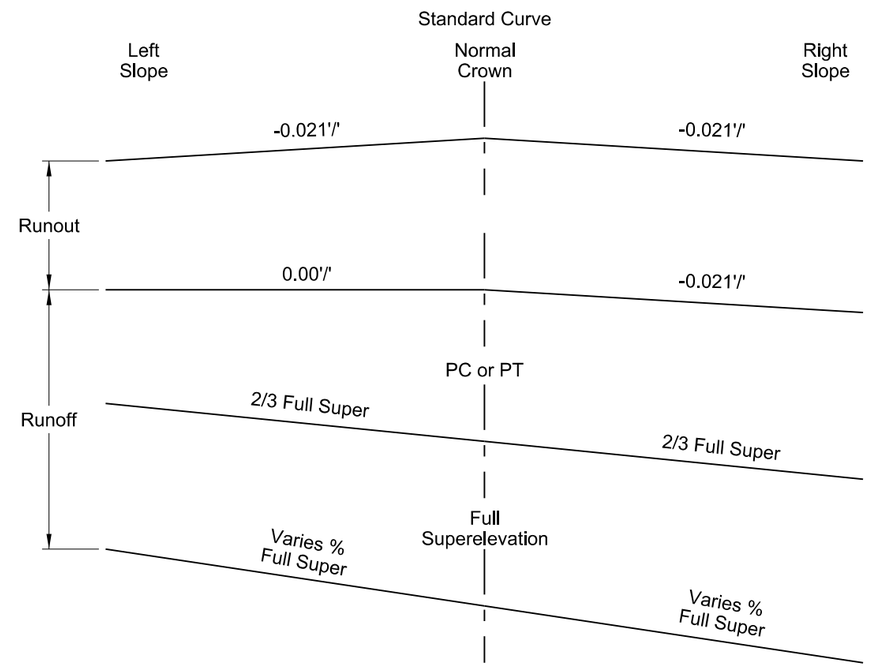

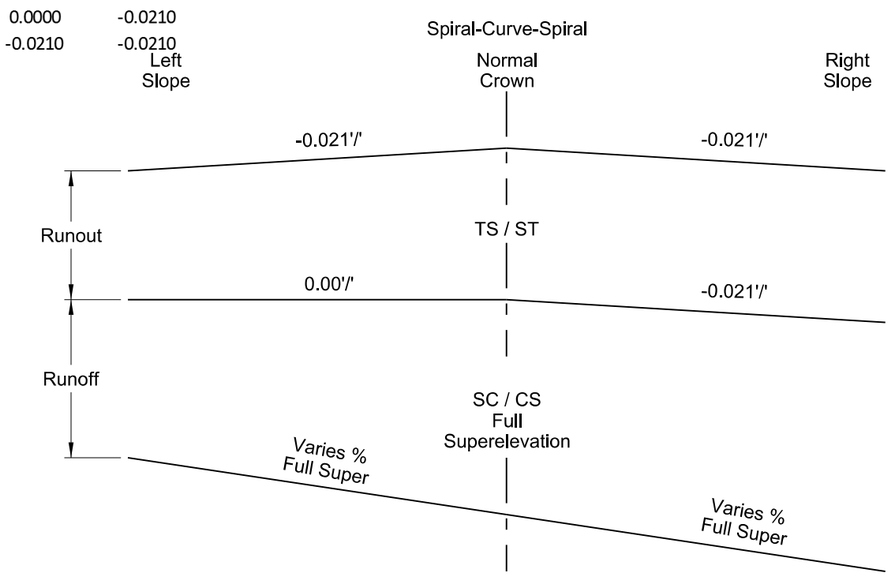

This document was originally issued and sealed by Jeffrey T. Lansink Registration Number PE- 5244, on 11/3/15 and the original document is stored at the North Dakota Department of Transportation

Super Elevation Tables

ND 23 - ND 28 to County Rd 13

STATE	PROJECT NO.	SECTION NO.	SHEET NO.
ND	SOIB-SOI-4-023(019)087	11	31

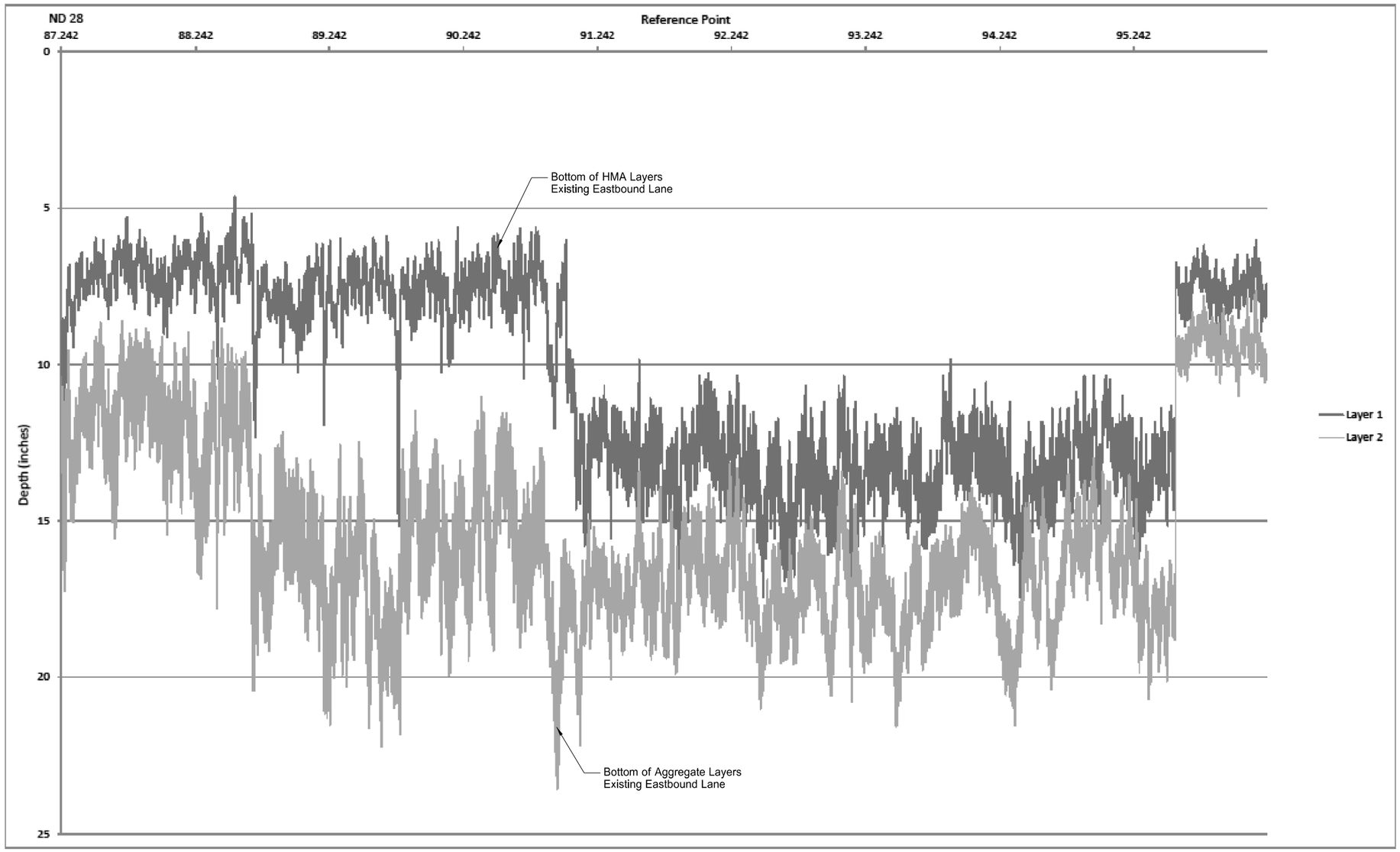

This document was originally issued and sealed by Jeffrey T. Lansink Registration Number PE- 5244, on 11/3/15 and the original document is stored at the North Dakota Department of Transportation

GPR Data

Eastbound
ND 23 - ND 28 to County Rd 13

STATE	PROJECT NO.	SECTION NO.	SHEET NO.
ND	SOIB-SOI-4-023(019)087	11	32

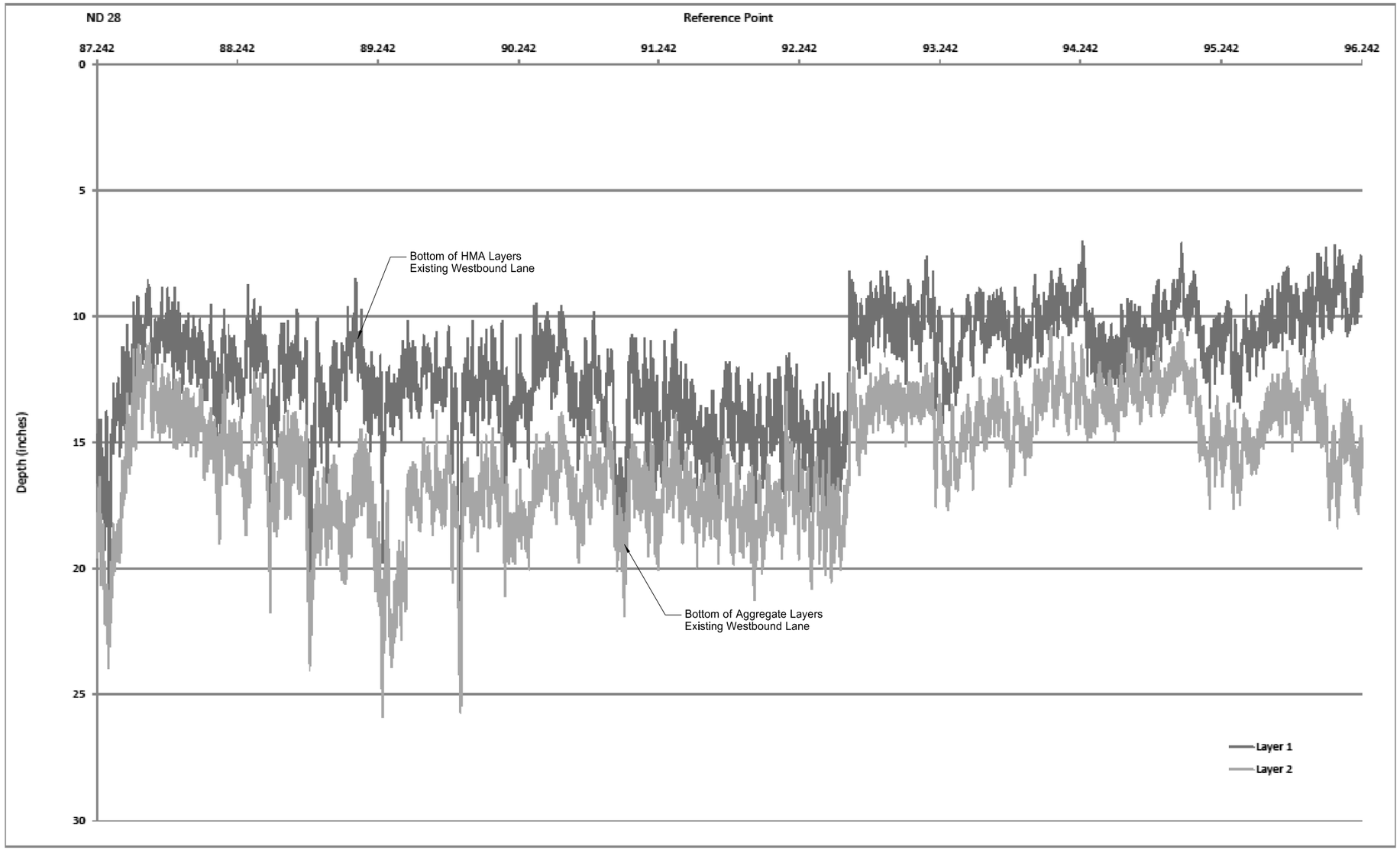

This document was originally issued and sealed by Jeffrey T. Lansink Registration Number PE- 5244, on 11/3/15 and the original document is stored at the North Dakota Department of Transportation

GPR Data

Westbound
ND 23 - ND 28 to County Rd 13

STATE	PROJECT NO.	SECTION NO.	SHEET NO.
ND	SOIB-SOI-4-023(019)087	20	1

Grade Widening

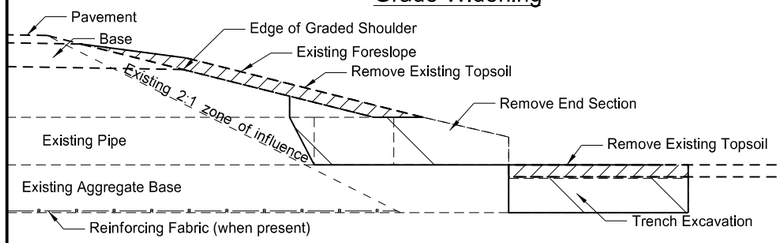

Removal Section

Cross Section View

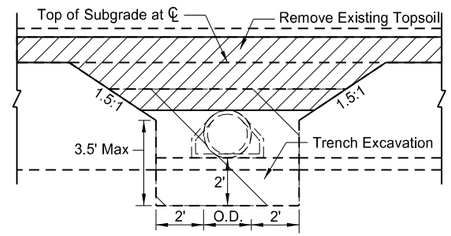

Removal Detail

Side View

No Grade Widening

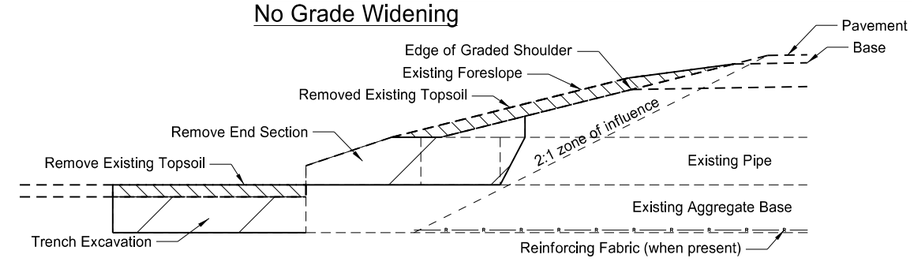

Removal Section

Cross Section View

Pay Items
1) Pipe*
2) Remove & Relay Pipe - All Types & Sizes (when required)
3) Remove & Reset End Section or new End Section
4) Borrow Excavation (Compaction Control Type A) or Common Excavation-Type A
5) Topsoil
6) Seeding
7) Mulching

*Included in Pipe Pay Item
1) Pipe
2) Trench excavation
3) Aggregate Base Course Class 3 or Class 5

Pay Items
1) Pipe*
2) Remove & Reset End Section or Remove End Section and Place New End Section

*Included in Pipe Pay Item
1) Pipe
2) Trench excavation
3) Aggregate Base Course Class 3 or Class 5
4) Embankment (Compaction Control Type A)
5) Topsoil, Seeding, and Mulch

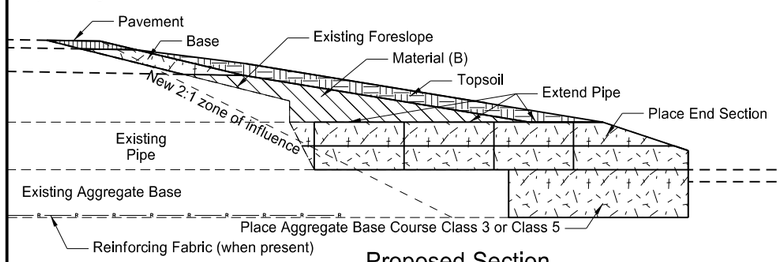

Proposed Section

Cross Section View

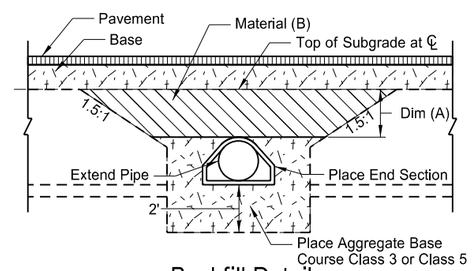

Backfill Detail

Side View (Topsoil not shown)

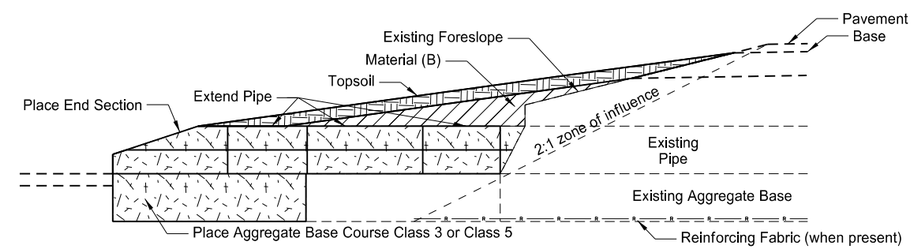

Proposed Section

Cross Section View

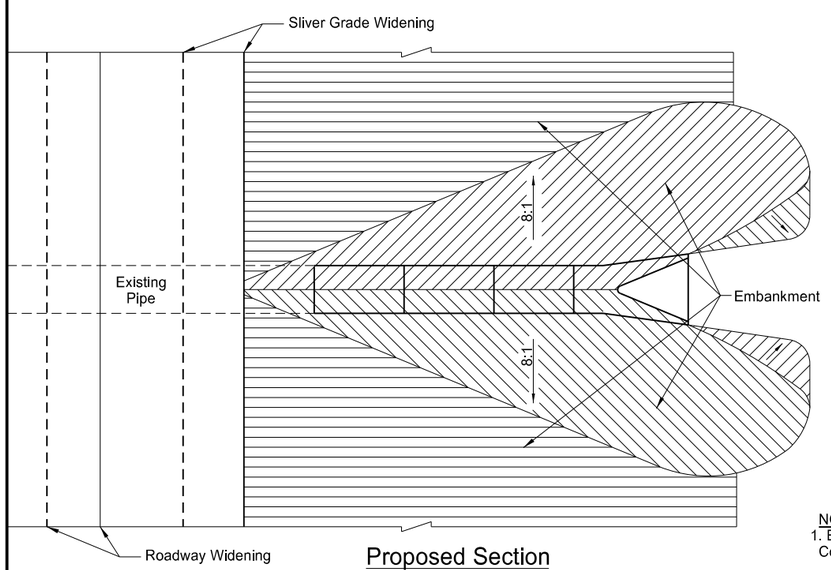

Proposed Section

Plan View

Pipe Materials	Dim (A)<=4 Feet Material (B)	Dim (A)>4 Feet Material (B)
Concrete	Embank or Aggr	Embank or Aggr
Metal	Embank or Aggr	Embank or Aggr

NOTES:
1. Embankment may be either Borrow Excavation (Compaction Control - Type A) or Common Excavation - Type A.
2. Aggregate may be either Class 3 or Class 5 Aggregate Base Course.

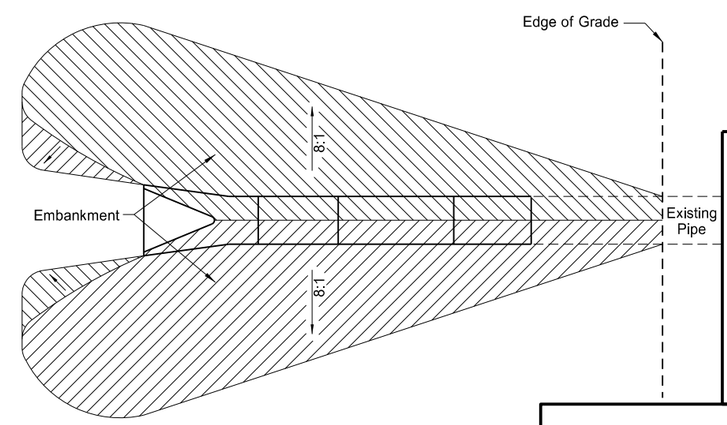

Proposed Section

Plan View

This document was originally issued and sealed by Jeffrey T. Lansink Registration Number PE- 5244, on 11/3/15 and the original document is stored at the North Dakota Department of Transportation

Mainline ℄ Pipe Extension Detail

ND 23 - ND 28 to Country Rd 13

STATE	PROJECT NO.	SECTION NO.	SHEET NO.
ND	SOIB-SOI-4-023(019)087	20	2

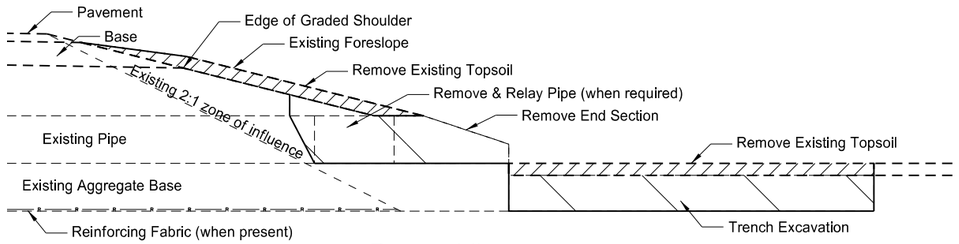

Removal Section

Cross Section View

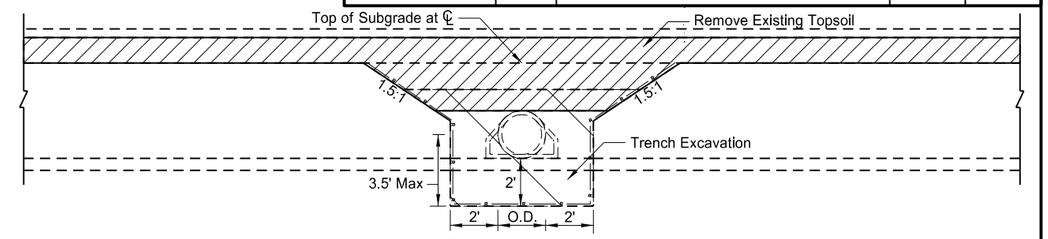

Removal Detail

Side View

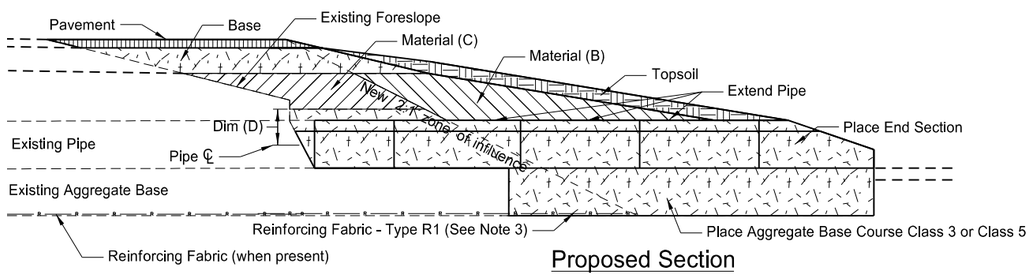

Proposed Section

Cross Section View

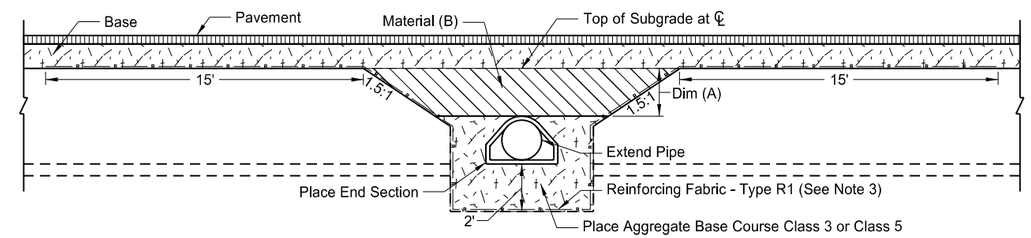

Backfill Detail

Side View (Topsoil not shown)

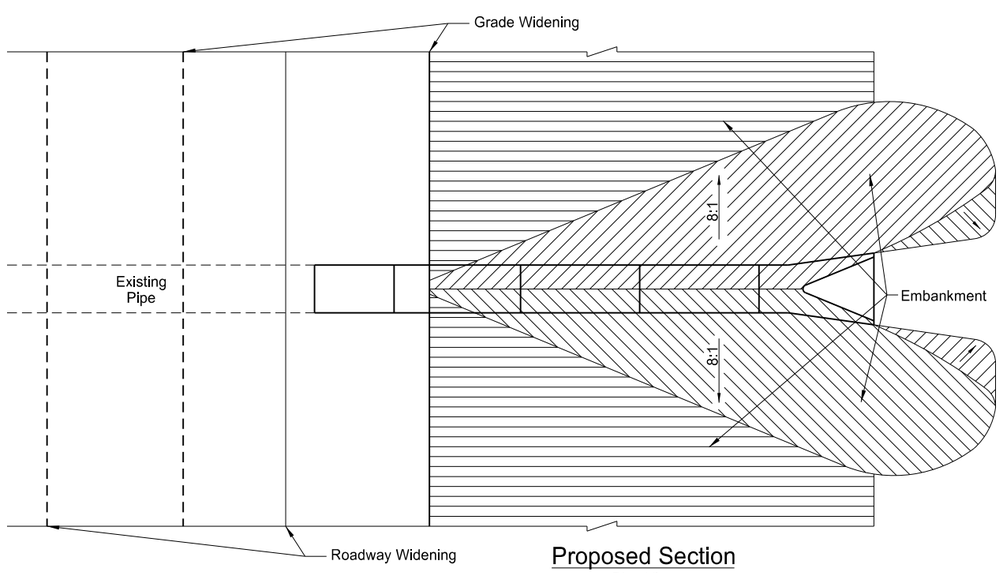

Proposed Section

Plan View

Pay Items
1) Pipe*
2) Remove & Relay Pipe - All Types & Sizes (when required)
3) Remove & Reset End Section or
   Remove End Section and Place New End Section
4) Reinforcement Fabric - Type R1
5) Borrow Excavation (Compaction Control Type A) or
   Common Excavation-Type A
6) Topsoil
7) Seeding
8) Mulching

*Included in Pipe Pay Item
1) Pipe
2) Trench excavation
3) Aggregate Base Course Class 3 or Class 5

Pipe Materials	Dim (A)<=4 Feet		Dim (A)>4 Feet		Backfill Dimension
	Material (B)	Material (C)	Material (B)	Material (C)	Dim (D)
Concrete	Embank or Aggr	Aggr	Embank or Aggr	Embank	0.5 O.D.
Metal	Embank or Aggr	Aggr	Embank or Aggr	Embank	0.5 O.D.+1 Foot

NOTES:
1. Embankment may be either Borrow Excavation (Compaction Control - Type A) or Common Excavation - Type A
2. Aggregate may be either Class 3 or Class 5 Aggregate Base Course.
3. When Reinforcing Fabric is provided in the plans at pipe extensions, expose the edge of the existing fabric and connect the new fabric. This may require the removal and resetting of additional sections of pipe. Reinforcing Fabric is not required outside the 2:1 zone of influence.

This document was originally issued and sealed by Jeffrey T. Lansink Registration Number PE- 5244, on 11/3/15 and the original document is stored at the North Dakota Department of Transportation

Mainline ℄ Pipe Extension Detail For Adding a Lane

ND 23 - ND 28 to County Rd 13

STATE	PROJECT NO.	SECTION NO.	SHEET NO.
ND	SOIB-SOI-4-023(019)087	20	3

Note: The Contractor shall reestablish two way traffic with a minimum of 11 ft lanes at the end of the day. If two traffic can not be reestablished; the contractor shall provide 4:1 slopes on the roadway and provide 24 hour flagging at the cost of the Contractor.

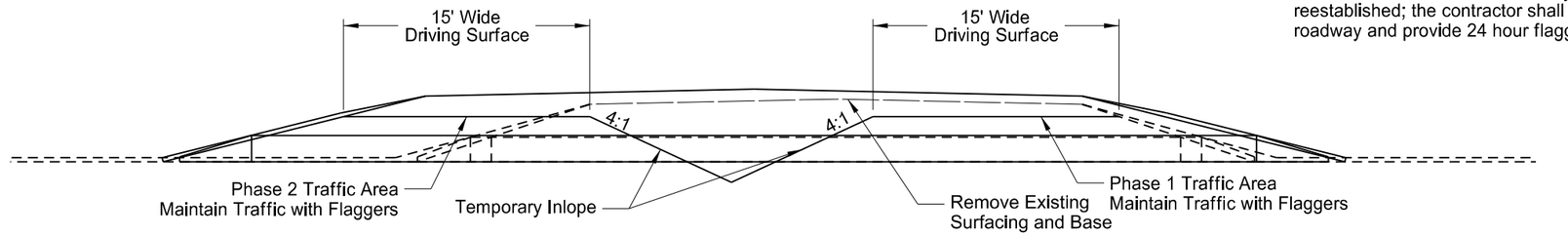

Sta 4645+78
Sta 4903+15
Sta 4928+16

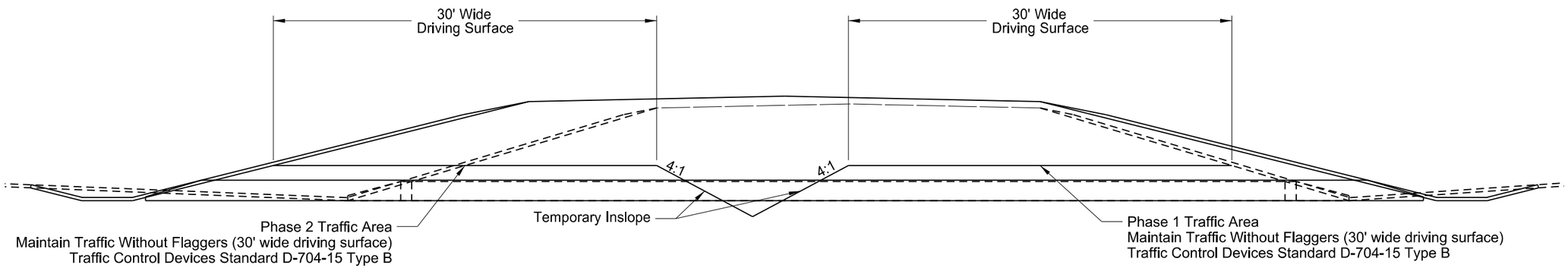

Sta 4670+76	Sta 4853+38
Sta 4714+17	Sta 4957+36
Sta 4718+38	Sta 4995+16
Sta 4737+77	Sta 5004+16
Sta 4806+38	Sta 5020+28

This document was originally issued and sealed by Jeffrey T. Lansink Registration Number PE- 5244, on 11/3/15 and the original document is stored at the North Dakota Department of Transportation

Pipe Installation
Phasing Detail

ND 23 - ND 28 to County Rd 13

STATE	PROJECT NO.	SECTION NO.	SHEET NO.
ND	SOIB-SOI-4-023(019)087	20	4

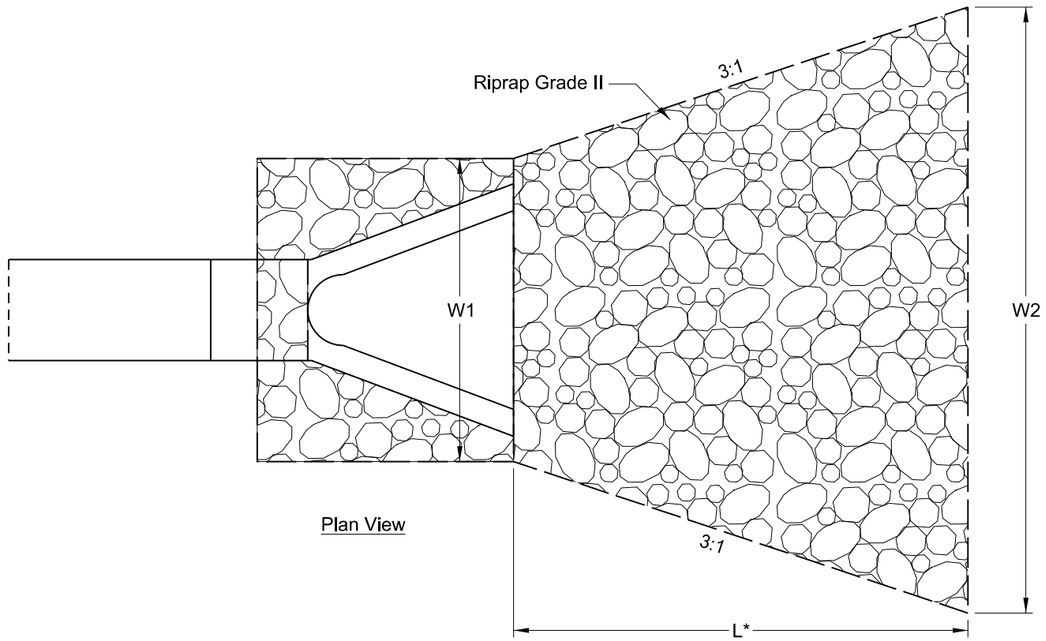

Plan View

Culvert Diameter (IN)	L (ft)	W1 (ft)	W2 (ft)	Riprap Grade II Depth, D (IN)
24	10.0	6.0	13.0	24
30	12.5	7.5	16.0	24

*Riprap to be extended up inslope (at width W1) to an elevation 1' above the crown of the culvert

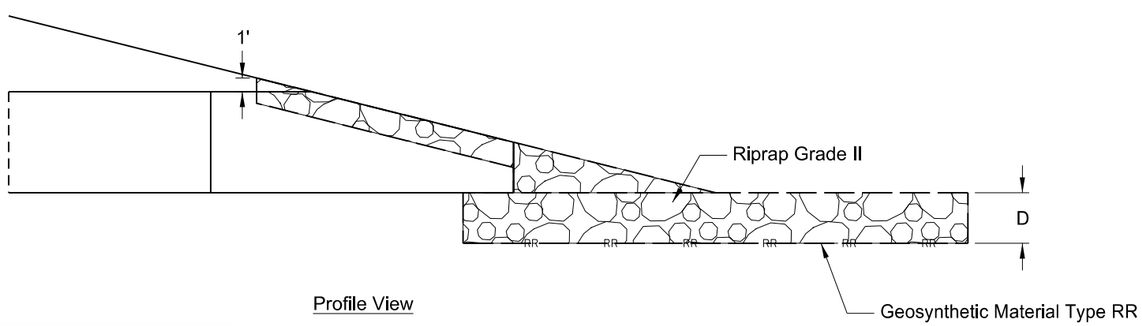

Profile View

Culvert Diameter (IN)	Geosynthetic Material Type RR (SY)	Riprap Grade II (Ton)
24	16	19
30	25	28

Station	Pipe Diameter (IN)	Geosynthetic Material Type RR (SY)	Riprap Grade II (Ton)
4696+18 LT	30	25	28
4714+17 LT	30	25	28
4843+56 LT	24	16	19
5046+50 Approach LT	24	16	19
5046+60 Approach RT	24	16	19
Totals		**98**	**113**

This document was originally issued and sealed by Jeffrey T. Lansink Registration Number PE- 5244, on 11/3/15 and the original document is stored at the North Dakota Department of Transportation

Riprap Detail
Culvert End Sections

ND 23 - ND 28 to County Rd 13

STATE	PROJECT NO.	SECTION NO.	SHEET NO.
ND	SOIB-SOI-4-023(019)087	20	5

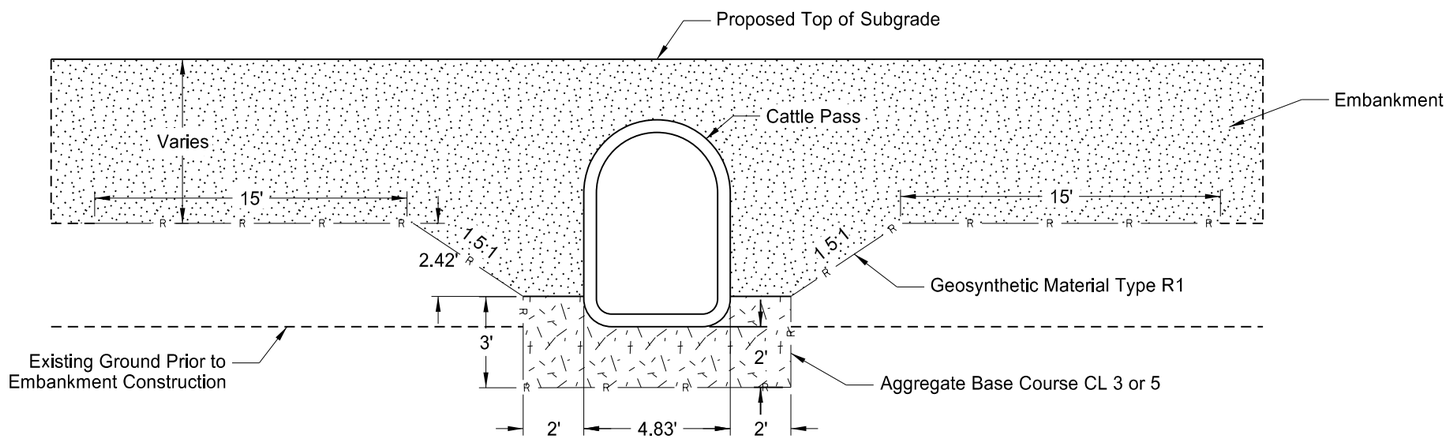

Transverse Centerline Fill For Cattle Pass Extension
Laid On Existing Ground In Embankment Areas

Pay Items
1) Pipe*
2) Geosynthetic Material Type R1

*Included in Cattle Pass Conc Intermed Section Pay Item
1) Pipe
2) Trench excavation
3) Aggregate base course CL 3 or Cl 5
4) Embankment

NOTES
1. Embankment may be either Borrow Excavation or Common Excavation - Type A.
2. All details as shown in Standard Drawing D-714-28 shall apply unless otherwise shown in "Transverse Centerline Fill for Cattle Pass Extension Laid On Existing Ground in Embankment Areas".
3. All details as shown in Standard Drawing D-714-25 shall apply unless otherwise shown in "Transverse Centerline Fill For New Catle Pass".

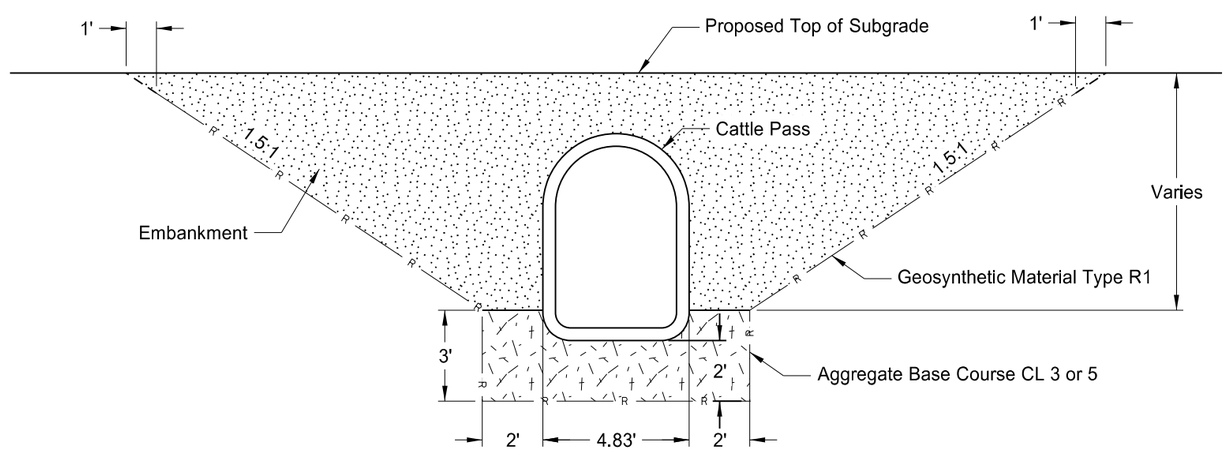

Transverse Centerline Fill For New Cattle Pass

This document was originally issued and sealed by Jeffrey T. Lansink Registration Number PE- 5244, on 11/3/15 and the original document is stored at the North Dakota Department of Transportation

Cattle Pass Backfill Detail

ND 23 - ND 28 to County Rd 13

STATE	PROJECT NO.	SECTION NO.	SHEET NO.
ND	SOIB-SOI-4-023(019)087	20	6

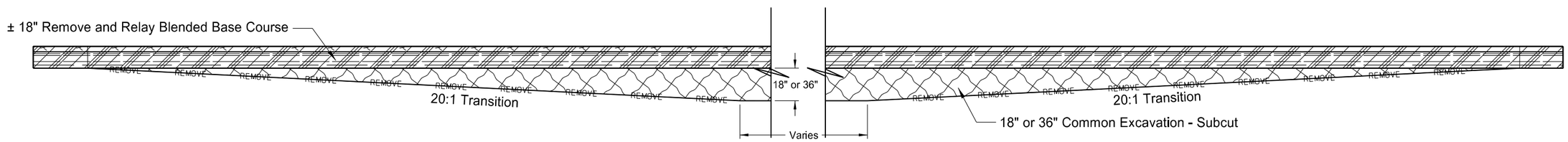

Subcut Removal

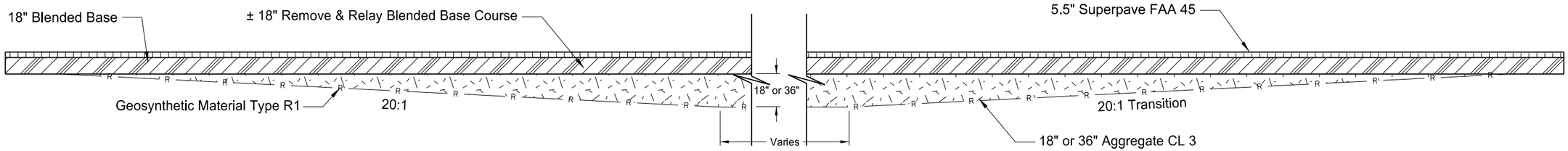

Subcut - Backfill

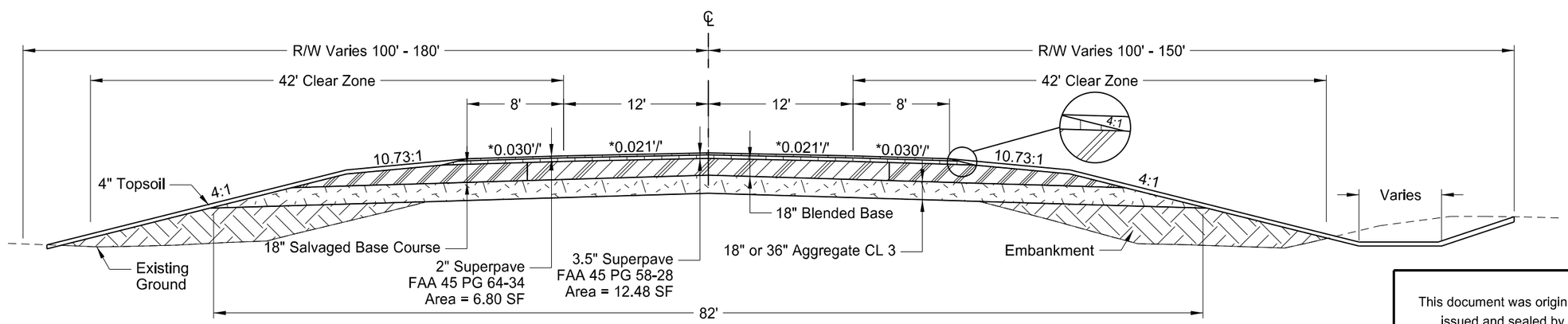

Subcut Removal Locations
Sta 4693+50 to Sta 4694+90
Sta 5033+90 to Sta 5035+30

Begin Station	End Station	Subcut Depth (IN)	Aggregate CL 3 Volume (CY)	Aggregate CL 3 Mass (Ton)
4693+50	4694+90	36	1,017	3,448
5033+90	5035+30	36	1,017	3,448
Discretionary Subcut (2000 LF)		18	4,409	16,059
Totals			**6,443**	**22,955**

This document was originally issued and sealed by Jeffrey T. Lansink Registration Number PE- 5244, on 11/3/15 and the original document is stored at the North Dakota Department of Transportation

Subcut Detail

ND 23 - ND 28 to County Rd 13

STATE	PROJECT NO.	SECTION NO.	SHEET NO.
ND	SOIB-SOI-4-023(019)087	20	7

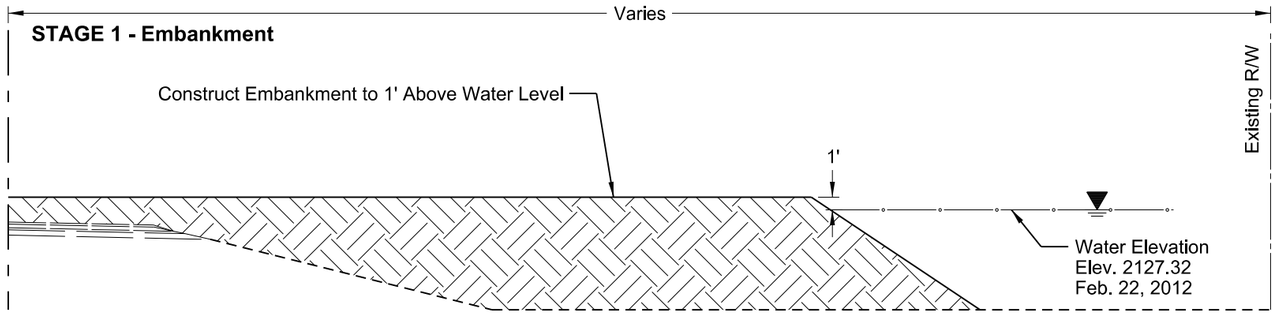

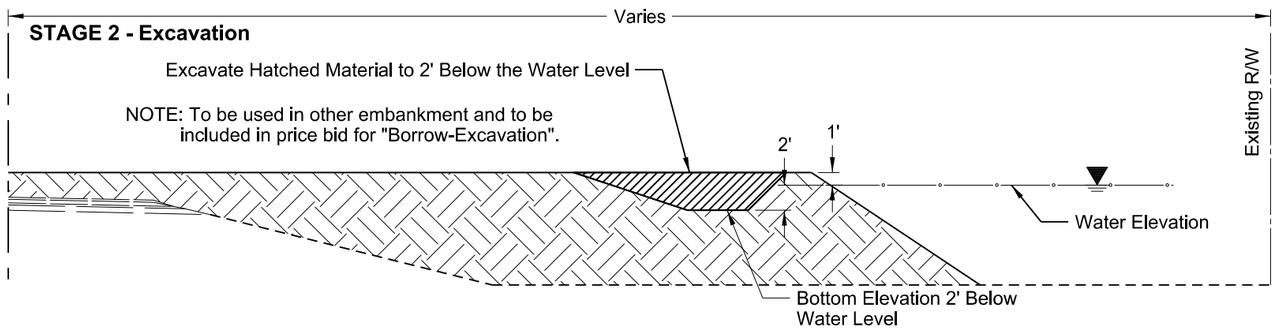

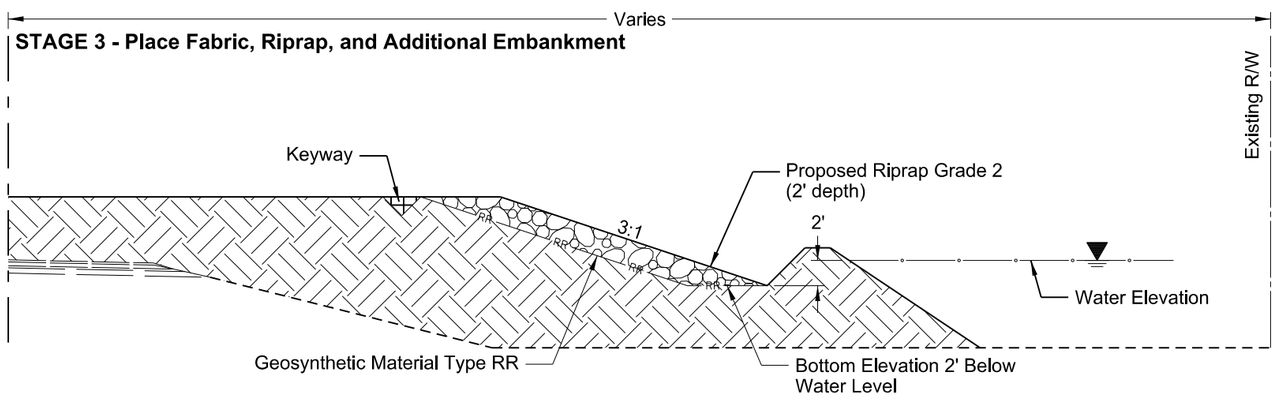

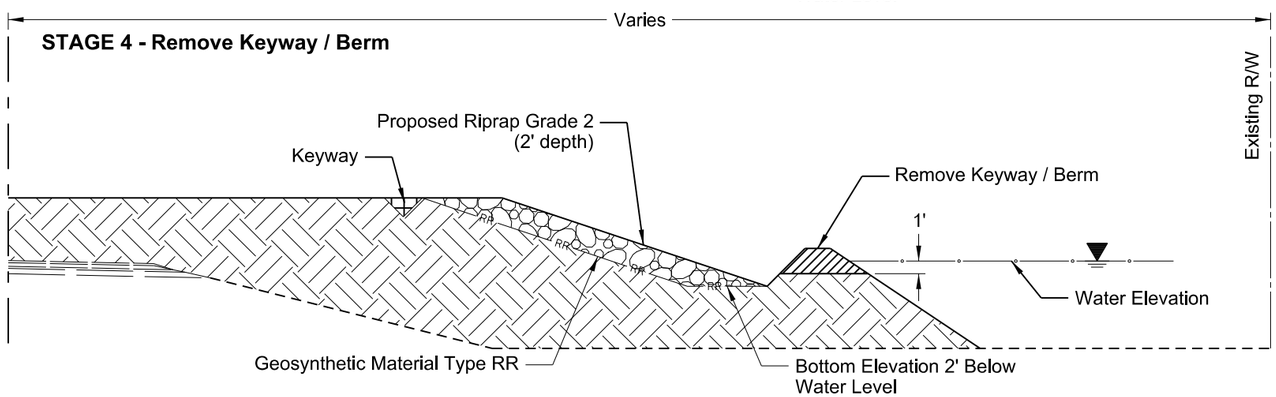

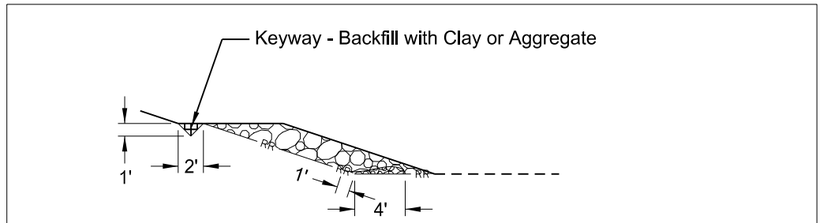

* Fabric Quantity for Dutch Wrap and Keyway Included in Geosynthetic Material Quantities.

Geotextile Fabric and Riprap
Placement Detail

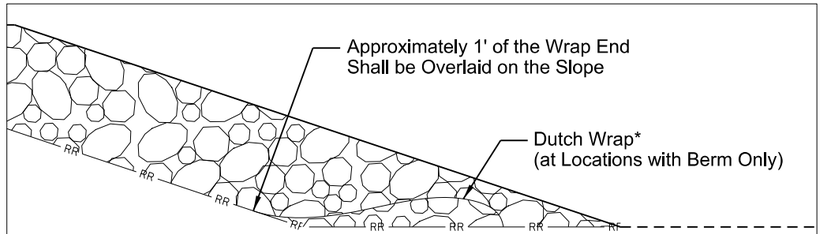

* Fabric Quantity for Dutch Wrap and Keyway Included in Geosynthetic Material Quantities.

Dutch Wrap
Placement Detail

Note - Engineer to verify water elevation during construction. Berms to be constructed where 8' of water depth or greater.

This document was originally issued and sealed by Jeffrey T. Lansink Registration Number PE -5244 , on 11/3/15 and the original document is stored at the North Dakota Department of Transportation

Proposed Embankment Section
Riprap Placement, Sequence, and Details

ND 23 - ND 28 to County Rd 13

STATE	PROJECT NO.	SECTION NO.	SHEET NO.
ND	SOIB-SOI-4-023(019)087	20	8

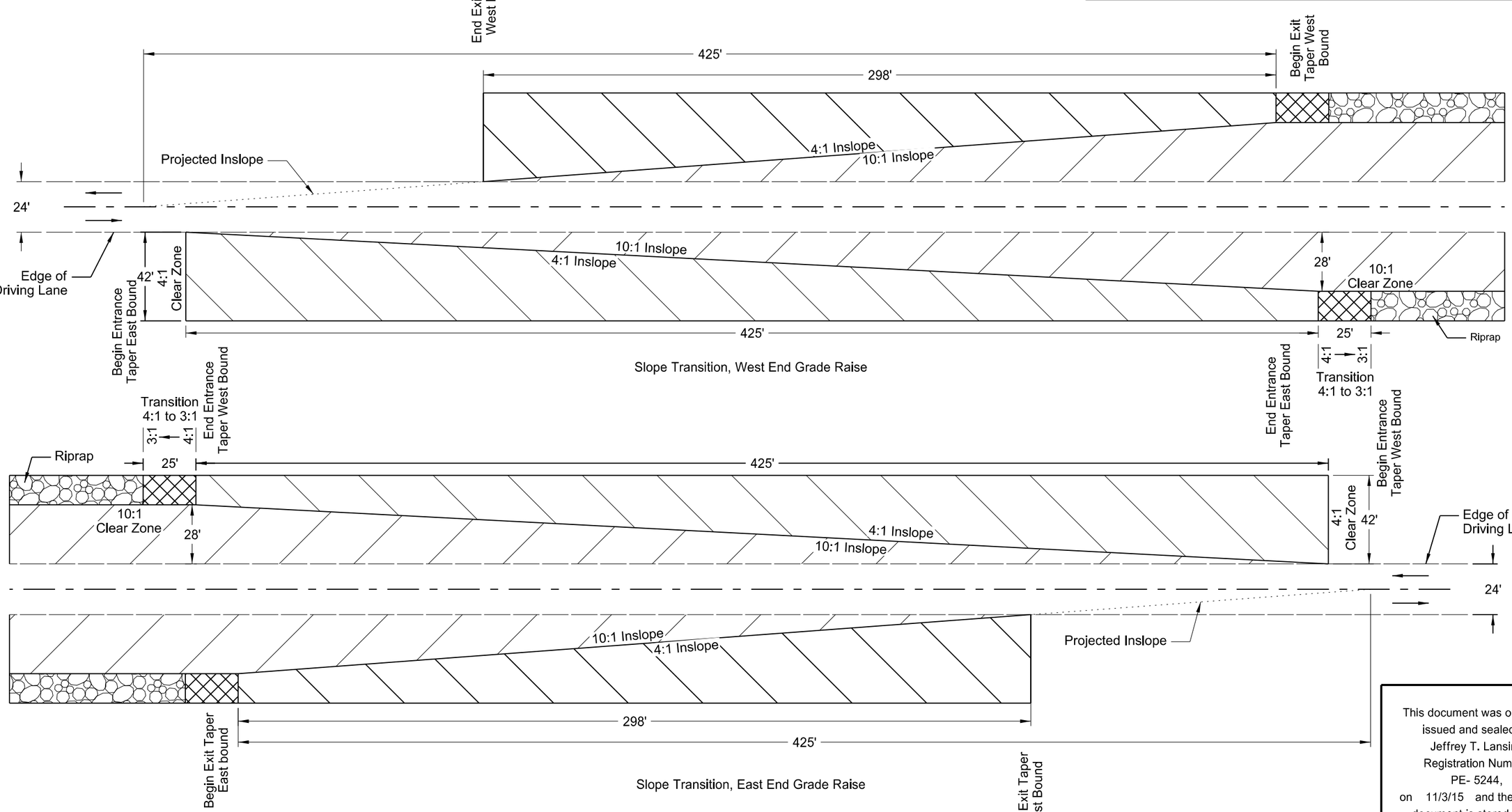

Clear Zone Slope Transition								
Grade Raise	End Exit Taper WB	Begin Exit Taper WB	Begin Entrance Taper EB	End Entrance Taper EB	End Entrance Taper WB	Begin Entrance Taper WB	Begin Exit Taper EB	End Exit Taper EB
RP 88.5	4662+07	4665+05	4660+70	4664+95	4680+35	4684+60	4680+35	4683+33
RP 89.5	4700+27	4703+25	4711+50	4715+75	4729+85	4734+10	4726+75	4729+73
RP 91.0	4796+97	4799+95	4795+10	4799+35	4812+65	4816+90	4815+45	4818+43
RP 92.0	4845+87	4848+85	4844+70	4848+95	4860+95	4865+20	4865+65	4868+63
RP 95.0	4988+87	4991+85	4988+70	4992+95	5028+95	5033+20	5029+65	5032+63

This document was originally issued and sealed by Jeffrey T. Lansink Registration Number PE- 5244, on 11/3/15 and the original document is stored at the North Dakota Department of Transportation

Slope Transitions

ND 23 - ND 28 to County Rd 13

STATE	PROJECT NO.	SECTION NO.	SHEET NO.
ND	SOIB-SOI-4-023(019)087	20	9

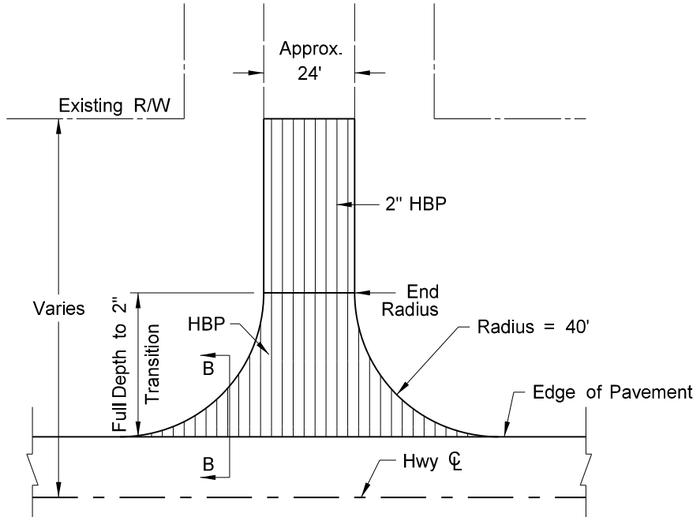

(1) Paved Section Line, County Road, or Street Approach

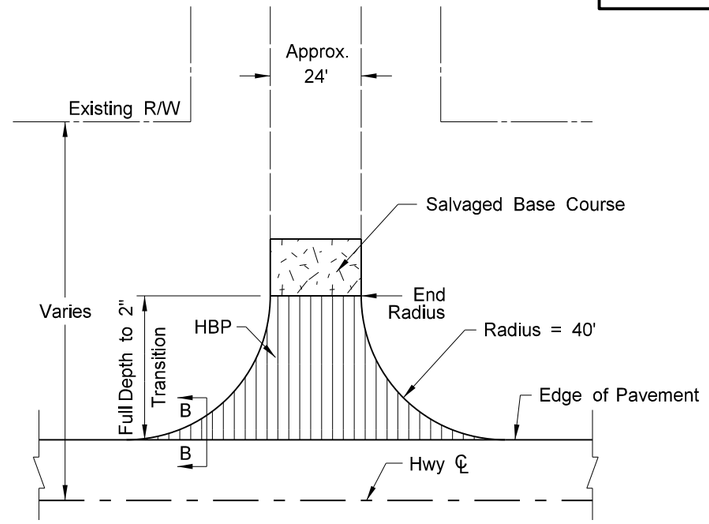

(2) Gravel Section Line, County Road, or Street Approach

Notes:

1. Actual HBP paving and salvaged base locations may vary in the field, as approved by the Engineer.
2. Quantity totals have been included in the bid items of the "Estimate of Quantities" of the plans.
3. Approximately 500 tons of salvaged base have been provided to fill in around the radii. This material will be required when sloughs are steeper than 4:1, see B-B.

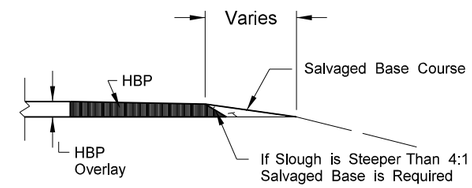

Section B-B

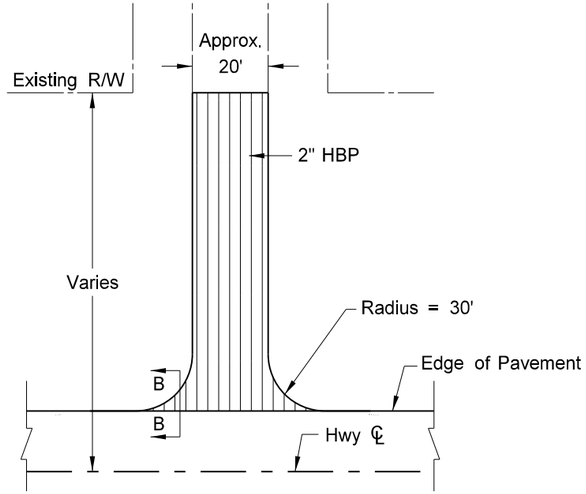

(3) Paved Private Drive Approach

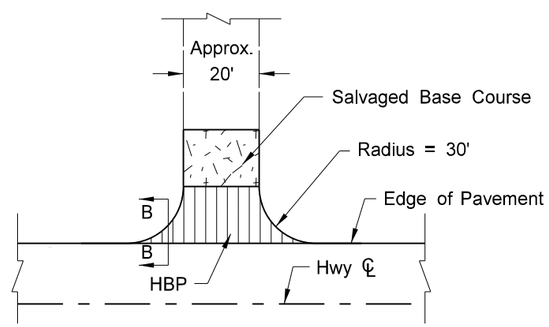

(4) Gravel Private Drive Approach

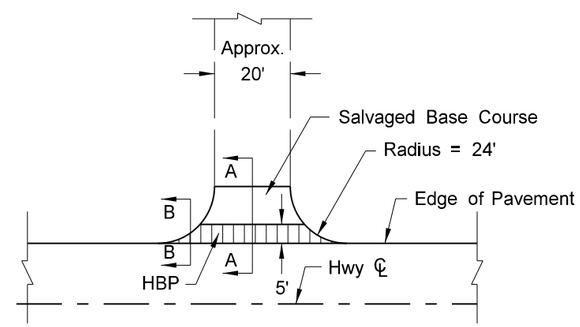

(5) Field Drive Approach

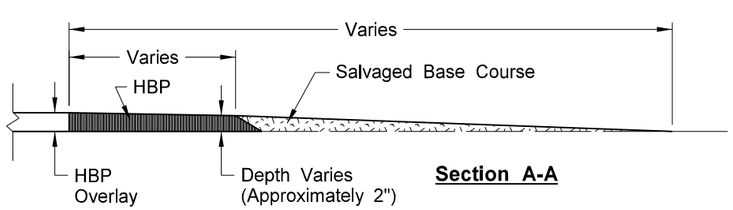

Section A-A

BASIS OF ESTIMATE		(1)	(2)	(3)	(4)	(5)	
ITEM	UNIT	Paved Section Line	Gravel Section Line	Paved Private Drive	Gravel Private Drive	Field Drive	TOTALS
Number of Locations	#	3	18	0	5	23	49
Salvaged Base	TON	4958	2160	0	250	574	7942
Tack Coat	GAL	225	180	0	25	23	453
FAA 45	TON	1535	1350	0	105	184	3174
Asphalt Cement	TON	92	81	0	6	11	190

This document was originally issued and sealed by Jeffrey T. Lansink Registration Number PE- 5244, on 11/3/15 and the original document is stored at the North Dakota Department of Transportation

Approach Paving Details

ND 23 - ND 28 to County Rd 13

STATE	PROJECT NO.	SECTION NO.	SHEET NO.
ND	SOIB-SOI-4-023(019)087	20	10

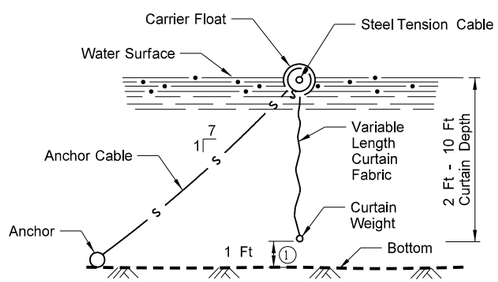

SECTION X-X
FLOTATION SILT CURTAINS

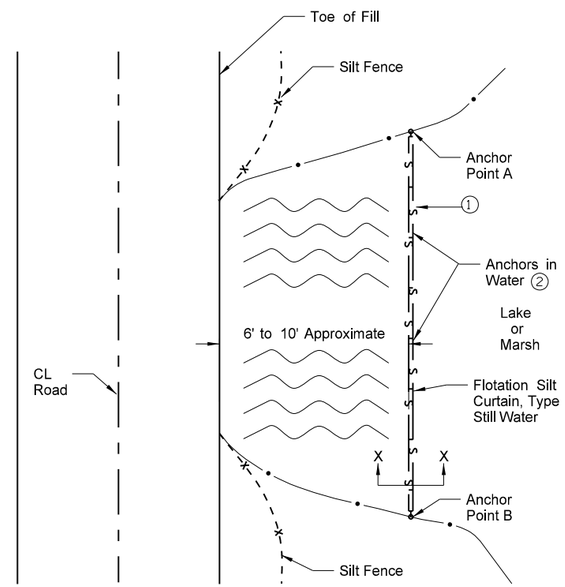

PLAN VIEW
FLOTATION SILT CURTAIN - TYPE STILL WATER

DESIGN GUIDELINES:
MAXIMUM WATER DEPTH: 11 FT. 1
MINIMUM WATER DEPTH: 3 FT.

Use enough Anchors to Hold Silt Curtain 2 in Place

This document was originally issued and sealed by Jeffrey T. Lansink Registration Number PE- 5244, on 11/3/15 and the original document is stored at the North Dakota Department of Transportation

Temporary Erosion Control
Flotation Silt Curtain

ND 23 - ND 28 to County Rd 13

STATE	PROJECT NO.	SECTION NO.	SHEET NO.
ND	SOIB-SOI-4-023(019)087	20	11

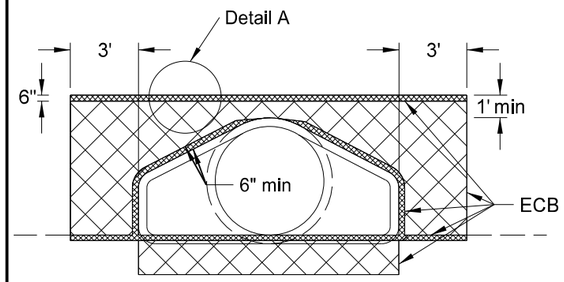

FRONT VIEW

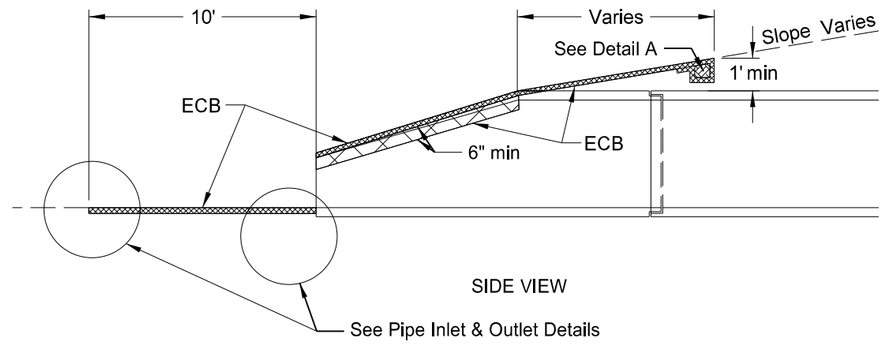

SIDE VIEW

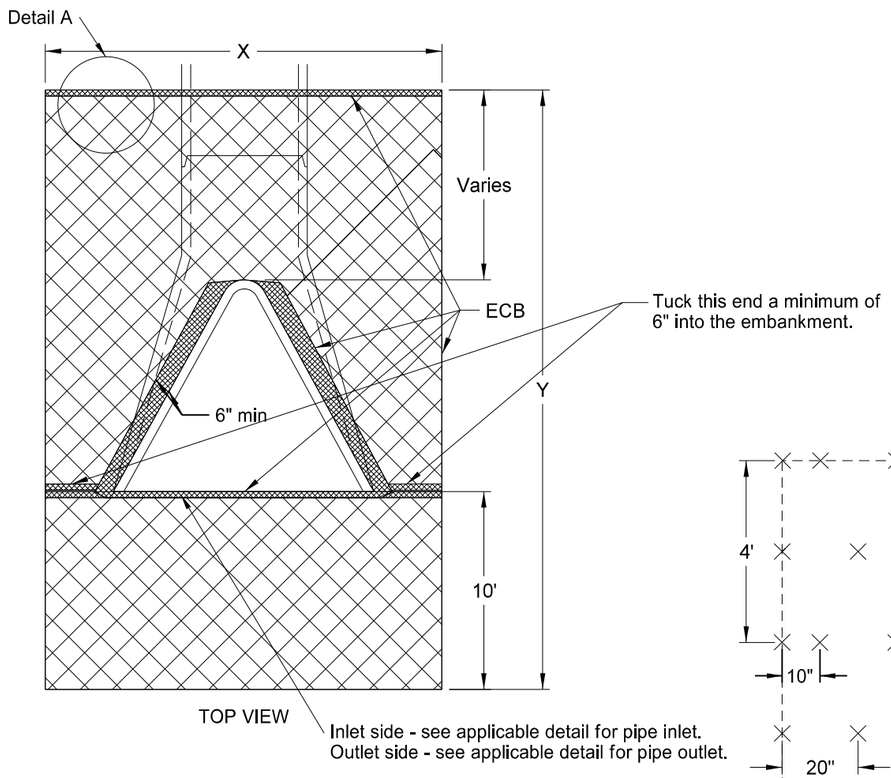

TOP VIEW

NOTE: Tuck the ECB a minimum of 6" into the embankment (against the flared end section) around the opening of the flared end section.

DIA	X	Y	Surface area to be protected	ECB
In	Ft	Ft	SF	SY
15	9.0	20.0	176.0	20
18	9.5	20.7	190.7	22
21	9.5	21.0	190.9	22
24	10.5	21.6	214.1	24
27	11.0	22.0	226.3	25
30	11.6	22.5	241.5	27
36	12.7	23.3	268.8	30
42	13.3	23.3	279.7	31
48	13.8	24.0	293.2	33
54	14.5	23.4	300.6	34
60	15.0	23.0	307.5	35
66	15.6	24.0	325.6	37
72	16.2	24.5	340.6	38

Note: Quantities based on 8:1 slope.

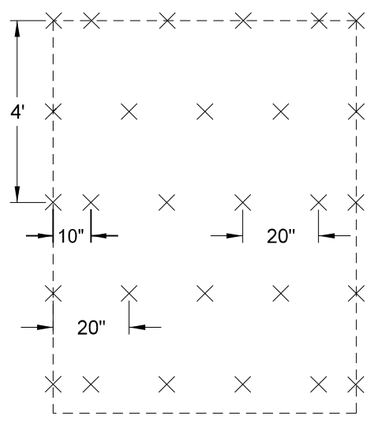

STAPLE PATTERN

Erosion Control Blanket (ECB)							
Location of Surface Area to be Protected	Pipe Diam	No	Unit Quantity	Total Quantity			
				Type 1	Type 2	Type 3	Type 4
Station	(Inch)		(SY)	(SY)	(SY)	(SY)	(SY)
4632+09 Rt	30	1	27	27	0	0	0
4632+66 Lt	30	1	27	27	0	0	0
4645+78 Lt & Rt	24	2	24	48	0	0	0
4670+76 Lt & Rt	30	2	27	54	0	0	0
4686+68 Lt & Rt	30	2	27	54	0	0	0
4718+38 Lt & Rt	30	2	27	54	0	0	0
4737+77 Lt & Rt	30	2	27	54	0	0	0
4787+68 Lt & Rt	30	2	27	54	0	0	0
4806+38 Lt & Rt	30	2	27	54	0	0	0
4853+38 Lt & Rt	30	2	27	54	0	0	0
4875+15 Lt & Rt	30	2	27	54	0	0	0
4903+15 Lt & Rt	30	2	27	54	0	0	0
4915+86 Lt & Rt	30	2	27	54	0	0	0
4928+16 Lt & Rt	30	2	27	54	0	0	0
4957+36 Lt & Rt	30	2	27	54	0	0	0
4968+66 Lt & Rt	30	2	27	54	0	0	0
4995+16 Lt & Rt	30	2	27	54	0	0	0
5004+16 Lt & Rt	30	2	27	54	0	0	0
5020+28 Lt & Rt	30	2	27	54	0	0	0
5044+28 Lt & Rt	30	1	27	27	0	0	0
Total (SY)				993	0	0	0

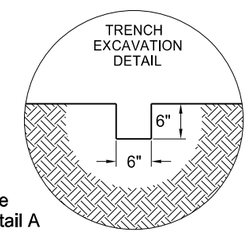

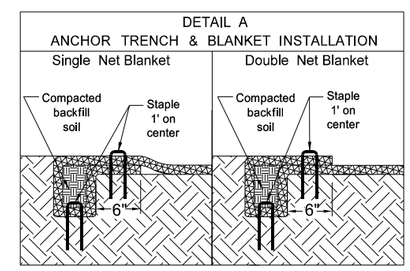

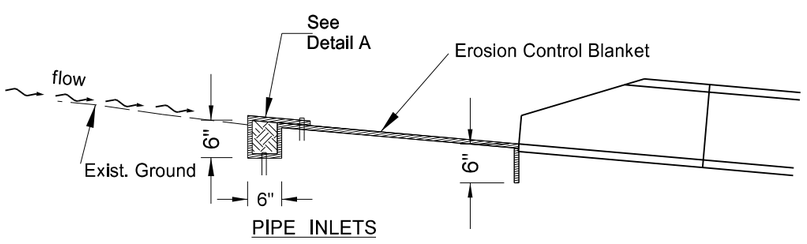

PIPE INLETS

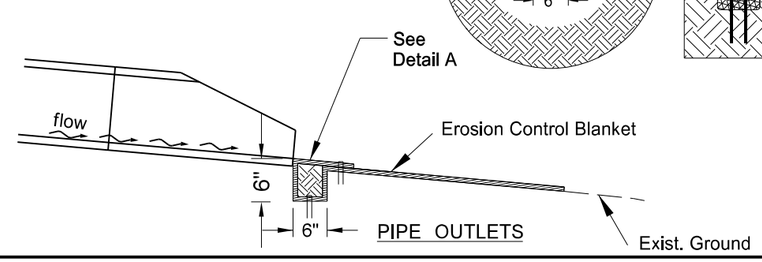

PIPE OUTLETS

This document was originally issued and sealed by Jeffrey T. Lansink Registration Number PE- 5244, on 11/3/15 and the original document is stored at the North Dakota Department of Transportation

Erosion Control at Culvert Flared End Sections

ND 23 - ND 28 to County Rd 13

STATE	PROJECT NO.	SECTION NO.	SHEET NO.
ND	SOIB-SOI-4-023(019)087	30	1

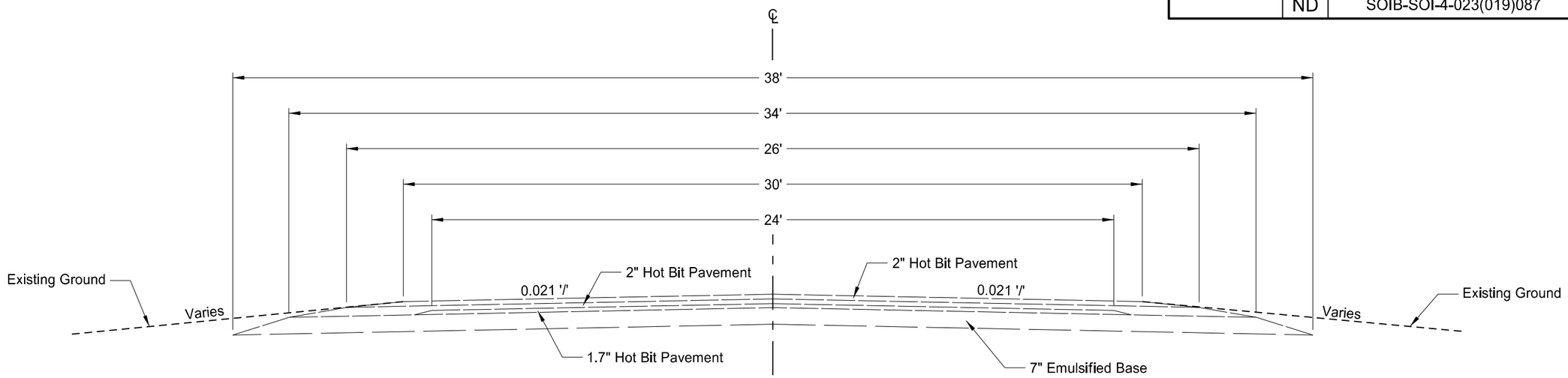

TANGENT
Sta 4606+40.00 to 4937+84.74
Sta 4964+73.59 to 4986+71.64
Sta 5017+89.48 to 5038+72.21
Sta 5066+16.77 to 5071+00.00

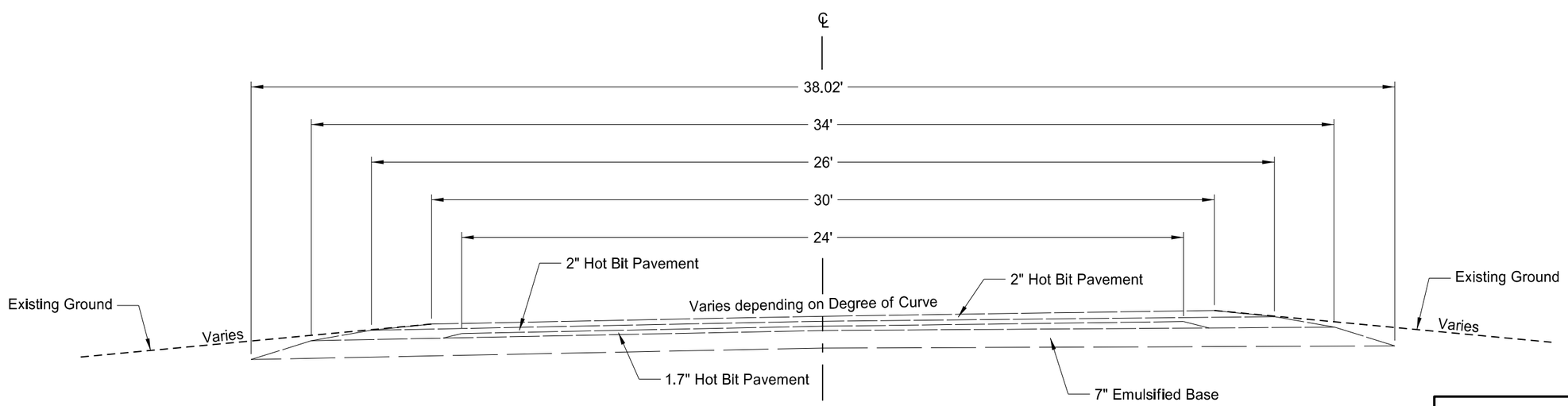

CURVE
Sta 4937+84.74 to 4964+73.59
Sta 4986+71.64 to 5017+89.48
Sta 5038+72.21 to 5066+16.77

This document was originally issued and sealed by Jeffrey T. Lansink Registration Number PE- 5244, on 11/3/15 and the original document is stored at the North Dakota Department of Transportation

Typical Sections
Existing

ND 23 - ND 28 to County Rd 13

STATE	PROJECT NO.	SECTION NO.	SHEET NO.
ND	SOIB-SOI-4-023(019)087	30	2

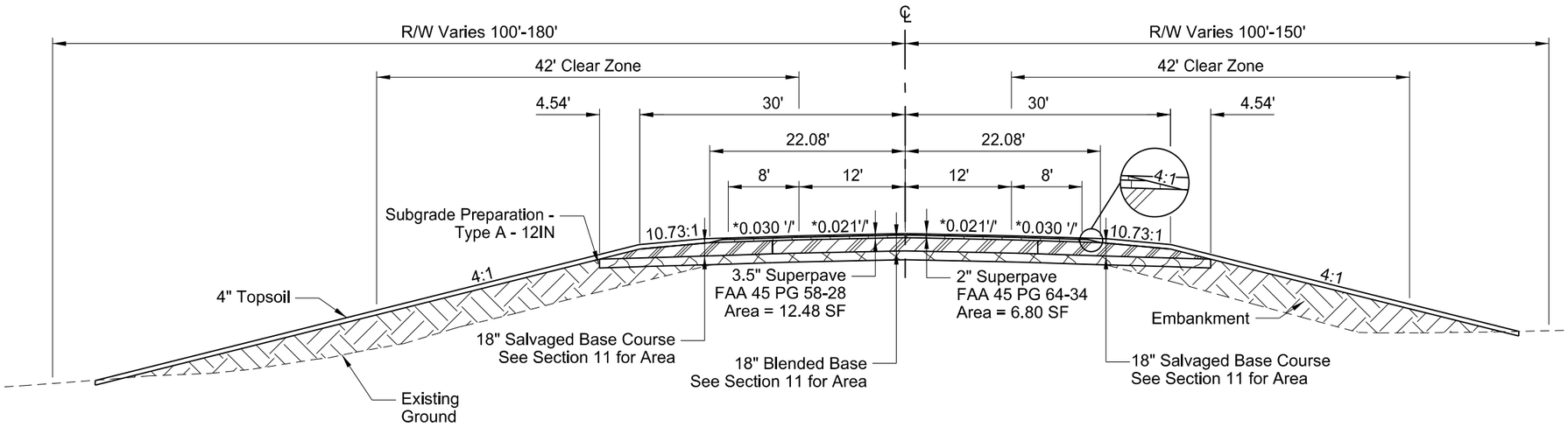

RECONSTRUCTION

Sta 4664+00.00 to 4664+95.00
Sta 4694+90.00 to 4701+10.00
Sta 4732+90.00 to 4734+00.00
Sta 4741+00.00 to 4755+60.00
Sta 5032+00.00 to 5033+90.00

*Note: See Section 11
for Superelevation Data

This document was originally issued and sealed by Jeffrey T. Lansink Registration Number PE- 5244, on 11/3/15 and the original document is stored at the North Dakota Department of Transportation

Typical Sections
Proposed

ND 23 - ND 28 to County Rd 13

STATE	PROJECT NO.	SECTION NO.	SHEET NO.
ND	SOIB-SOI-4-023(019)087	30	3

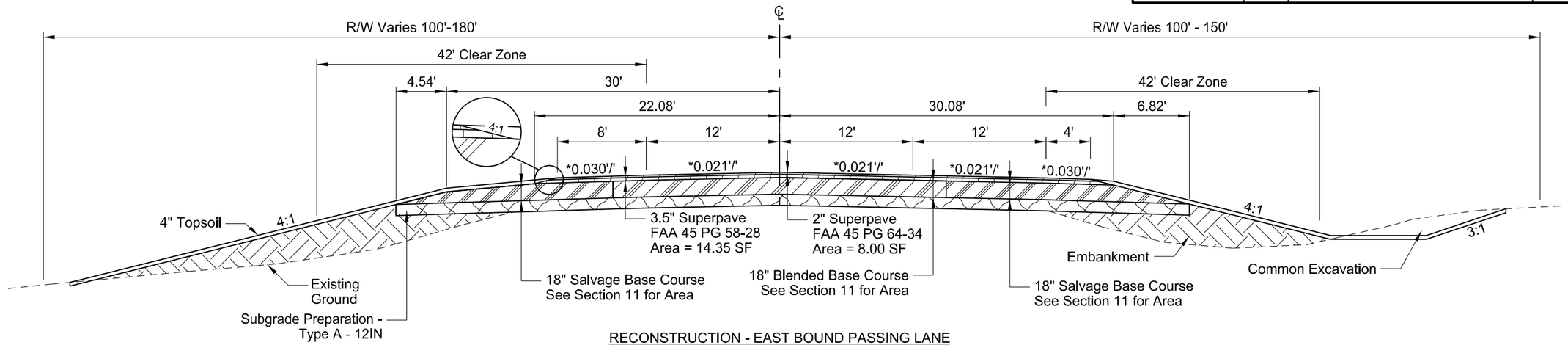

RECONSTRUCTION - EAST BOUND PASSING LANE

Sta 4616+87.36 to 4619+25.00
Sta 4661+80.00 to 4664+00.00

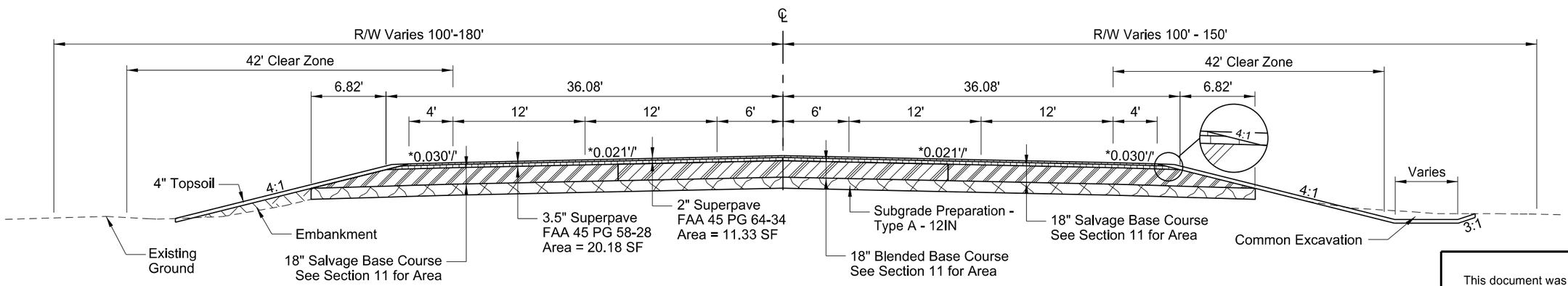

RECONSTRUCTION - EAST AND WEST BOUND PASSING LANE, CENTER TURN LANE

Sta 4606+40.00 to 4616+87.36

This document was originally issued and sealed by Jeffrey T. Lansink Registration Number PE- 5244, on 11/3/15 and the original document is stored at the North Dakota Department of Transportation

Typical Sections
Proposed

ND 23 - ND 28 to County Rd 13

*Note: See Section 11 for Superelevation Data

STATE	PROJECT NO.	SECTION NO.	SHEET NO.
ND	SOIB-SOI-4-023(019)087	30	4

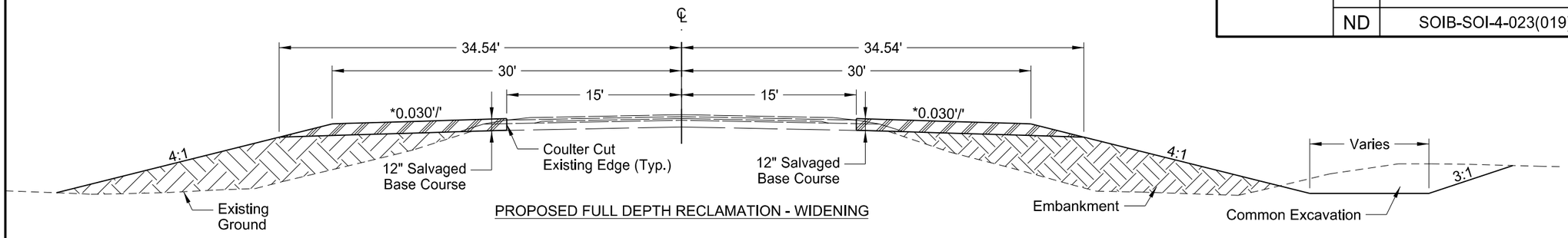

PROPOSED FULL DEPTH RECLAMATION - WIDENING

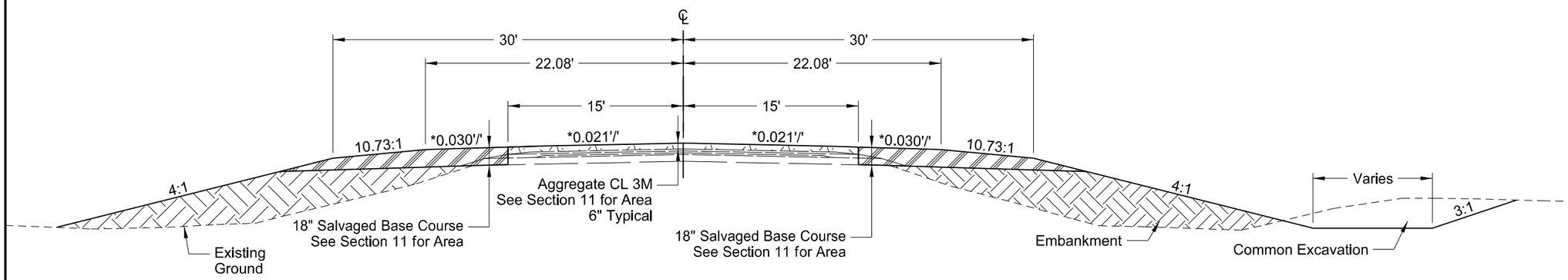

PROPOSED FULL DEPTH RECLAMATION - AGGREGATE PLACEMENT

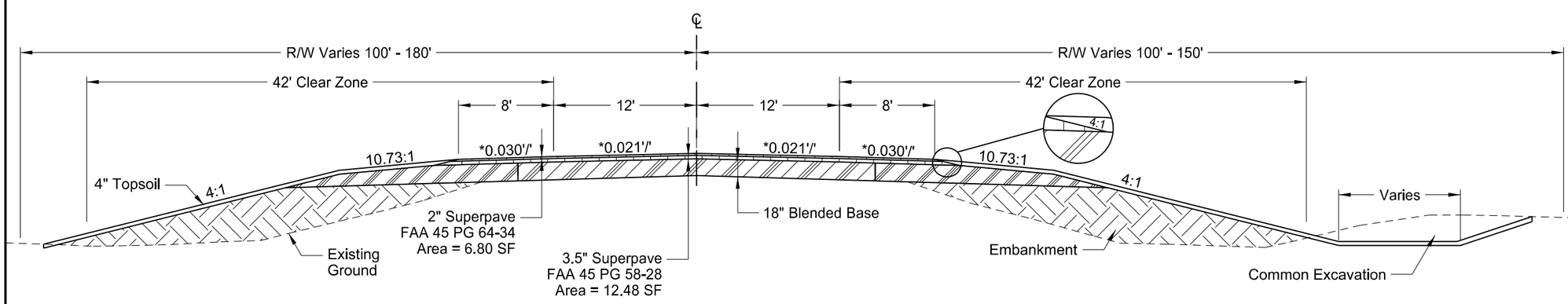

PROPOSED FULL DEPTH RECLAMATION - SURFACING
Sta 4683+40.00 to 4693+50.00
Sta 4734+00.00 to 4741+00.00
Sta 4755+60.00 to 4783+80.00
Sta 4843+20.00 to 4845+90.00
Sta 4931+20.00 to 4989+60.00
Sta 5035+30.00 to 5047+05.00
Sta 5054+15.00 to 5071+00.00

*Note: See Section 11 for Superelevation Data

This document was originally issued and sealed by Jeffrey T. Lansink Registration Number PE- 5244, on 11/3/15 and the original document is stored at the North Dakota Department of Transportation

Typical Sections
Proposed

ND 23 - ND 28 to County Rd 13

STATE	PROJECT NO.	SECTION NO.	SHEET NO.
ND	SOIB-SOI-4-023(019)087	30	5

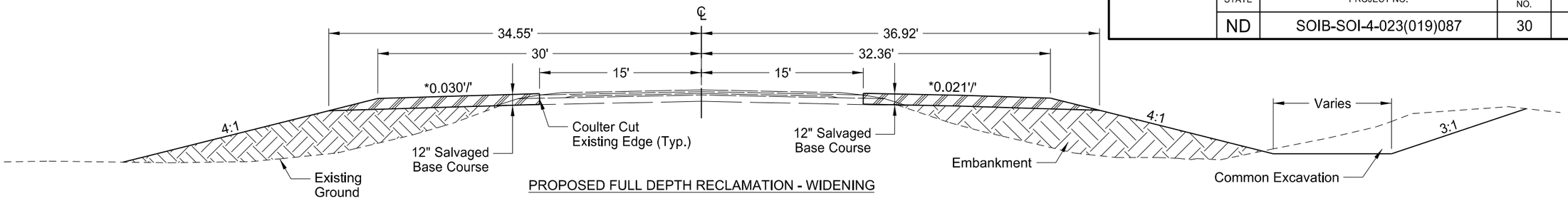

PROPOSED FULL DEPTH RECLAMATION - WIDENING

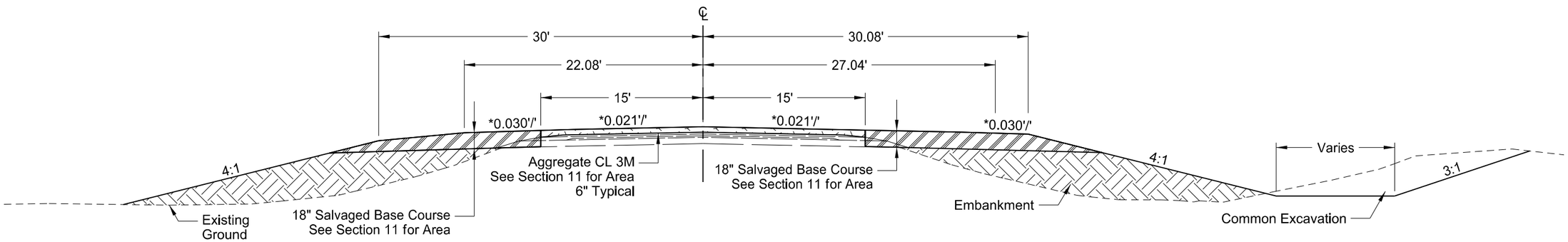

PROPOSED FULL DEPTH RECLAMATION - AGGREGATE PLACEMENT

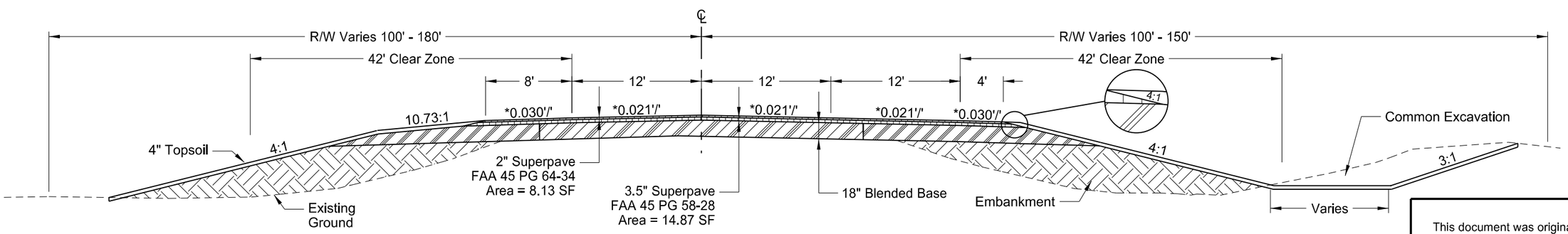

PROPOSED FULL DEPTH RECLAMATION - SURFACING (EAST BOUND PASSING LANE)
Sta 4619+25.00 to 4661+80.00
Sta 4868+20.00 to 4931+20.00

This document was originally issued and sealed by Jeffrey T. Lansink Registration Number PE- 5244, on 11/3/15 and the original document is stored at the North Dakota Department of Transportation

Typical Sections
Proposed

ND 23 - ND 28 to County Rd 13

*Note: See Section 11 for Superelevation Data

STATE	PROJECT NO.	SECTION NO.	SHEET NO.
ND	SOIB-SOI-4-023(019)087	30	6

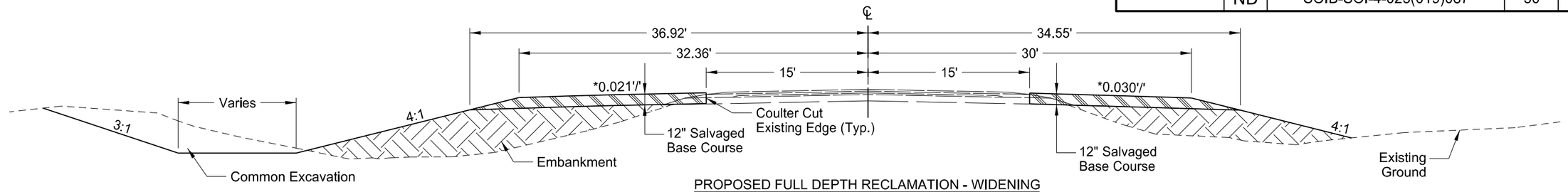

PROPOSED FULL DEPTH RECLAMATION - WIDENING

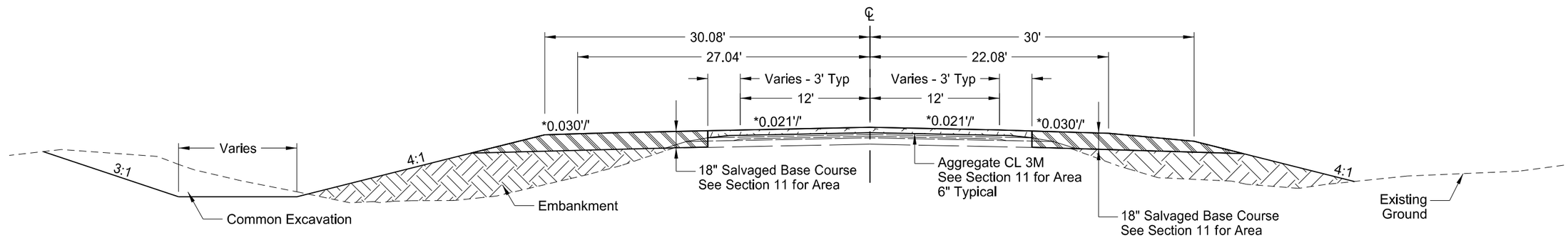

PROPOSED FULL DEPTH RECLAMATION - AGGREGATE PLACEMENT

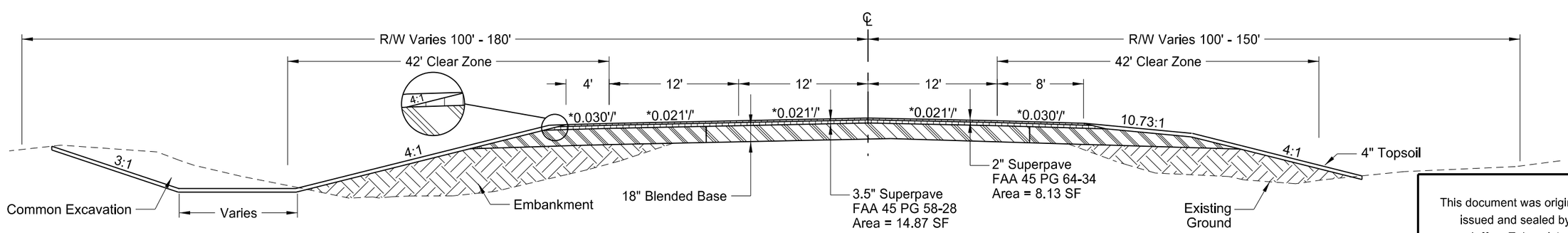

PROPOSED FULL DEPTH RECLAMATION - SURFACING (WEST BOUND PASSING LANE)
Sta 4783+80.00 to 4796+30.00
Sta 4817+60.00 to 4843+20.00
Sta 5047+05.00 to 5054+15.00

This document was originally issued and sealed by Jeffrey T. Lansink Registration Number PE- 5244, on 11/3/15 and the original document is stored at the North Dakota Department of Transportation

Typical Sections
Proposed

ND 23 - ND 28 to County Rd 13

*Note: See Section 11 for Superelevation Data

STATE	PROJECT NO.	SECTION NO.	SHEET NO.
ND	SOIB-SOI-4-023(019)087	30	7

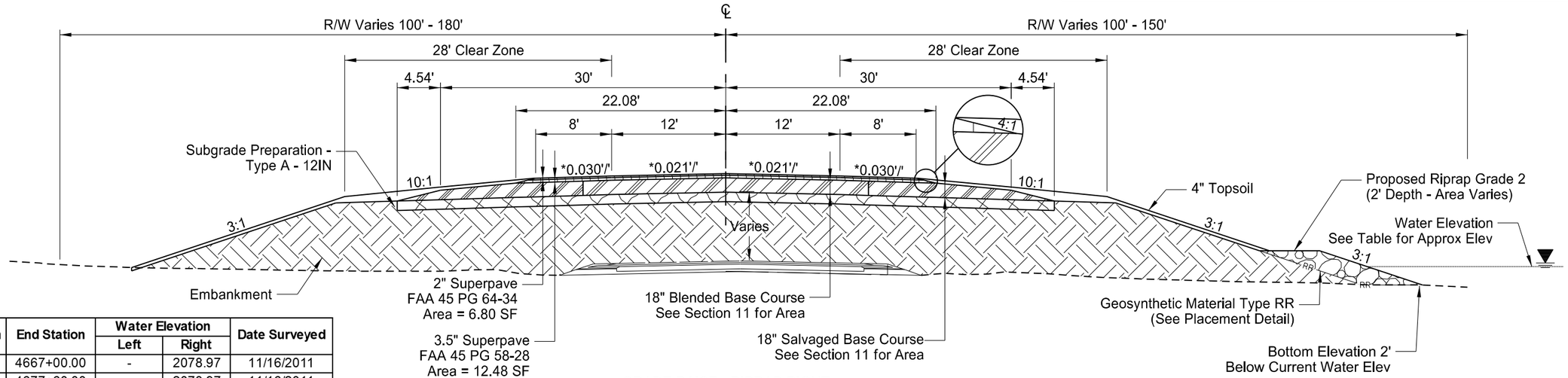

Begin Station	End Station	Water Elevation		Date Surveyed
		Left	Right	
4666+60.00	4667+00.00	-	2078.97	11/16/2011
4677+40.00	4677+60.00	-	2078.97	11/16/2011
4860+70.00	4862+80.00	-	2094.73	11/16/2011
4999+00.00	5002+00.00	-	2029.71	11/16/2011
5007+00.00	5008+50.00	-	2029.71	11/16/2011
5013+50.00	5015+20.00	-	2029.24	11/16/2011
5026+00.00	5026+70.00	-	2029.24	11/16/2011

GRADE RAISE - RIPRAP RIGHT
Sta 4666+60.00 to 4667+00.00
Sta 4677+40.00 to 4677+60.00
Sta 4860+70.00 to 4862+80.00
Sta 4999+00.00 to 5002+00.00
Sta 5007+00.00 to 5008+50.00
Sta 5013+50.00 to 5015+20.00
Sta 5026+00.00 to 5026+70.00

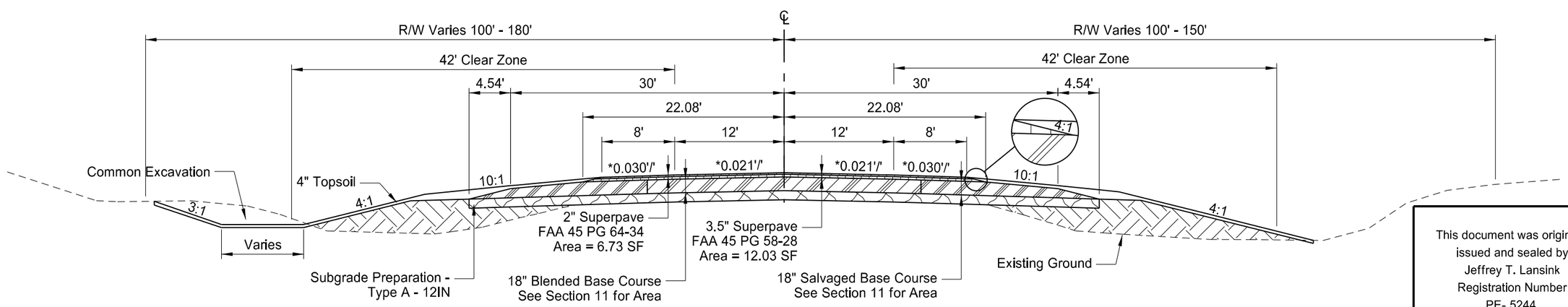

GRADE RAISE - GRADE TRANSITION
Sta 4680+10.00 to 4683+40.00
Sta 4701+10.00 to 4703+50.00
Sta 4729+60.00 to 4732+90.00
Sta 4845+90.00 to 4849+10.00
Sta 4989+60.00 to 4992+10.00
Sta 5029+40.00 to 5032+00.00

This document was originally issued and sealed by Jeffrey T. Lansink Registration Number PE- 5244, on 11/3/15 and the original document is stored at the North Dakota Department of Transportation

Typical Sections
Proposed

ND 23 - ND 28 to County Rd 13

*Note: See Section 11 for Superelevation Data

STATE	PROJECT NO.	SECTION NO.	SHEET NO.
ND	SOIB-SOI-4-023(019)087	30	8

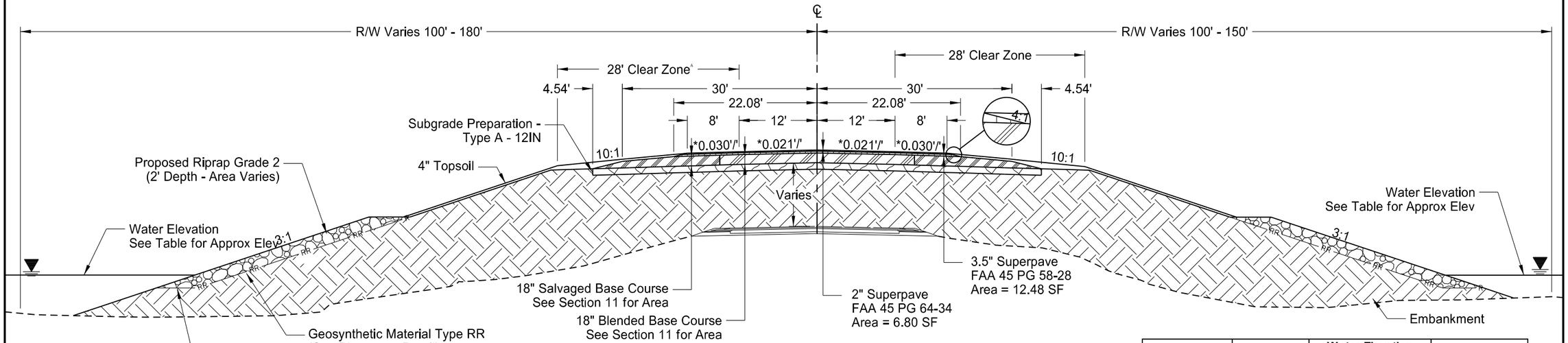

GRADE RAISE - RIPRAP
Sta 4667+00.00 to 4677+40.00
Sta 4718+30.00 to 4721+00.00
Sta 4849+20.00 to 4852+60.00
Sta 4855+40.00 to 4860+70.00
Sta 5002+00.00 to 5007+00.00
Sta 5015+20.00 to 5026+00.00

Begin Station	End Station	Water Elevation		Date Surveyed
		Left	Right	
4704+80.00	4709+30.00	2093.39	-	11/16/2011
4713+40.00	4715+90.00	2093.39	-	11/16/2011
4849+10.00	4849+20.00	2094.71	-	11/16/2011

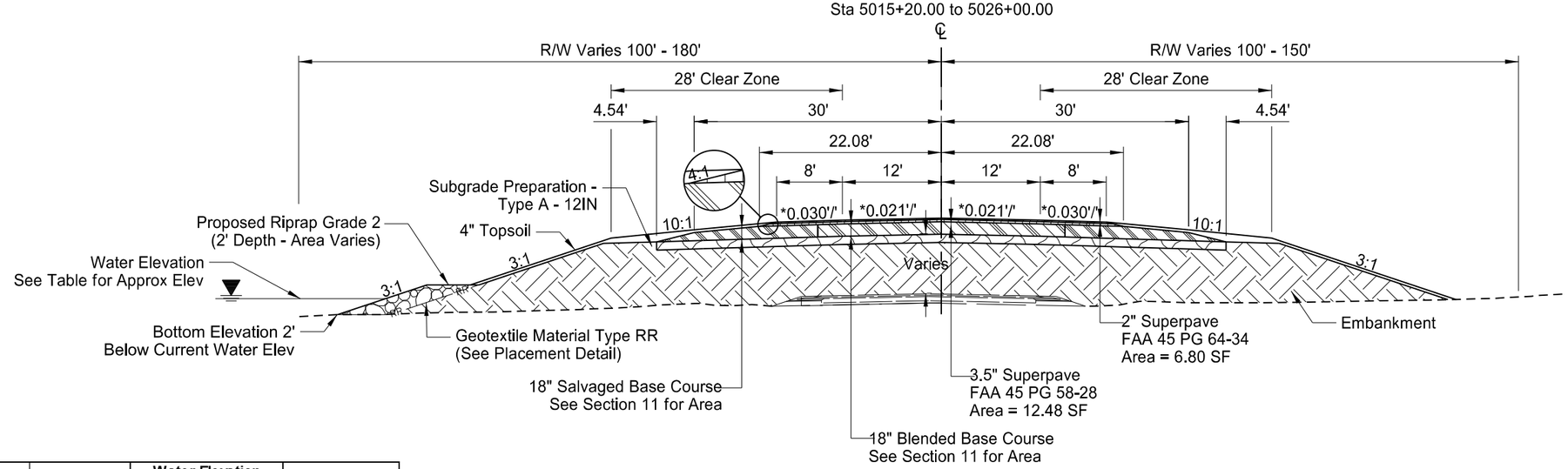

GRADE RAISE - RIPRAP LEFT
Sta 4704+80.00 to 4709+30.00
Sta 4713+40.00 to 4715+90.00
Sta 4849+10.00 to 4849+20.00

Begin Station	End Station	Water Elevation		Date Surveyed
		Left	Right	
4667+00.00	4677+40.00	2078.98	2078.97	11/16/2011
4718+30.00	4721+00.00	2093.39	2093.36	11/16/2011
4849+20.00	4852+60.00	2094.71	2094.73	11/16/2011
4855+40.00	4860+70.00	2094.71	2094.73	11/16/2011
5002+00.00	5007+00.00	2029.85	2029.71	11/16/2011
5015+20.00	5026+00.00	2029.27	2029.24	11/16/2011

*Note: See Section 11 for Superelevation Data.
A: 36.4' Clear Zone Sta. 5002+00.00 to Sta.5007+00.00

This document was originally issued and sealed by Jeffrey T. Lansink Registration Number PE- 5244, on 11/3/15 and the original document is stored at the North Dakota Department of Transportation

Typical Sections
Proposed Grade Raise

ND 23 - ND 28 to County Rd 13

STATE	PROJECT NO.	SECTION NO.	SHEET NO.
ND	SOIB-SOI-4-023(019)087	30	9

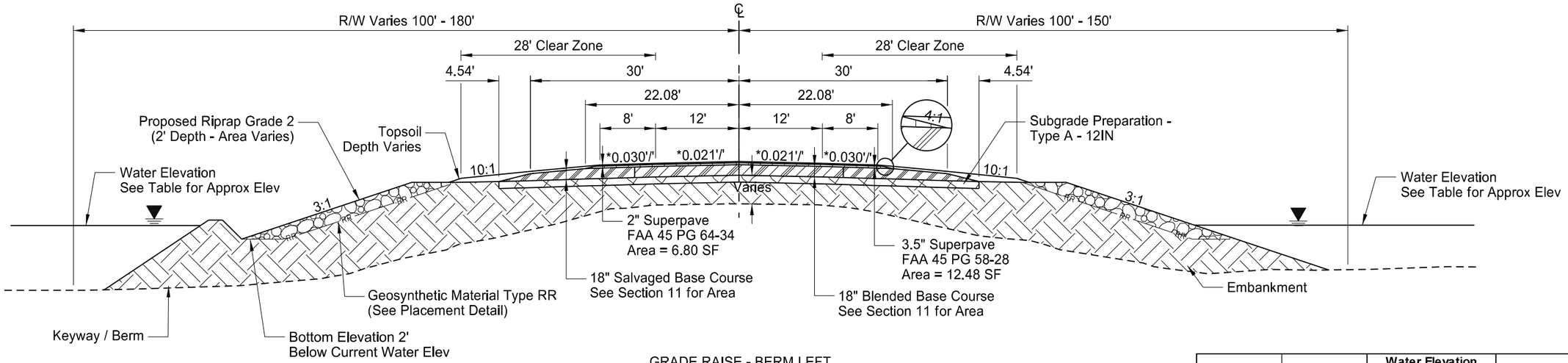

GRADE RAISE - BERM LEFT
Sta 4854+70.00 to 4855+40.00

Begin Station	End Station	Water Elevation		Date Surveyed
		Left	Right	
4854+70.00	4855+40.00	2094.71	2094.73	11/16/2011

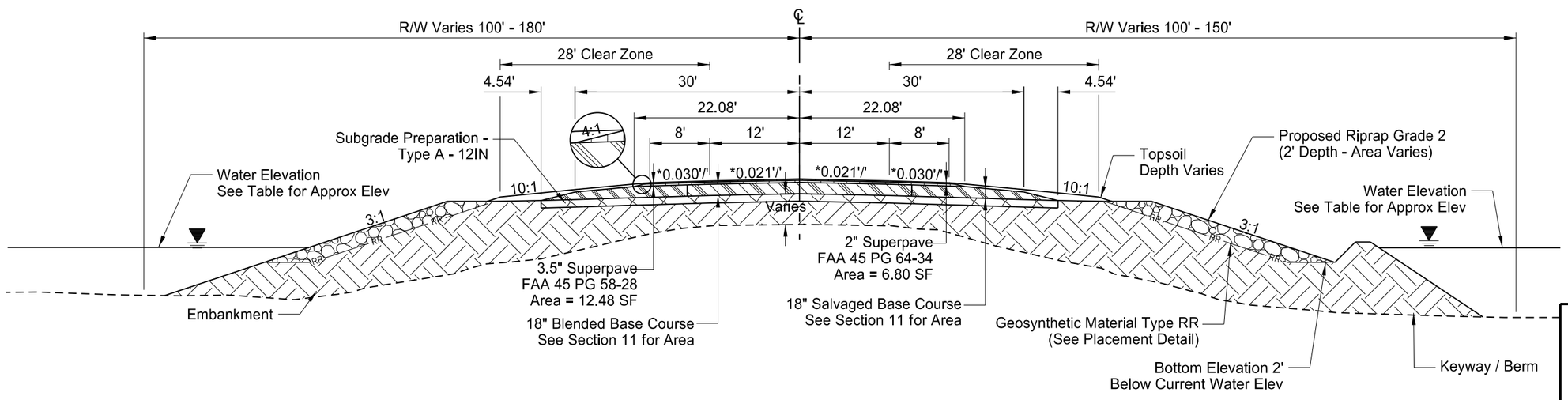

GRADE RAISE - BERM RIGHT
Sta 4716+00.00 to 4718+30.00

Begin Station	End Station	Water Elevation		Date Surveyed
		Left	Right	
4716+00.00	4718+30.00	2093.39	2093.36	11/16/2011

*Note: See Section 11 for Superelevation Data.
A: 36.4' Clear Zone Sta. 5002+00.00 to Sta.5007+00.00

This document was originally issued and sealed by Jeffrey T. Lansink Registration Number PE- 5244, on 11/3/15 and the original document is stored at the North Dakota Department of Transportation

Typical Sections
Grade Raise

ND 23 - ND 28 to County Rd 13

STATE	PROJECT NO.	SECTION NO.	SHEET NO.
ND	SOIB-SOI-4-023(019)087	30	10

TYPICAL SECTIONS (PROPOSED GRADE RAISE)

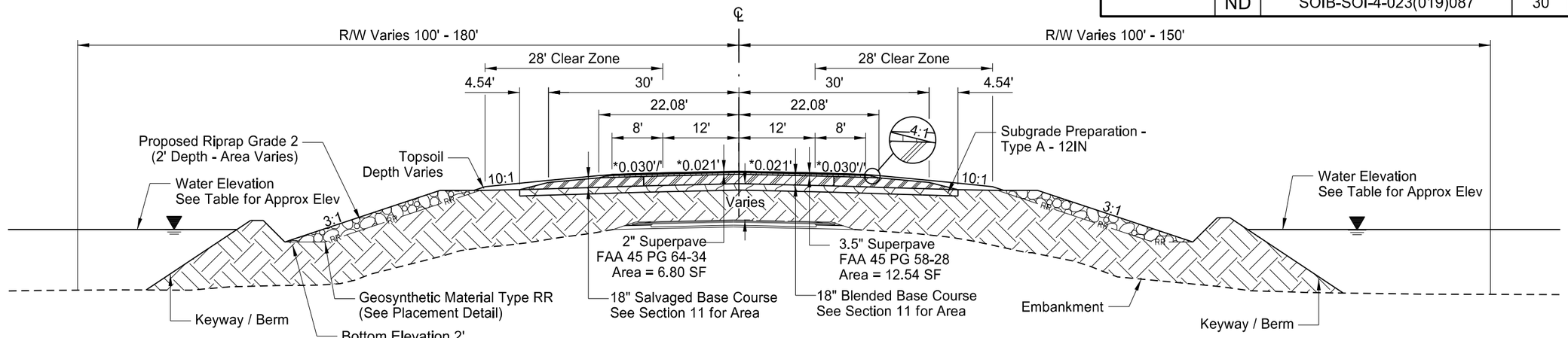

GRADE RAISE - BERM
Sta 4852+60.00 to 4854+70.00

Begin Station	End Station	Water Elevation		Date Surveyed
		Left	Right	
4852+60.00	4854+70.00	2094.71	2094.73	11/16/2011

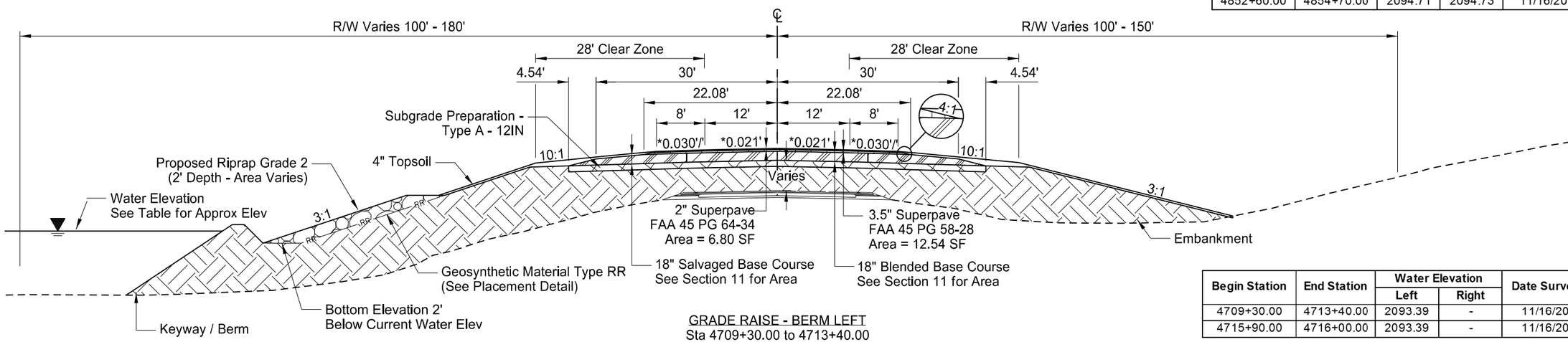

GRADE RAISE - BERM LEFT
Sta 4709+30.00 to 4713+40.00
Sta 4715+90.00 to 4716+00.00

Begin Station	End Station	Water Elevation		Date Surveyed
		Left	Right	
4709+30.00	4713+40.00	2093.39	-	11/16/2011
4715+90.00	4716+00.00	2093.39	-	11/16/2011

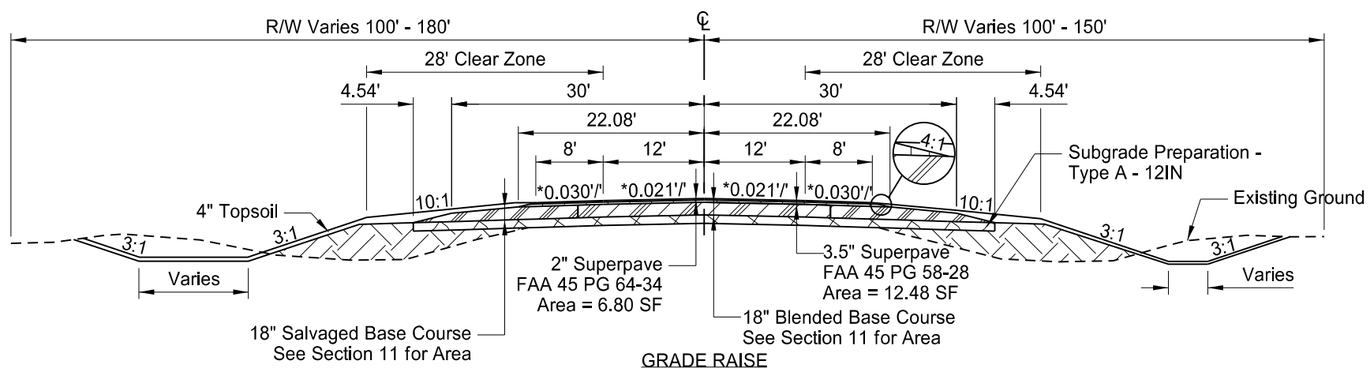

GRADE RAISE
Sta 4665+05.00 to 4666+60.00
Sta 4677+60.00 to 4680+10.00
Sta 4721+00.00 to 4726+50.00
Sta 4993+20.00 to 4999+00.00
Sta 5008+50.00 to 5013+50.00
Sta 5026+70.00 to 5028+70.00

*Note: See Section 11 for Superelevation Data

This document was originally issued and sealed by Jeffrey T. Lansink Registration Number PE- 5244, on 11/3/15 and the original document is stored at the North Dakota Department of Transportation

Typical Sections
Grade Raise

ND 23 - ND 28 to County Rd 13

STATE	PROJECT NO.	SECTION NO.	SHEET NO.
ND	SOIB-SOI-4-023(019)087	30	11

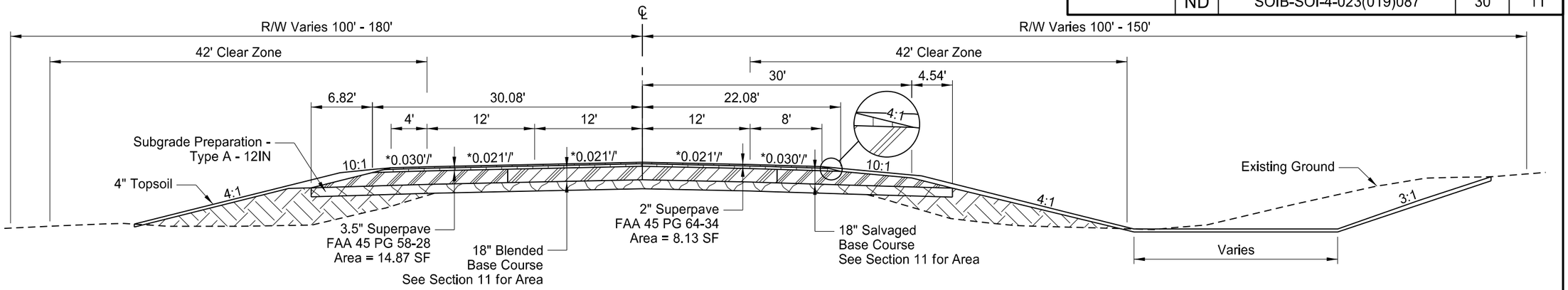

GRADE RAISE - GRADE TRANSITION (WB PASSING LANE)
Sta 4796+30.00 to 4799+60.00
Sta 4815+20.00 to 4817+60.00

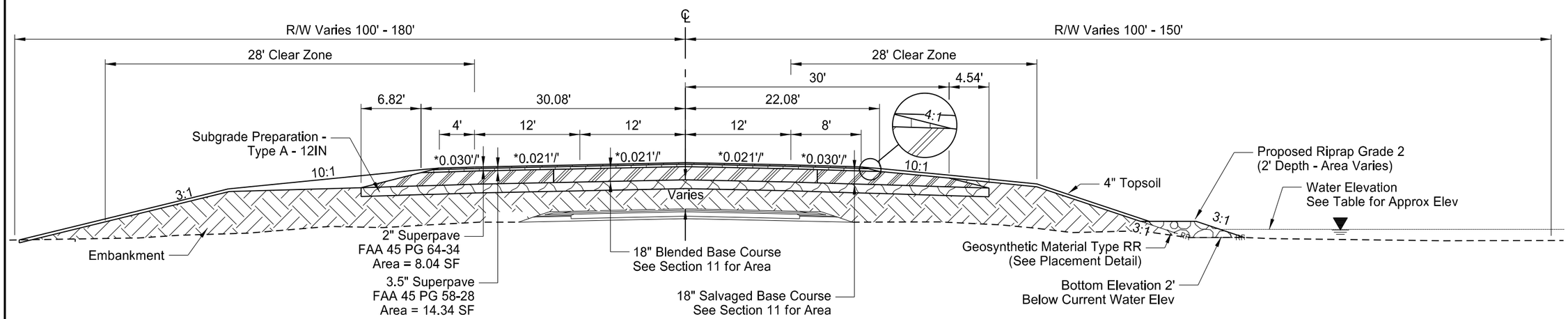

GRADE RAISE - RIPRAP RIGHT (WB PASSING LANE)
Sta 4799+60.00 to 4800+20.00
Sta 4812+40.00 to 4815+20.00

Begin Station	End Station	Water Elevation		Date Surveyed
		Left	Right	
4799+60.00	4800+20.00	-	2110.59	11/16/2011
4812+40.00	4815+20.00	-	2110.59	11/16/2011

This document was originally issued and sealed by Jeffrey T. Lansink Registration Number PE- 5244, on 11/3/15 and the original document is stored at the North Dakota Department of Transportation

Typical Sections
Proposed

ND 23 - ND 28 to County Rd 13

*Note: See Section 11 for Superelevation Data

STATE	PROJECT NO.	SECTION NO.	SHEET NO.
ND	SOIB-SOI-4-023(019)087	30	12

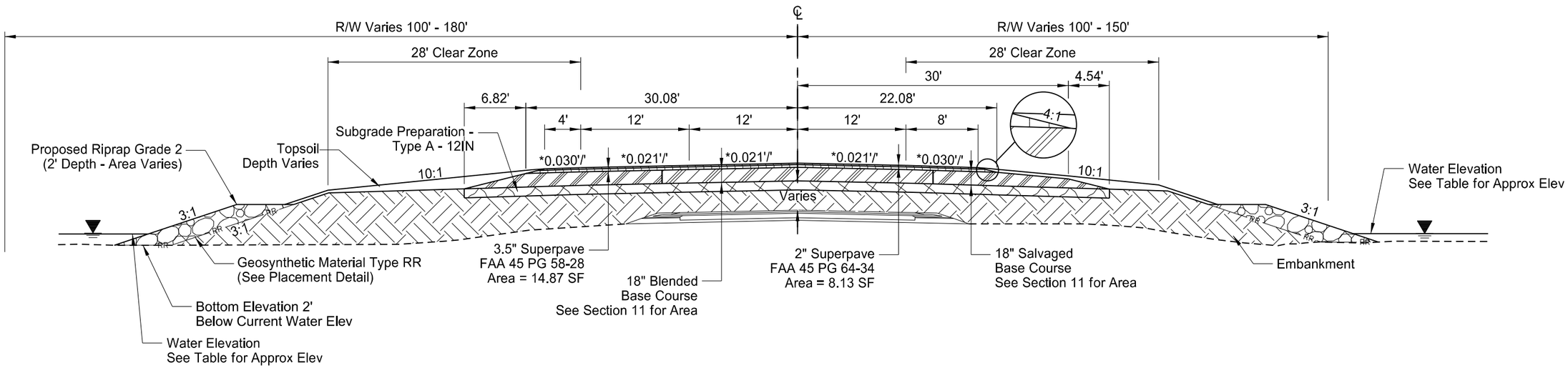

GRADE RAISE - RIPRAP (WB PASSING LANE)
Sta 4800+20.00 to 4804+30.00
Sta 4807+80.00 to 4812+40.00

Begin Station	End Station	Water Elevation		Date Surveyed
		Left	Right	
4800+20.00	4804+30.00	2110.53	2110.59	11/16/2011
4807+80.00	4812+40.00	2110.53	2110.59	11/16/2011

This document was originally issued and sealed by Jeffrey T. Lansink Registration Number PE- 5244, on 11/3/15 and the original document is stored at the North Dakota Department of Transportation

Typical Sections
Proposed Grade Raise

ND 23 - ND 28 to County Rd 13

*Note: See Section 11 for Superelevation Data

STATE	PROJECT NO.	SECTION NO.	SHEET NO.
ND	SOIB-SOI-4-023(019)087	30	13

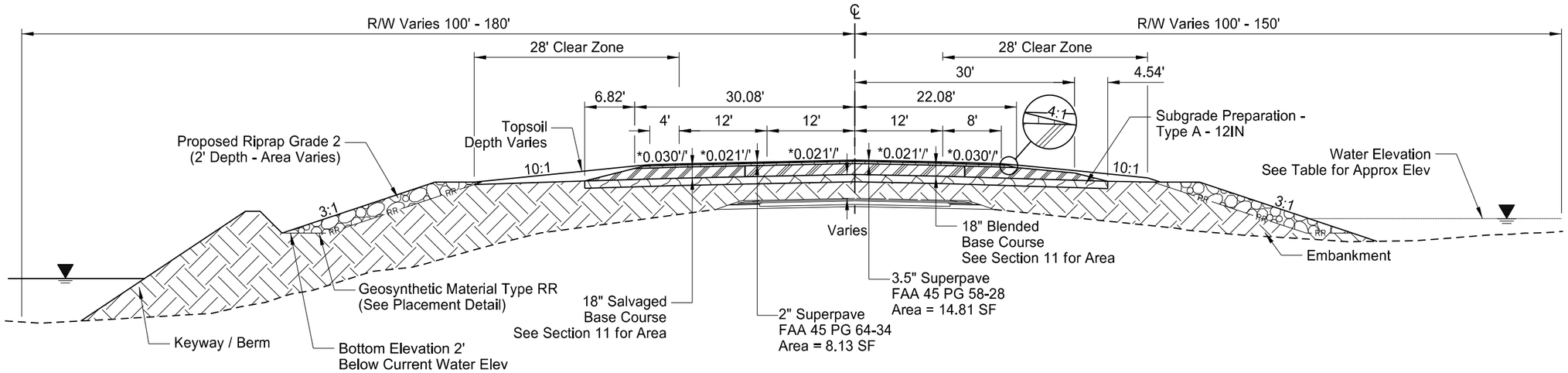

GRADE RAISE - BERM LEFT (WB PASSING LANE)
Sta 4804+30.00 to 4804+40.00
Sta 4807+40.00 to 4807+80.00

Begin Station	End Station	Water Elevation		Date Surveyed
		Left	Right	
4804+30.00	4804+40.00	2110.53	2110.59	11/16/2011
4807+40.00	4807+80.00	2110.53	2110.59	11/16/2011

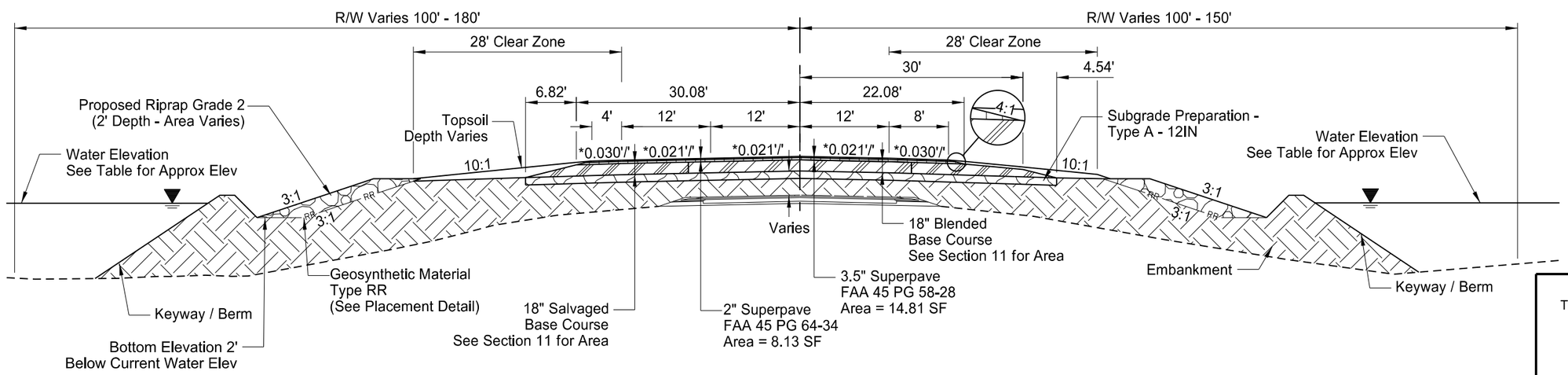

GRADE RAISE - BERM (WB PASSING LANE)
Sta 4804+40.00 to 4807+40.00

Begin Station	End Station	Water Elevation		Date Surveyed
		Left	Right	
4804+40.00	4807+40.00	2110.53	2110.59	11/16/2011

This document was originally issued and sealed by Jeffrey T. Lansink Registration Number PE- 5244, on 11/3/15 and the original document is stored at the North Dakota Department of Transportation

Typical Sections
Proposed

ND 23 - ND 28 to County Rd 13

*Note: See Section 11 for Superelevation Data

STATE	PROJECT NO.	SECTION NO.	SHEET NO.
ND	SOIB-SOI-4-023(019)087	30	14

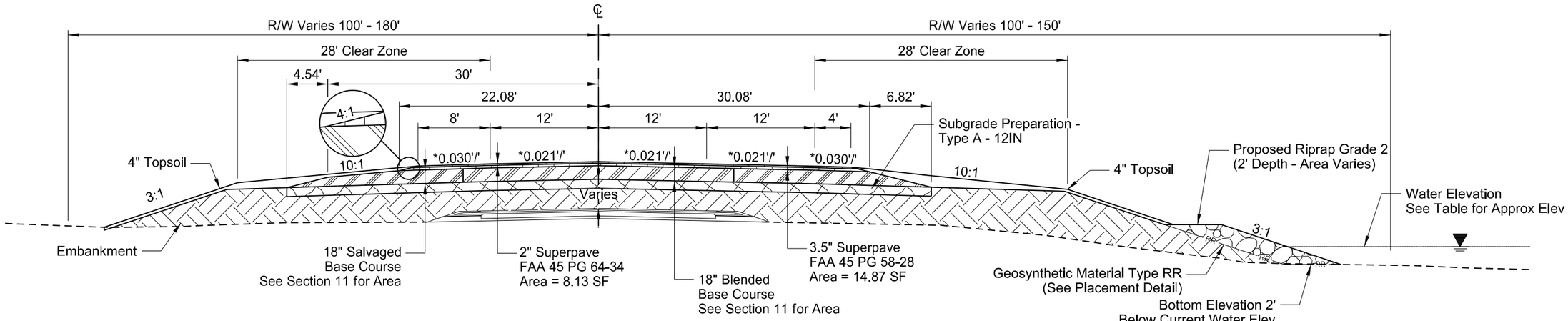

GRADE RAISE - RIPRAP RIGHT (EB PASSING LANE)
Sta 4862+80.00 to 4865+40.00

Begin Station	End Station	Water Elevation		Date Surveyed
		Left	Right	
4862+80.00	4865+40.00	-	2094.73	11/16/2011

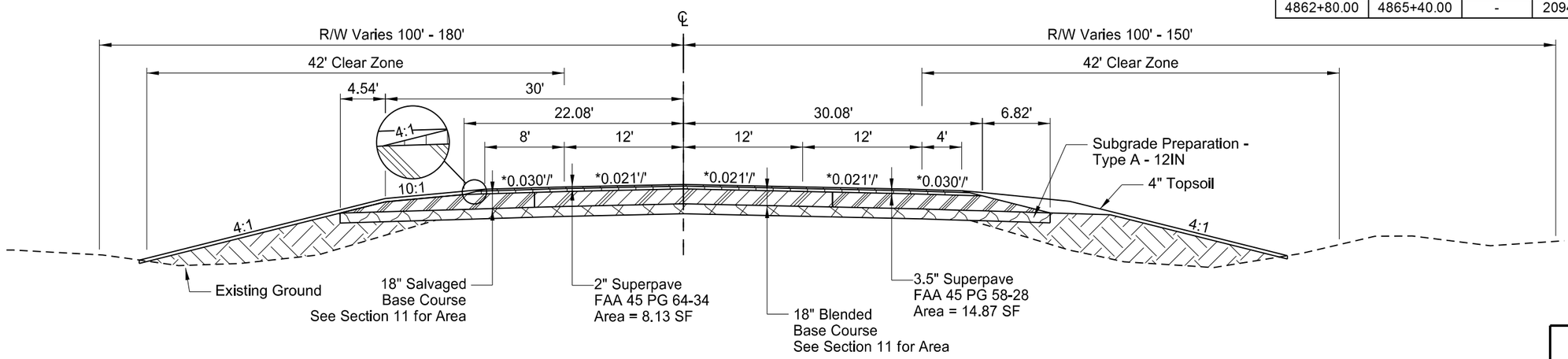

GRADE RAISE - GRADE TRANSITION (EB PASSING LANE)
Sta 4865+40.00 to 4868+20.00

This document was originally issued and sealed by Jeffrey T. Lansink Registration Number PE- 5244, on 11/3/15 and the original document is stored at the North Dakota Department of Transportation

Typical Sections
Proposed

ND 23 - ND 28 to County Rd 13

STATE	PROJECT NO.	SECTION NO.	SHEET NO.
ND	SOIB-SOI-4-023(019)087	30	15

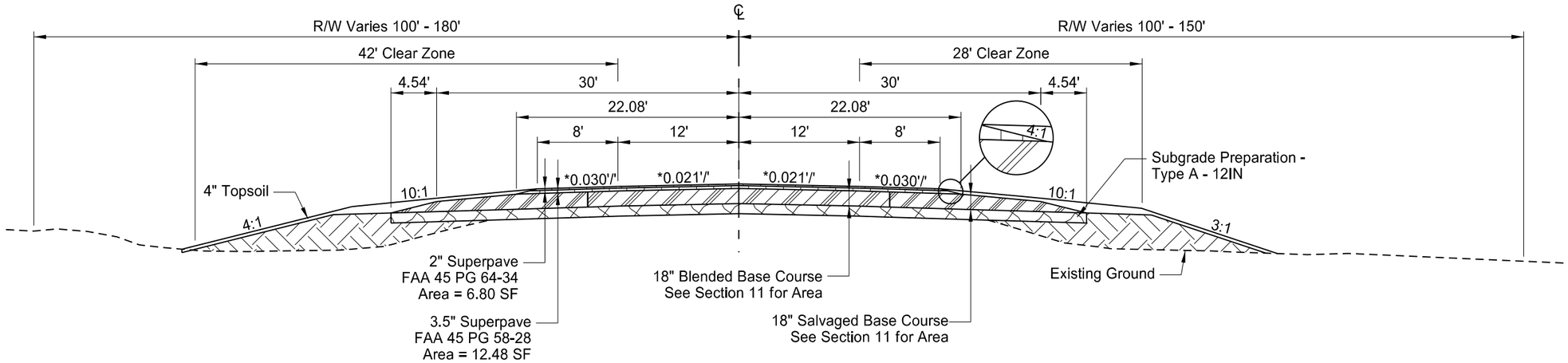

GRADE RAISE - GRADE TRANSITION LEFT
Sta 4664+95.00 to 4665+05.00
Sta 5028+70.00 to 5029+40.00

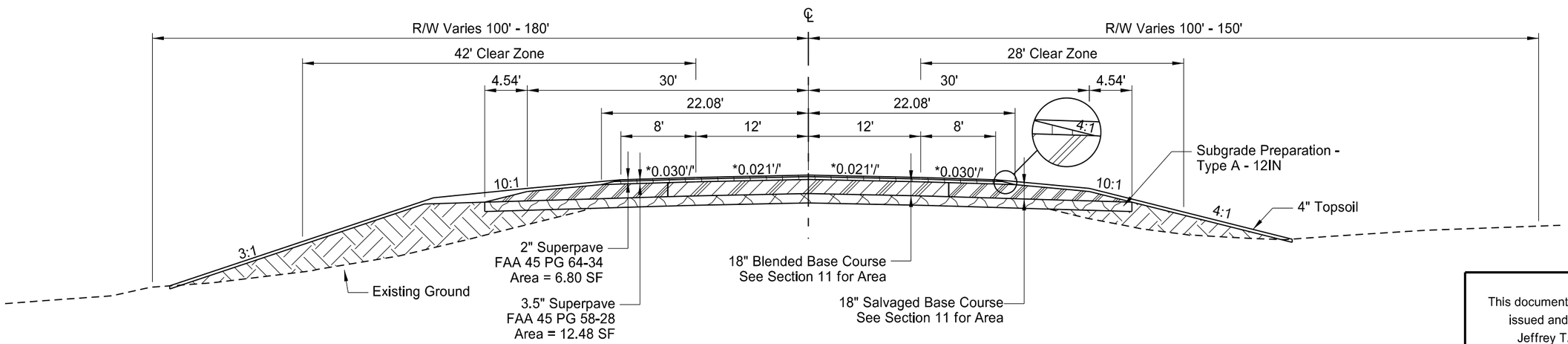

GRADE RAISE - GRADE TRANSITION RIGHT
Sta 4703+50.00 to 4704+80.00
Sta 4726+50.00 to 4729+60.00
Sta 4992+10.00 to 4993+20.00

This document was originally issued and sealed by Jeffrey T. Lansink Registration Number PE- 5244, on 11/3/15 and the original document is stored at the North Dakota Department of Transportation

Typical Sections
Proposed

ND 23 - ND 28 to County Rd 13

STATE	PROJECT NO.	SECTION NO.	SHEET NO.
ND	SOIB-SOI-4-023(019)087	50	1

Hydraulic Data for SOIB-SOI-4-023(019)087 (A)

Begin Sta	RP	Existing Pipe	Proposed Pipe	Drainage Area	25 Year Design Data				100 Year Data	
					Design Discharge	Design Headwater	Design Velocity	Design Stage (NAVD 88)	100-Year Discharge	100-Year Stage (NAVD 88)
				(acres)	(cfs)	(Ft.)	(fps)	(Ft.)	(cfs)	(Ft.)
4632+71	87.741	30" RCP	30	3.14	3.42	0.94	1.42	2112.60	5.64	2112.83
4645+78	87.988	24" RCP	24	12.12	7.05	1.49	4.87	2124.56	11.91	2125.10
4670+76	88.461	30" RCP	30	N/A	N/A	N/A	N/A	N/A	N/A	N/A
4685+98	88.750	48" X 72" RCE	48 X 72"	N/A	N/A	N/A	N/A	N/A	N/A	N/A
4686+68	88.763	30" RCP	30	5.81	7.15	1.21	7.33	2099.66	11.34	2100.04
4696+18	88.943	30" RCP	30	6.84	8.42	0.87	10.38	2108.02	13.28	2108.39
4714+17	89.284	24" RCP	30	18.60	11.79	1.57	12.91	2097.32	19.39	2097.86
4718+38	89.363	30" RCP	30	14.32	10.40	4.30	2.22	2089.97	17.00	2090.39
4737+77	89.730	24" RCP	30	51.27	12.26	1.83	5.44	2092.82	21.84	2093.58
4744+17	89.852	48" X 72" RCE	48 X 72"	N/A	N/A	N/A	N/A	N/A	N/A	N/A
4787+68	90.676	30" RCP	30	4.75	4.89	4.18	1.00	2125.35	7.98	2125.42
4806+38	91.030	24" RCP	30	N/A	N/A	N/A	N/A	N/A	N/A	N/A
4820+15	91.291	48" X 72" RCE	48 X 72"	23.40	9.81	1.15	5.46	2115.69	16.81	2116.19
4843+56	91.734	24" RCP	24	17.15	8.58	1.76	10.76	2111.83	14.56	2112.58
4853+38	91.920	30" RCP	30	N/A	N/A	N/A	N/A	N/A	N/A	N/A
4875+15	92.332	30" RCP	30	74.69	22.86	2.34	4.71	2085.64	38.95	2086.54
4903+15	92.863	24" RCP	30	6.13	5.37	2.43	1.09	2084.22	8.86	2084.30
4915+86	93.103	30" RCP	30	10.10	8.06	0.91	6.90	2072.38	13.19	2072.77
4928+16	93.336	24" RCP	30	47.90	23.98	3.60	4.89	2060.75	39.16	2062.11
4957+36	93.889	24" RCP	30	3.12	3.61	0.57	6.24	2046.59	5.91	2046.79
4968+66	94.103	30" RCP	30	58.07	24.11	7.10	4.91	2036.88	39.98	2038.73
4995+16	94.605	24" RCP	30	8.97	7.77	0.92	7.88	2036.64	12.65	2037.01
5004+16	94.776	24" RCP	30	18.09	12.54	2.07	3.42	2030.56	20.42	2031.09
5016+29	95.005	48" X 72" RCE	48 X 72"	325.70	43.80	1.74	8.10	2031.17	77.94	2032.41
5020+28	95.081	24" RCP	30	325.70	43.80	5.80	5.15	2031.17	77.94	2029.77
5044+28	95.536	30" RCP	30	73.71	29.36	5.93	6.88	2047.13	48.49	2050.80

(A) Hydraulic data provided is for smooth-walled type conduits
(B) Pipes listed with data N/A are equalizer pipes so data is not applicable

This document was originally issued and sealed by Jeffrey T. Lansink Registration Number PE- 5244, on 11/3/15 and the original document is stored at the North Dakota Department of Transportation

Hydraulic Data

ND 23 - ND 28 to County Rd 13

STATE	PROJECT NO.	SECTION NO.	SHEET NO.
ND	SOIB-SOI-4-023(019)087	51	1

Plan & Profile Sheet Number	Begin Station / Location	Begin Offset (B)	End Station / Location	End Offset (B)	Pipe Installation (Pay Item)			Allowable Material	Required Diameter	Steel Pipe Coatings	Steel Pipe Corrugations or Sprial Ribs	Steel Pipe Minimum Thickness	R1 Fabric (Pay Item)	(*) End Sections Begin	End	Applicable Backfill Detail
					In	Bid Item	LF		In	Type		In	SY	EA	EA	
2	4632+09	97' Rt	4632+04	83' Rt	30	Pipe Conc. Reinf. CL III (Extension)	14	Reinforced Concrete Pipe - Class III (**barrel length = 14 LF**)	30				45	Y - Flared	N	20-2
2	4632+66	86' Lt	4632+68	92' Lt	30	Pipe Conc. Reinf. CL III (Extension)	6	Reinforced Concrete Pipe - Class III (**barrel length = 6 LF**)	30				58	Y - Flared	N	20-1
3	4645+78	38' Lt	4645+78	46' Rt	24	Pipe Conduit	82	Reinforced Concrete Pipe - Class III (**barrel length = 80 LF**)	24				456	Y - Traversable (4:1) (A)	Y - Traversable (4:1) (A)	D-714-26
								Corrugated Steel Pipe	24	A, P	2	0.064				
								Spiral Rib Steel Pipe	24	A, P	3/4, 1	0.064				
4	4661+58	62' Rt	4662+12	62' Rt	24	Pipe Conduit - Approach	54	Reinforced Concrete Pipe - Class III (**barrel length = 52 LF**)	24					Y - Traversable (6:1) (A)	Y - Traversable (6:1) (A)	D-203-08
								Corrugated Steel Pipe	24	Z, A, P	2	0.064				
								Spiral Rib Steel Pipe	24	Z, A, P	3/4, 1	0.064				
								High-Density Polyethylene (HDPE)	24			Man Recom				
4	4670+76	108' Lt	4670+76	110' Rt	30	Pipe Conduit	210	Reinforced Concrete Pipe - Class IV (**barrel length = 206 LF**)	30				2050	Y - Flared (A)	Y - Flared (A)	D-714-25
								Corrugated Steel Pipe	30	A, P	2	0.064				
								Spiral Rib Steel Pipe	30	A, P	3/4, 1	0.064				
5	4685+98	30' Lt	4685+98	54' Lt	48 X 72	Cattle Pass Conc Intermed Section	24	Cattle Pass Conc Intermediate Section (**barrel length = 24 LF**)	48 x 72				143	Y - Remove & Reset	N	20-4
5	4685+98	28' Rt	4685+98	54' Rt	48 X 72	Cattle Pass Conc Intermed Section	26	Cattle Pass Conc Intermediate Section (**barrel length = 26 LF**)	48 x 72				155	Y - Remove & Reset	N	20-4
5	4686+68	63' Lt	4686+68	87' Lt	30	Pipe Conc. Reinf. CL III (Extension)	24	Reinforced Concrete Pipe - Class III (**barrel length = 24 LF**)	30				77	Y - Flared	N	20-1
5	4686+68	55' Rt	4686+68	77' Rt	30	Pipe Conc. Reinf. CL III (Extension)	22	Reinforced Concrete Pipe - Class III (**barrel length = 22 LF**)	30				71	Y - Flared	N	20-1
5	4696+18	56' Lt	4696+18	74' Lt	30	Pipe Conc. Reinf. CL III (Extension)	18	Reinforced Concrete Pipe - Class III (**barrel length = 18 LF**)	30				58	Y - Flared	N	20-1
5	4696+18	42' Rt	4696+18	62' Rt	30	Pipe Conc. Reinf. CL III (Extension)	20	Reinforced Concrete Pipe - Class III (**barrel length = 20 LF**)	30				64	Y - Flared	N	20-1
6	4714+17	92' Lt	4714+17	64' Rt	30	Pipe Conduit	148	Reinforced Concrete Pipe - Class II (**barrel length = 144 LF**)	30				853	Y - Flared (A)	Y - Flared (A)	D-714-25
								Corrugated Steel Pipe	30	A, P	2	0.064				
								Spiral Rib Steel Pipe	30	A, P	3/4, 1	0.064				
6	4718+38	100' Lt	4718+38	96' Rt	30	Pipe Conduit	188	Reinforced Concrete Pipe - Class IV (**barrel length = 184 LF**)	30				1565	Y - Flared (A)	Y - Flared (A)	D-714-25
								Corrugated Steel Pipe	30	A, P	2	0.064				
								Spiral Rib Steel Pipe	30	A, P	3/4, 1	0.064				
7	4737+77	68' Lt	4737+77	68' Rt	30	Pipe Conduit	128	Reinforced Concrete Pipe - Class II (**barrel length = 124 LF**)	30				610	Y - Flared (A)	Y - Flared (A)	D-714-25
								Corrugated Steel Pipe	30	A, P	2	0.064				
								Spiral Rib Steel Pipe	30	A, P	3/4, 1	0.064				
8	4744+17	28' Rt	4744+17	54' Rt	48 X 72	Cattle Pass Conc Intermed Section	26	Cattle Pass Conc Intermediate Section (**barrel length = 26 LF**)	48 x 72				155	Y - Remove & Reset	N	20-5
8	4744+17	28' Lt	4744+17	54' Lt	48 X 72	Cattle Pass Conc Intermed Section	26	Cattle Pass Conc Intermediate Section (**barrel length = 26 LF**)	48 x 72				155	Y - Remove & Reset	N	20-5
8	4747+07	60' Lt	4747+63	60' Lt	24	Pipe Conduit - Approach	56	Reinforced Concrete Pipe - Class III (**barrel length = 52 LF**)	24					Y - Flared (A)	Y - Flared (A)	D-203-08
								Corrugated Steel Pipe	24	Z, A, P	2	0.064				
								Spiral Rib Steel Pipe	24	Z, A, P	3/4, 1	0.064				
								High-Density Polyethylene (HDPE)	24			Man Recom				

Coatings: **Z** = Zinc
A = Aluminum
P = Polymeric (over Zinc or Aluminum)

Corrugations: **2** = 2-2/3"x1/2"
3 = 3"x1"
5 = 5"x1"

Spiral Ribs: **3/4** = 3/4"x3/4"@7-1/2"
1 = 3/4"x1"@11-1/2"

(*) The price bid for "Pipe Conduit" bid items includes end sections. Pipe Extensions shall pay for end sections seperately.
FES = Flared End Section
TES = Traversable End Section
(B) For pipe extension, "Begin Offset" refers to opening of existing end section,
End Offset refers to location of opening of proposed end section.

This document was originally issued and sealed by Jeffrey T. Lansink Registration Number PE- 5244, on 11/3/15 and the original document is stored at the North Dakota Department of Transportation

Allowable Pipe List

ND 23 - ND 28 to County Rd 13

STATE	PROJECT NO.	SECTION NO.	SHEET NO.
ND	SOIB-SOI-4-023(019)087	51	2

Plan & Profile Sheet Number	Begin Station / Location	Begin Offset (B)	End Station / Location	End Offset (B)	Pipe Installation (Pay Item)			Allowable Material	Required Diameter	Steel Pipe Coatings	Steel Pipe Corrugations or Sprial Ribs	Steel Pipe Minimum Thickness	R1 Fabric (Pay Item)	(*) End Sections Begin	End	Applicable Backfill Detail
					In	Bid Item	LF		In	Type		In	SY	EA	EA	
8	4747+08	54' Rt	4747+64	54' Rt	24	Pipe Conduit - Approach	56	Reinforced Concrete Pipe - Class III (**barrel length = 52 LF**)	24					Y - Flared (A)	Y - Flared (A)	D-203-08
								Corrugated Steel Pipe	24	Z, A, P	2	0.064				
								Spiral Rib Steel Pipe	24	Z, A, P	3/4, 1	0.064				
								High-Density Polyethylene (HDPE)	24			Man Recom				
9	4767+06	61' Lt	4767+98	60' Lt	24	Pipe Conduit - Approach	92	Reinforced Concrete Pipe - Class III (**barrel length = 88 LF**)	24					Y - Flared (A)	Y - Flared (A)	D-203-08
								Corrugated Steel Pipe	24	Z, A, P	2	0.064				
								Spiral Rib Steel Pipe	24	Z, A, P	3/4, 1	0.064				
								High-Density Polyethylene (HDPE)	24			Man Recom				
9	4767+18	64' Rt	4767+82	64' Rt	24	Pipe Conduit - Approach	64	Reinforced Concrete Pipe - Class III (**barrel length = 60 LF**)	24					Y - Flared (A)	Y - Flared (A)	D-203-08
								Corrugated Steel Pipe	24	Z, A, P	2	0.064				
								Spiral Rib Steel Pipe	24	Z, A, P	3/4, 1	0.064				
								High-Density Polyethylene (HDPE)	24			Man Recom				
10	4787+68	67' Lt	4787+68	87' Lt	30	Pipe Conc. Reinf. CL III (Extension)	20	Reinforced Concrete Pipe - Class III (**barrel length = 20 LF**)	30				64	Y - Flared	N	20-2
10	4787+68	69' Rt	4787+68	89' Rt	30	Pipe Conc. Reinf. CL III (Extension)	20	Reinforced Concrete Pipe - Class III (**barrel length = 20 LF**)	30				64	Y - Flared	N	20-1
11	4806+38	92' Lt	4806+38	78' Rt	30	Pipe Conduit	170	Reinforced Concrete Pipe - Class III (**barrel length = 166 LF**)	30				1089	Y - Flared (A)	Y - Flared (A)	D-714-25
								Corrugated Steel Pipe	30	A, P	2	0.064				
								Spiral Rib Steel Pipe	30	A, P	3/4, 1	0.064				
12	4820+15	30' Rt	4820+15	56' Rt	48 X 72	Cattle Pass Conc Intermed Section	24	Cattle Pass Conc Intermediate Section (**barrel length = 24 LF**)	48 x 72				143	Y - Remove & Reset	N	20-4
12	4820+15	26' Lt	4820+15	69' Lt	48 X 72	Cattle Pass Conc Intermed Section	40	Cattle Pass Conc Intermediate Section (**barrel length = 40 LF**)	48 x 72				238	Y - Remove & Reset	N	20-4
13	4843+56	26' Lt	4843+56	47' Lt	24	Pipe Conc. Reinf. CL III (Extension)	20	Reinforced Concrete Pipe - Class III (**barrel length = 20 LF**)	24				62	Y - Traversable (4:1)	N	20-1
13	4843+56	34' Rt	4843+56	58' Rt	24	Pipe Conc. Reinf. CL III (Extension)	22	Reinforced Concrete Pipe - Class III (**barrel length = 22 LF**)	24				68	Y - Flared	N	20-1
13	4853+38	93' Lt	4853+38	93' Rt	30	Pipe Conduit	178	Reinforced Concrete Pipe - Class III (**barrel length = 174 LF**)	30				1353	Y - Flared (A)	Y - Flared (A)	D-714-25
								Corrugated Steel Pipe	30	A, P	2	0.064				
								Spiral Rib Steel Pipe	30	A, P	3/4, 1	0.064				
14	4860+77	68' Lt	4861+37	72' Lt	24	Pipe Conduit - Approach	60	Reinforced Concrete Pipe - Class III (**barrel length = 56 LF**)	24					Y - Flared (A)	Y - Flared (A)	D-203-08
								Corrugated Steel Pipe	24	Z, A, P	2	0.064				
								Spiral Rib Steel Pipe	24	Z, A, P	3/4, 1	0.064				
								High-Density Polyethylene (HDPE)	24			Man Recom				
14	4875+15	62' Rt	4875+15	78' Rt	30	Pipe Conc. Reinf. CL III (Extension)	16	Reinforced Concrete Pipe - Class III (**barrel length = 16 LF**)	30				52	Y - Flared	N	20-2
14	4875+15	61' Lt	4875+15	75' Lt	30	Pipe Conc. Reinf. CL III (Extension)	14	Reinforced Concrete Pipe - Class III (**barrel length = 14 LF**)	30				45	Y - Flared	N	20-1
15	4886+00	56' Lt	4886+00	68' Rt	48 X 72	Cattle Pass Conc Intermed Section	120	Cattle Pass Conc Intermediate Section (**barrel length = 116 LF**)	48 x 72				2657	Y - Flared	Y- Flared	20-4
15	4887+99	67' Rt	4888+65	67' Rt	24	Pipe Conduit - Approach	66	Reinforced Concrete Pipe - Class III (**barrel length = 62 LF**)	24					Y - Flared (A)	Y - Flared (A)	D-203-08
								Corrugated Steel Pipe	24	Z, A, P	2	0.064				
								Spiral Rib Steel Pipe	24	Z, A, P	3/4, 1	0.064				
								High-Density Polyethylene (HDPE)	24			Man Recom				

Coatings: **Z** = Zinc
A = Aluminum
P = Polymeric (over Zinc or Aluminum)

Corrugations: **2** = 2-2/3"x1/2"
3 = 3"x1"
5 = 5"x1"

Spiral Ribs: **3/4** = 3/4"x3/4"@7-1/2"
1 = 3/4"x1"@11-1/2"

(*) The price bid for "Pipe Conduit" bid items includes end sections. Pipe Extensions shall pay for end sections seperately.
FES = Flared End Section
TES = Traversable End Section
(B) For pipe extension, "Begin Offset" refers to opening of existing end section,
End Offset refers to location of opening of proposed end section.

This document was originally issued and sealed by Jeffrey T. Lansink Registration Number PE- 5244, on 11/3/15 and the original document is stored at the North Dakota Department of Transportation

Allowable Pipe List

ND 23 - ND 28 to County Rd 13

STATE	PROJECT NO.	SECTION NO.	SHEET NO.
ND	SOIB-SOI-4-023(019)087	51	3

Plan & Profile Sheet Number	Begin Station / Location	Begin Offset (B)	End Station / Location	End Offset (B)	Pipe Installation (Pay Item)			Allowable Material	Required Diameter	Steel Pipe Coatings	Steel Pipe Corrugations or Sprial Ribs	Steel Pipe Minimum Thickness	R1 Fabric (Pay Item)	(*) End Sections Begin	End	Applicable Backfill Detail
					In	Bid Item	LF		In	Type		In	SY	EA	EA	
15	4888+13	71' Lt	4888+59	71' Lt	24	Pipe Conduit - Approach	46	Reinforced Concrete Pipe - Class III (**barrel length = 42 LF**)	24					Y - Flared (A)	Y - Flared (A)	D-203-08
								Corrugated Steel Pipe	24	Z, A, P	2	0.064				
								Spiral Rib Steel Pipe	24	Z, A, P	3/4, 1	0.064				
								High-Density Polyethylene (HDPE)	24			Man Recom				
16	4903+15	73' Rt	4903+15	61' Lt	30	Pipe Conduit	126	Reinforced Concrete Pipe - Class II (**barrel length = 122 LF**)	30				560	Y - Flared (A)	Y - Flared (A)	D-714-25
								Corrugated Steel Pipe	30	A, P	2	0.064				
								Spiral Rib Steel Pipe	30	A, P	3/4, 1	0.064				
16	4915+86	58' Rt	4915+86	74' Rt	30	Pipe Conc. Reinf. CL III (Extension)	16	Reinforced Concrete Pipe - Class III (**barrel length = 16 LF**)	30				52	Y - Flared	N	20-2
16	4915+86	60' Lt	4915+86	78' Lt	30	Pipe Conc. Reinf. CL III (Extension)	18	Reinforced Concrete Pipe - Class III (**barrel length = 18 LF**)	30				58	Y - Flared	N	20-1
17	4922+90	79' Lt	4923+68	78' Lt	24	Pipe Conduit - Approach	78	Reinforced Concrete Pipe - Class III (**barrel length = 74 LF**)	24					Y - Flared (A)	Y - Flared (A)	D-203-08
								Corrugated Steel Pipe	24	Z, A, P	2	0.064				
								Spiral Rib Steel Pipe	24	Z, A, P	3/4, 1	0.064				
								High-Density Polyethylene (HDPE)	24			Man Recom				
17	4922+94	60' Rt	4923+62	60' Rt	24	Pipe Conduit - Approach	68	Reinforced Concrete Pipe - Class III (**barrel length = 66 LF**)	24					Y - Traversable (6:1) (A)	Y - Traversable (6:1) (A)	D-203-08
								Corrugated Steel Pipe	24	Z, A, P	2	0.064				
								Spiral Rib Steel Pipe	24	Z, A, P	3/4, 1	0.064				
								High-Density Polyethylene (HDPE)	24			Man Recom				
17	4928+16	59' Lt	4928+16	60' Rt	30	Pipe Conduit	114	Reinforced Concrete Pipe - Class II (**barrel length = 110 LF**)	30				572	Y - Flared (A)	Y - Traversable (4:1) (A)	D-714-25
								Corrugated Steel Pipe	36	A, P	2	0.064				
								Spiral Rib Steel Pipe	36	A, P	3/4, 1	0.064				
17	4933+08	61' Lt	4933+74	61' Lt	24	Pipe Conduit - Approach	66	Reinforced Concrete Pipe - Class III (**barrel length = 62 LF**)	24					Y - Flared (A)	Y - Flared (A)	D-203-08
								Corrugated Steel Pipe	30	Z, A, P	2	0.064				
								Spiral Rib Steel Pipe	30	Z, A, P	3/4, 1	0.064				
								High-Density Polyethylene (HDPE)	30			Man Recom				
18	4947+21	62' Rt	4947+90	65' Rt	24	Pipe Conduit - Approach	70	Reinforced Concrete Pipe - Class III (**barrel length = 66 LF**)	24					Y - Flared (A)	Y - Flared (A)	D-203-08
								Corrugated Steel Pipe	24	Z, A, P	2	0.064				
								Spiral Rib Steel Pipe	24	Z, A, P	3/4, 1	0.064				
								High-Density Polyethylene (HDPE)	24			Man Recom				
18	4957+36	71' Rt	4957+36	61' Lt	30	Pipe Conduit	124	Reinforced Concrete Pipe - Class II (**barrel length = 120 LF**)	30				521	Y - Flared (A)	Y - Flared (A)	D-714-25
								Corrugated Steel Pipe	30	A, P	2	0.064				
								Spiral Rib Steel Pipe	30	A, P	3/4, 1	0.064				
19	4968+66	59' Lt	4968+66	75' Lt	30	Pipe Conc. Reinf. CL III (Extension)	16	Reinforced Concrete Pipe - Class III (**barrel length = 16 LF**)	30				52	Y - Flared	N	20-1
19	4968+66	60' Rt	4968+66	78' Rt	30	Pipe Conc. Reinf. CL III (Extension)	18	Reinforced Concrete Pipe - Class III (**barrel length = 18 LF**)	30				58	Y - Flared	N	20-1
20	4995+16	69' Lt	4995+16	54' Rt	30	Pipe Conduit	118	Reinforced Concrete Pipe - Class II (**barrel length = 114 LF**)	30				387	Y - Flared (A)	Y - Traversable (4:1) (A)	D-714-25
								Corrugated Steel Pipe	30	A, P	2	0.064				
								Spiral Rib Steel Pipe	30	A, P	3/4, 1	0.064				
20	4998+24	65' Rt	4998+89	66' Rt	24	Pipe Conduit - Approach	62	Reinforced Concrete Pipe - Class III (**barrel length = 58 LF**)	24					Y - Flared (A)	Y - Flared (A)	D-203-08
								Corrugated Steel Pipe	24	Z, A, P	2	0.064				
								Spiral Rib Steel Pipe	24	Z, A, P	3/4, 1	0.064				
								High-Density Polyethylene (HDPE)	24			Man Recom				

Coatings: **Z** = Zinc
A = Aluminum
P = Polymeric (over Zinc or Aluminum)

Corrugations: **2** = 2-2/3"x1/2"
3 = 3"x1"
5 = 5"x1"

Spiral Ribs: **3/4** = 3/4"x3/4"@7-1/2"
1 = 3/4"x1"@11-1/2"

(*) The price bid for "Pipe Conduit" bid items includes end sections. Pipe Extensions shall pay for end sections seperately.
FES = Flared End Section
TES = Traversable End Section
(B) For pipe extension, "Begin Offset" refers to opening of existing end section,
End Offset refers to location of opening of proposed end section.

This document was originally issued and sealed by Jeffrey T. Lansink Registration Number PE- 5244, on 11/3/15 and the original document is stored at the North Dakota Department of Transportation

Allowable Pipe List

ND 23 - ND 28 to County Rd 13

STATE	PROJECT NO.	SECTION NO.	SHEET NO.
ND	SOIB-SOI-4-023(019)087	51	4

Plan & Profile Sheet Number	Begin Station / Location	Begin Offset (B)	End Station / Location	End Offset (B)	Pipe Installation (Pay Item)			Allowable Material	Required Diameter	Steel Pipe Coatings	Steel Pipe Corrugations or Sprial Ribs	Steel Pipe Minimum Thickness	R1 Fabric (Pay Item)	(*) End Sections Begin	End	Applicable Backfill Detail
					In	Bid Item	LF		In	Type		In	SY	EA	EA	
21	5004+16	78' Rt	5004+16	84' Lt	30	Pipe Conduit	154	Reinforced Concrete Pipe - Class II (**barrel length = 150 LF**)	30				832	Y - Flared (A)	Y - Flared (A)	D-714-25
								Corrugated Steel Pipe	30	A, P	2	0.064				
								Spiral Rib Steel Pipe	30	A, P	3/4, 1	0.064				
21	5016+29	30' Rt	5016+29	62' Rt	48 X 72	Cattle Pass Conc Intermed Section	32	Cattle Pass Conc Intermediate Section (**barrel length = 32 LF**)	48 x 72				190	Y - Remove & Replace	N	20-4
21	5016+29	28' Lt	5016+29	62' Lt	48 X 72	Cattle Pass Conc Intermed Section	34	Cattle Pass Conc Intermediate Section (**barrel length = 34 LF**)	48 x 72				202	Y - Remove & Replace	N	20-4
22	5020+28	95' Lt	5020+28	93' Rt	30	Pipe Conduit	180	Reinforced Concrete Pipe - Class III (**barrel length = 176 LF**)	30				1340	Y - Flared (A)	Y - Flared (A)	D-714-25
								Corrugated Steel Pipe	30	A, P	2	0.064				
								Spiral Rib Steel Pipe	30	A, P	3/4, 1	0.064				
23	5044+28	64' Rt	5044+28	76' Rt	30	Pipe Conc. Reinf. CL III (Extension)	12	Reinforced Concrete Pipe - Class III (**barrel length = 12 LF**)	30				47	Y - Flared	N	20-1
23	5046+18	68' Lt	5046+75	68' Lt	24	Pipe Conduit - Approach	56	Reinforced Concrete Pipe - Class III (**barrel length = 52 LF**)	24					Y - Flared (A)	Y - Flared (A)	D-203-08
								Corrugated Steel Pipe	24	Z, A, P	2	0.064				
								Spiral Rib Steel Pipe	24	Z, A, P	3/4, 1	0.064				
								High-Density Polyethylene (HDPE)	24			Man Recom				
23	5046+31	115' Rt	5046+92	80' Rt	24	Pipe Conduit - Approach	72	Reinforced Concrete Pipe - Class III (**barrel length = 68 LF**)	24					Y - Flared (A)	Y - Flared (A)	D-203-08
								Corrugated Steel Pipe	24	Z, A, P	2	0.064				
								Spiral Rib Steel Pipe	24	Z, A, P	3/4, 1	0.064				
								High-Density Polyethylene (HDPE)	24			Man Recom				
24	5061+19	65' Lt	5061+78	65' Lt	24	Pipe Conduit - Approach	58	Reinforced Concrete Pipe - Class III (**barrel length = 54 LF**)	24					Y - Flared (A)	Y - Flared (A)	D-203-08
								Corrugated Steel Pipe	24	Z, A, P	2	0.064				
								Spiral Rib Steel Pipe	24	Z, A, P	3/4, 1	0.064				
								High-Density Polyethylene (HDPE)	24			Man Recom				

Coatings: **Z** = Zinc
A = Aluminum
P = Polymeric (over Zinc or Aluminum)

Corrugations: **2** = 2-2/3"x1/2"
3 = 3"x1"
5 = 5"x1"

Spiral Ribs: **3/4** = 3/4"x3/4"@7-1/2"
1 = 3/4"x1"@11-1/2"

(*) The price bid for "Pipe Conduit" bid items includes end sections. Pipe Extensions shall pay for end sections seperately.
FES = Flared End Section
TES = Traversable End Section
(B) For pipe extension, "Begin Offset" refers to opening of existing end section,
End Offset refers to location of opening of proposed end section.

This document was originally issued and sealed by Jeffrey T. Lansink Registration Number PE- 5244, on 11/3/15 and the original document is stored at the North Dakota Department of Transportation

Allowable Pipe List

ND 23 - ND 28 to County Rd 13

STATE	PROJECT NO.	SECTION NO.	SHEET NO.
ND	SOIB-SOI-4-023(019)087	60	1

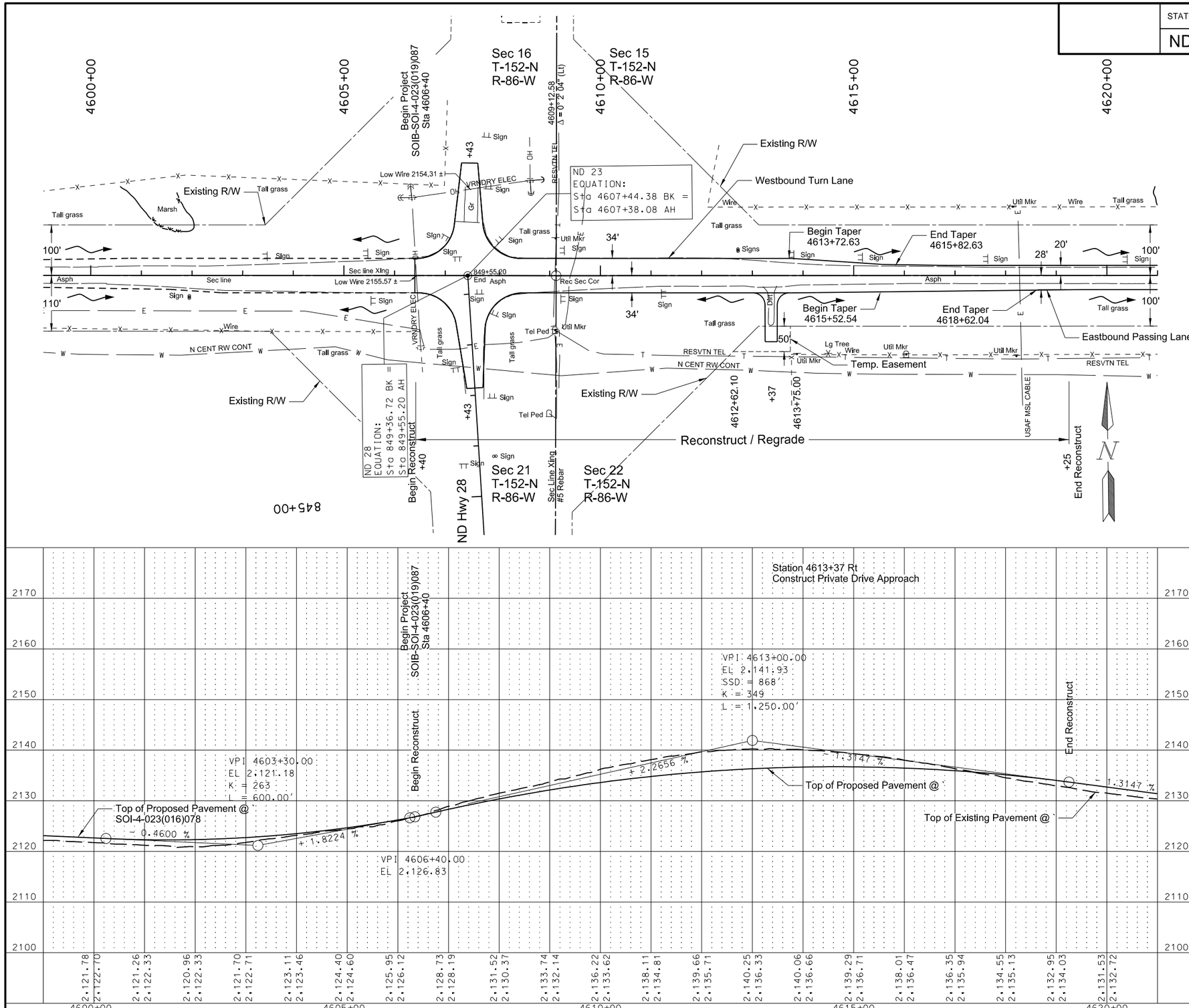

This document was originally issued and sealed by Jeffrey T. Lansink Registration Number PE- 5244, on 11/3/15 and the original document is stored at the North Dakota Department of Transportation

Plan and Profile

ND 23 - ND 28 to County Rd 13

STATE	PROJECT NO.	SECTION NO.	SHEET NO.
ND	SOIB-SOI-4-023(019)087	60	2

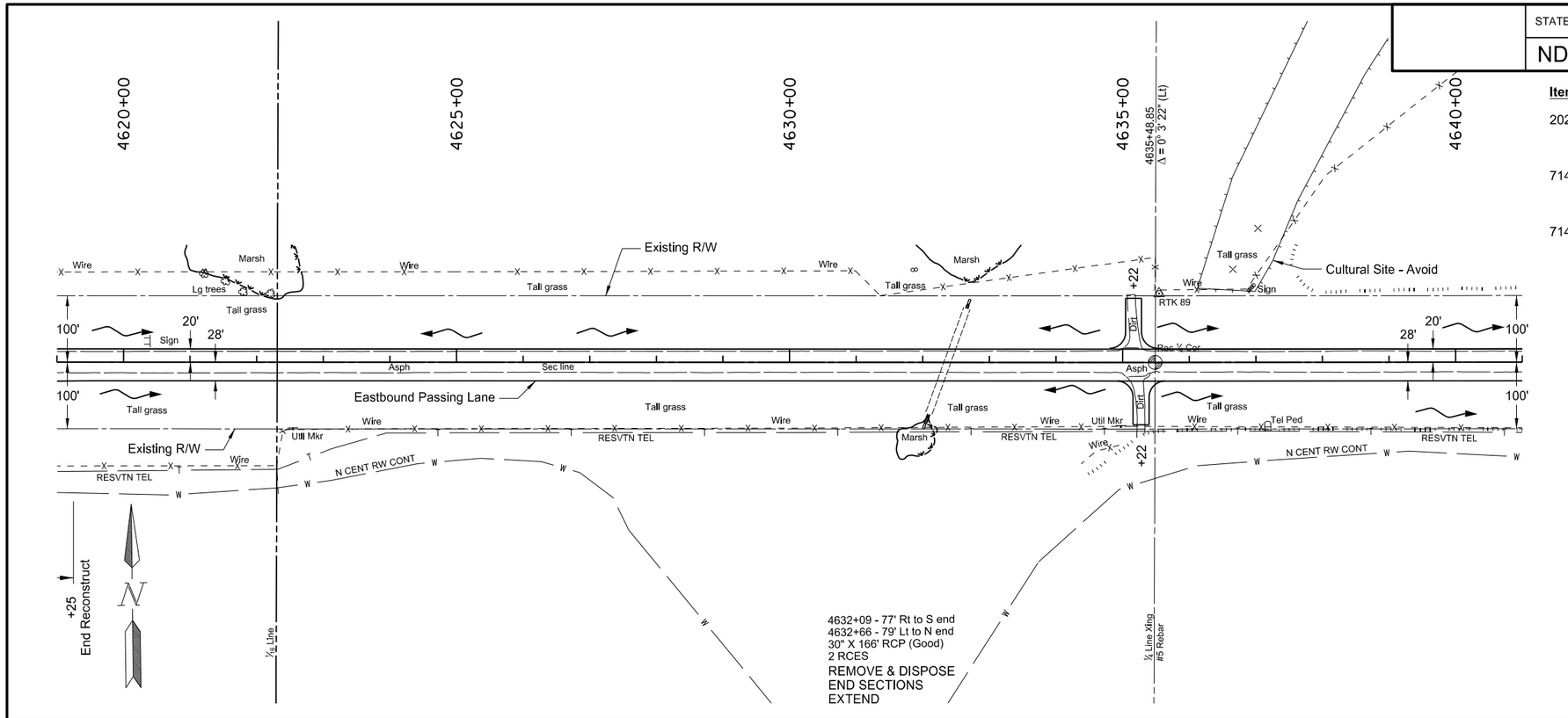

Item	Description	Quantity	Unit
202-0169	REMOVAL OF END SECTION-ALL TYPES & SIZES		
	Sta. 4632+66 Lt	1	EA
	Sta. 4632+09 Rt	1	EA
714-0820	PIPE CONC REINF 30IN CL III		
	Sta. 4632+66 Lt 88' to 4632+68 Lt 92'	6	LF
	Sta. 4632+09 Rt 83' to 4632+04 Rt 97'	14	LF
714-3030	END SECT - CONC REINF 30IN		
	Sta. 4632+66 Lt to 4632+09 Rt	2	EA

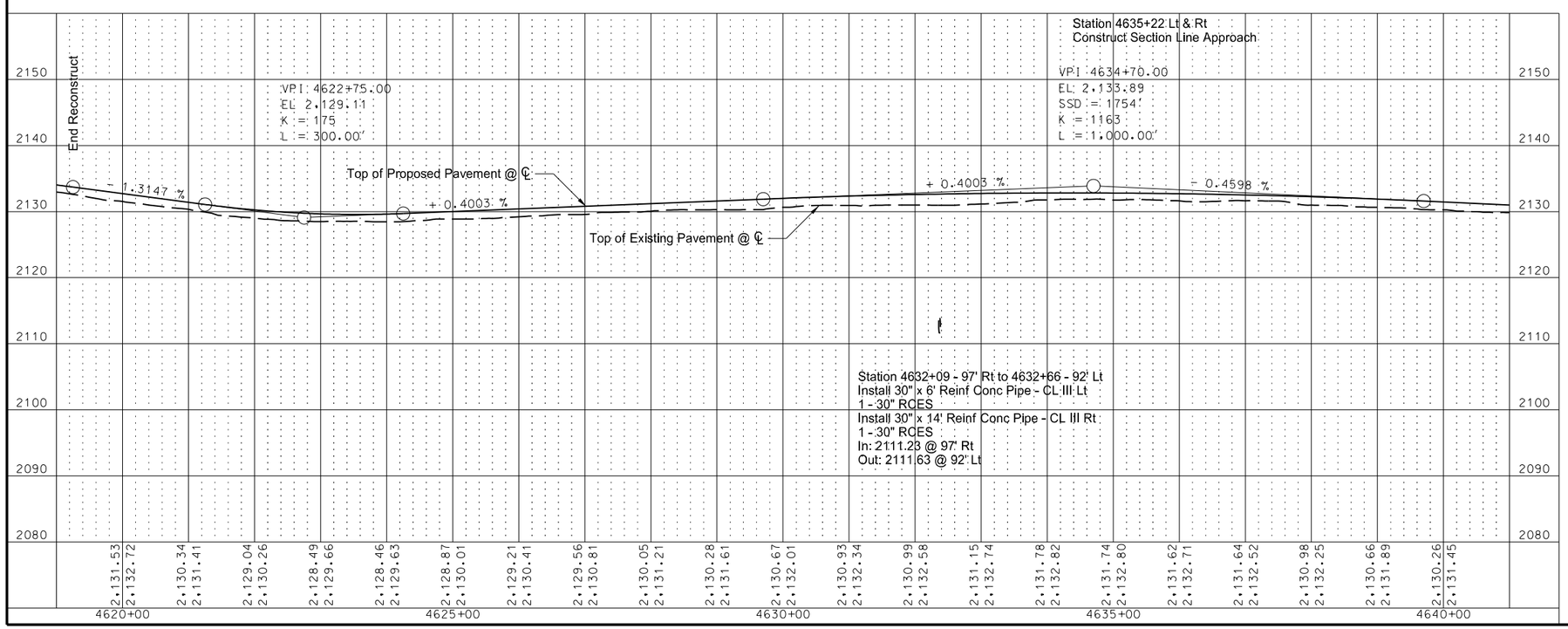

This document was originally issued and sealed by Jeffrey T. Lansink Registration Number PE- 5244, on 11/3/15 and the original document is stored at the North Dakota Department of Transportation

Plan and Profile

ND 23 - ND 28 to County Rd 13

STATE	PROJECT NO.	SECTION NO.	SHEET NO.
ND	SOIB-SOI-4-023(019)087	60	3

Item	Description	Quantity	Unit
202-0174	REMOVAL OF PIPE ALL TYPES AND SIZES		
	Sta. 4645+78 CL	52	LF
714-4105	PIPE CONDUIT 24IN		
	Sta. 4645+78 Lt 38' to Rt 46'	82	LF
	END SECT-TRAVERSABLE		
	Sta. 4645+78 Lt & Rt	2	EA

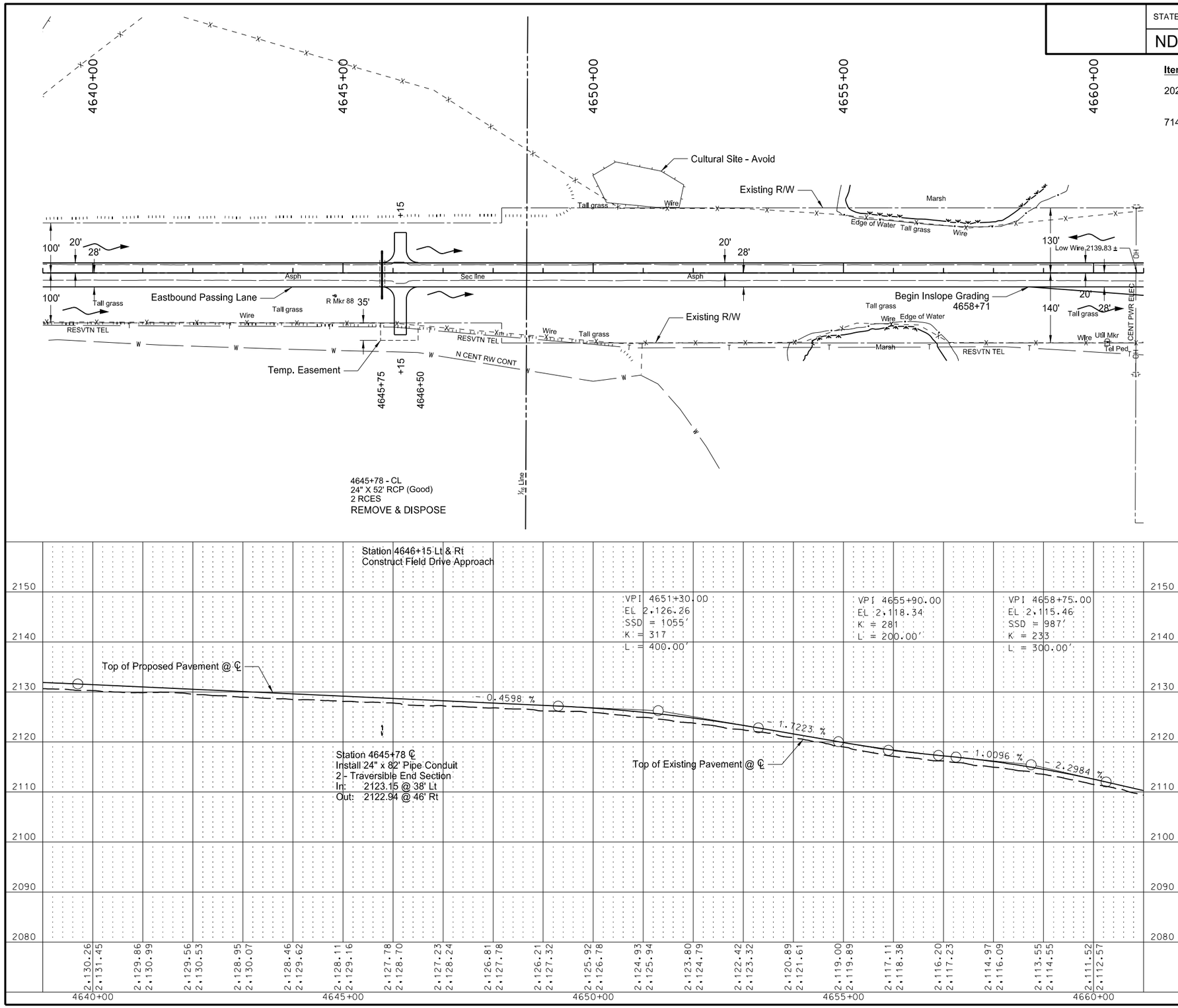

This document was originally issued and sealed by Jeffrey T. Lansink Registration Number PE- 5244, on 11/3/15 and the original document is stored at the North Dakota Department of Transportation

Plan and Profile

ND 23 - ND 28 to County Rd 13

STATE	PROJECT NO.	SECTION NO.	SHEET NO.
ND	SOIB-SOI-4-023(019)087	60	4

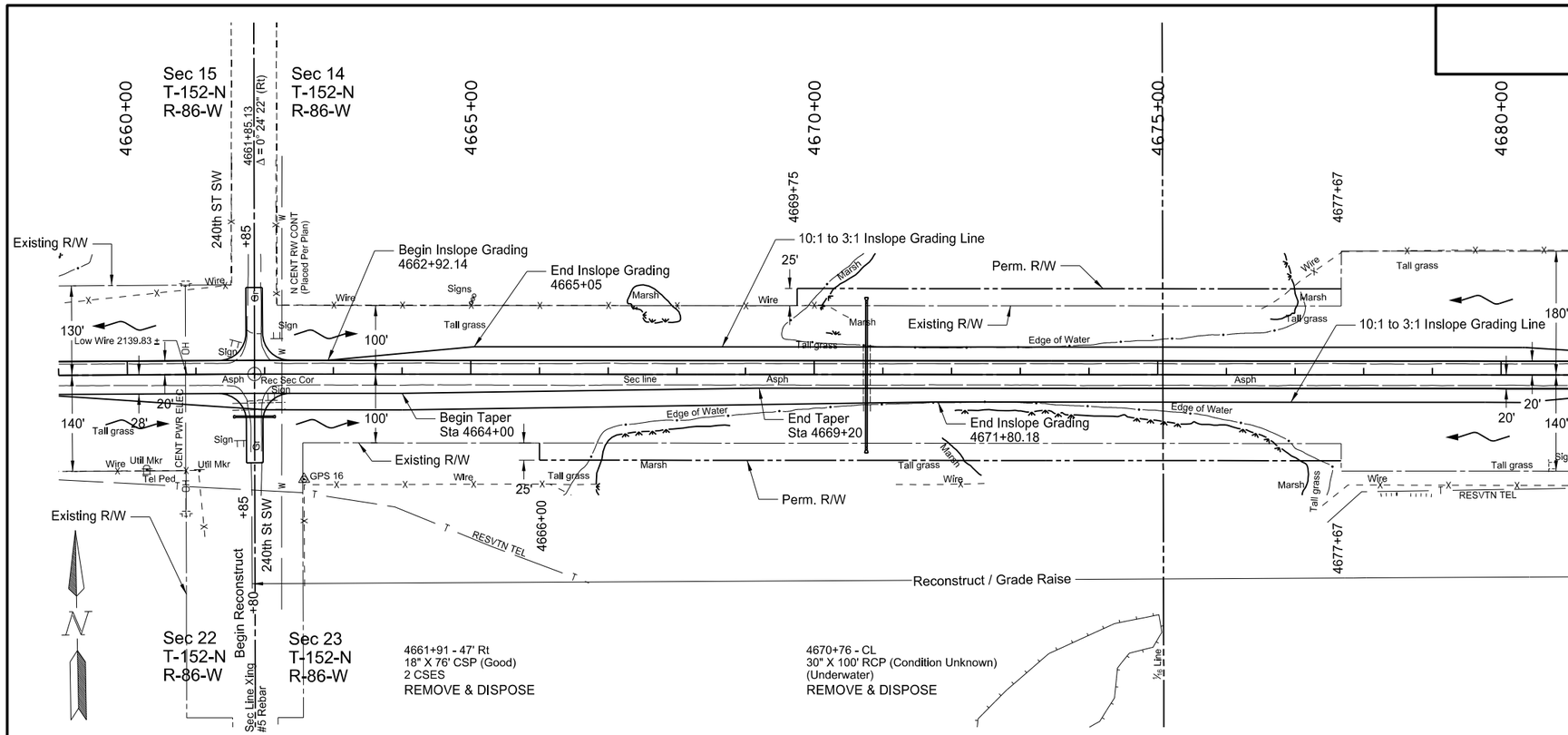

Item	Description	Quantity	Unit
202-0174	REMOVAL OF PIPE ALL TYPES AND SIZES		
	Sta. 4661+91 Rt	76	LF
	Sta. 4670+76 CL	100	LF
714-4106	PIPE CONDUIT 24IN - APPROACH		
	Sta. 4661+85 Rt 62'	54	LF
714-4110	PIPE CONDUIT 30IN		
	Sta. 4670+76 Lt 108' to Rt 110'	210	LF

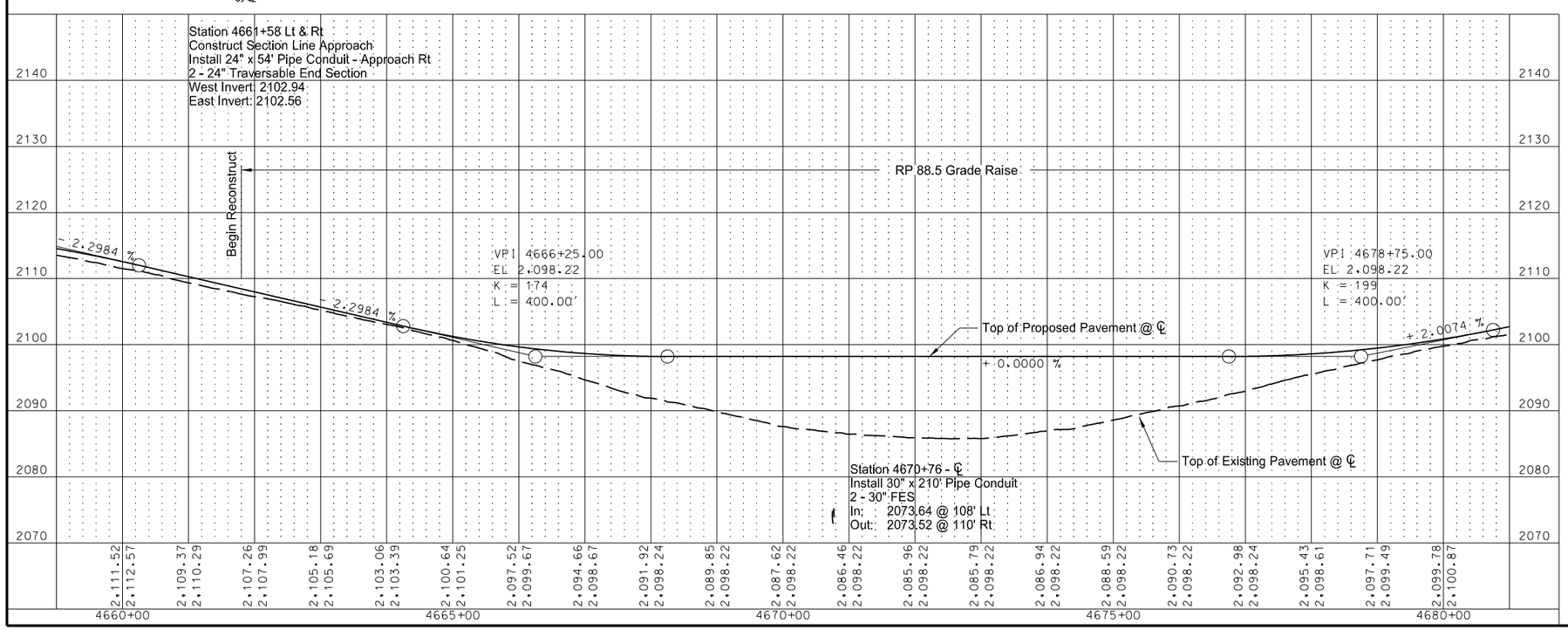

This document was originally issued and sealed by Jeffrey T. Lansink Registration Number PE- 5244, on 11/3/15 and the original document is stored at the North Dakota Department of Transportation

Plan and Profile

ND 23 - ND 28 to County Rd 13

STATE	PROJECT NO.	SECTION NO.	SHEET NO.
ND	SOIB-SOI-4-023(019)087	60	5

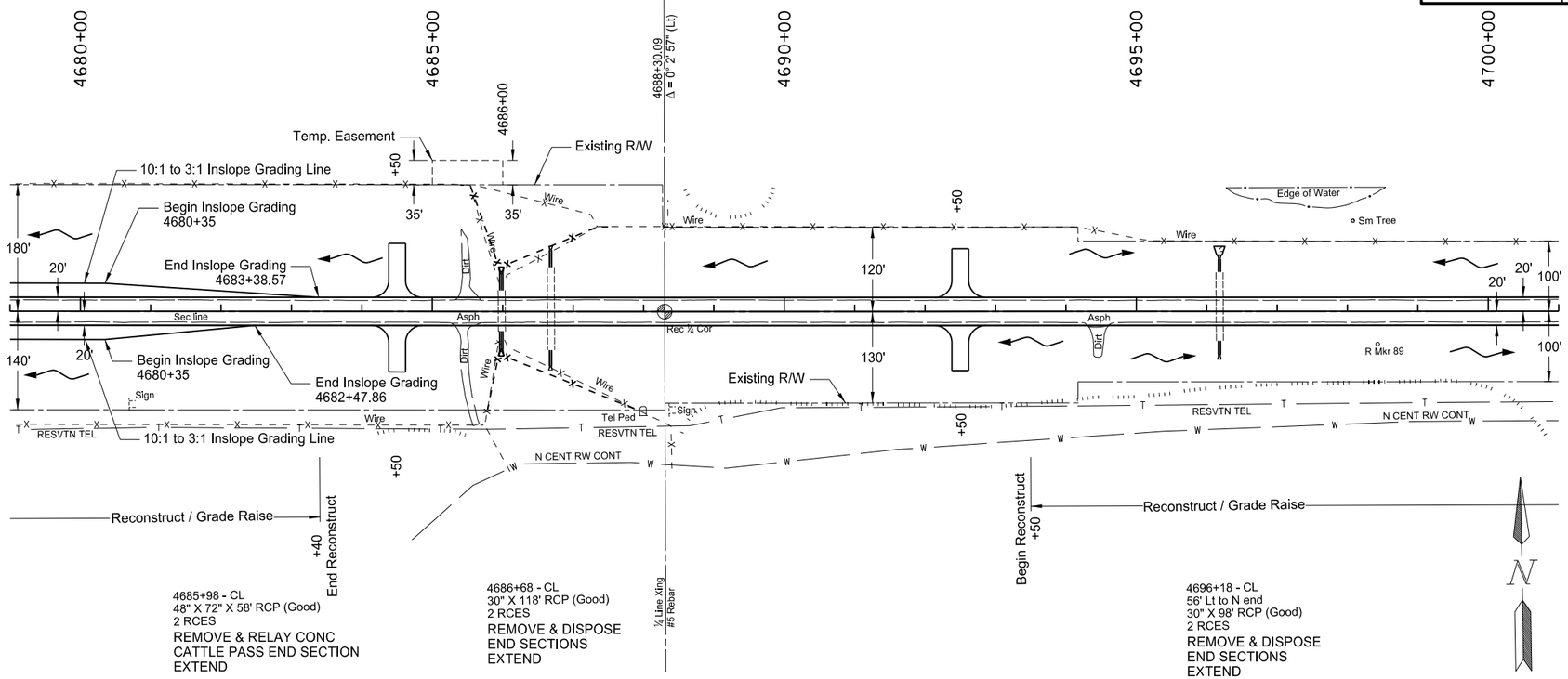

Item	Description	Quantity	Unit
202-0169	REMOVAL OF END SECTION - ALL TYPES AND SIZES		
	Sta. 4686+68 Lt & Rt	2	EA
	Sta. 4696+18 Lt & Rt	2	EA
256-0201	RIPRAP GRADE II		
	Sta. 4696+18 Lt	18.7	TON
709-0155	GEOSYNTHETIC MATERIAL TYPE RR		
	Sta. 4696+18 Lt	30	SY
714-0820	PIPE CONC REINF 30IN CL III		
	Sta. 4686+68 Lt 63' to Lt 87'	24	LF
	Sta. 4686+68 Rt 55' to Rt 77'	22	LF
	Sta. 4696+18 Lt 56' to Lt 74'	18	LF
	Sta. 4696+18 Rt 42' to Rt 62'	20	LF
714-3030	END SECT-CONC REINF 30IN		
	Sta. 4686+68 Lt & Rt	2	EA
	Sta. 4696+18 Lt & Rt	2	EA
714-9200	CATTLE PASS CONC INTERMED SECTION		
	Sta. 4685+98 Lt 30' to Lt 54'	24	LF
	Sta. 4685+98 Rt 28' to Rt 54'	26	LF
714-9611	REMOVE & RELAY CONC CATTLE PASS END SECTION		
	Sta. 4685+98 Lt & Rt	2	EA
752-0100	FENCE BARBED WIRE 3 STRAND		
	Sta. 4685+98 Lt & Rt	577	LF
752-3140	CORNER ASSEMBLY BARBED WIRE		
	Sta. 4685+98 Lt & Rt	2	EA

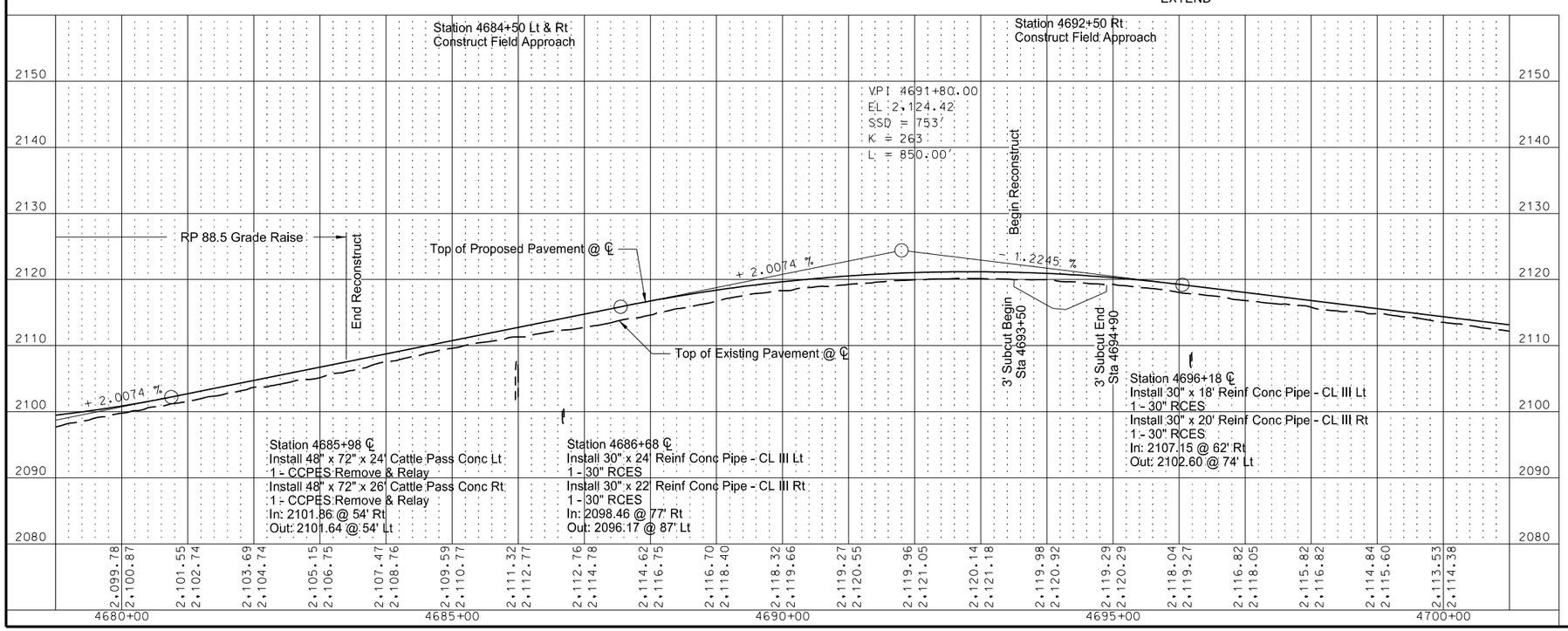

This document was originally issued and sealed by Jeffrey T. Lansink Registration Number PE- 5244, on 11/3/15 and the original document is stored at the North Dakota Department of Transportation

Plan and Profile

ND 23 - ND 28 to County Rd 13

STATE	PROJECT NO.	SECTION NO.	SHEET NO.
ND	SOIB-SOI-4-023(019)087	60	6

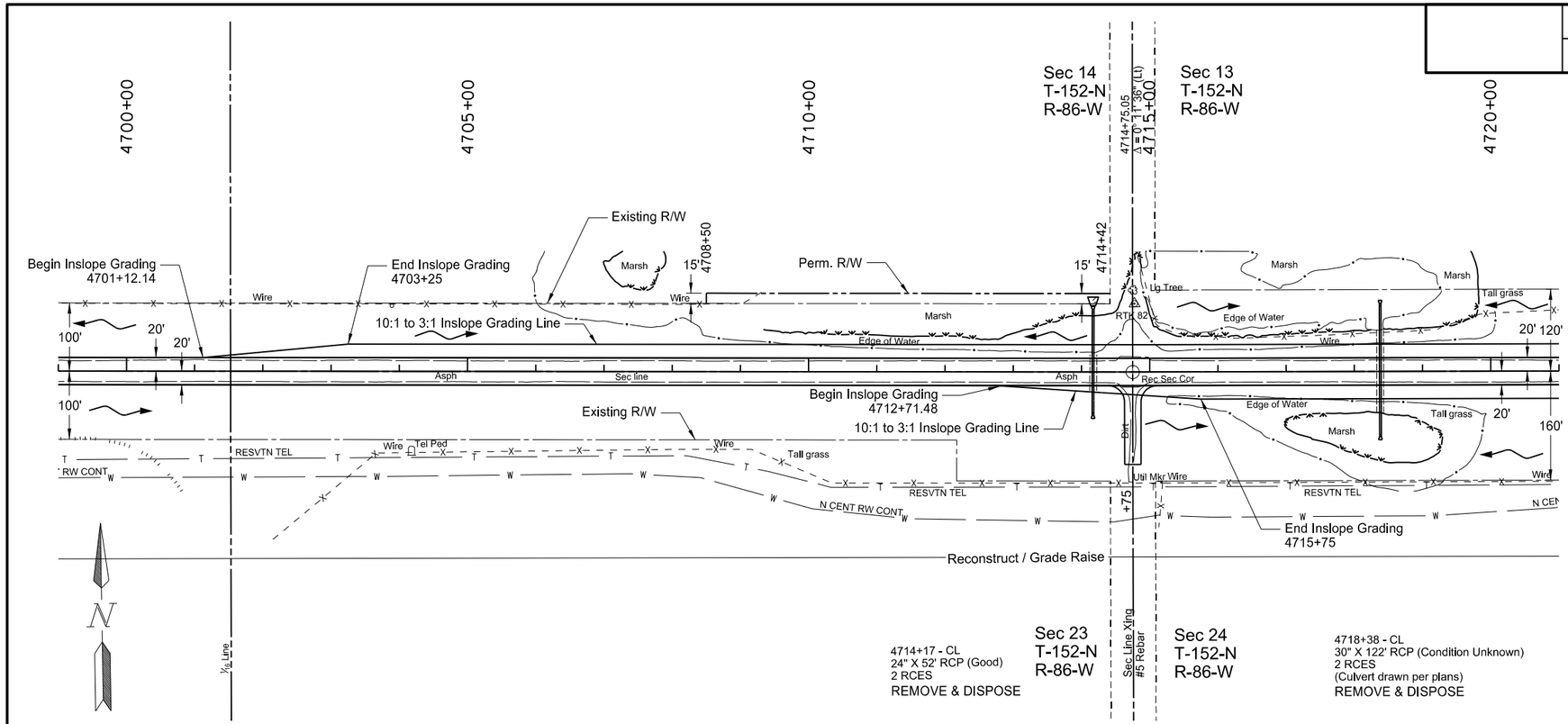

Item	Description	Quantity	Unit
202-0174	REMOVAL OF PIPE ALL TYPES AND SIZES		
	Sta. 4714+17 CL	52	LF
	Sta. 4718+38 CL	122	LF
256-0201	RIPRAP GRADE II		
	Sta. 4714+17 Lt	18.7	TON
709-0155	GEOSYNTHETIC MATERIAL TYPE RR		
	Sta. 4714+17 Lt	30	SY
714-4110	PIPE CONDUIT 30IN		
	Sta. 4714+17 Lt 92' to Rt 64'	148	LF
	Sta. 4718+38 Lt 100' to Rt 96'	188	LF

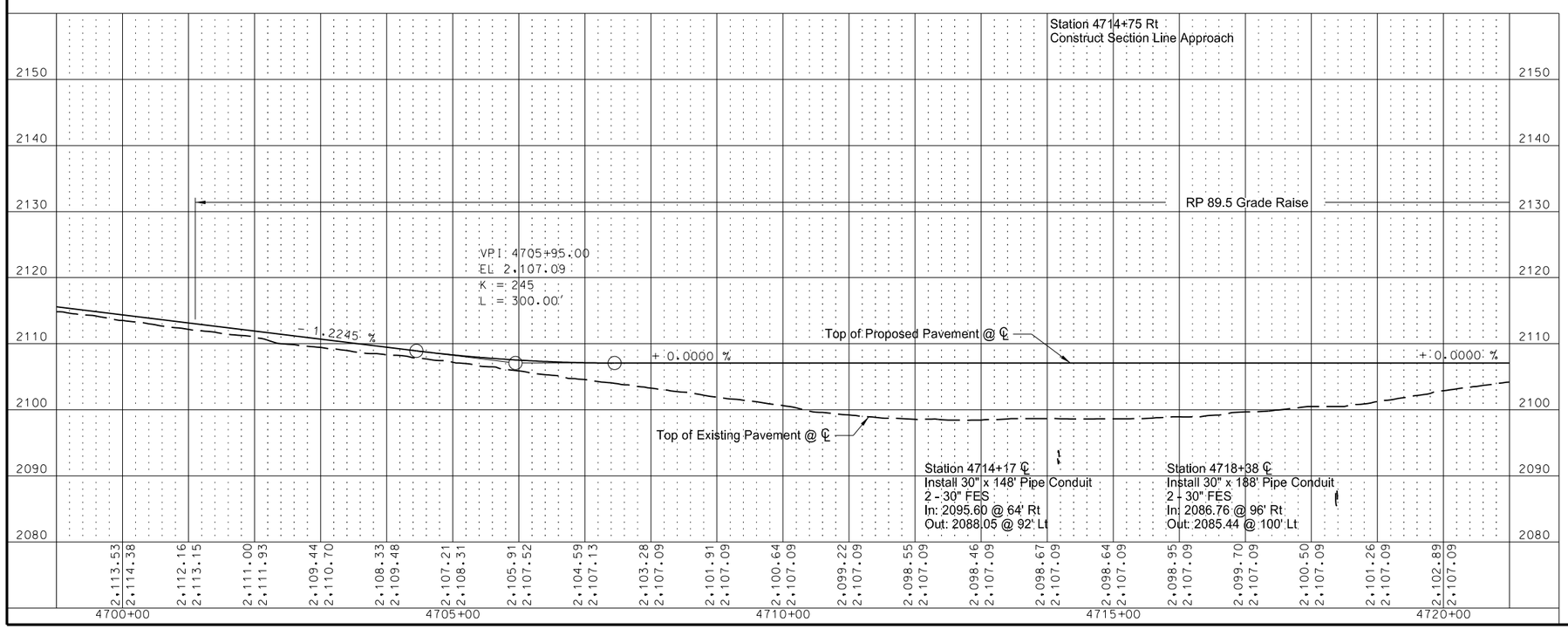

This document was originally issued and sealed by Jeffrey T. Lansink Registration Number PE- 5244, on 11/3/15 and the original document is stored at the North Dakota Department of Transportation

Plan and Profile

ND 23 - ND 28 to County Rd 13

STATE	PROJECT NO.	SECTION NO.	SHEET NO.
ND	SOIB-SOI-4-023(019)087	60	7

Item	Description	Quantity	Unit
202-0174	REMOVAL OF PIPE ALL TYPES AND SIZES Sta. 4737+77 ℄	94	LF
714-4110	PIPE CONDUIT 30IN Sta 4737+77 Lt 68' to Rt 68'	128	LF
752-0910	SAFETY FENCE Sta. 4725+00 Rt to 4727+00 Rt	120	LF

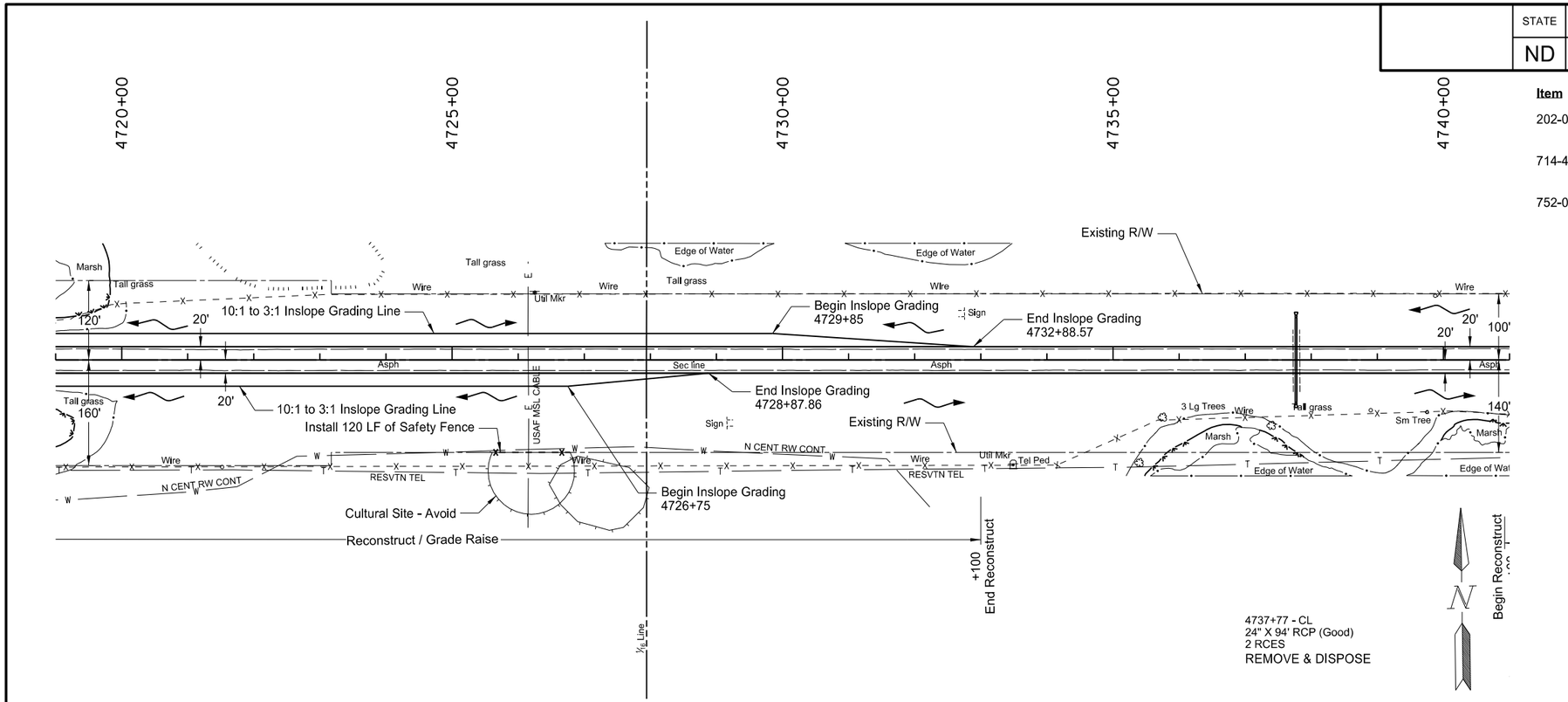

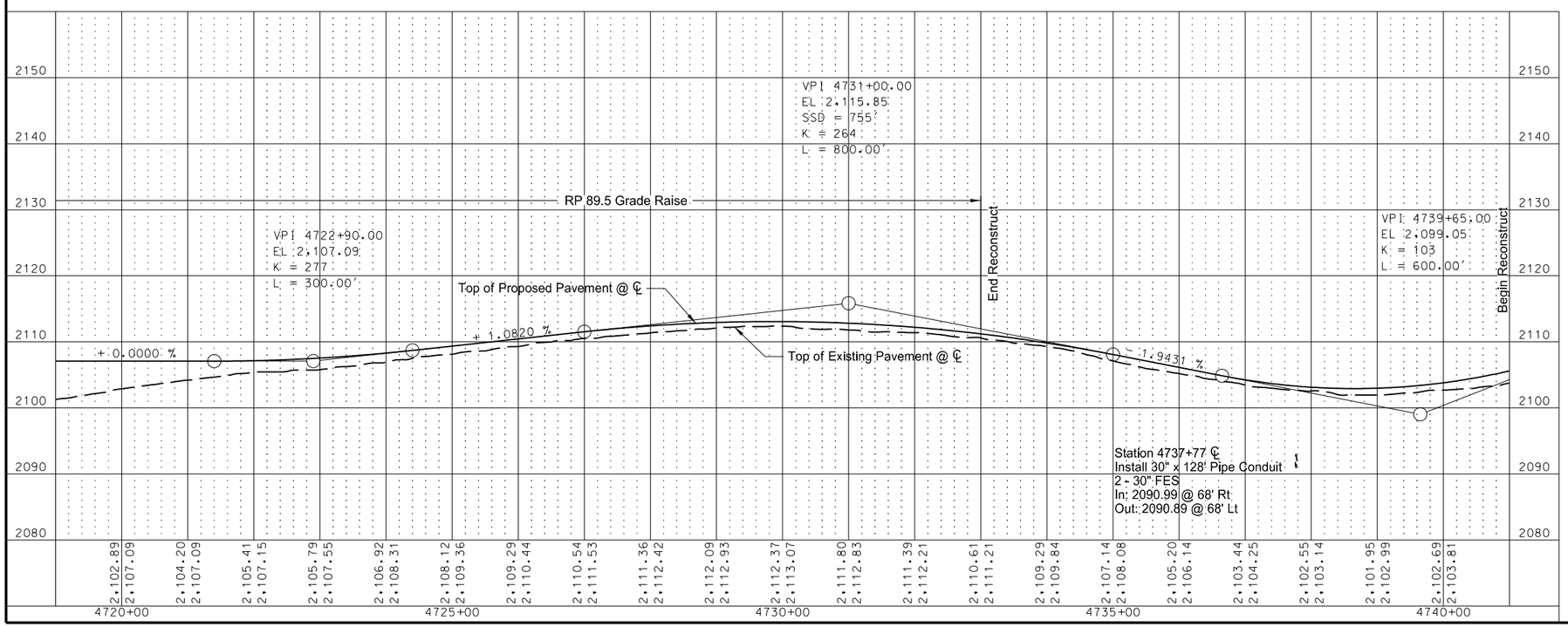

This document was originally issued and sealed by Jeffrey T. Lansink Registration Number PE- 5244, on 11/3/15 and the original document is stored at the North Dakota Department of Transportation

Plan and Profile

ND 23 - ND 28 to County Rd 13

STATE	PROJECT NO.	SECTION NO.	SHEET NO.
ND	SOIB-SOI-4-023(019)087	60	8

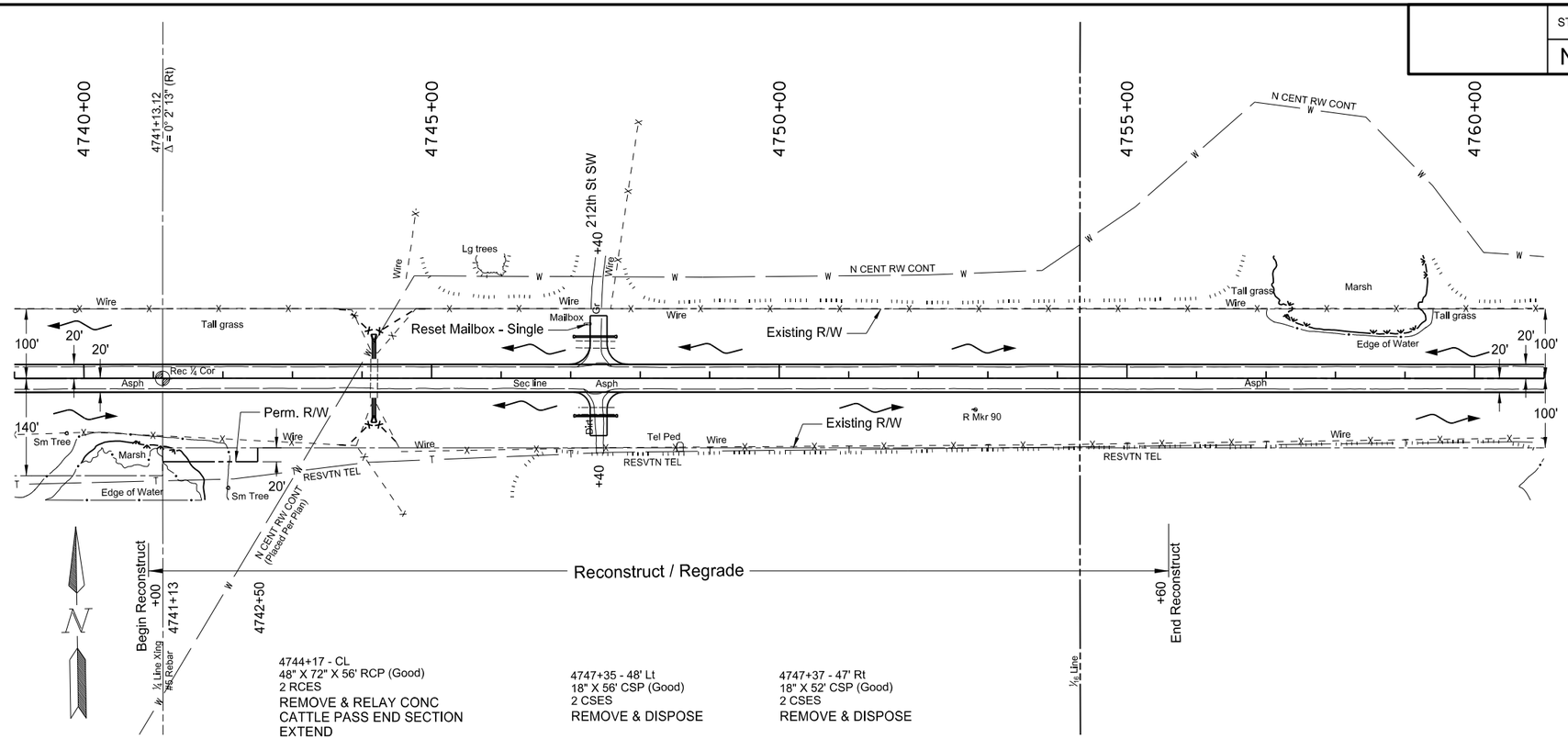

Item	Description	Quantity	Unit
202-0174	REMOVAL OF PIPE ALL TYPES AND SIZES		
	Sta. 4747+35 Lt	56	LF
	Sta. 4747+37 Rt	52	LF
714-4106	PIPE CONDUIT 24IN - APPROACH		
	Sta. 4747+40 Rt 54'	56	LF
	Sta. 4747+40 Lt 60'	56	LF
714-9200	CATTLE PASS CONC INTERMED SECTION		
	Sta. 4744+17 Lt 28' to Lt 54'	26	LF
	Sta. 4744+17 Rt 28' to Rt 54'	26	LF
714-9611	REMOVE & RELAY CONC CATTLE PASS END SECTION		
	Sta. 4744+17 Lt & Rt	2	EA
752-0100	FENCE BARBED WIRE 3 STRAND		
	Sta. 4744+17 Lt & Rt	245	LF
752-3140	CORNER ASSEMBLY BARBED WIRE		
	Sta. 4744+17 Lt & Rt	3	EA
766-0120	RESET MAILBOX		
	Sta. 4747+24 Lt 78'	1	EA

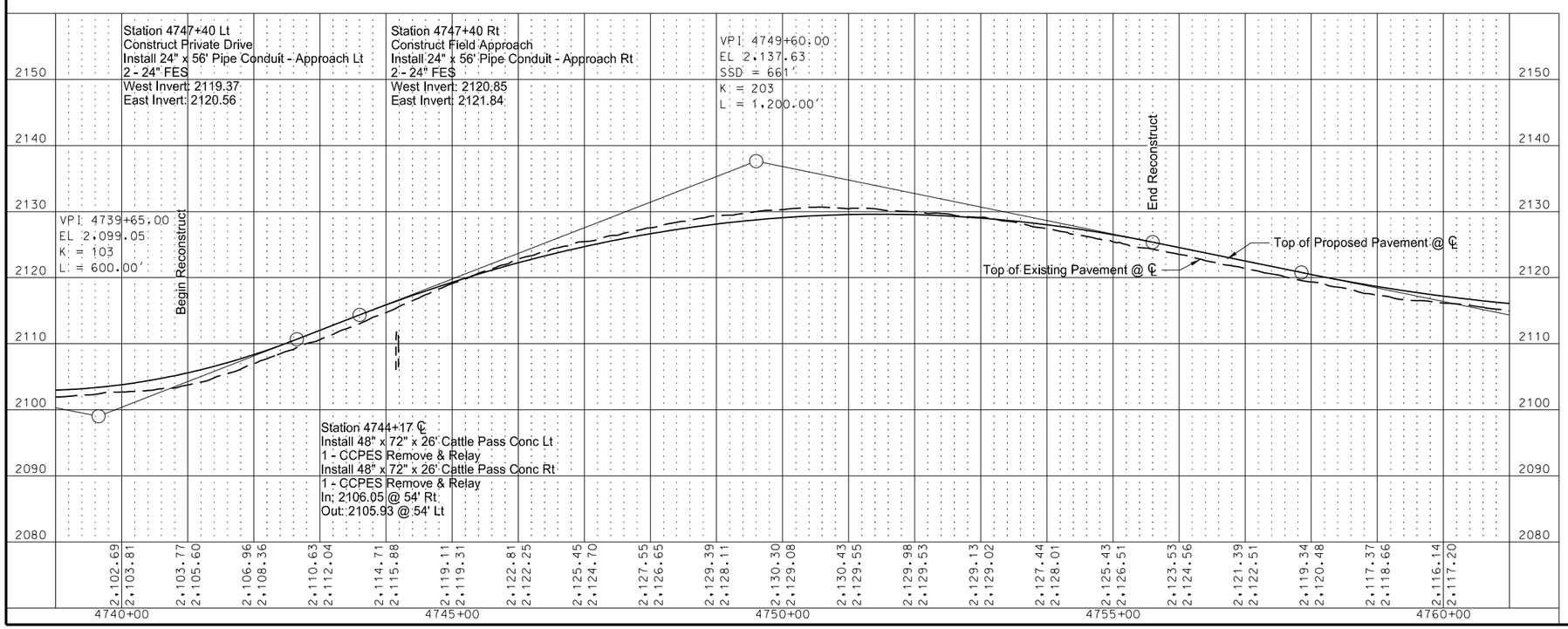

This document was originally issued and sealed by Jeffrey T. Lansink Registration Number PE- 5244, on 11/3/15 and the original document is stored at the North Dakota Department of Transportation

Plan and Profile

ND 23 - ND 28 to County Rd 13

STATE	PROJECT NO.	SECTION NO.	SHEET NO.
ND	SOIB-SOI-4-023(019)087	60	9

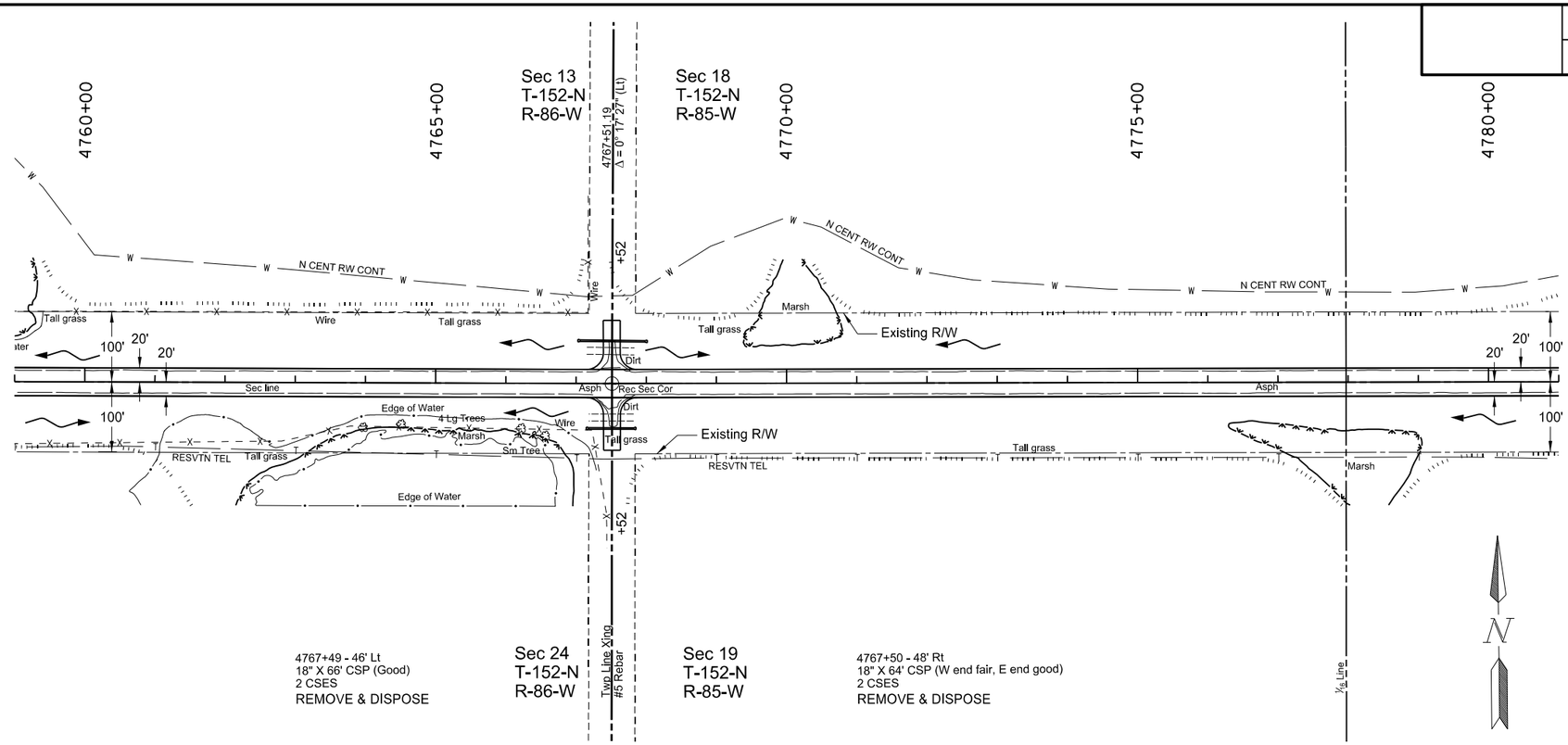

4767+49 - 46' Lt
18" X 66' CSP (Good)
2 CSES
REMOVE & DISPOSE

4767+50 - 48' Rt
18" X 64' CSP (W end fair, E end good)
2 CSES
REMOVE & DISPOSE

Item	Description	Quantity	Unit
202-0174	REMOVAL OF PIPE ALL TYPES AND SIZES		
	Sta. 4767+49 Lt	66	LF
	Sta. 4767+50 Rt	64	LF
714-4106	PIPE CONDUIT 24IN - APPROACH		
	Sta. 4767+52 Rt 64'	64	LF
	Sta. 4767+52 Lt 61'	92	LF

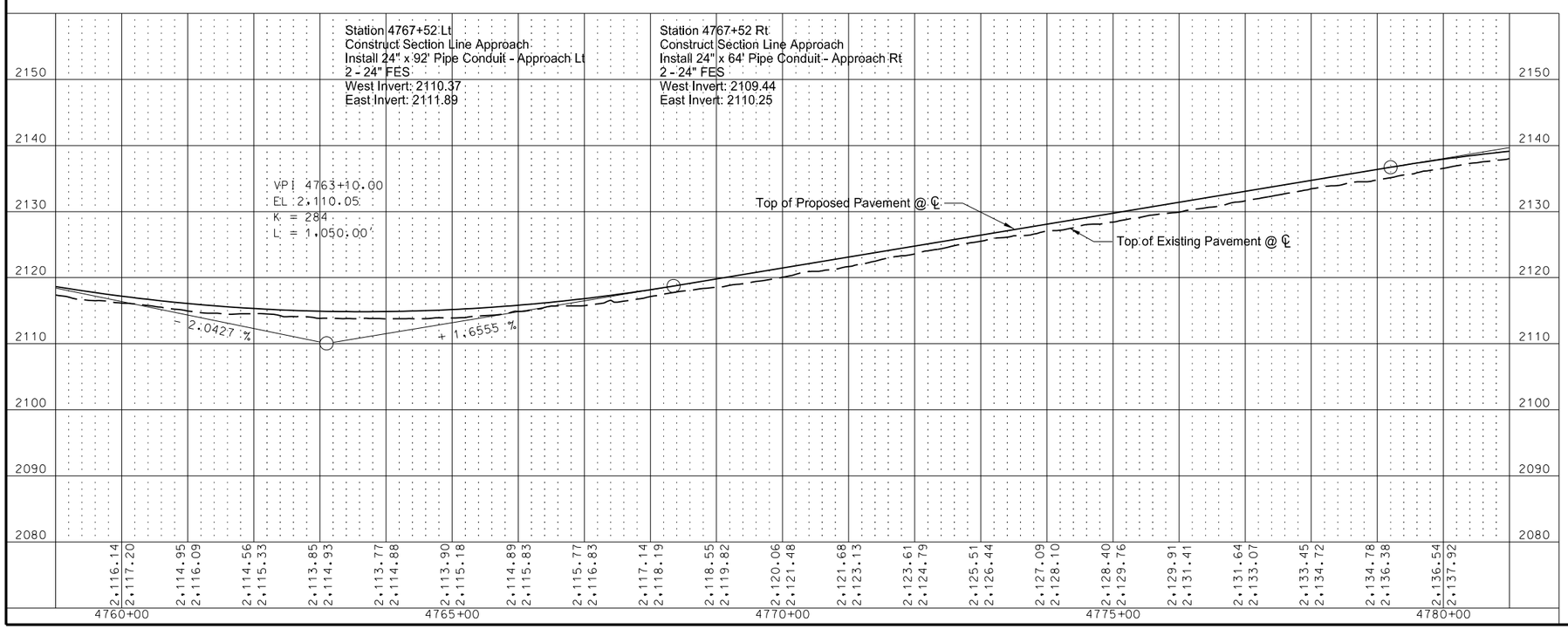

This document was originally issued and sealed by Jeffrey T. Lansink Registration Number PE- 5244, on 11/3/15 and the original document is stored at the North Dakota Department of Transportation

Plan and Profile

ND 23 - ND 28 to County Rd 13

STATE	PROJECT NO.	SECTION NO.	SHEET NO.
ND	SOIB-SOI-4-023(019)087	60	10

Item	Description	Quantity	Unit
202-0169	REMOVAL OF END SECTION - ALL TYPES & SIZES		
	Sta. 4787+68 Lt & Rt	2	EA
714-0820	PIPE CONC REINF 30IN CL III		
	Sta. 4787+68 Lt 67' to Lt 87'	20	LF
	Sta. 4787+68 Rt 69' to Rt 89'	20	LF
714-3030	END SECT - CONC REINF 30IN		
	Sta. 4787+68 Lt & Rt	2	EA

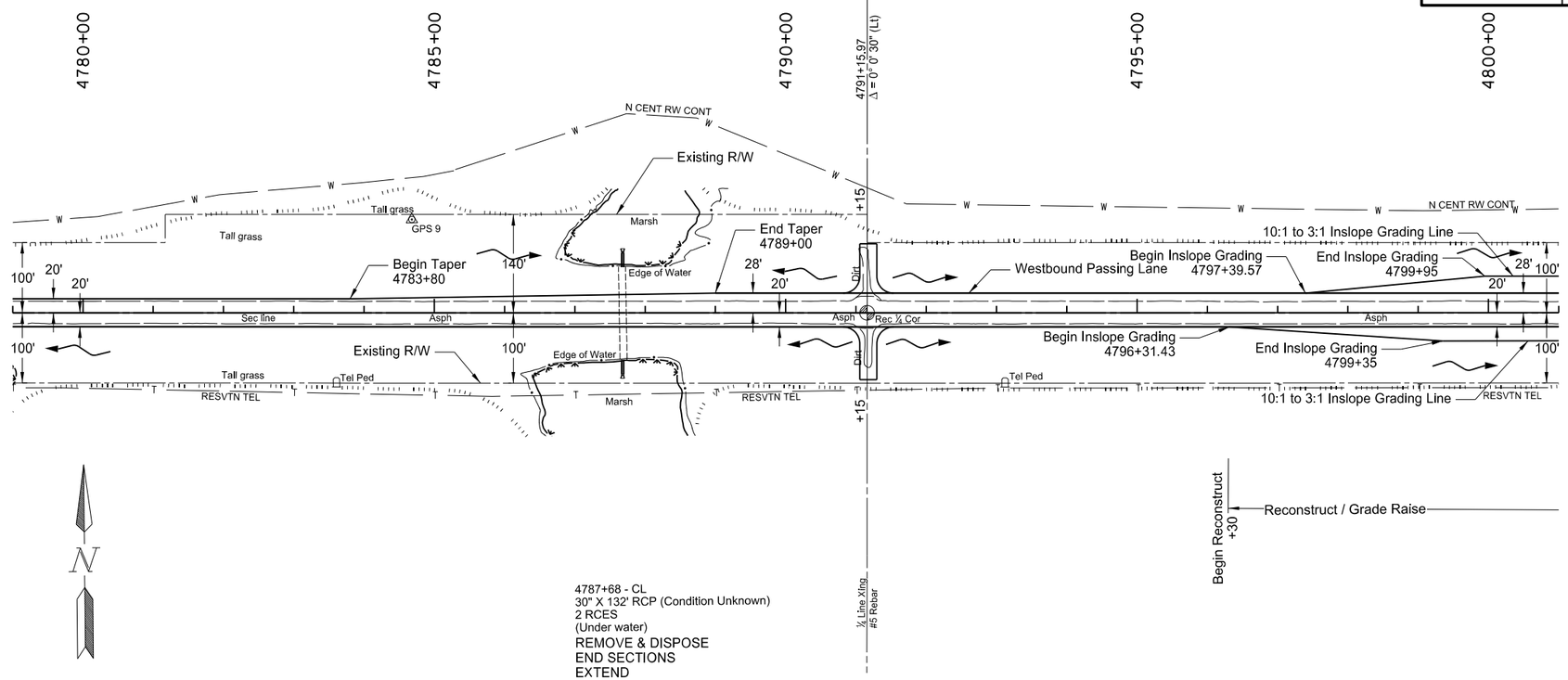

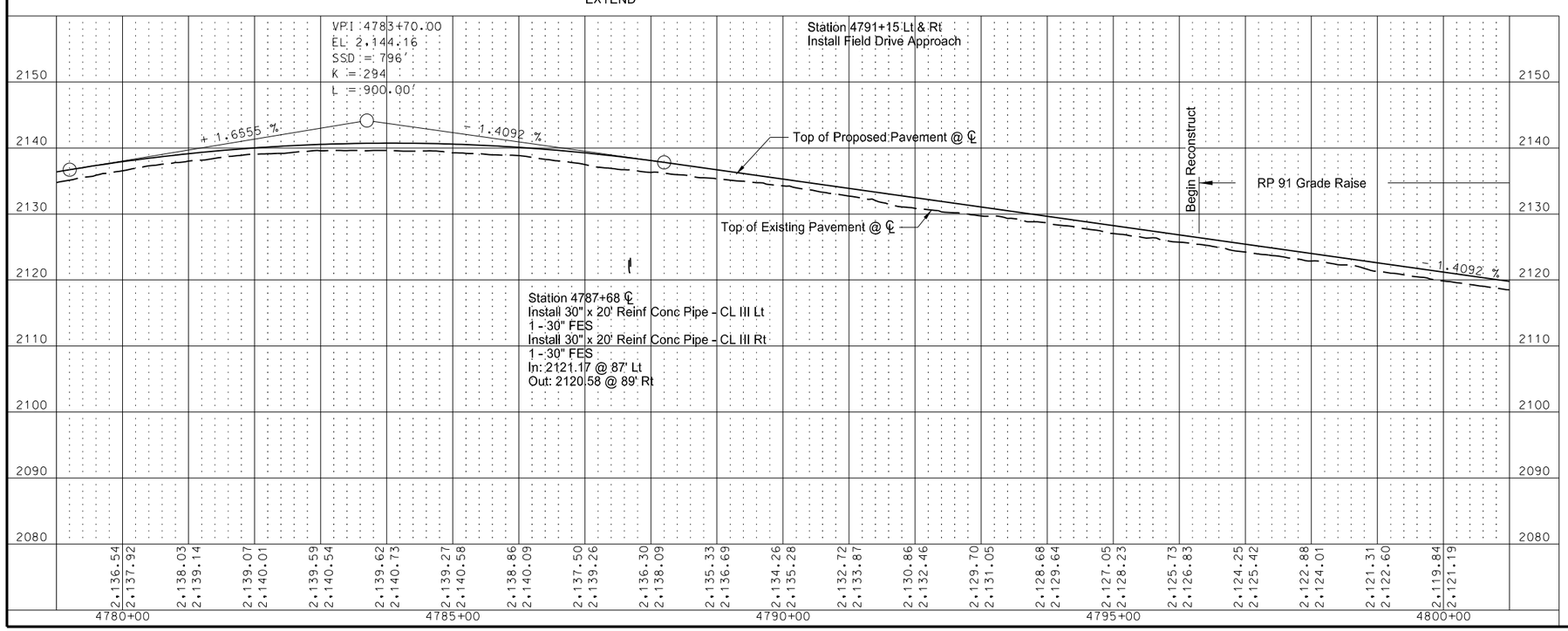

This document was originally issued and sealed by Jeffrey T. Lansink Registration Number PE- 5244 , on 11/3/15 and the original document is stored at the North Dakota Department of Transportation

Plan and Profile

ND 23 - ND 28 to County Rd 13

STATE	PROJECT NO.	SECTION NO.	SHEET NO.
ND	SOIB-SOI-4-023(019)087	60	11

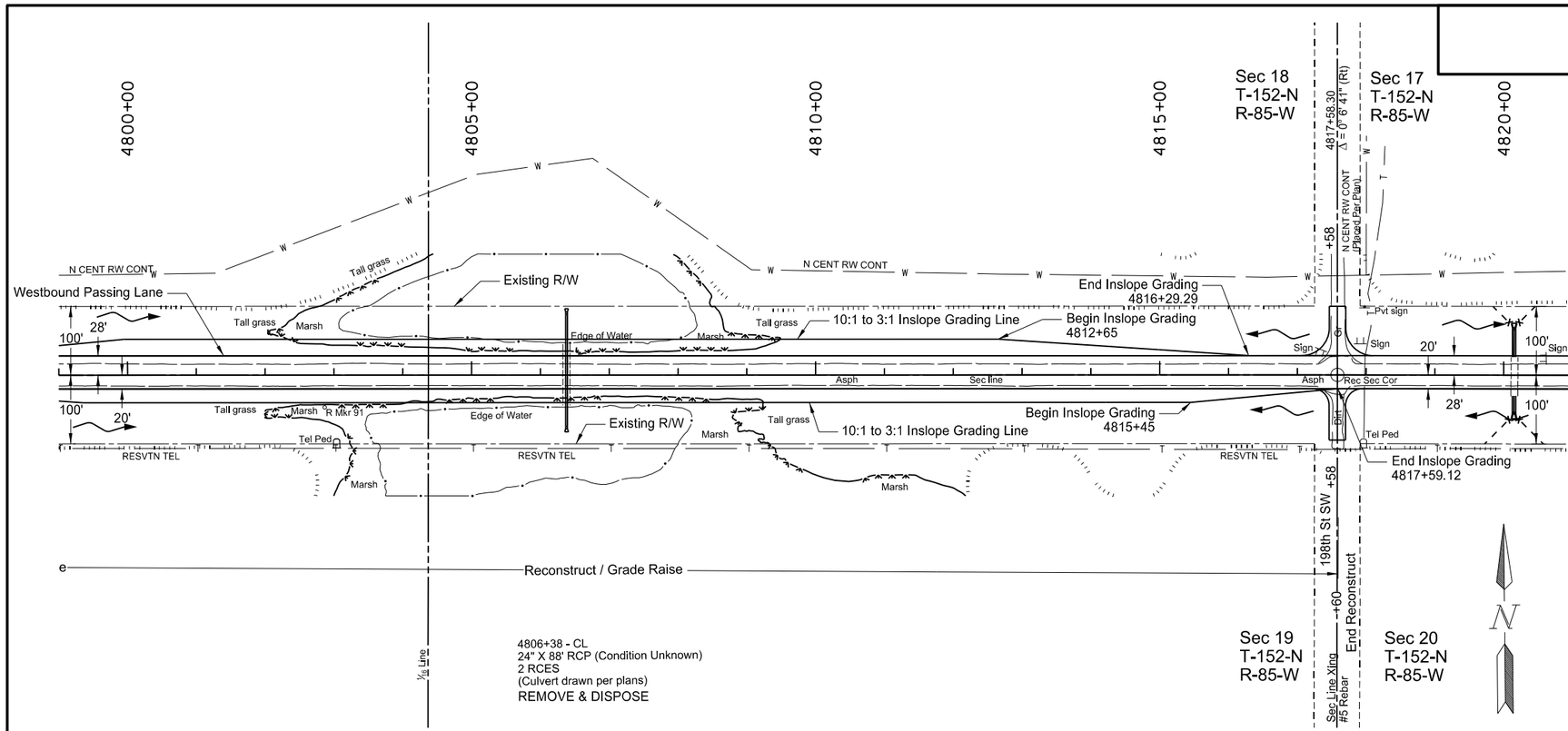

Item	Description	Quantity	Unit
202-0174	REMOVAL OF PIPE ALL TYPES AND SIZES		
	Sta. 4806+38 CL	88	LF
714-4110	PIPE CONDUIT 30IN		
	Sta. 4806+38 Lt 92' to Rt 78'	172	LF

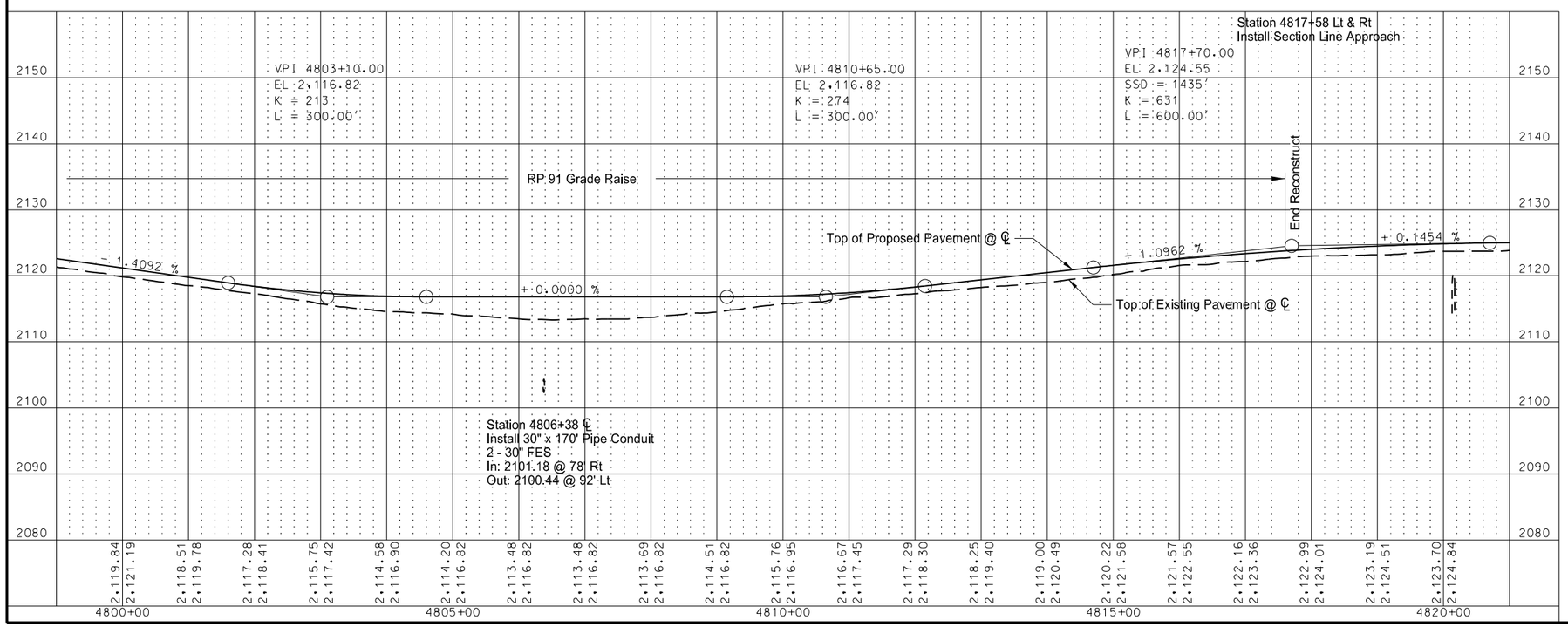

This document was originally issued and sealed by Jeffrey T. Lansink Registration Number PE- 5244, on 11/3/15 and the original document is stored at the North Dakota Department of Transportation

Plan and Profile

ND 23 - ND 28 to County Rd 13

STATE	PROJECT NO.	SECTION NO.	SHEET NO.
ND	SOIB-SOI-4-023(019)087	60	12

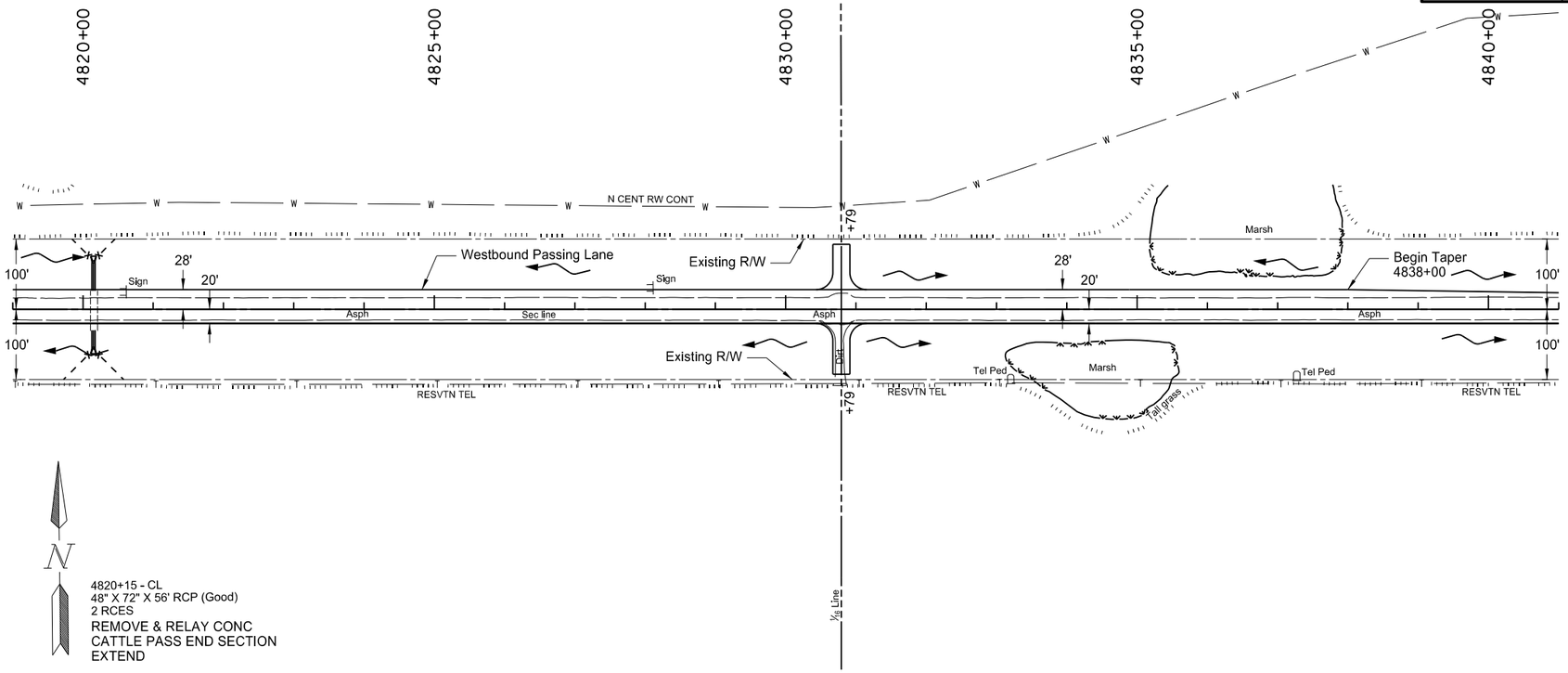

Item	Description	Quantity	Unit
714-9200	CATTLE PASS CONC INTERMED SECTION		
	Sta. 4820+15 Lt 26' to Lt 69'	40	LF
	Sta. 4820+15 Rt 30' to Rt 56'	24	LF
714-9611	REMOVE & RELAY CONC CATTLE PASS END SECTION		
	Sta. 4820+15 Lt & Rt	2	EA
752-0100	FENCE BARBED WIRE 3 STRAND		
	Sta. 4820+15 Lt & Rt	186	LF
752-3140	CORNER ASSEMBLY BARBED WIRE		
	Sta. 4820+15 Lt & Rt	4	EA

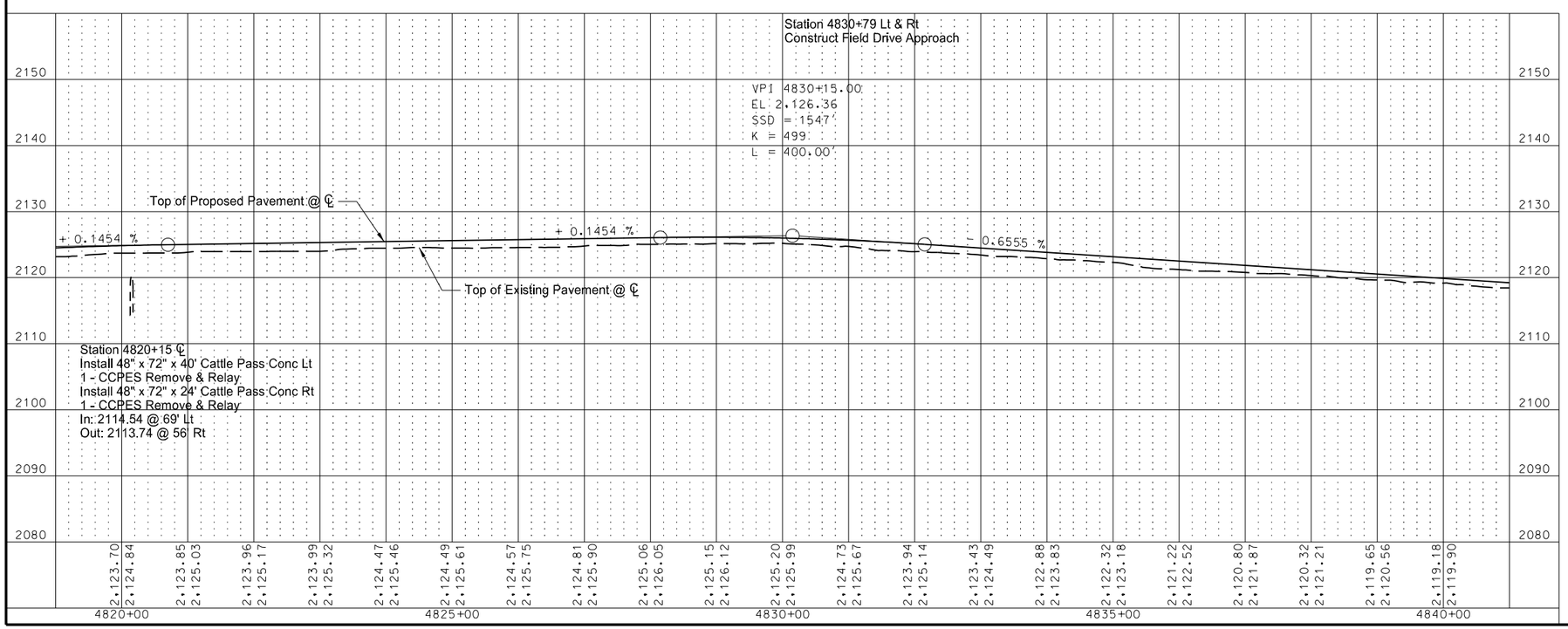

This document was originally issued and sealed by Jeffrey T. Lansink Registration Number PE- 5244, on 11/3/15 and the original document is stored at the North Dakota Department of Transportation

Plan and Profile

ND 23 - ND 28 to County Rd 13

STATE	PROJECT NO.	SECTION NO.	SHEET NO.
ND	SOIB-SOI-4-023(019)087	60	13

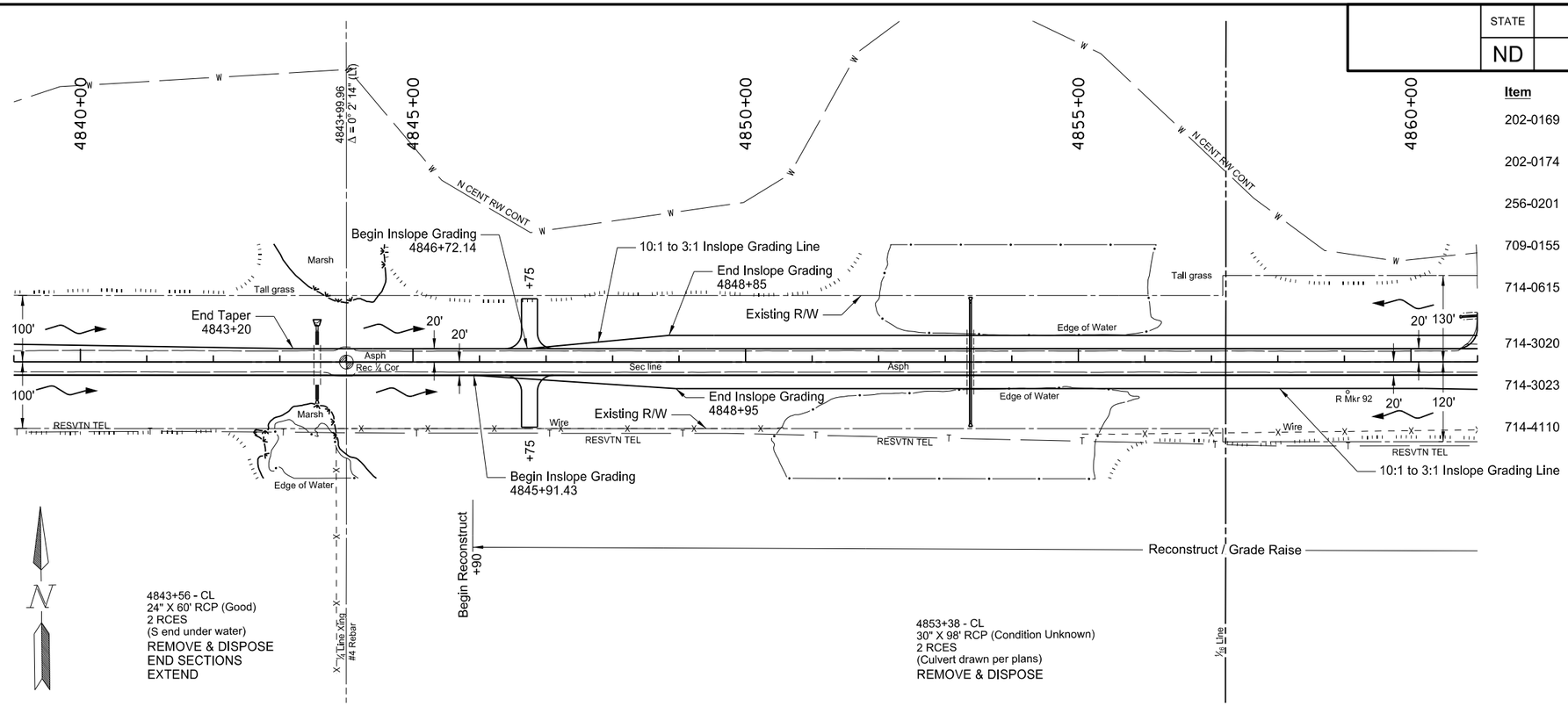

Item	Description	Quantity	Unit
202-0169	REMOVAL OF END SECTION - ALL TYPES & SIZES		
	Sta. 4843+56 Lt & Rt	2	EA
202-0174	REMOVAL OF PIPE ALL TYPES AND SIZES		
	Sta. 4853+38 CL	98	LF
256-0201	RIPRAP GRADE II		
	Sta. 4843+56 Lt	10.2	TON
709-0155	GEOSYNTHETIC MATERIAL TYPE RR		
	Sta. 4843+56 Lt	20	SY
714-0615	PIPE CONC REINF 24IN CL III		
	Sta. 4843+56 Lt 26' to Lt 47'	20	LF
	Sta. 4843+56 Rt 34' to Rt 58'	22	LF
714-3020	END SECT - CONC REINF 24IN		
	Sta. 4843+56 Rt	1	EA
714-3023	END SECT-TRAVERSABLE REINF. CONC.24IN		
	Sta. 4843+56 Lt	1	EA
714-4110	PIPE CONDUIT 30IN		
	Sta. 4853+38 Lt 93' to Rt 93'	178	LF

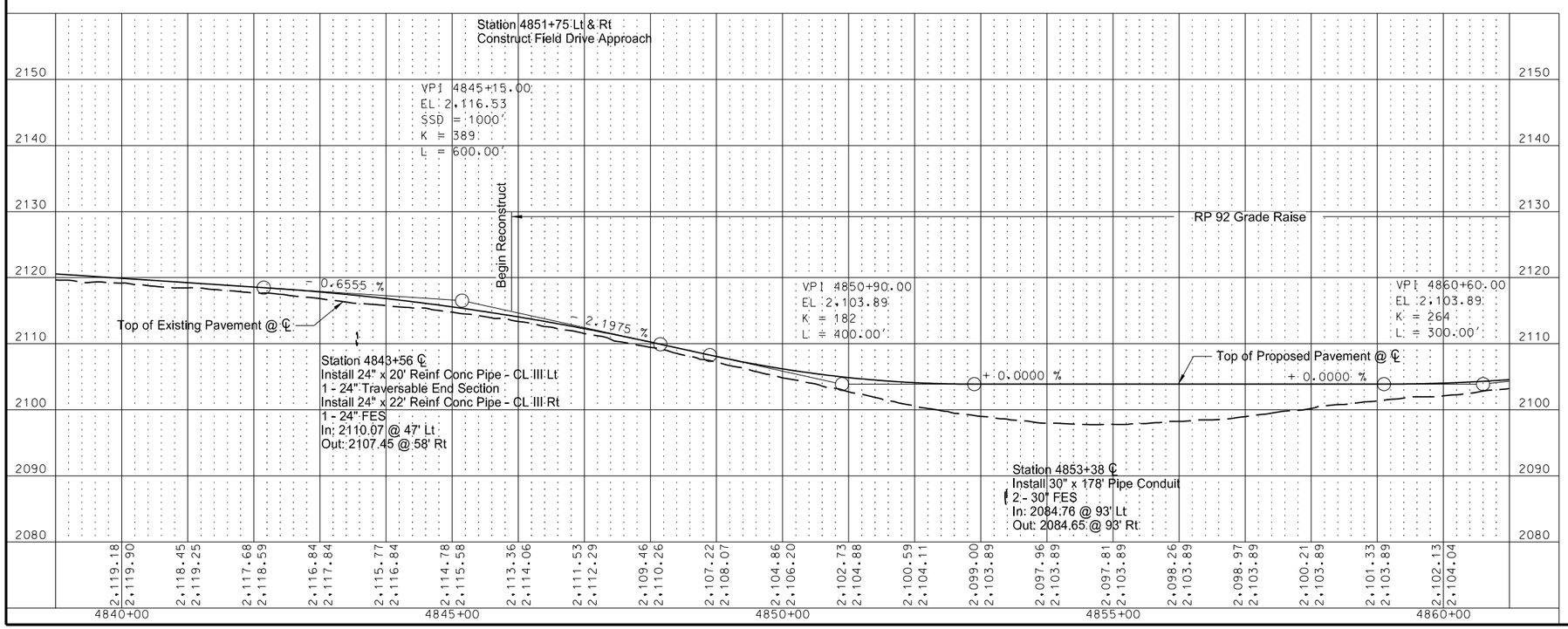

This document was originally issued and sealed by Jeffrey T. Lansink Registration Number PE- 5244, on 11/3/15 and the original document is stored at the North Dakota Department of Transportation

Plan and Profile

ND 23 - ND 28 to County Rd 13

STATE	PROJECT NO.	SECTION NO.	SHEET NO.
ND	SOIB-SOI-4-023(019)087	60	14

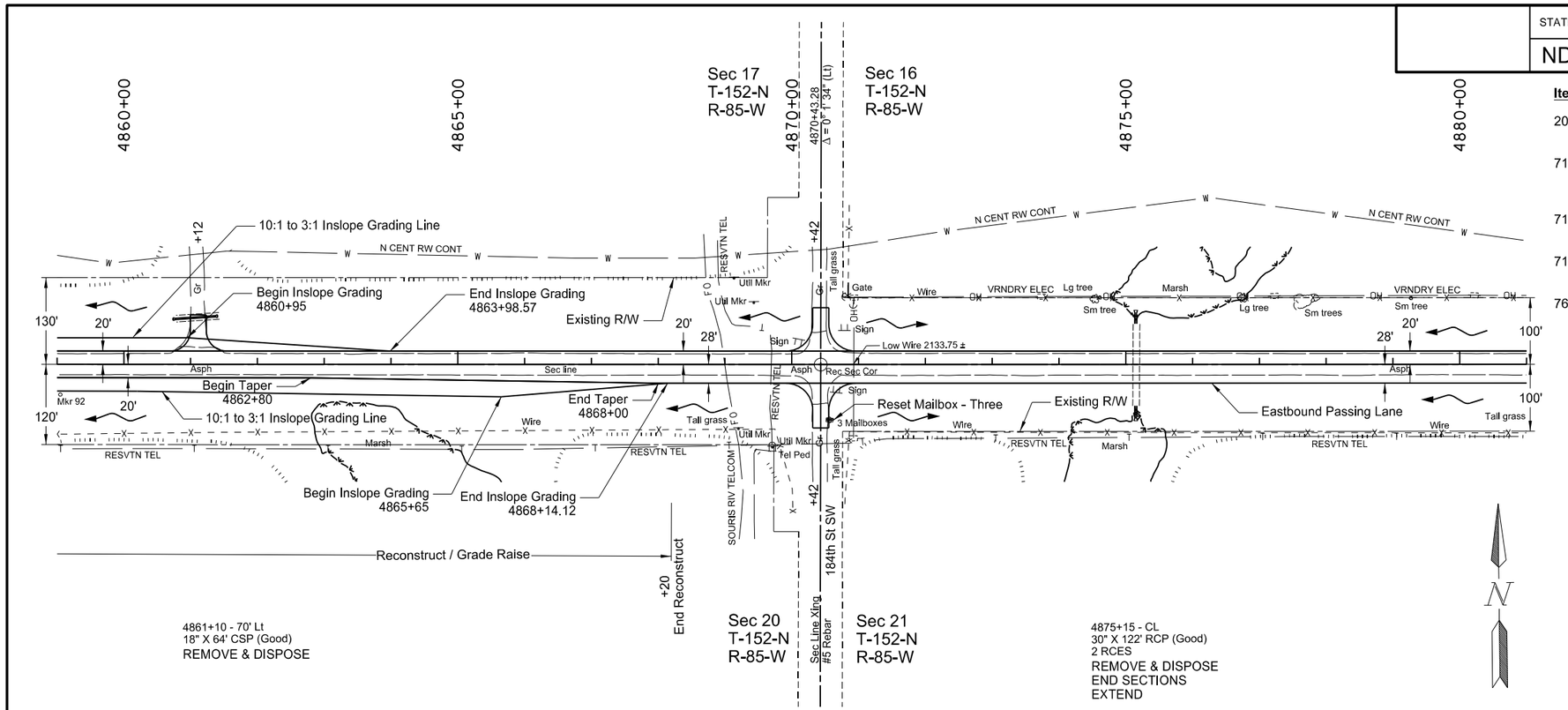

Item	Description	Quantity	Unit
202-0174	REMOVAL OF PIPE ALL TYPES AND SIZES		
	Sta. 4861+10 Lt	64	LF
714-0820	PIPE CONC REINF 30IN CL III		
	Sta. 4875+15 Lt 61' to Lt 75'	16	LF
	Sta. 4875+15 Rt 62' to Rt 78'	14	LF
714-3030	END SECT-CONC REINF 30IN		
	Sta. 4875+15 Lt & Rt	2	EA
714-4106	PIPE CONDUIT 24IN - APPROACH		
	Sta. 4861+12 Lt 72'	60	LF
766-0120	RESET MAILBOX		
	Sta. 4870+56 Rt 83'	3	EA

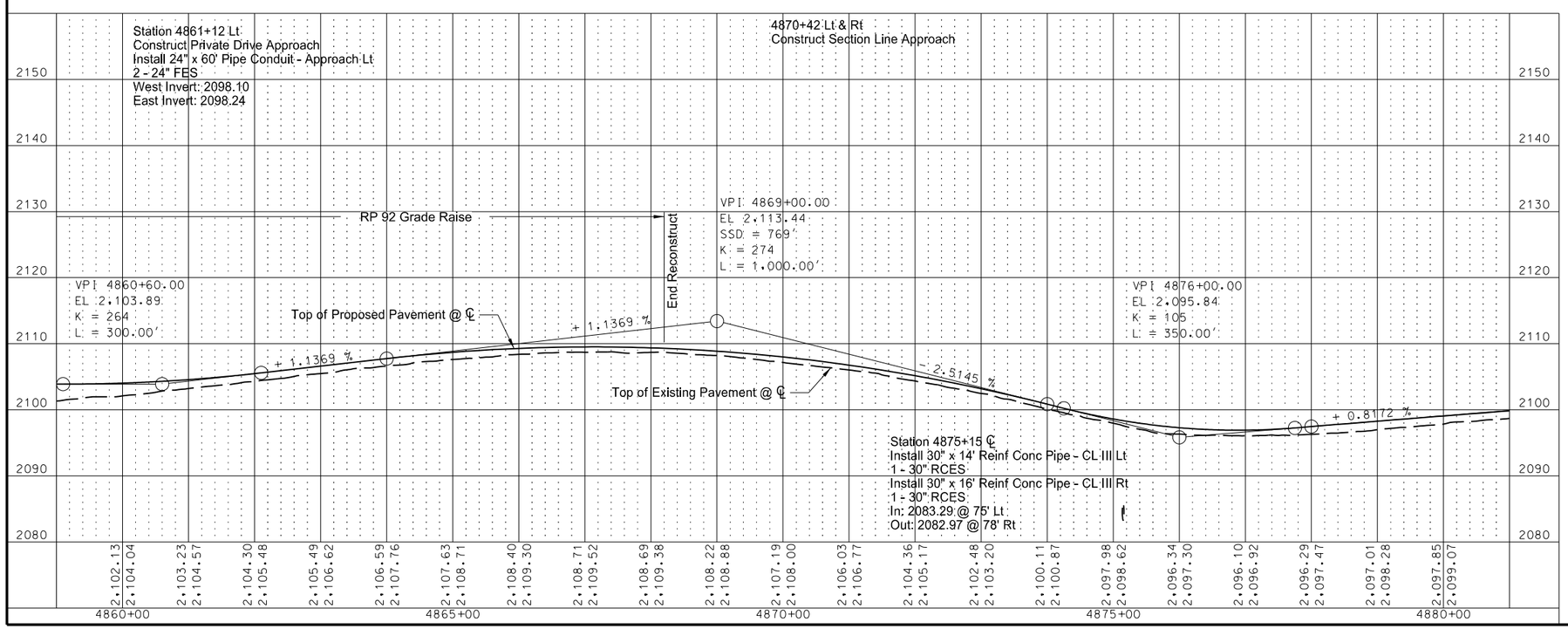

This document was originally issued and sealed by Jeffrey T. Lansink Registration Number PE- 5244, on 11/3/15 and the original document is stored at the North Dakota Department of Transportation

Plan and Profile

ND 23 - ND 28 to County Rd 13

STATE	PROJECT NO.	SECTION NO.	SHEET NO.
ND	SOIB-SOI-4-023(019)087	60	15

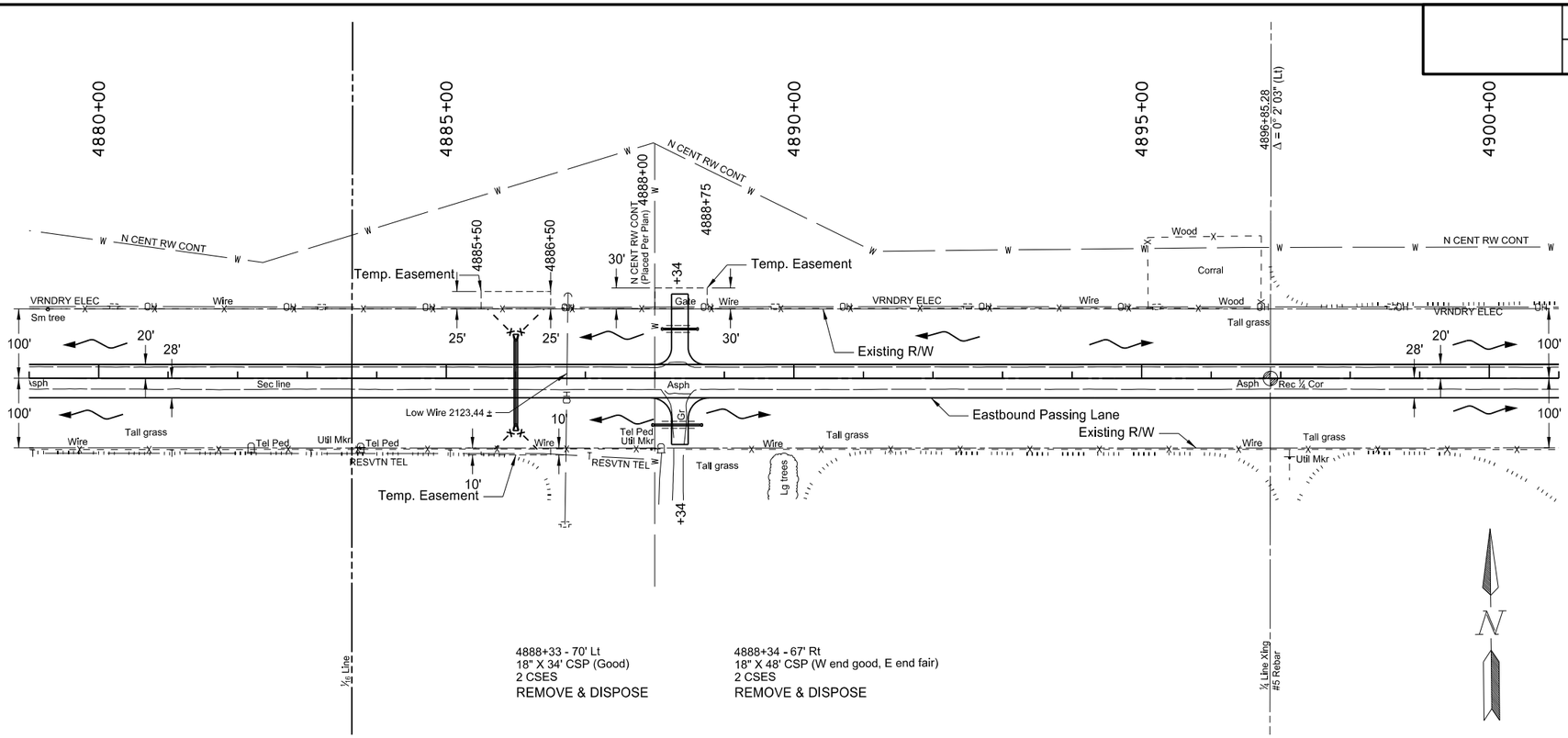

4888+33 - 70' Lt
18" X 34' CSP (Good)
2 CSES
REMOVE & DISPOSE

4888+34 - 67' Rt
18" X 48' CSP (W end good, E end fair)
2 CSES
REMOVE & DISPOSE

Item	Description	Quantity	Unit
202-0174	REMOVAL OF PIPE ALL TYPES AND SIZES		
	Sta. 4888+33 Lt	34	LF
	Sta. 4888+34 Rt	48	LF
714-4106	PIPE CONDUIT 24IN - APPROACH		
	Sta. 4888+34 Lt 71'	46	LF
	Sta. 4888+34 Rt 67'	66	LF
714-9200	CATTLE PASS CONC INTERMED SECTION		
	Sta. 4886+00 Lt 56' to Rt 68'	120	LF
714-9350	END SECTION CONC CATTLE PASS		
	Sta. 4886+00 Lt & Rt	2	EA
752-0100	FENCE BARBED WIRE 3 STRAND		
	Sta. 4886+00 Lt & Rt	240	LF
752-3140	CORNER ASSEMBLY BARBED WIRE		
	Sta. 4886+00 Lt & Rt	4	EA

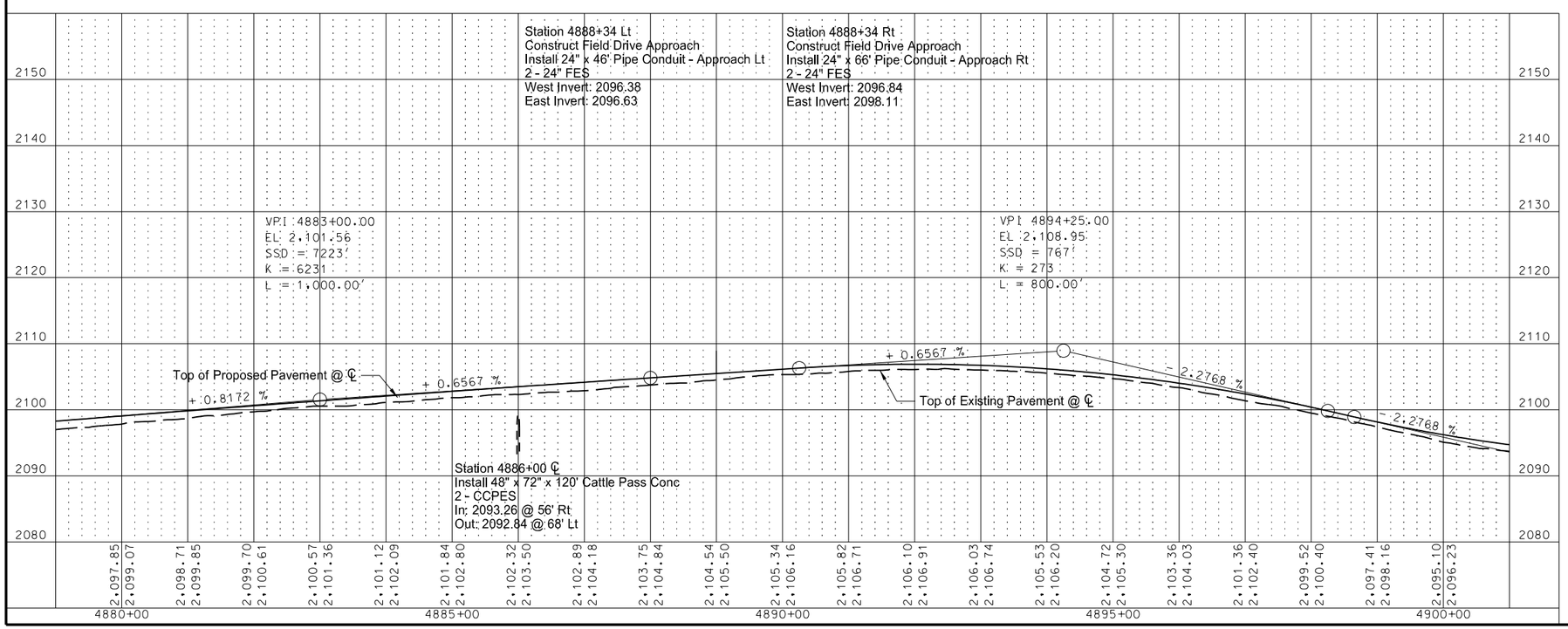

This document was originally issued and sealed by Jeffrey T. Lansink Registration Number PE- 5244, on 11/3/15 and the original document is stored at the North Dakota Department of Transportation

Plan and Profile

ND 23 - ND 28 to County Rd 13

STATE	PROJECT NO.	SECTION NO.	SHEET NO.
ND	SOIB-SOI-4-023(019)087	60	16

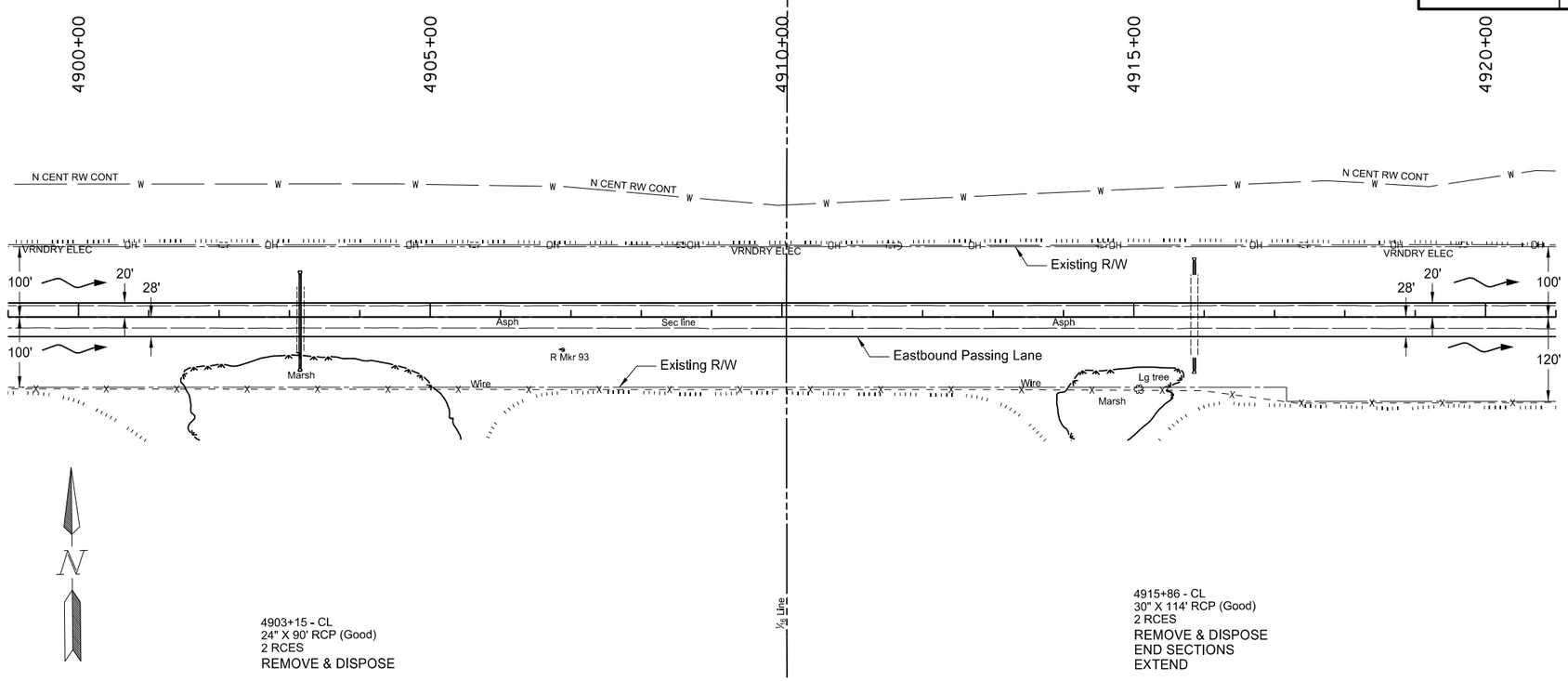

Item	Description	Quantity	Unit
202-0169	REMOVAL OF END SECTION - ALL TYPES & SIZES		
	Sta. 4915+86 Lt & Rt	2	EA
202-0174	REMOVAL OF PIPE ALL TYPES AND SIZES		
	Sta. 4903+15 CL	90	LF
714-0820	PIPE CONC REINF 30IN CL III		
	Sta. 4915+86 Lt 60' to Lt 78'	18	LF
	Sta. 4915+86 Rt 58' to Rt 74'	16	LF
714-3030	END SECT-CONC REINF 30IN		
	Sta. 4915+86 Lt & Rt	2	EA
714-4110	PIPE CONDUIT 30IN		
	Sta. 4903+15 Lt 73' to Rt 61'	126	LF

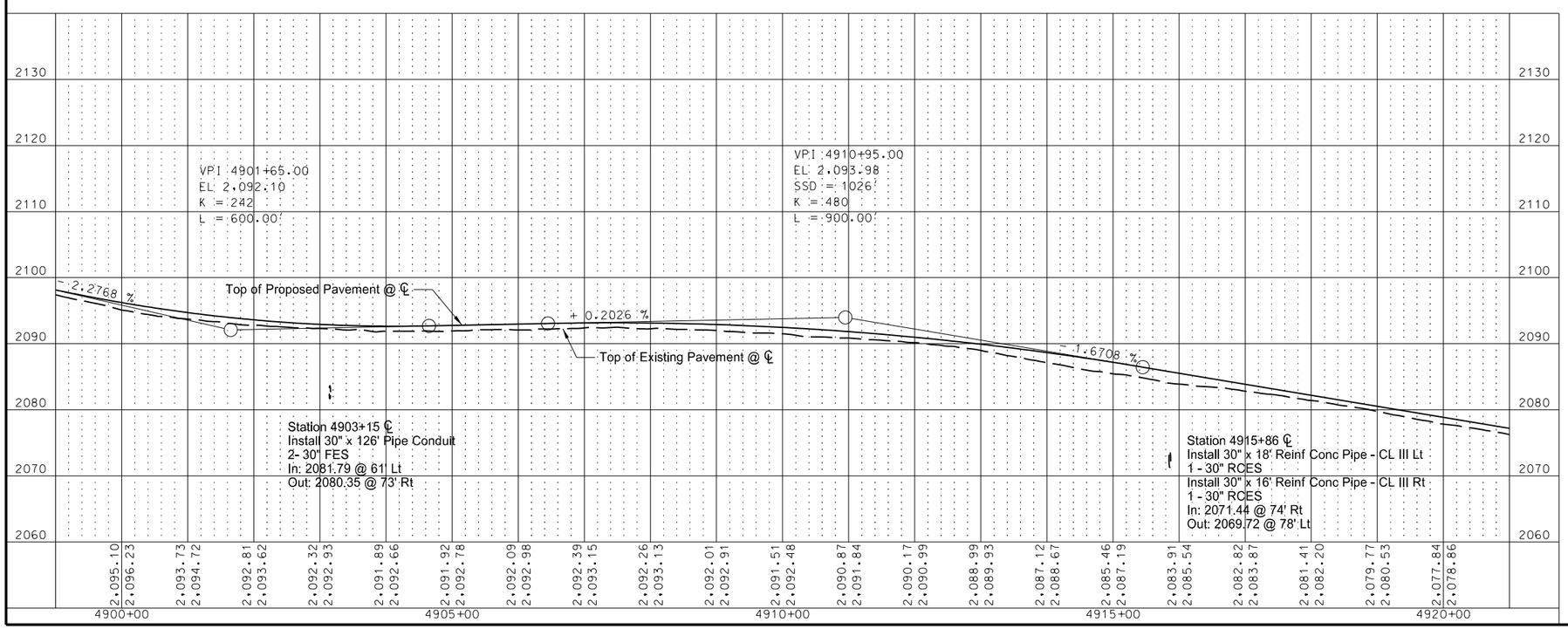

This document was originally issued and sealed by Jeffrey T. Lansink Registration Number PE- 5244, on 11/3/15 and the original document is stored at the North Dakota Department of Transportation

Plan and Profile

ND 23 - ND 28 to County Rd 13

STATE	PROJECT NO.	SECTION NO.	SHEET NO.
ND	SOIB-SOI-4-023(019)087	60	17

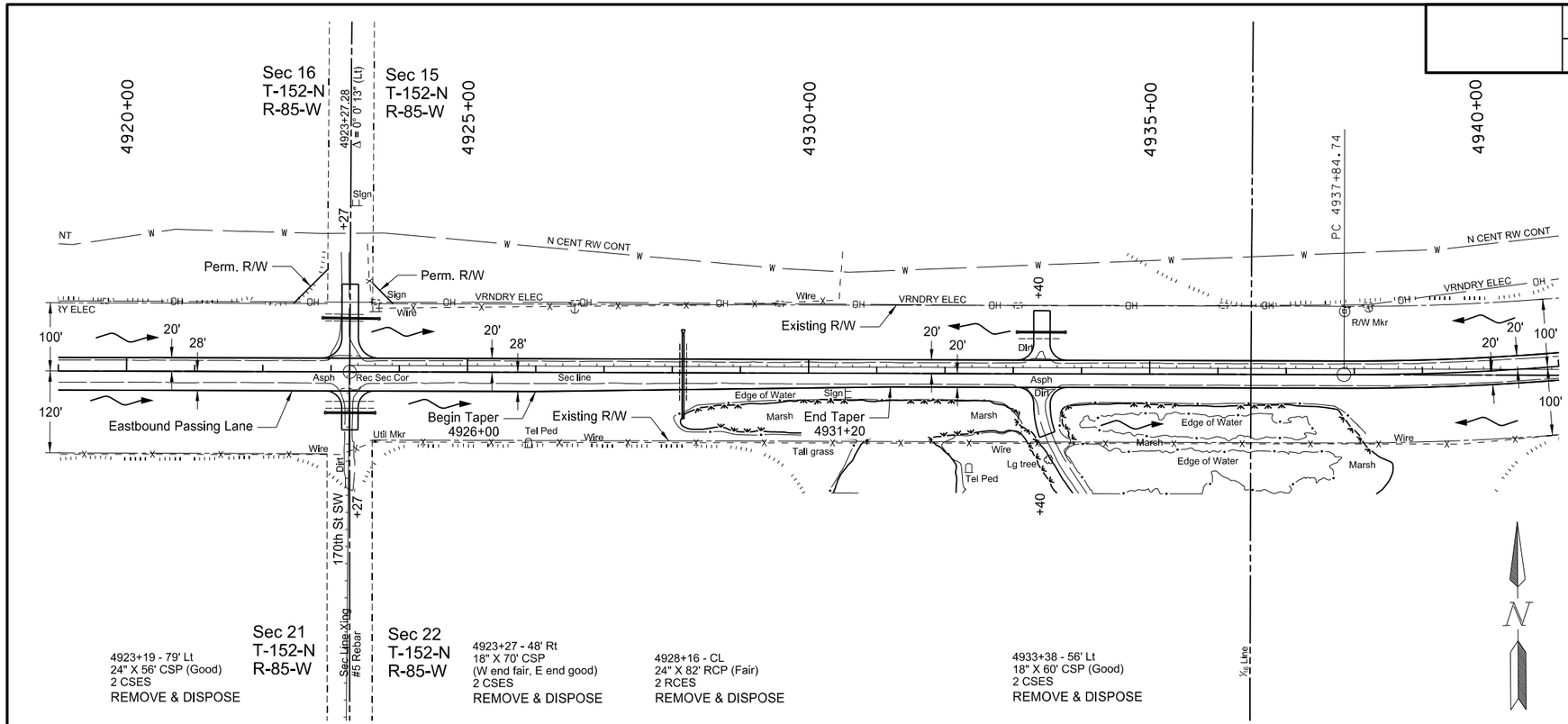

Item	Description	Quantity	Unit
202-0174	REMOVAL OF PIPE ALL TYPES AND SIZES		
	Sta. 4923+19 Lt	56	LF
	Sta. 4923+27 Rt	70	LF
	Sta. 4928+16 CL	82	LF
	Sta. 4933+38 Lt	60	LF
714-4106	PIPE CONDUIT 24IN - APPROACH		
	Sta. 4923+27 Lt 78'	78	LF
	Sta. 4923+27 Rt 60'	68	LF
	Sta. 4933+40 Lt 61'	66	LF
714-4110	PIPE CONDUIT 30IN		
	Sta. 4928+16 Lt 59' to Rt 60'	114	LF
	END SET-TRAVERSABLE		
	Sta. 4928+16 Rt	1	EA

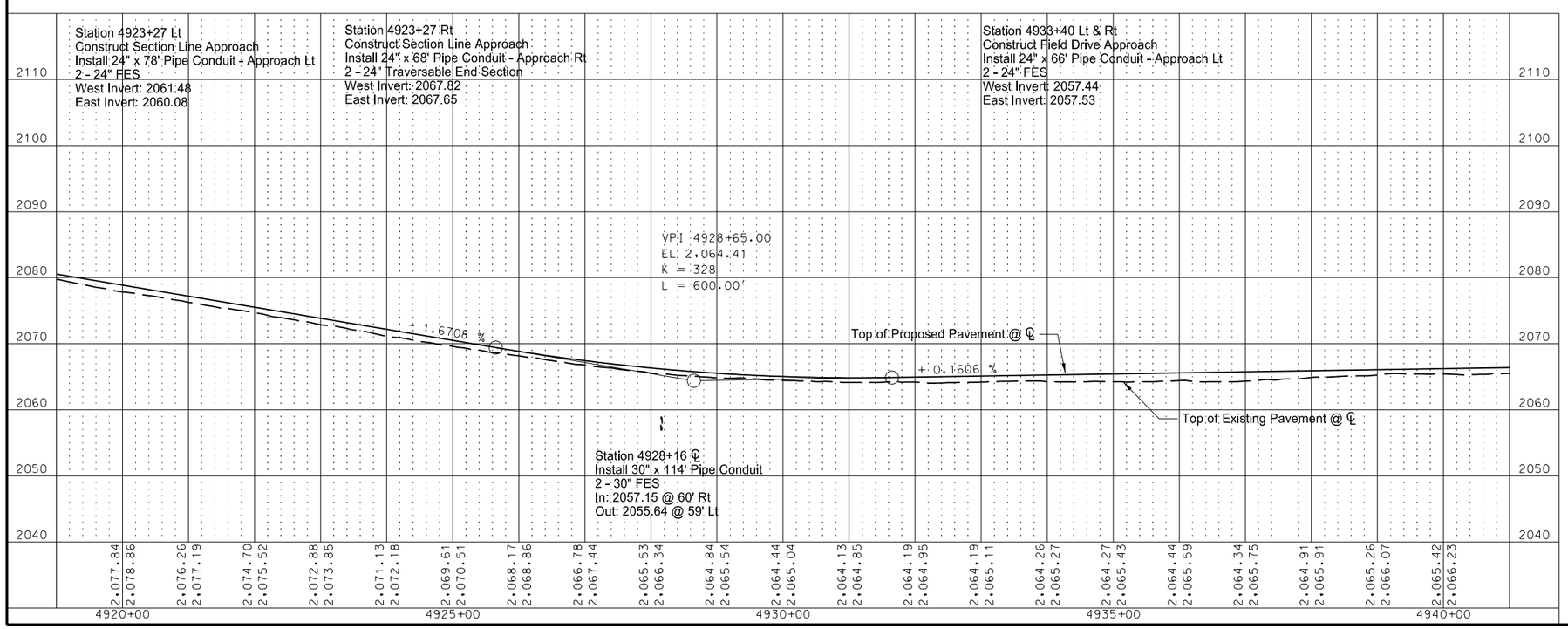

This document was originally issued and sealed by Jeffrey T. Lansink Registration Number PE- 5244, on 11/3/15 and the original document is stored at the North Dakota Department of Transportation

Plan and Profile

ND 23 - ND 28 to County Rd 13

STATE	PROJECT NO.	SECTION NO.	SHEET NO.
ND	SOIB-SOI-4-023(019)087	60	18

Item	Description	Quantity	Unit
202-0174	REMOVAL OF PIPE ALL TYPES AND SIZES		
	Sta. 4947+58 Rt	50	LF
	Sta. 4957+36 CL	94	LF
714-4106	PIPE CONDUIT 24IN - APPROACH		
	Sta. 4947+58 Rt 63'	70	LF
714-4110	PIPE CONDUIT 30IN		
	Sta. 4957+36 Lt 61' to Rt 71'	124	LF

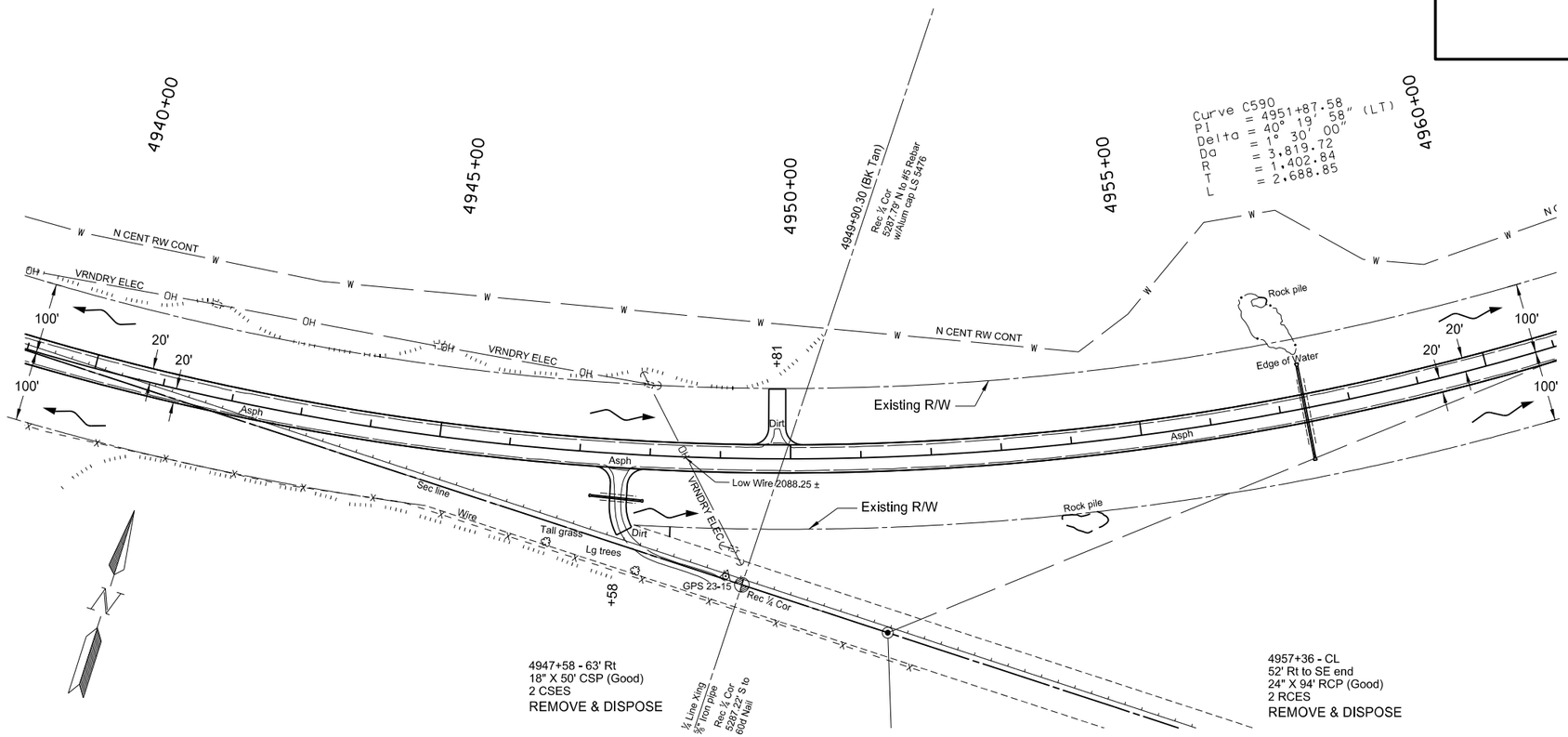

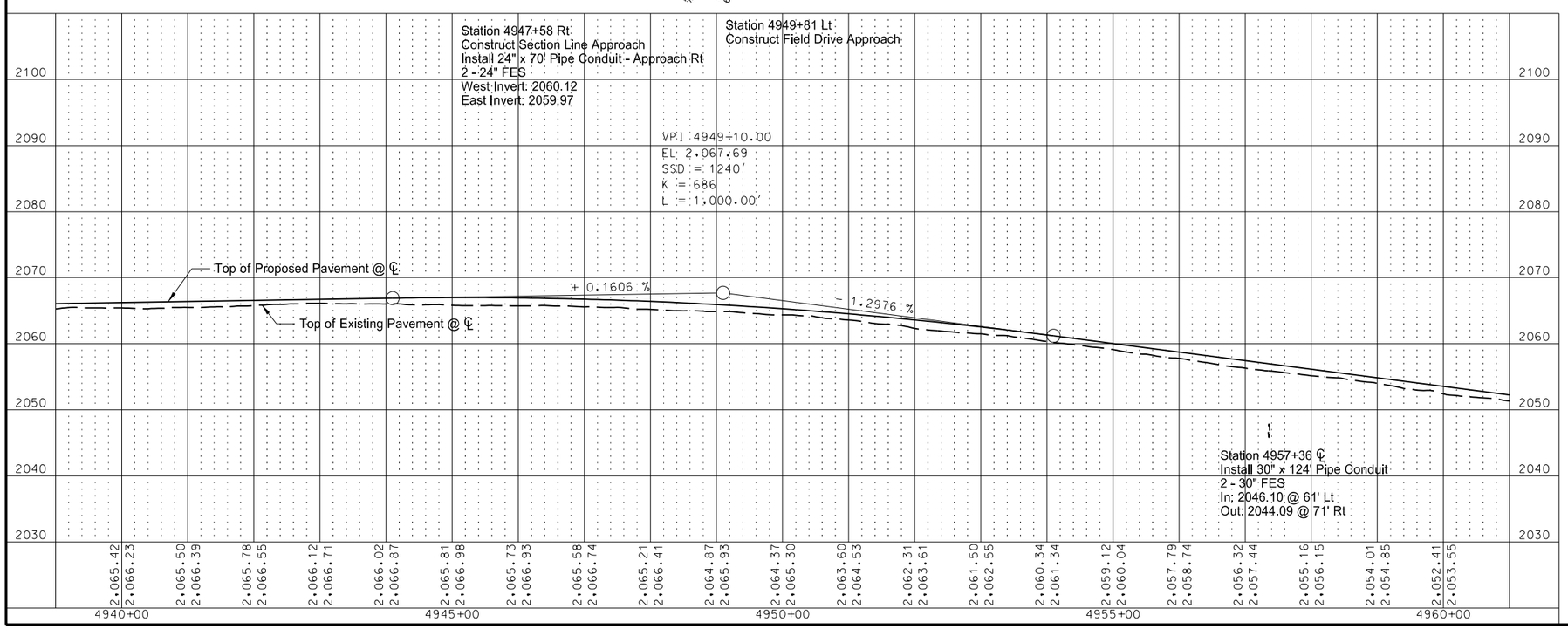

This document was originally issued and sealed by Jeffrey T. Lansink Registration Number PE- 5244, on 11/3/15 and the original document is stored at the North Dakota Department of Transportation

Plan and Profile

ND 23 - ND 28 to County Rd 13

STATE	PROJECT NO.	SECTION NO.	SHEET NO.
ND	SOIB-SOI-4-023(019)087	60	19

Item	Description	Quantity	Unit
202-0169	REMOVAL OF END SECTION - ALL TYPES & SIZES		
	Sta. 4968+66 Lt & Rt	2	EA
714-0820	PIPE CONC REINF 30IN CL III		
	Sta. 4968+66 Lt 59' to Lt 75'	16	LF
	Sta. 4968+66 Rt 60' to Rt 78'	18	LF
714-3030	END SECT - CONC REINF 30IN		
	Sta 4968+66 Lt & Rt	2	EA

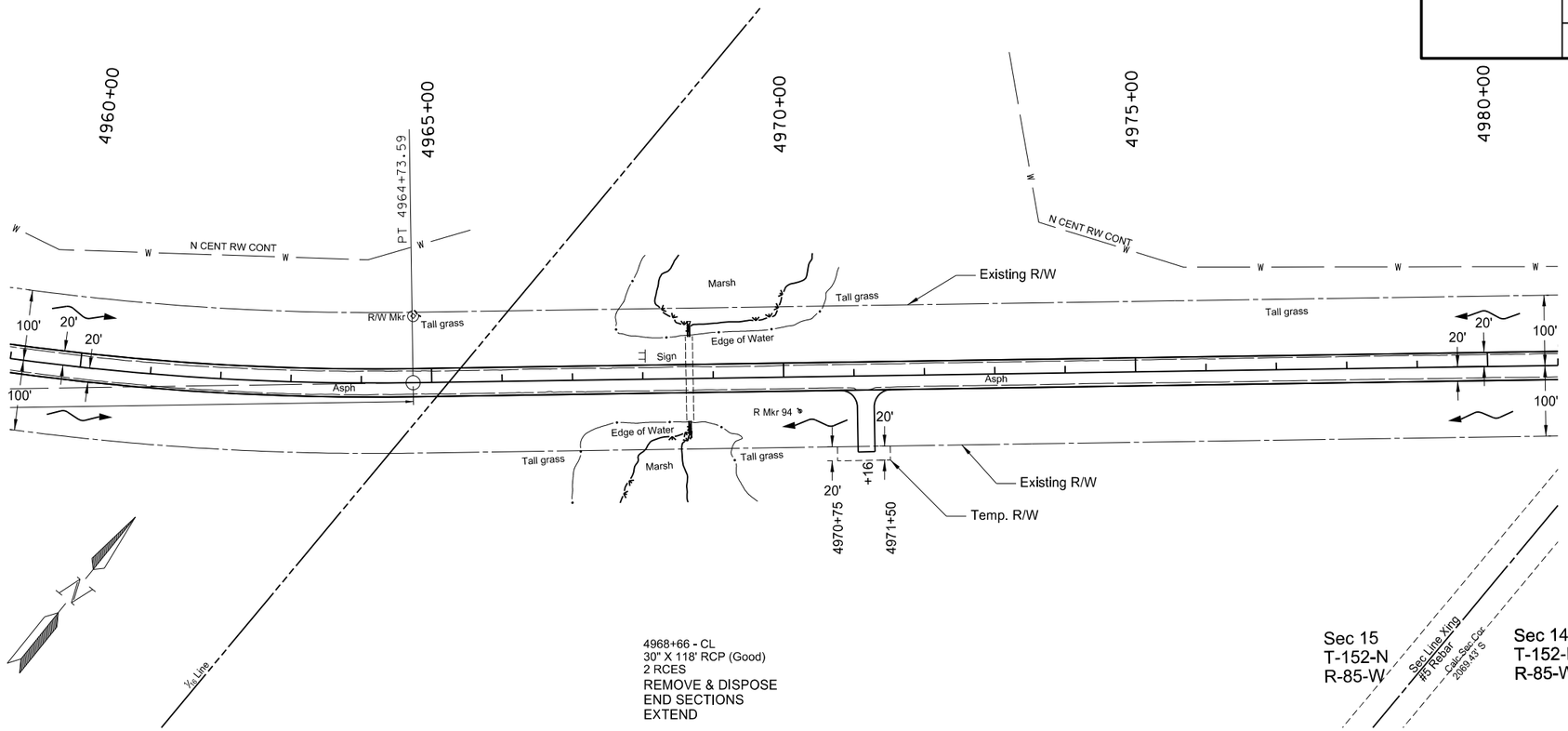

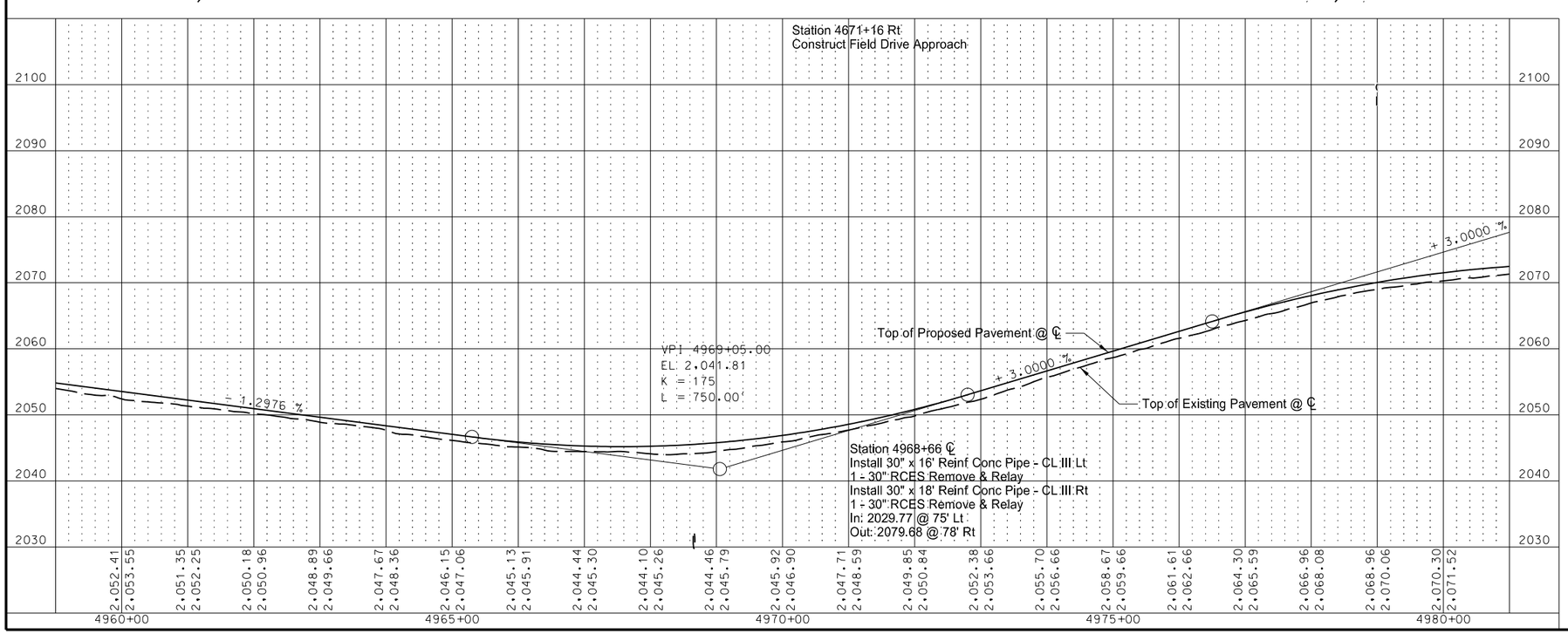

This document was originally issued and sealed by Jeffrey T. Lansink Registration Number PE- 5244, on 11/3/15 and the original document is stored at the North Dakota Department of Transportation

Plan and Profile

ND 23 - ND 28 to County Rd 13

STATE	PROJECT NO.	SECTION NO.	SHEET NO.
ND	SOIB-SOI-4-023(019)087	60	20

Item	Description	Quantity	Unit
202-0174	REMOVAL OF PIPE ALL TYPES AND SIZES		
	Sta. 4990+88 Lt	58	LF
	Sta. 4995+16 CL	84	LF
	Sta. 4998+56 Rt	56	LF
714-4106	PIPE CONDUIT 24IN - APPROACH		
	Sta. 4998+66 Rt 65'	62	LF
714-4110	PIPE CONDUIT 30IN		
	Sta. 4995+16 Lt 69' to Rt 54'	118	LF
	END SECT-TRAVERSABLE		
	Sta. 4995+16 Rt	1	EA
766-0120	RESET MAILBOX		
	Sta. 4998+94 Lt 90'	1	EA

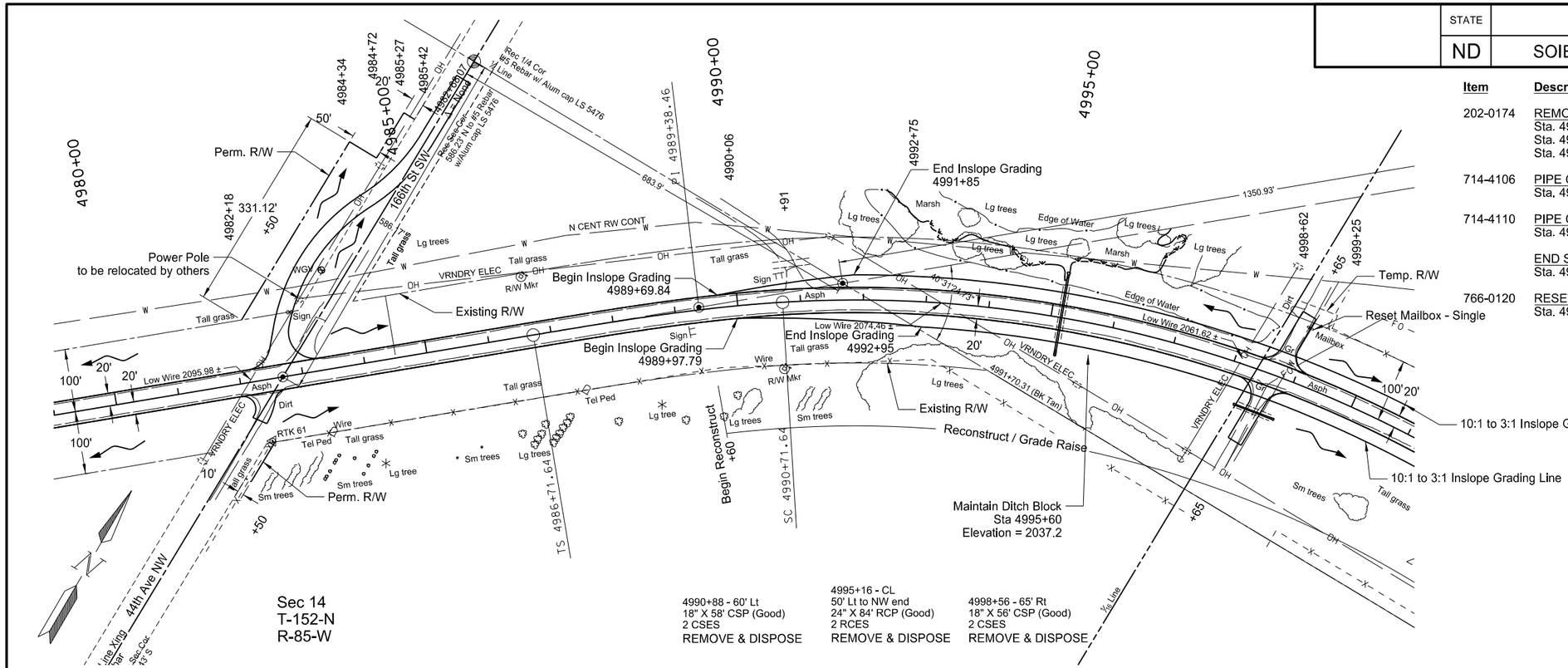

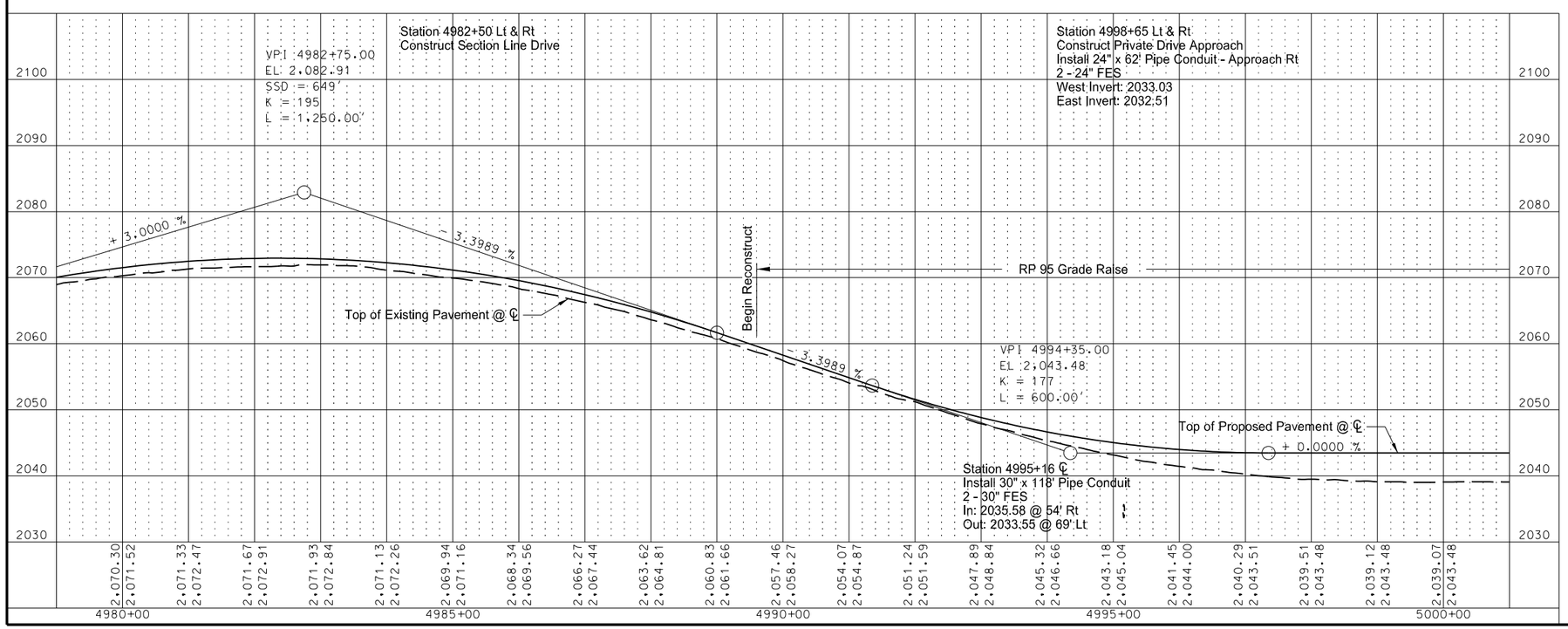

This document was originally issued and sealed by Jeffrey T. Lansink Registration Number PE- 5244, on 11/3/15 and the original document is stored at the North Dakota Department of Transportation

Plan and Profile

ND 23 - ND 28 to County Rd 13

STATE	PROJECT NO.	SECTION NO.	SHEET NO.
ND	SOIB-SOI-4-023(019)087	60	21

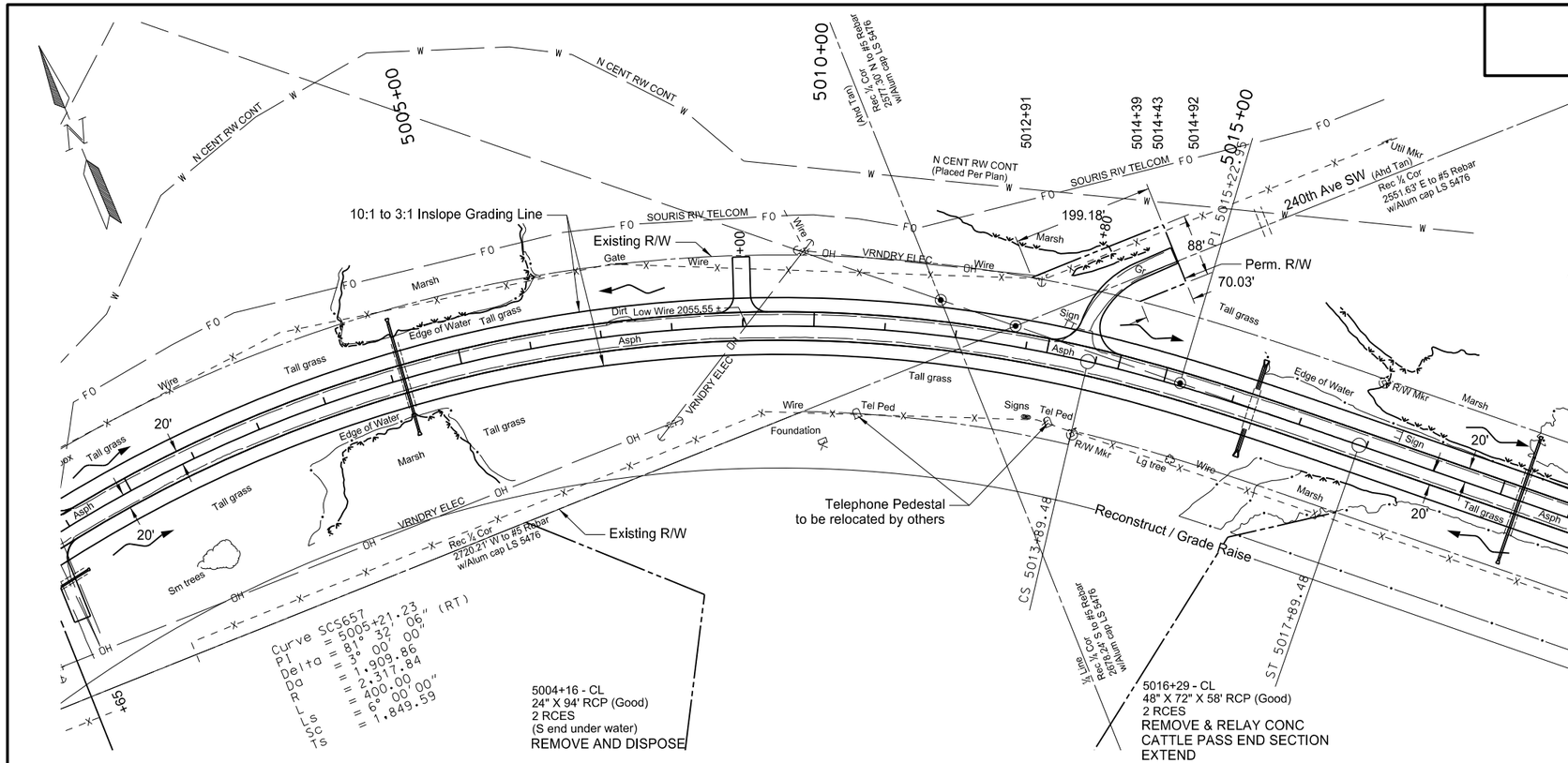

Item	Description	Quantity	Unit
202-0174	REMOVAL OF PIPE ALL TYPES AND SIZES		
	Sta. 5004+16 CL	94	LF
714-4110	PIPE CONDUIT 30IN		
	Sta. 5004+16 Lt 84' to Rt 78'	154	LF
714-9200	CATTLE PASS CONC INTERMED SECTION		
	Sta. 5016+29 Lt 28' to Lt 62'	34	LF
	Sta. 5016+29 Rt 30' to Rt 62'	32	LF
714-9611	REMOVE & RELAY CONC CATTLE PASS END SECTION		
	Sta. 5016+29 Lt & Rt	2	EA

Note: Contractor to cut back existing embankment to R/W

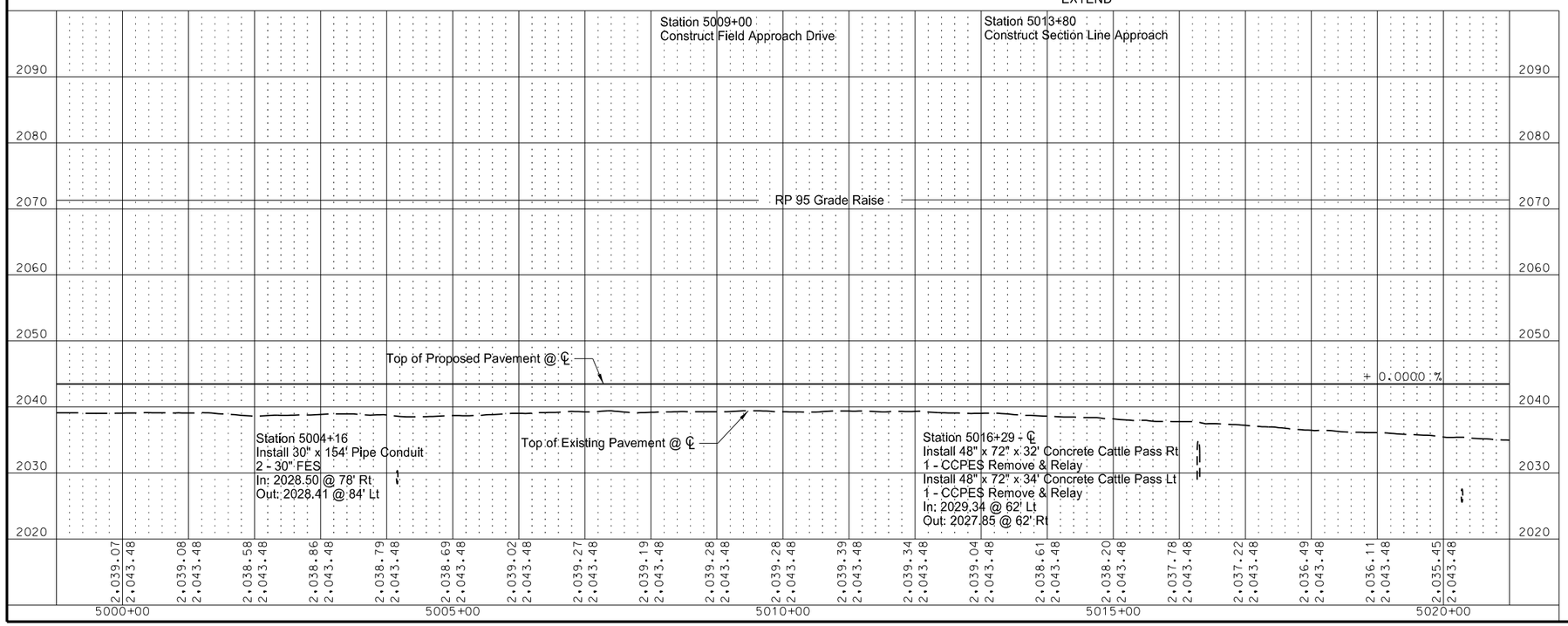

This document was originally issued and sealed by Jeffrey T. Lansink Registration Number PE- 5244, on 11/3/15 and the original document is stored at the North Dakota Department of Transportation

Plan and Profile

ND 23 - ND 28 to County Rd 13

STATE	PROJECT NO.	SECTION NO.	SHEET NO.
ND	SOIB-SOI-4-023(019)087	60	22

Item	Description	Quantity	Unit
202-0174	REMOVAL OF PIPE ALL TYPES AND SIZES Sta. 5020+28 CL	96	LF
714-4110	PIPE CONDUIT 30IN Sta. 5020+28 Lt 95' to Rt 93'	180	LF

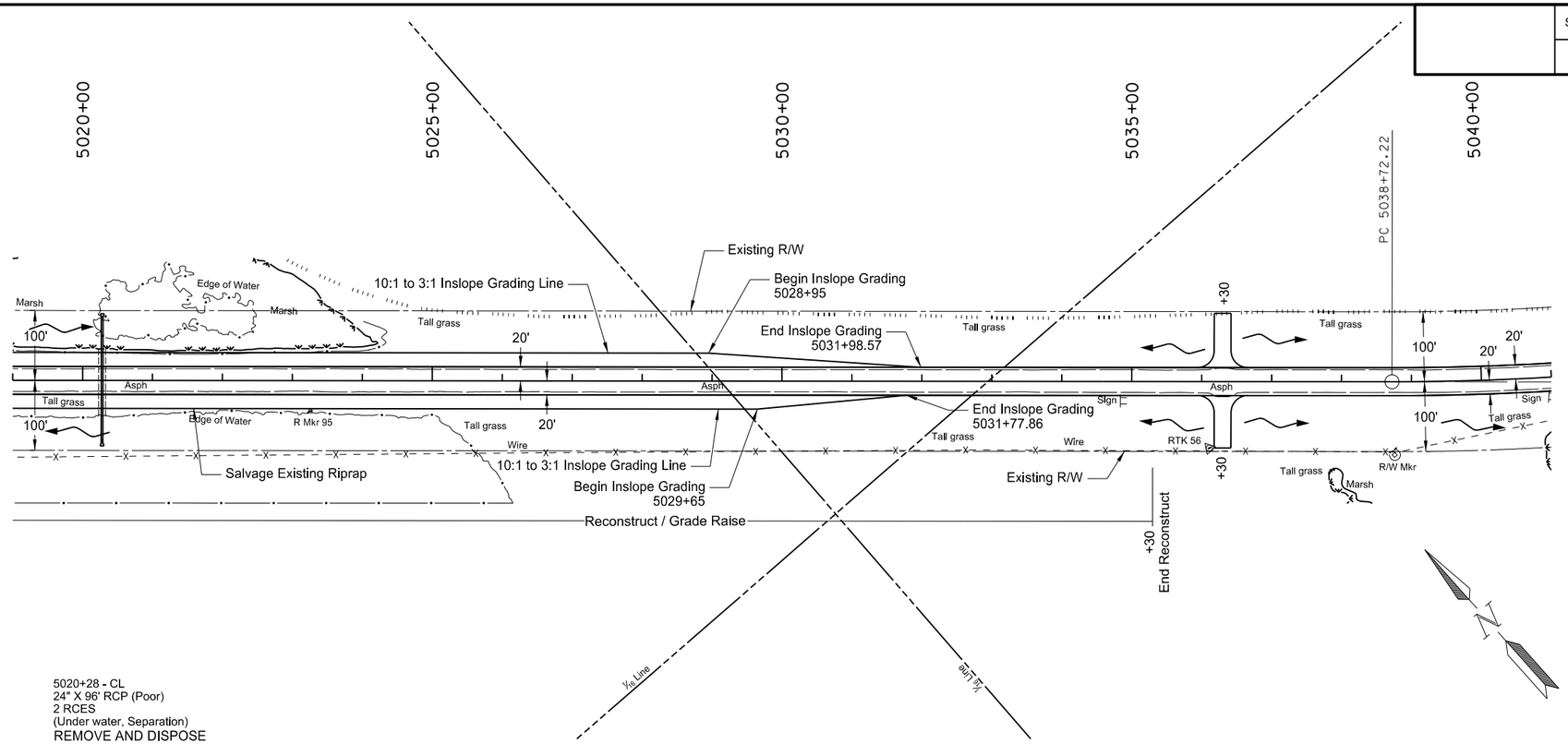

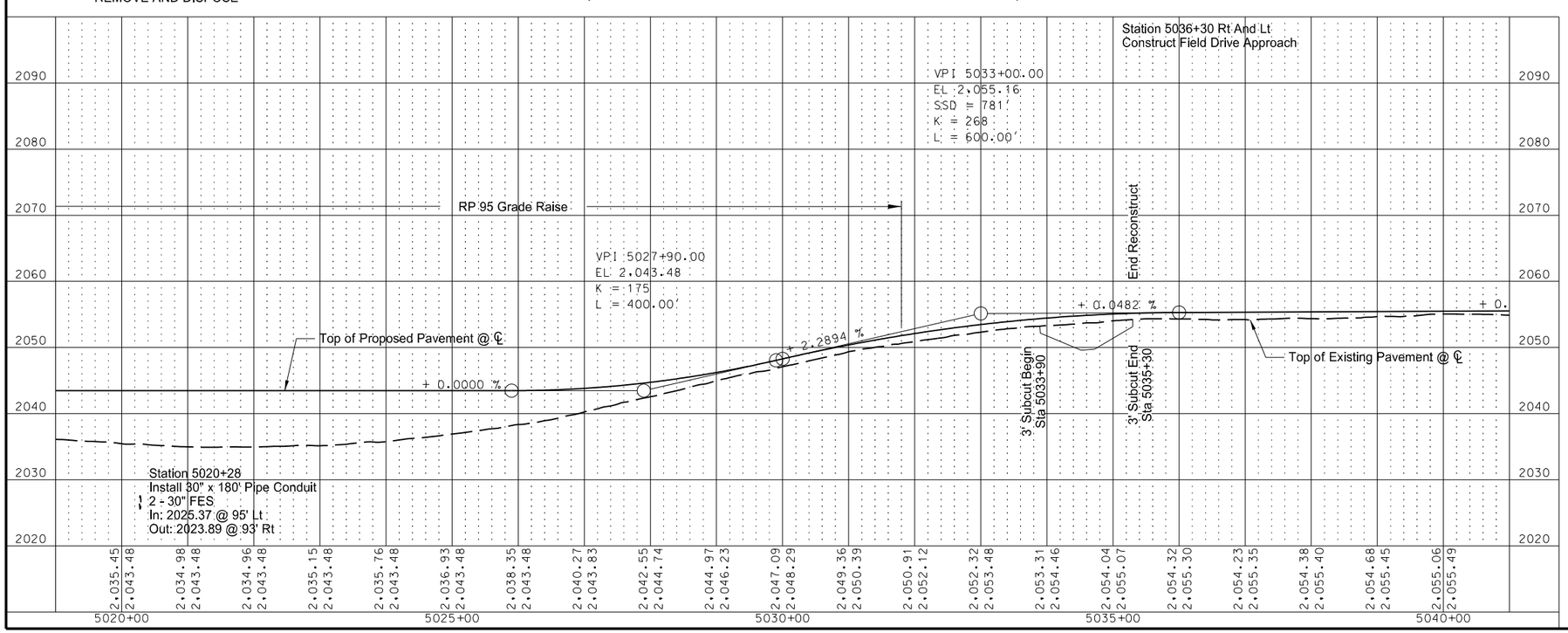

This document was originally issued and sealed by Jeffrey T. Lansink Registration Number PE- 5244, on 11/3/15 and the original document is stored at the North Dakota Department of Transportation

Plan and Profile

ND 23 - ND 28 to County Rd 13

STATE	PROJECT NO.	SECTION NO.	SHEET NO.
ND	SOIB-SOI-4-023(019)087	60	23

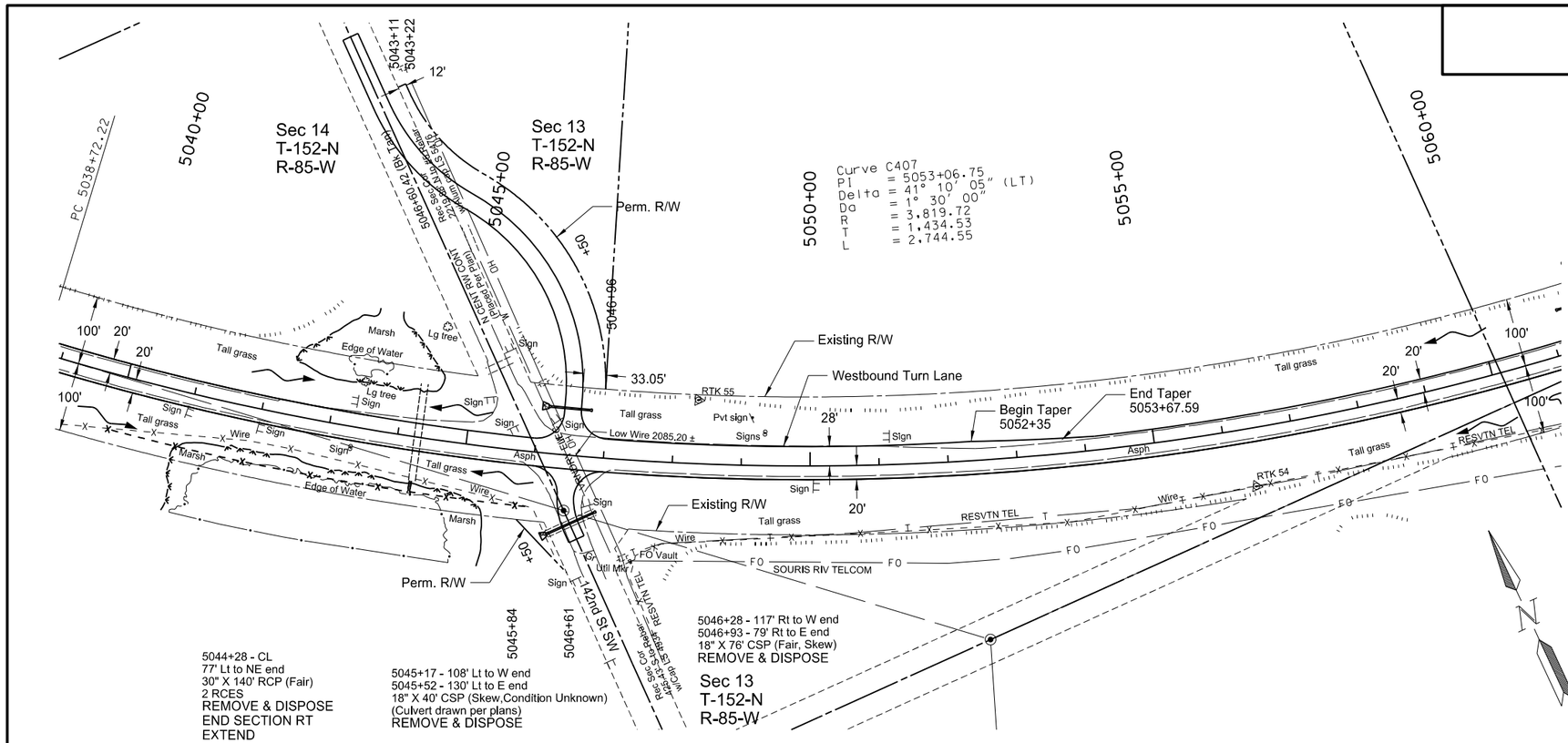

Item	Description	Quantity	Unit
202-0169	REMOVAL OF END SECTION - ALL TYPES & SIZES		
	Sta. 5044+28 Lt & Rt	2	EA
202-0174	REMOVAL OF PIPE ALL TYPES AND SIZES		
	Sta. 5045+17 Lt	40	LF
	Sta. 5046+28 Rt	76	LF
256-0201	RIPRAP GRADE II		
	Sta. 5046+50 Rt	10.2	TON
	Sta. 5046+60 Lt	10.2	TON
709-0155	GEOSYNTHETIC MATERIAL TYPE RR		
	Sta. 5046+50 Rt	20	SY
	Sta. 5046+60 Lt	20	SY
714-0820	PIPE CONC REINF 30IN CLIII		
	Sta. 5044+28 Rt 64' to Rt 76'	12	LF
714-3030	END SECT - CONC REINF 30IN		
	Sta. 5044+28 Rt	1	EA
714-4106	PIPE CONDUIT 24IN - APPROACH		
	Sta. 5046+50 Lt 68'	56	LF
	Sta. 5046+50 Rt 92'	72	LF

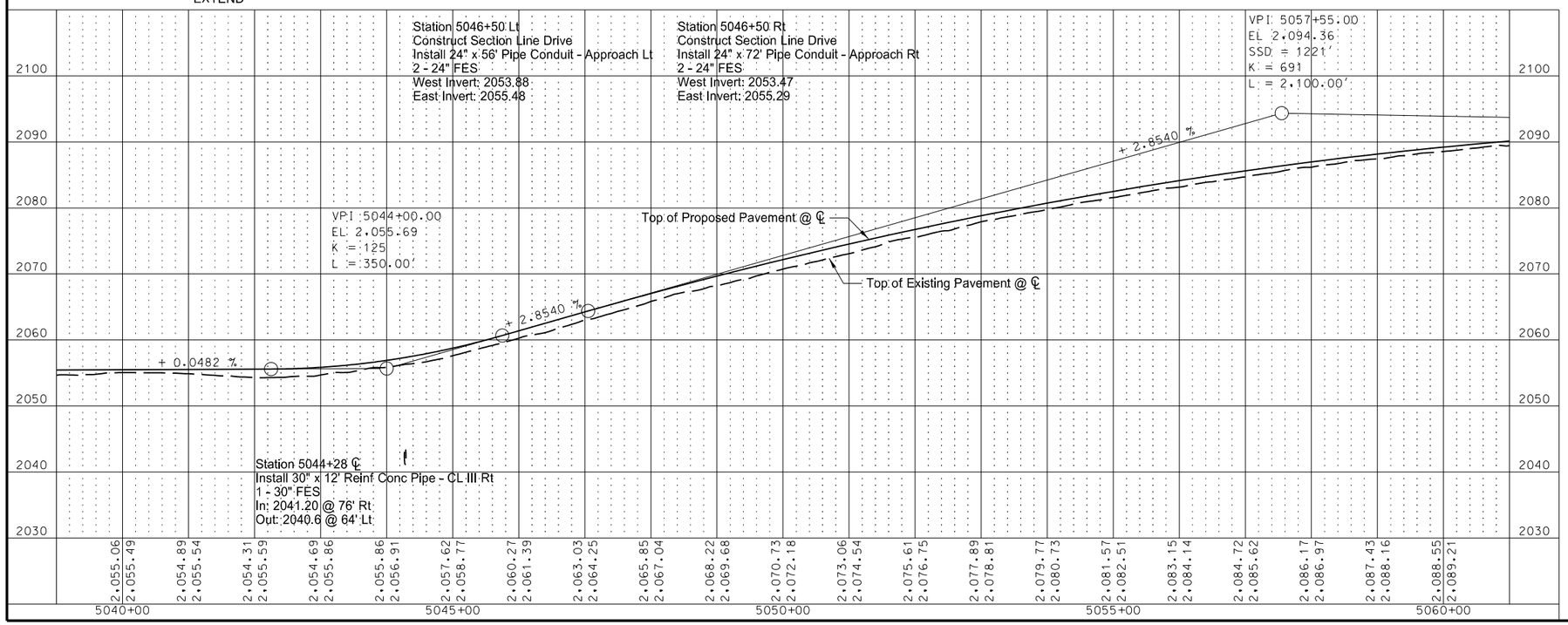

This document was originally issued and sealed by Jeffrey T. Lansink Registration Number PE- 5244, on 11/3/15 and the original document is stored at the North Dakota Department of Transportation

Plan and Profile

ND 23 - ND 28 to County Rd 13

STATE	PROJECT NO.	SECTION NO.	SHEET NO.
ND	SOIB-SOI-4-023(019)087	60	24

Item	Description	Quantity	Unit
714-4106	PIPE CONDUIT 24IN - APPROACH Sta. 5061+50 Lt 65'	58	LF

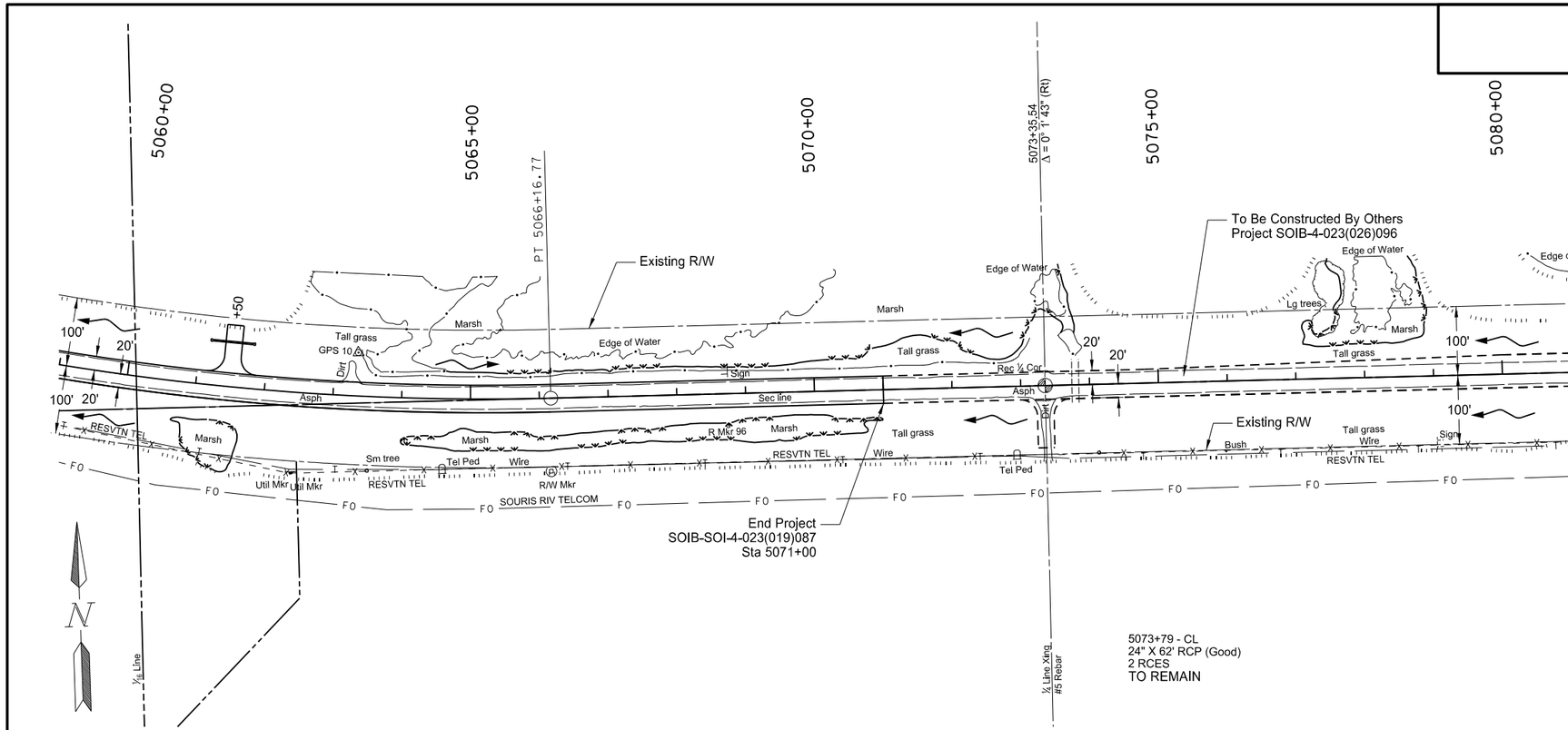

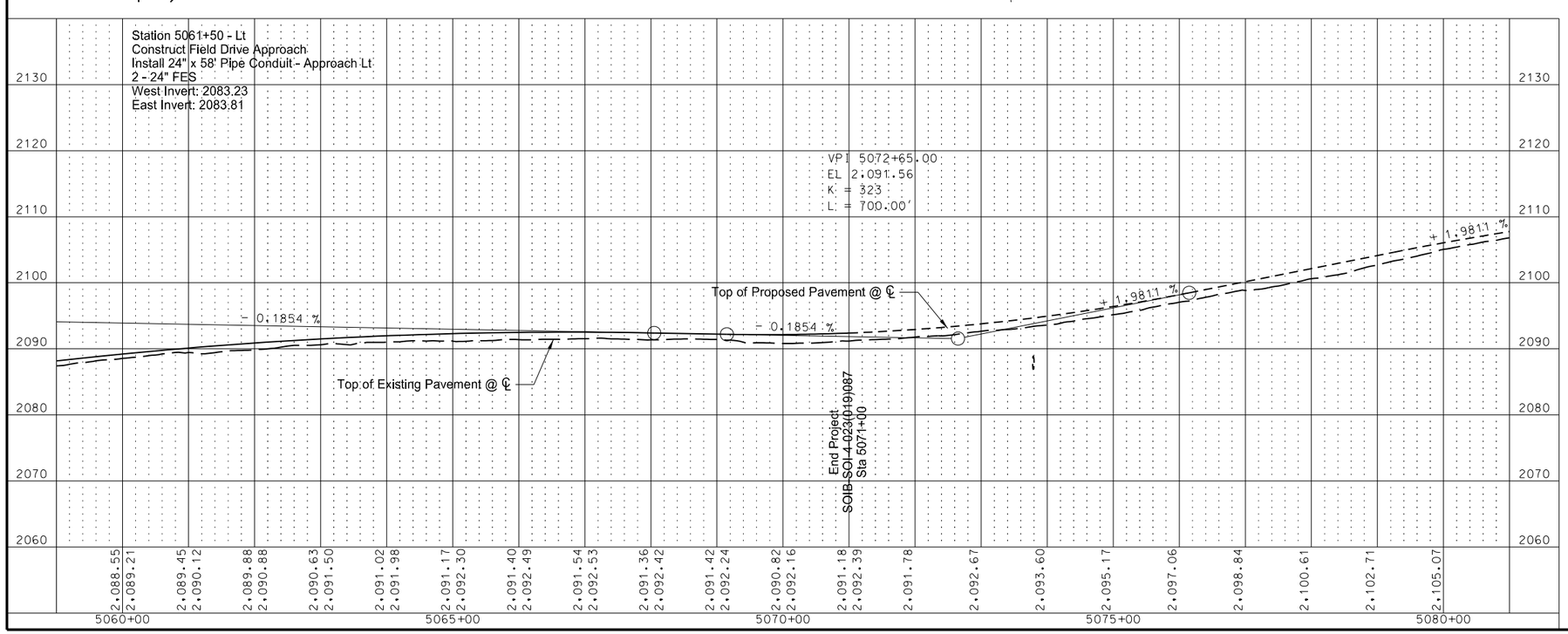

This document was originally issued and sealed by Jeffrey T. Lansink Registration Number PE- 5244, on 11/3/15 and the original document is stored at the North Dakota Department of Transportation

Plan and Profile

ND 23 - ND 28 to County Rd 13

STATE	PROJECT NO.	SECTION NO.	SHEET NO.
ND	SOIB-SOI-4-023(019)087	60	25

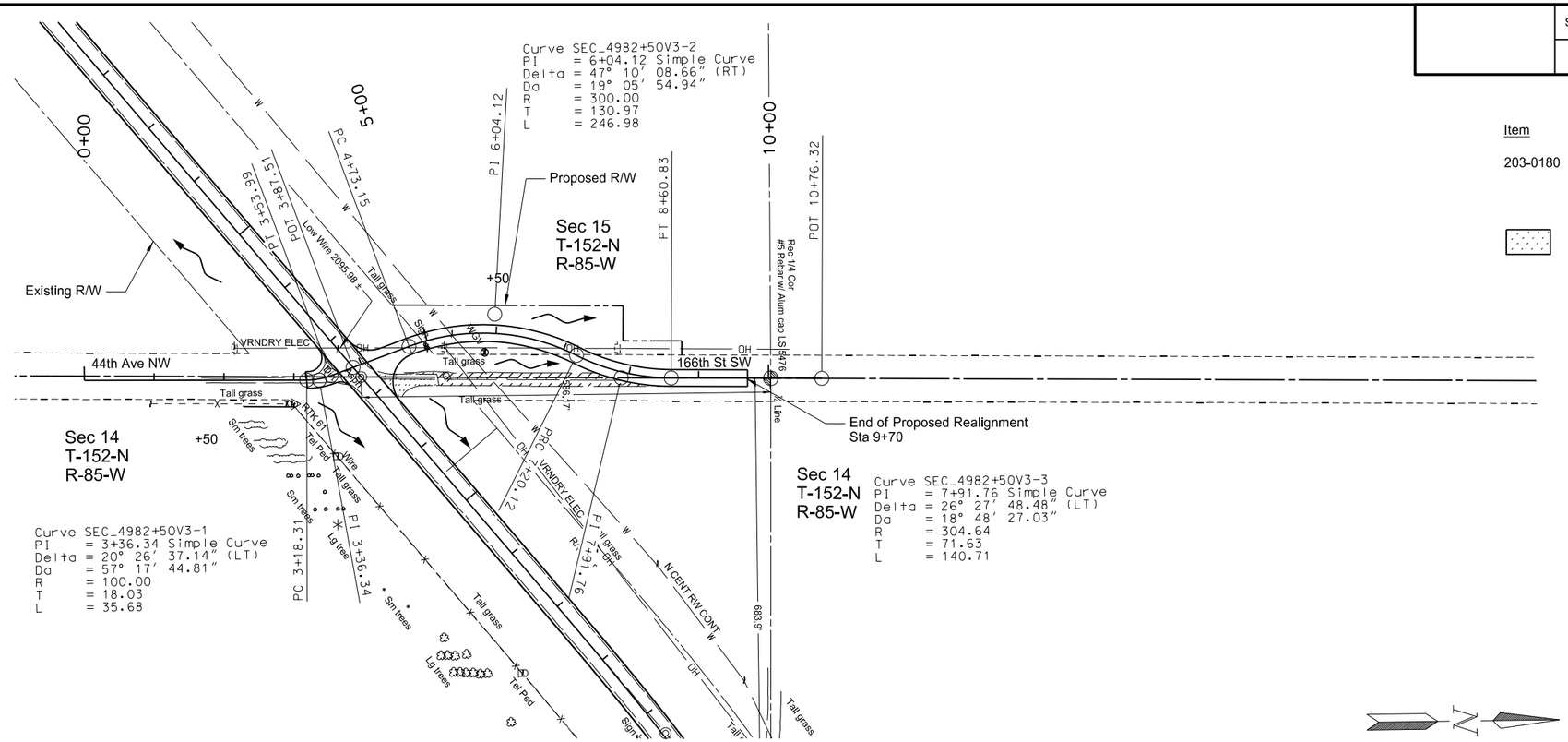

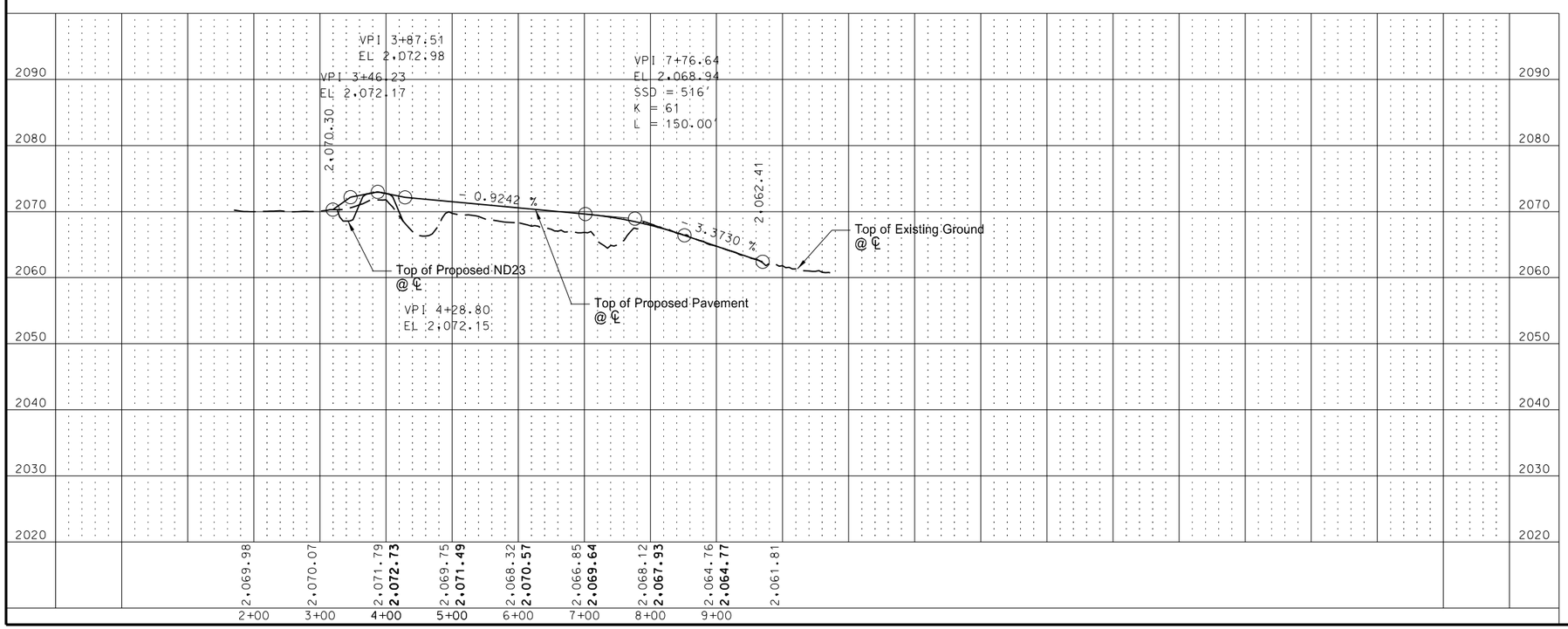

Item	Description	Quantity	Unit
203-0180	ROADWAY OBLITERATION Sta 4+21.91 to Sta 7+79.82	341	LF

Roadway Obliteration

This document was originally issued and sealed by Jeffrey T. Lansink Registration Number PE- 5244, on 11/3/15 and the original document is stored at the North Dakota Department of Transportation

Plan and Profile

ND 23 - ND 28 to County Rd 13

STATE	PROJECT NO.	SECTION NO.	SHEET NO.
ND	SOIB-SOI-4-023(019)087	60	26

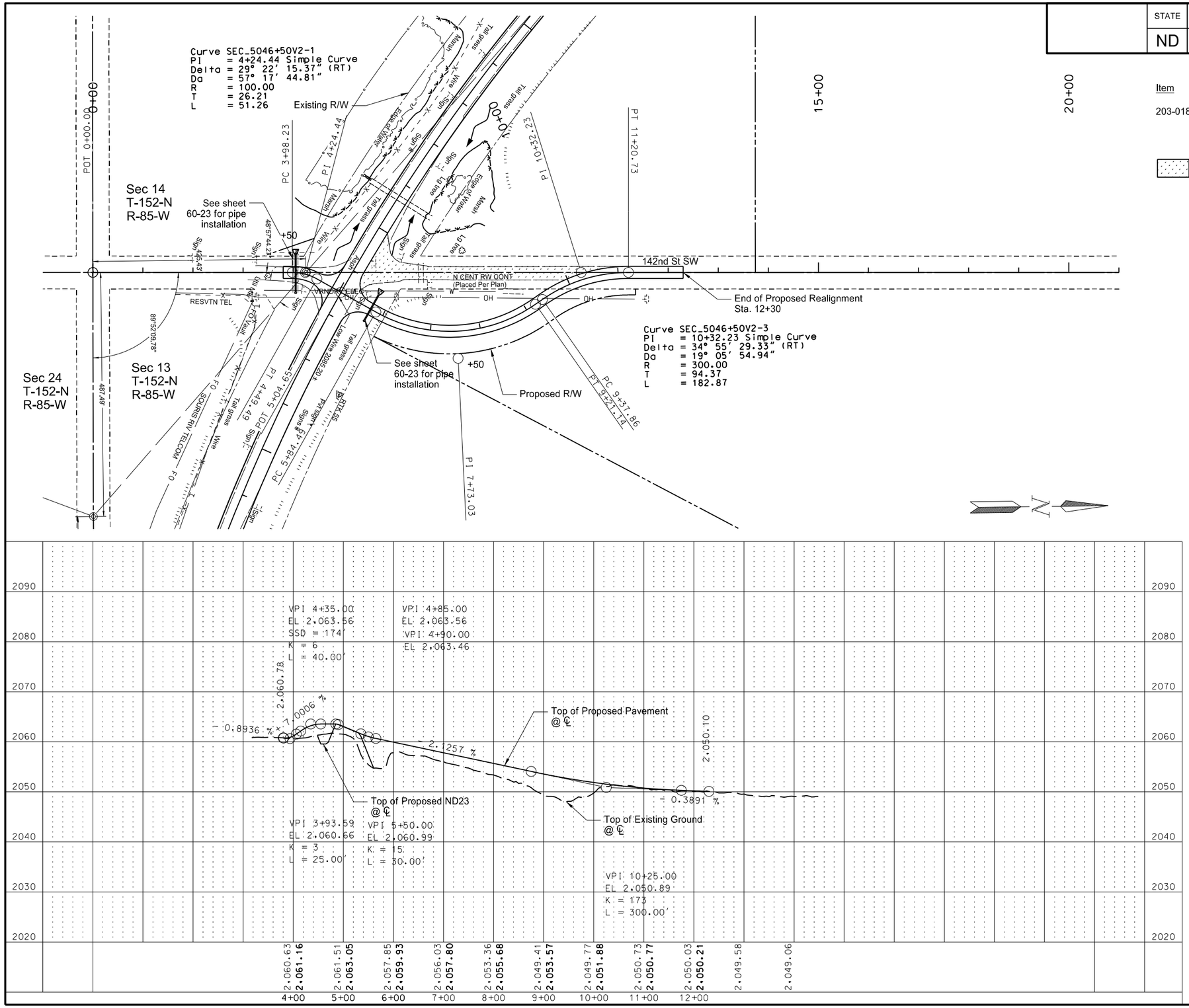

Item	Description	Quantity	Unit
203-0180	ROADWAY OBLITERATION Sta 5+25.09 to Sta 10+37.25	442	LF

Roadway Obliteration

This document was originally issued and sealed by Jeffrey T. Lansink Registration Number PE- 5244, on 11/3/15 and the original document is stored at the North Dakota Department of Transportation

Plan and Profile

ND 23 - ND 28 to County Rd 13