STATE	PROJECT NO.	PCN	SECTION NO.	SHEET NO.
ND	S-BRI-1-094(155)156	19482	1	1

JOB #2
NORTH DAKOTA
DEPARTMENT OF TRANSPORTATION

S-BRI-1-094(155)156

23 U.S.C. 409
NDDOT Reserves All Objections

GOVERNING SPECIFICATIONS:
2014 Standard Specifications adopted by the North Dakota Department of Transportation and the Supplemental Specifications effective on the date the project is advertised.

PROJECT NUMBER \ DESCRIPTION NET MILES GROSS MILES

Burleigh & Morton County
Grant Marsh Bridge ~ Missouri River
Bismarck - Mandan
Structural Steel Painting

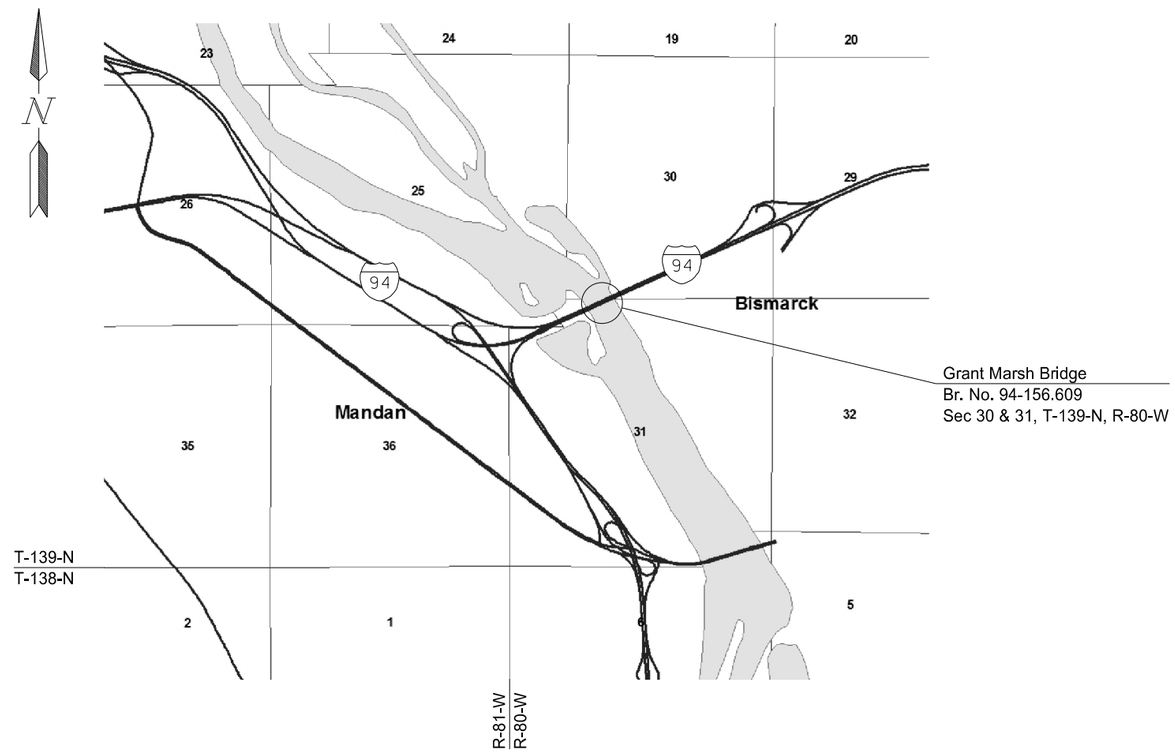

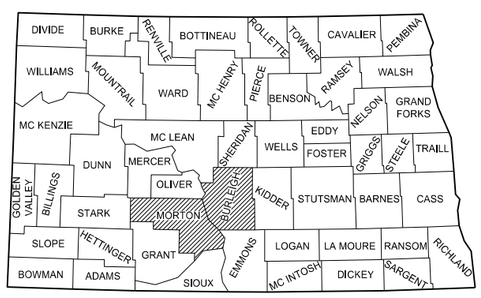

STATE COUNTY MAP

I hereby certify that the attached plans were prepared by me or under my direct supervision and that I am a duly registered professional engineer under the laws of the state of ND.

APPROVED DATE 10/28/15

Jon Ketterling
BRIDGE DIVISION

This document was originally issued and sealed by Jon Ketterling, Registration Number PE- 4684, on 10/28/15 and the original document is stored at the North Dakota Department of Transportation

TABLE OF CONTENTS

Section No.	Sheet No.	Description
1	1	Title Sheet
2	1	Table of Contents & List of Special Provisions/Standard Drawings
6	1	Notes
6	2	Environmental Commitments
8	1	Estimate of Quantities
100	1	Traffic Control Devices List
100	2-6	Work Zone Traffic Control
170	1-6	Bridge Details

LIST OF SPECIAL PROVISIONS (SP)

SP #	Description
SP 4(14)	Federal Migratory Bird Treaty Act
SP 29(14)	Bridge Paint: Lead Paint Removal, Containment, and New Paint

LIST OF STANDARD DRAWINGS

Standard No.	Description
D-101-1, 2, 3	NDDOT Abbreviations
D-101-10	NDDOT Utility Company and Organization Abbreviations
D-101-20, 21	Line Styles
D-101-30, 31, 32	Symbols
D-704-7	Breakaway Systems for Construction Zone Signs – Perforated Tube
D-704-8	Breakaway Systems for Construction Zone Signs – U-Channel Post
D-704-9	Construction Sign Details – Terminal and Guide Signs
D-704-10	Construction Sign Details – Regulatory Signs
D-704-11	Construction Sign Details – Warning Signs
D-704-12	Shoulder Closure Tapers
D-704-13	Barricade and Channelizing Device Details
D-704-14	Construction Sign Punching and Mounting Details
D-704-15	Road Closure Layouts
D-704-35	Sign Layout for One Lane Closure – Interstate System
D-704-50	Portable Sign Support Assembly

NOTES

704-P01 TRAFFIC CONTROL: The Work Zone Traffic Control Plan was developed to allow temporary one-lane closures on I-94 during off-peak hours only. Do not perform work that will restrict or interfere with traffic outside the off-peak hours listed below. Remove and/or cover traffic control devices required for the lane closure during peak hours.

The Engineer may modify the off-peak hours based on actual traffic conditions. The Engineer will apply a contract price reduction of $500 per hour for each hour or any portion of an hour for lane closures outside of the off-peak hours.

Off-peak hours are defined as the following:

Saturday 5:00 AM to Monday 6:00 AM
Monday 6:00 PM to Tuesday 6:00 AM
Tuesday 6:00 PM to Wednesday 6:00 AM
Wednesday 6:00 PM to Thursday 6:00 AM
Thursday 6:00 PM to Friday 6:00 AM

704-P02 TRAFFIC CONTROL: The one lane closure on River Road will only be allowed when workers are present. Return traffic to two lanes when workers are not present.

704-P03 TRAFFIC CONTROL DEVICES: The traffic control devices list has been developed using the following layouts on the Standard Drawing for traffic control.

D-704-7 and D-704-8: Breakaway Systems for Construction Zone Signs
D-704-9, D-704-10, D-704-11 and D-704-12: Construction Sign Details
D-704-13: Barricade Details and Channelizing Devices
D-704-14: Construction Sign Punching and Mounting Details
D-704-15: Layout Type A: To be used for one lane closures for River Road when placing and removing false work for the bridge painting.
D-704-35: Sign Layout for One-Lane Closure on I-94 for placing and removing false work for the bridge painting.
D-704-50: Portable Sign Support Assembly

The required traffic control signs and devices are included in the “Traffic Control Devices List” and will be measured and paid for at the Contract Unit price for each device. Additional devices required to accommodate the Contractor’s operation shall be the Contractor’s responsibility.

752-P01 TEMPORARY SAFETY FENCE: Install temporary safety fence where the potential for a hazardous situation exists for pedestrians or as directed by the Engineer.

This document was originally issued and sealed by Jeffrey R. Rensch, Registration Number PE-8211, on 08/07/15 and the original document is stored at the North Dakota Department of Transportation.

ENVIRONMENTAL COMMITMENTS

ENVIRONMENTAL COMMITMENTS (EC): The North Dakota Department of Transportation and the Federal Highway Administration have made environmental commitments to secure approval of this project. The environmental commitments are as follows:

EC-1: Unavoidable impacts to wetlands will be mitigated onsite, adjacent to the project, or at a NDDOT approved mitigation site or bank.

ACTION REQUIRED /TAKEN: All permanent and temporary impacts to natural/jurisdictional, natural/non-jurisdictional, artificial/jurisdictional, and artificial/non-jurisdictional wetlands, as well as deep water and other waters impacts must be indicated in the Summary Impact Table below.

Wetland Number	Cowardin Classification	Wetland Type	Wetland Size (acres)	Wetland Feature	USACE Jurisdictional Wetlands	Impacts to Wetlands	
						Temp.	Perm.
There are a number of adjacent wetlands within the project limits; however, no impacts are anticipated within the limits of construction.							
TOTALS:				0.00		0.00	0.00

EC- 2: Pollution control measures will be implemented to contain wastes generated during the paint removal process.

ACTION REQUIRED /TAKEN: Special Provision 29(14) outlines specific steps the contractor must take for removal, containment, storage and disposal of material and waste generated during the paint removal process, including lead based paint and primer. The Contractor will be responsible for submitting SFN 53479 (Lead-Based Paint Notification of Abatement and Demolition Clearance) to the ND Dept. of Health a minimum of 10 days prior to beginning work.

ESTIMATE OF QUANTITIES

STATE	PROJECT NO.	SECTION NO.	SHEET NO.
ND	S-BRI-1-094(155)156	8	1

SPEC	CODE	ITEM DESCRIPTION	UNIT	QUANTITY	TOTAL
103	0100	CONTRACT BOND	L SUM	1	1
630	0100	SAND BLASTING & PAINTING	L SUM	1	1
630	9000	CONTAINMENT SYSTEM	L SUM	1	1
702	0100	MOBILIZATION	L SUM	1	1
704	0100	FLAGGING	MHR	540	540
704	1000	TRAFFIC CONTROL SIGNS	UNIT	2,174	2,174
704	1052	TYPE III BARRICADE	EA	6	6
704	1060	DELINEATOR DRUMS	EA	88	88
704	1067	TUBULAR MARKERS	EA	54	54
704	1087	SEQUENCING ARROW PANEL-TYPE C	EA	2	2
752	0911	TEMPORARY SAFETY FENCE	LF	400	400

STATE	PROJECT NO.	SECTION NO.	SHEET NO.
ND	S-BRI-1-094(155)156	100	1

SIGN NUMBER	SIGN SIZE	DESCRIPTION	AMOUNT REQUIRED	UNITS PER AMOUNT	UNITS SUB TOTAL
D3-36	36"x6"	STREET NAME SIGN (Sign and installation only)		6	
G20-1a-60	60"x24"	ROAD WORK NEXT __ MILES		34	
G20-1b-60	60"x24"	WORK IN PROGRESS/ NO WORK IN PROGRESS (Sign and installation only)		26	
G20-2a-48	**48"x24"**	**END ROAD WORK**	**9**	**19**	**171**
G20-4-36	36"x18"	PILOT CAR FOLLOW ME		18	
G20-10-108	108"x48"	CONTRACTOR SIGN		64	
G20-50a-72	72"x36"	ROAD WORK NEXT __ MILES RT & LT ARROWS		37	
G20-52a-72	72"x24"	ROAD WORK NEXT __ MILES RT or LT ARROW		30	
G20-55-96	**96"x48"**	**SPEED LIMIT ENFORCED - MINIMUM FEE $80 WHEN WORKERS PRESENT**	**5**	**59**	**295**
M1-1-36	36"x36"	INTERSTATE ROUTE MARKER (Post and installation only)		10	
M1-4-24	24"x24"	U.S. ROUTE MARKER (Post and installation only)		10	
M1-5-24	24"x24"	STATE ROUTE MARKER (Post and installation only)		10	
M3-1-24	24"x12"	NORTH (Mounted on route marker post)		7	
M3-2-24	24"x12"	EAST (Mounted on route marker post)		7	
M3-3-24	24"x12"	SOUTH (Mounted on route marker post)		7	
M3-4-24	24"x12"	WEST (Mounted on route marker post)		7	
M4-8-24	24"x12"	DETOUR (Mounted on route marker post)		7	
M4-9-30	30"x24"	DETOUR ARROW RIGHT or LEFT/AHD AND RT or LT		15	
M4-10-48	48"x18"	DETOUR ARROW RIGHT or LEFT		23	
M5-1-21	21"x15"	ARROW AHD AND RT or LT(Mounted on route marker post)		7	
M5-2-21	21"x15"	ARROW AHD UP & RT or LT (Mounted on route marker post)		7	
M6-1-21	21"x15"	ARROW RT or LT (Mounted on route marker post)		7	
M6-2-21	21"x15"	ARROW UP & RT or LT (Mounted on route marker post)		7	
M6-3-21	21"x15"	ARROW AHD (Mounted on route marker post)		7	
R1-1-48	48"x48"	STOP		32	
R1-1a-18	**18"x18"**	**STOP and SLOW PADDLE Back to Back**	**4**	**5**	**20**
R1-2-60	**60"x60"**	**YIELD**	**1**	**29**	**29**
R2-1-48	**48"x60"**	**SPEED LIMIT __**	**9**	**39**	**351**
R2-1a-24	**24"x18"**	**MINIMUM FEE $80 (Mounted on Speed Limit post)**	**5**	**10**	**50**
R3-7-48	48"x48"	LEFT or RIGHT LANE MUST TURN LEFT or RIGHT		35	
R4-1-48	**48"x60"**	**DO NOT PASS**	**4**	**39**	**156**
R4-7-48	48"x60"	KEEP RIGHT SYMBOL		39	
R5-1-48	48"x48"	DO NOT ENTER		35	
R6-1-36	36"x12"	ONE WAY RIGHT or LEFT		13	
R7-1-12	12"x18"	NO PARKING		11	
R10-6-24	24"x36"	STOP HERE ON RED		16	
R11-2-48	48"x30"	ROAD CLOSED		28	
R11-2a-48	48"x30"	STREET CLOSED		28	
R11-3a-60	60"x30"	ROAD CLOSED __ MILES AHEAD LOCAL TRAFFIC ONLY		31	
R11-3c-60	60"x30"	STREET CLOSED __ MILES AHEAD LOCAL TRAFFIC ONLY		31	
R11-4a-60	60"x30"	STREET CLOSED TO THRU TRAFFIC		31	
W1-3-48	48"x48"	RIGHT or LEFT SHARP REVERSE CURVE ARROW		35	
W1-4-48	48"x48"	RIGHT or LEFT REVERSE CURVE ARROW		35	
W1-4b-48	48"x48"	DOUBLE RIGHT or LEFT REVERSE CURVE ARROW		35	
W1-6-48	**48"x24"**	**LARGE ARROW**	**2**	**26**	**52**
W3-1-48	48"x48"	STOP AHEAD SYMBOL		35	
W3-2-48	**48"x48"**	**YIELD AHEAD**	**1**	**35**	**35**
W3-3-48	48"x48"	SIGNAL AHEAD SYMBOL		35	
W3-4-48	**48"x48"**	**BE PREPARED TO STOP**	**2**	**35**	**70**
W3-5-48	**48"x48"**	**SPEED REDUCTION AHEAD**	**6**	**35**	**210**
W4-2-48	**48"x48"**	**RIGHT or LEFT LANE TRANSITION SYMBOL**	**4**	**35**	**140**
W5-1-48	48"x48"	ROAD NARROWS		35	
W5-8-48	48"x48"	THRU TRAFFIC RIGHT LANE		35	
W5-9-48	48"x48"	ROAD WORK TRAFFIC ONLY DOWN & LT or RT ARROW		35	
W6-3-48	48"x48"	TWO WAY TRAFFIC SYMBOL		35	
W8-1-48	48"x48"	BUMP		35	
W8-3-48	48"x48"	PAVEMENT ENDS		35	
W8-7-48	48"x48"	LOOSE GRAVEL		35	
W8-9a-48	48"x48"	SHOULDER DROP-OFF		35	
W8-11-48	48"x48"	UNEVEN LANES		35	
W8-12-48	48"x48"	NO CENTER STRIPE		35	
W8-53-48	48"x48"	TRUCKS ENTERING HIGHWAY		35	
W8-54-48	48"x48"	TRUCKS ENTERING AHEAD or __ FT.		35	
W8-55-48	48"x48"	TRUCKS CROSSING AHEAD or __ FT.		35	
W8-56-48	48"x48"	TRUCKS EXITING HIGHWAY		35	
W9-3a-48	48"x48"	CENTER LANE CLOSED SYMBOL		35	
W12-2-48	48"x48"	LOW CLEARANCE SYMBOL		35	
W13-1-24	24"x24"	__ MPH ADVISORY SPEED PLATE (Mounted on warning sign post)		11	
W13-4-48	48"x60"	RAMP ARROW		39	
W14-3-48	48"x36"	NO PASSING ZONE		23	
W20-1-48	**48"x48"**	**ROAD WORK AHEAD or _FT or _ MILE**	**9**	**35**	**315**
W20-2-48	48"x48"	DETOUR AHEAD or __ FT		35	
W20-3-48	48"x48"	ROAD or STREET CLOSED AHEAD or __ FT.		35	
W20-4-48	48"x48"	ONE LANE ROAD AHEAD or __ FT.		35	
W20-5-48	**48"x48"**	**RIGHT or LEFT LANE CLOSED AHEAD or __ FT.**	**4**	**35**	**140**
W20-7a-48	**48"x48"**	**FLAGGING SYMBOL**	**4**	**35**	**140**
W20-7k-24	24"x18"	__ FEET (Mounted on warning sign post)		10	
W20-8-48	48"x48"	STREET CLOSED		35	
W20-51-48	48"x48"	EQUIPMENT WORKING		35	
W20-52-54	54"x12"	NEXT __ MILES (Mounted on warning sign post)		12	
W21-1a-48	48"x48"	WORKERS SYMBOL		35	
W21-2-48	48"x48"	FRESH OIL		35	

SIGN NUMBER	SIGN SIZE	DESCRIPTION	AMOUNT REQUIRED	UNITS PER AMOUNT	UNITS SUB TOTAL
W21-3-48	48"x48"	ROAD MACHINERY AHEAD or __ FT		35	
W21-5-48	48"x48"	SHOULDER WORK		35	
W21-5a-48	48"x48"	RIGHT or LEFT SHOULDER CLOSED		35	
W21-5b-48	48"x48"	RIGHT or LEFT SHOULDER CLOSED AHEAD or __ FT.		35	
W21-6a-48	48"x48"	SURVEY CREW AHEAD		35	
W21-50-48	48"x48"	BRIDGE PAINTING AHEAD or __ FT.		35	
W21-51-48	48"x48"	MATERIAL ON ROADWAY		35	
W22-8-48	48"x48"	FRESH OIL LOOSE ROCK		35	
	24"x24"	TAKE TURNS (6" D letters) (Mounted on stop sign post)		11	

SPECIAL SIGNS

SPEC & CODE

704-1000	**TRAFFIC CONTROL SIGNS**	**TOTAL UNITS**	**2174**

SPEC & CODE	DESCRIPTION	UNIT	QUANTITY
704-0100	**FLAGGING**	**MHR**	**540**
704-1035	ATTENUATION DEVICE-TYPE B-25	EACH	
704-1039	ATTENUATION DEVICE-TYPE B-45	EACH	
704-1041	ATTENUATION DEVICE-TYPE B-55	EACH	
704-1043	ATTENUATION DEVICE-TYPE B-65	EACH	
704-1044	ATTENUATION DEVICE-TYPE B-70	EACH	
704-1050	TYPE I BARRICADES	EACH	
704-1051	TYPE II BARRICADES	EACH	
704-1052	**TYPE III BARRICADES**	**EACH**	**6**
704-1060	**DELINEATOR DRUMS**	**EACH**	**88**
704-1065	TRAFFIC CONES	EACH	
704-1067	**TUBULAR MARKERS**	**EACH**	**54**
704-1070	DELINEATOR	EACH	
704-1072	FLEXIBLE DELINEATORS	EACH	
704-1081	VERTICAL PANELS - BACK TO BACK	EACH	
704-1085	SEQUENCING ARROW PANEL - TYPE A	EACH	
704-1086	SEQUENCING ARROW PANEL - TYPE B	EACH	
704-1087	**SEQUENCING ARROW PANEL - TYPE C**	**EACH**	**2**
704-1088	SEQUENCING ARROW PANEL - TYPE C - CROSSOVER	EACH	
704-1095	TYPE B FLASHERS	EACH	
704-1185	PILOT CAR	HR	
704-1500	OBLITERATION OF PAVEMENT MARKING	SF	
704-3501	PORTABLE PRECAST CONCRETE MED BARRIER	LF	
704-3510	PRECAST CONCRETE MED BARRIER - STATE FURNISHED	EACH	
762-0200	RAISED PAVEMENT MARKERS	EACH	
762-0420	SHORT TERM 4IN LINE - TYPE R	LF	
762-0430	SHORT TERM 4IN LINE - TYPE NR	LF	

NOTE:
If additional signs are required, units will be calculated using the formula from Section III-19.06 of the Design Manual.
http://www.dot.nd.gov/

This document was originally issued and sealed by Jeffrey R. Rensch, Registration Number PE-8211, on 8/7/15 and the original document is stored at the North Dakota Department of Transportation.

Traffic Control Devices List

STATE	PROJECT NO.	SECTION NO.	SHEET NO.
ND	S-BRI-1-094(155)156	100	2

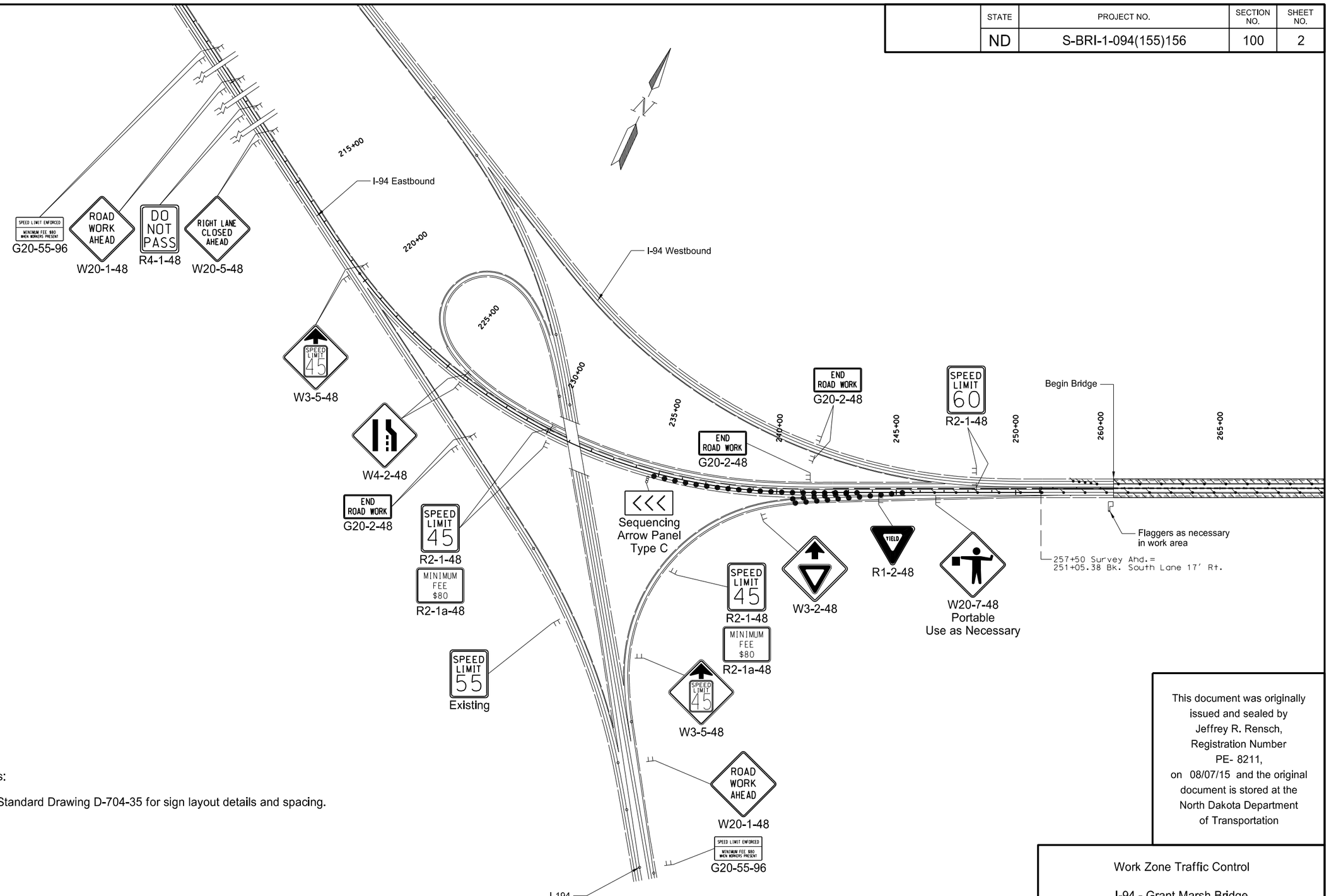

Notes:

See Standard Drawing D-704-35 for sign layout details and spacing.

This document was originally issued and sealed by Jeffrey R. Rensch, Registration Number PE- 8211, on 08/07/15 and the original document is stored at the North Dakota Department of Transportation

Work Zone Traffic Control

I-94 - Grant Marsh Bridge

West Sign Layout

STATE	PROJECT NO.	SECTION NO.	SHEET NO.
ND	S-BRI-1-094(155)156	100	3

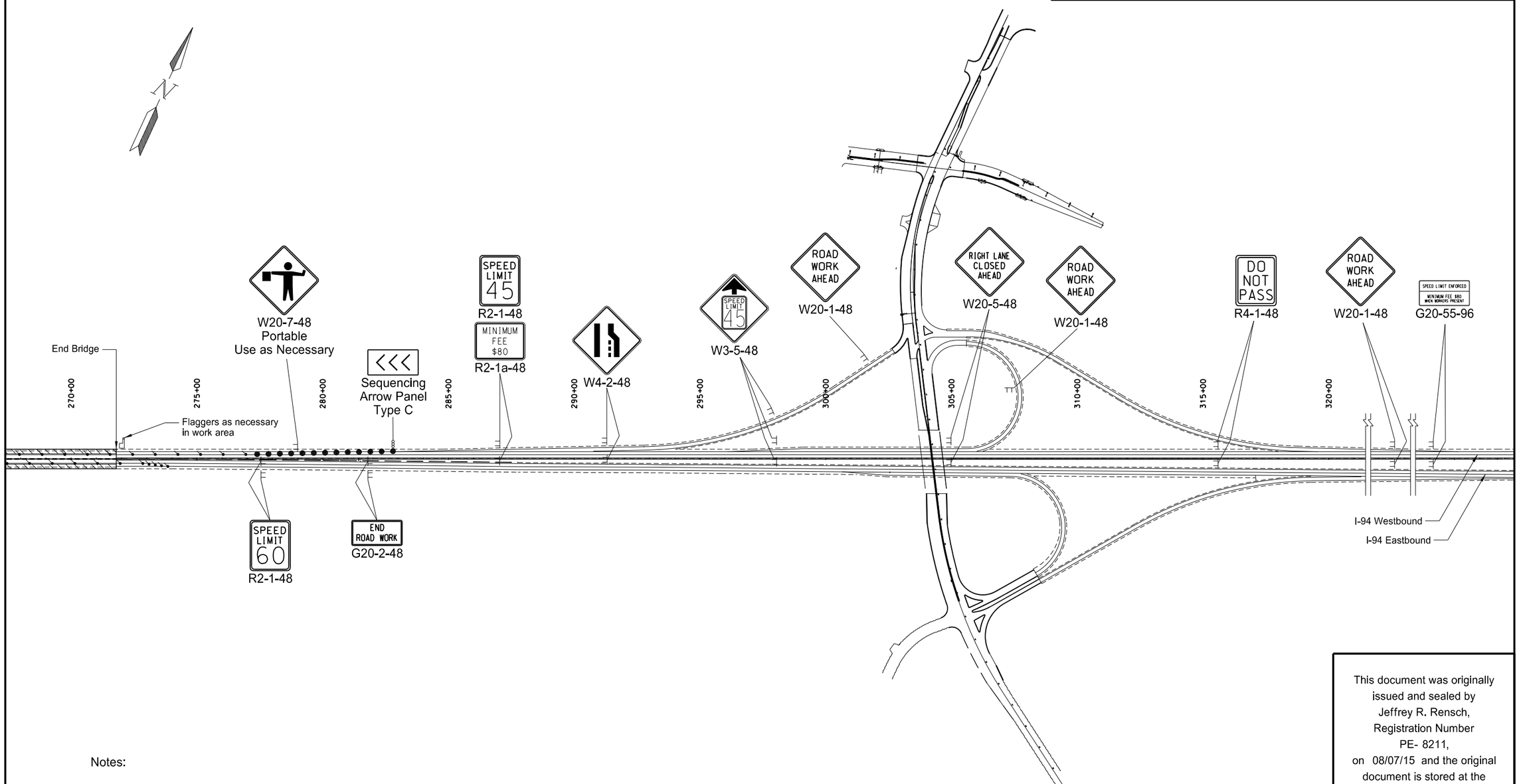

Notes:

See Standard Drawing D-704-35 for sign layout details and spacing.

This document was originally issued and sealed by Jeffrey R. Rensch, Registration Number PE- 8211, on 08/07/15 and the original document is stored at the North Dakota Department of Transportation

Work Zone Traffic Control

I-94 - Grant Marsh Bridge

East Sign Layout

STATE	PROJECT NO.	SECTION NO.	SHEET NO.
ND	S-BRI-1-094(155)156	100	4

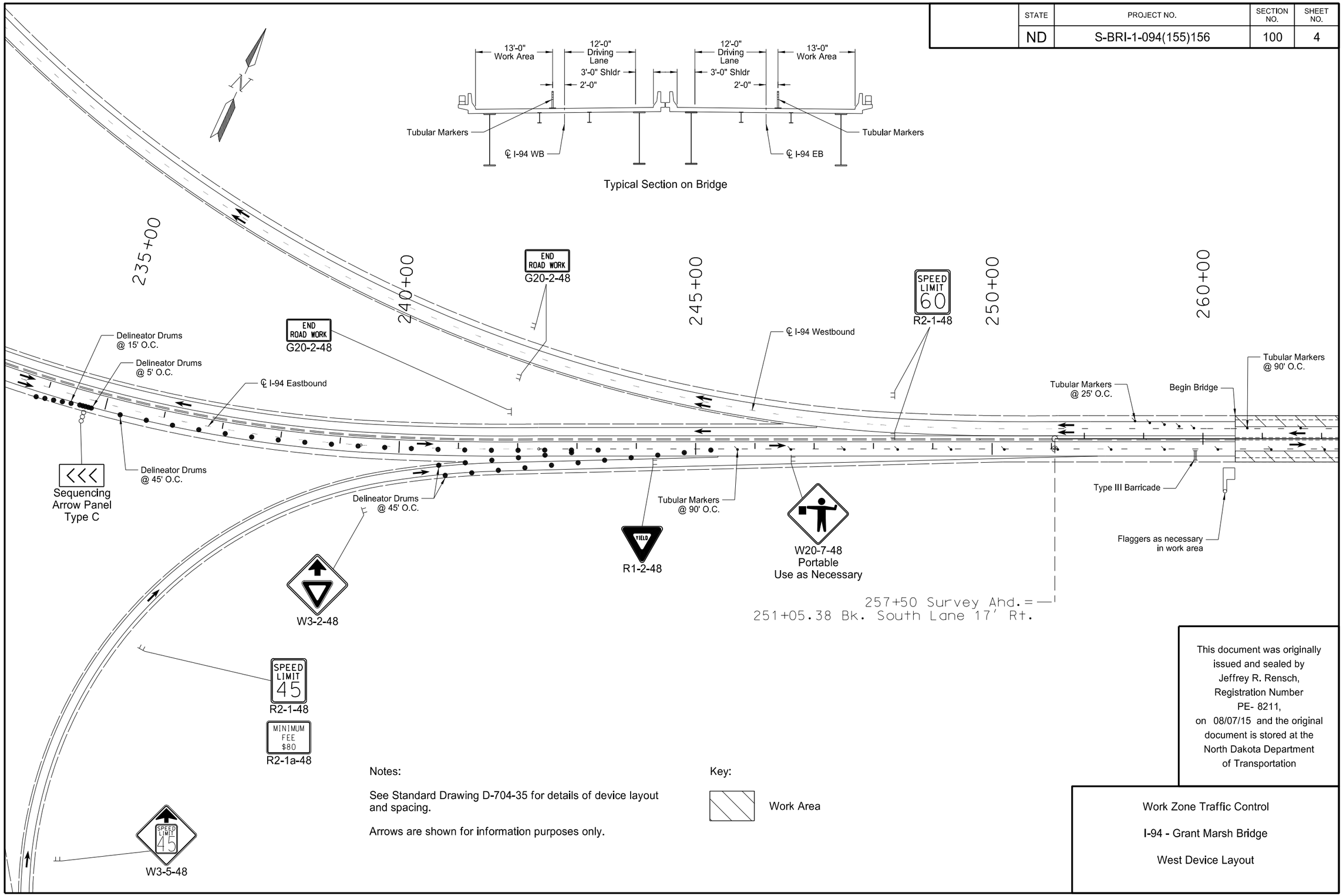

Notes:

See Standard Drawing D-704-35 for details of device layout and spacing.

Arrows are shown for information purposes only.

Key:

Work Area

This document was originally issued and sealed by Jeffrey R. Rensch, Registration Number PE- 8211, on 08/07/15 and the original document is stored at the North Dakota Department of Transportation

Work Zone Traffic Control

I-94 - Grant Marsh Bridge

West Device Layout

STATE	PROJECT NO.	SECTION NO.	SHEET NO.
ND	S-BRI-1-094(155)156	100	5

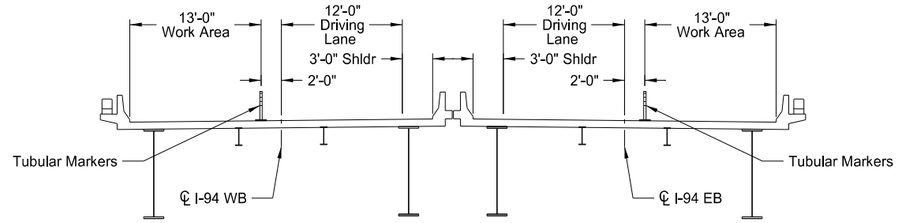

Typical Section on Bridge

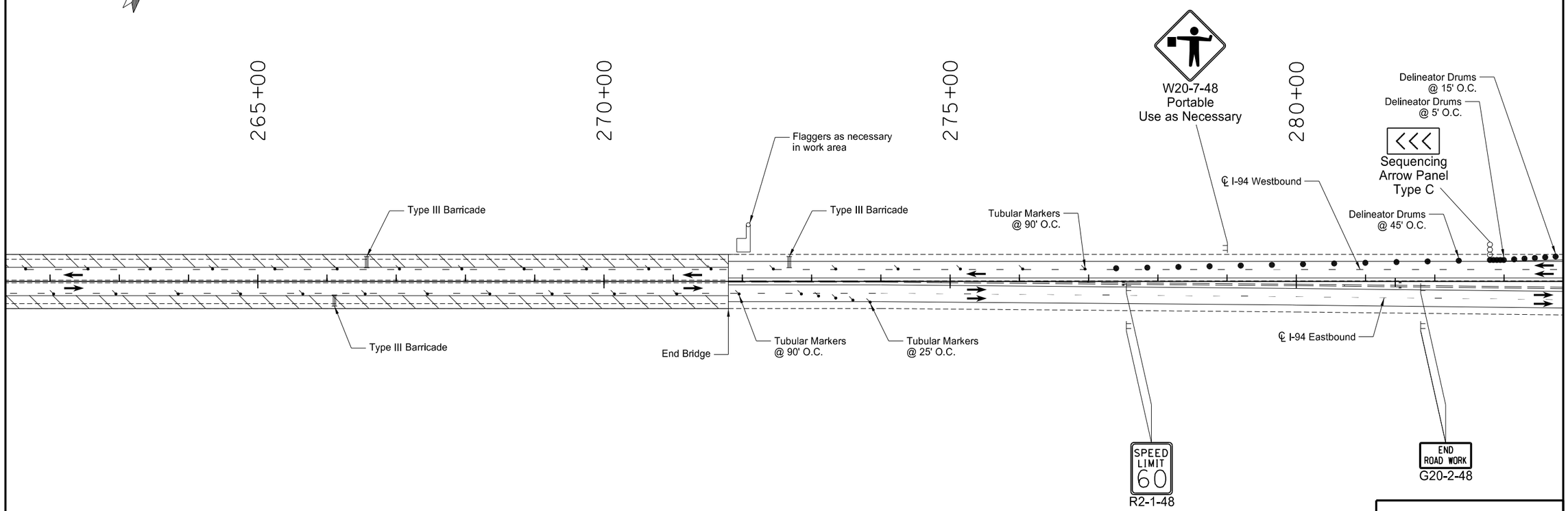

This document was originally issued and sealed by Jeffrey R. Rensch, Registration Number PE- 8211, on 08/07/15 and the original document is stored at the North Dakota Department of Transportation

Notes:

See Standard Drawing D-704-35 for details of device layout and spacing.

Arrows are shown for information purposes only.

Key:

Work Area

Work Zone Traffic Control

I-94 - Grant Marsh Bridge

East Device Layout

STATE	PROJECT NO.	SECTION NO.	SHEET NO.
ND	S-BRI-1-094(155)156	100	6

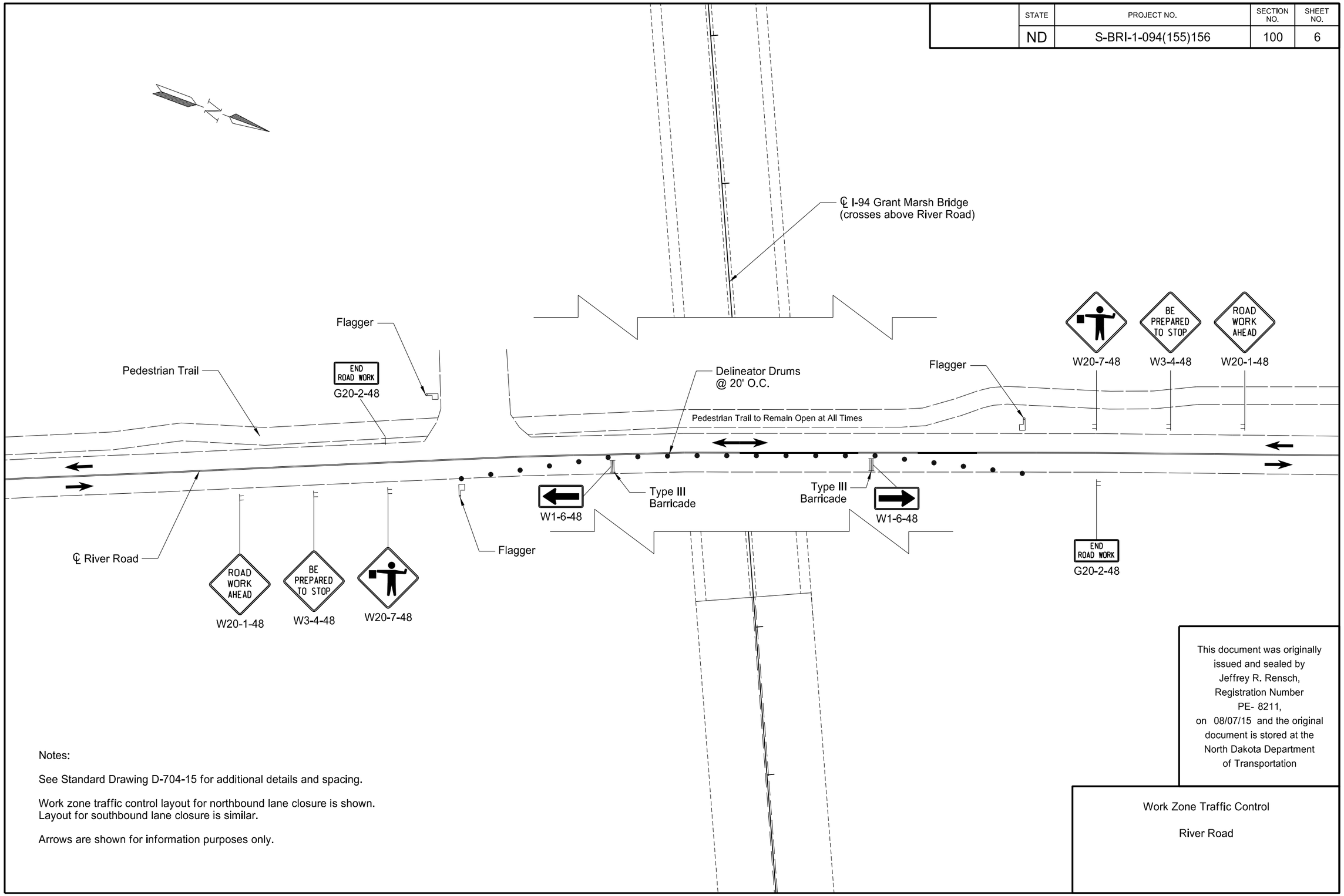

This document was originally issued and sealed by Jeffrey R. Rensch, Registration Number PE- 8211, on 08/07/15 and the original document is stored at the North Dakota Department of Transportation

Notes:

See Standard Drawing D-704-15 for additional details and spacing.

Work zone traffic control layout for northbound lane closure is shown.
Layout for southbound lane closure is similar.

Arrows are shown for information purposes only.

Work Zone Traffic Control

River Road

23 U.S.C. 409
NDDOT Reserves All Objections

STATE	PROJECT NUMBER	SECTION NO.	SHEET NO.
ND	S-BRI-1-094(155)156	170	1

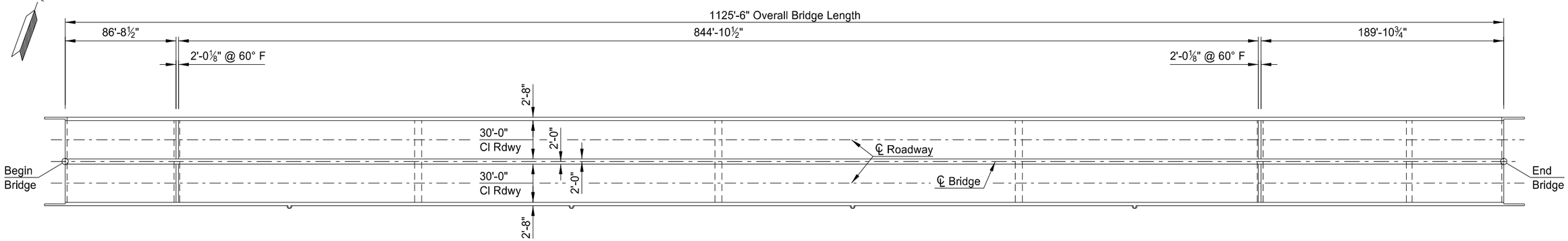

PLAN

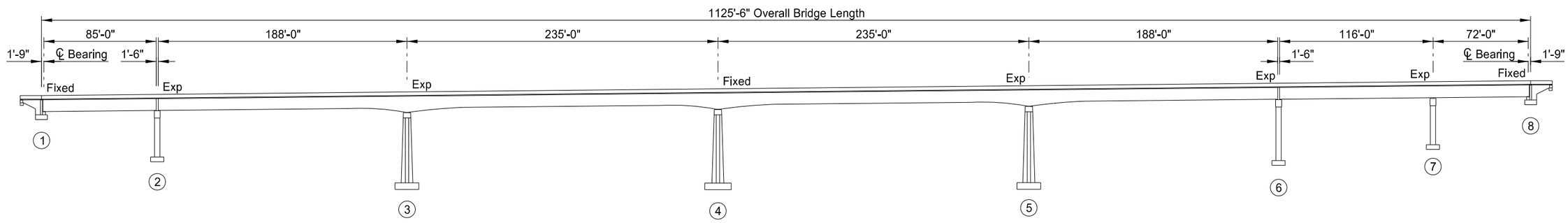

ELEVATION

SPECIAL PROVISIONS	
SP 4(14)	MIGRATORY BIRD TREATY ACT
SP 29(14)	BRIDGE PAINT: LEAD PAINT REMOVAL

This document was originally issued and sealed by Brian W. Raschke, Registration Number PE 4361, on 08/11/15 and the original document is stored at the North Dakota Department of Transportation

NORTH DAKOTA
DEPARTMENT OF TRANSPORTATION
GRANT MARSH BRIDGE
BISMARCK - MANDAN

BRIDGE LAYOUT

PROJECT: S-BRI-1-094(155)156

BURLEIGH & MORTON COUNTY

08/12/15 — DATE
Terrence R. Udland — BRIDGE ENGINEER

BRIDGE BID ITEMS

SPEC	CODE	ITEM DESCRIPTION	UNIT	QUANTITY
630	0100	SAND BLASTING & PAINTING	L SUM	1
630	9000	CONTAINMENT SYSTEM	L SUM	1

23 U.S.C. 409
NDDOT Reserves All Objections

STATE	PROJECT NUMBER	SECTION NO.	SHEET NO.
ND	S-BRI-1-094(155)156	170	2

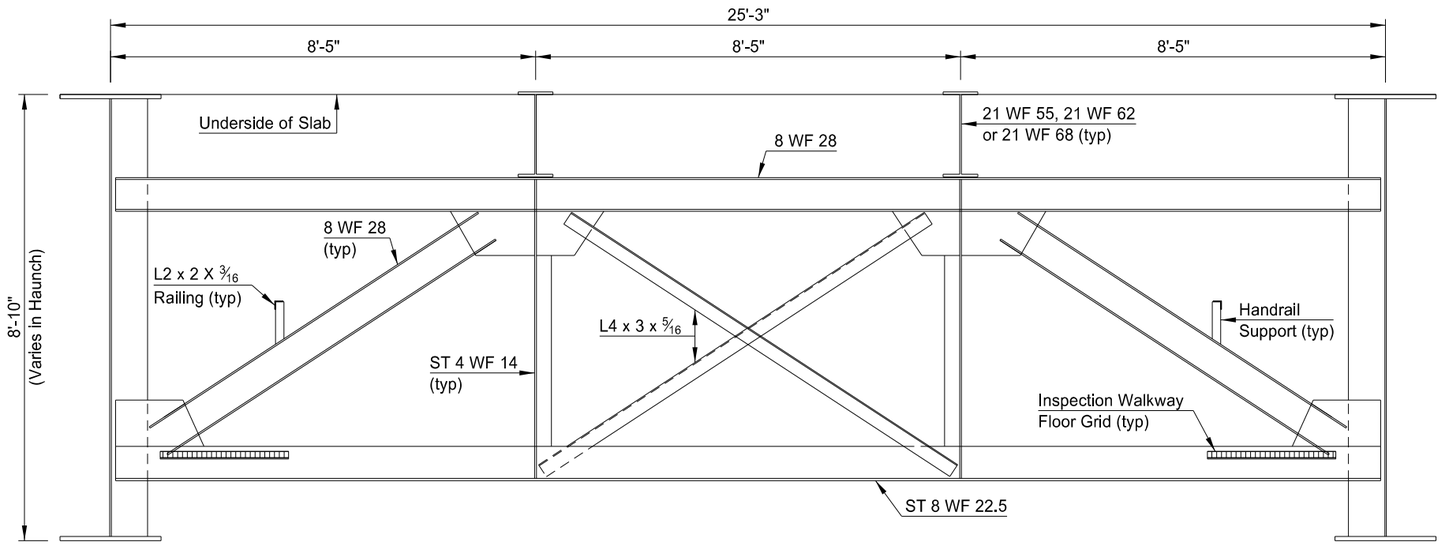

(SHOWING SECTION BETWEEN SUPPORTS,
AT ABUTMENTS 1 & 8 AND PIERS 2, 6 & 7)

FLOOR TRUSS ELEVATION

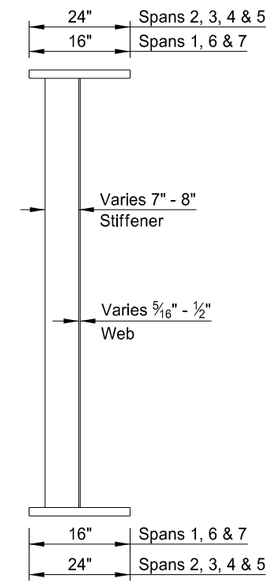

TYPICAL GIRDER SECTION

NOTES:

100 SCOPE OF WORK: This project consists of sand blasting and painting all exposed structural steel.

630 SAND BLASTING AND PAINTING: Sand blast and paint all exposed structural steel including the inspection walkway floor grids. Use blue paint for the finish coat, color number 25488 meeting Federal Standard 595B.

Plan sheets 94-156.609-2 thru 94-156.609-6 show the approximate surface area of exposed structural steel to be painted. There is approximately 200,000 square feet of exposed structural steel to be painted.

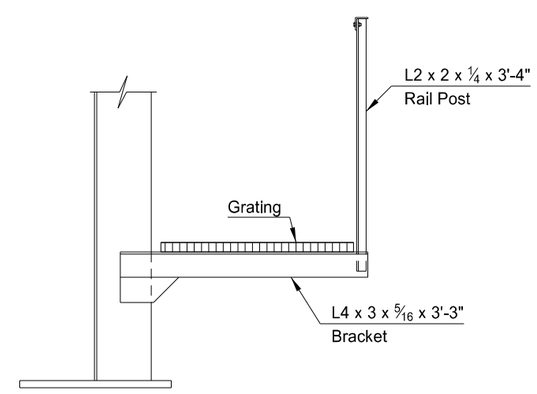

(SHOWING SECTION BETWEEN FLOOR TRUSSES)

INSPECTION WALKWAY BRACKET DETAIL

This document was originally issued and sealed by Brian W. Raschke, Registration Number PE 4361, on 08/11/15 and the original document is stored at the North Dakota Department of Transportation

GRANT MARSH BRIDGE
BISMARCK - MANDAN

STRUCTURAL STEEL
PAINTING DETAILS

23 U.S.C. 409
NDDOT Reserves All Objections

STATE	PROJECT NUMBER	SECTION NO.	SHEET NO.
ND	S-BRI-1-094(155)156	170	3

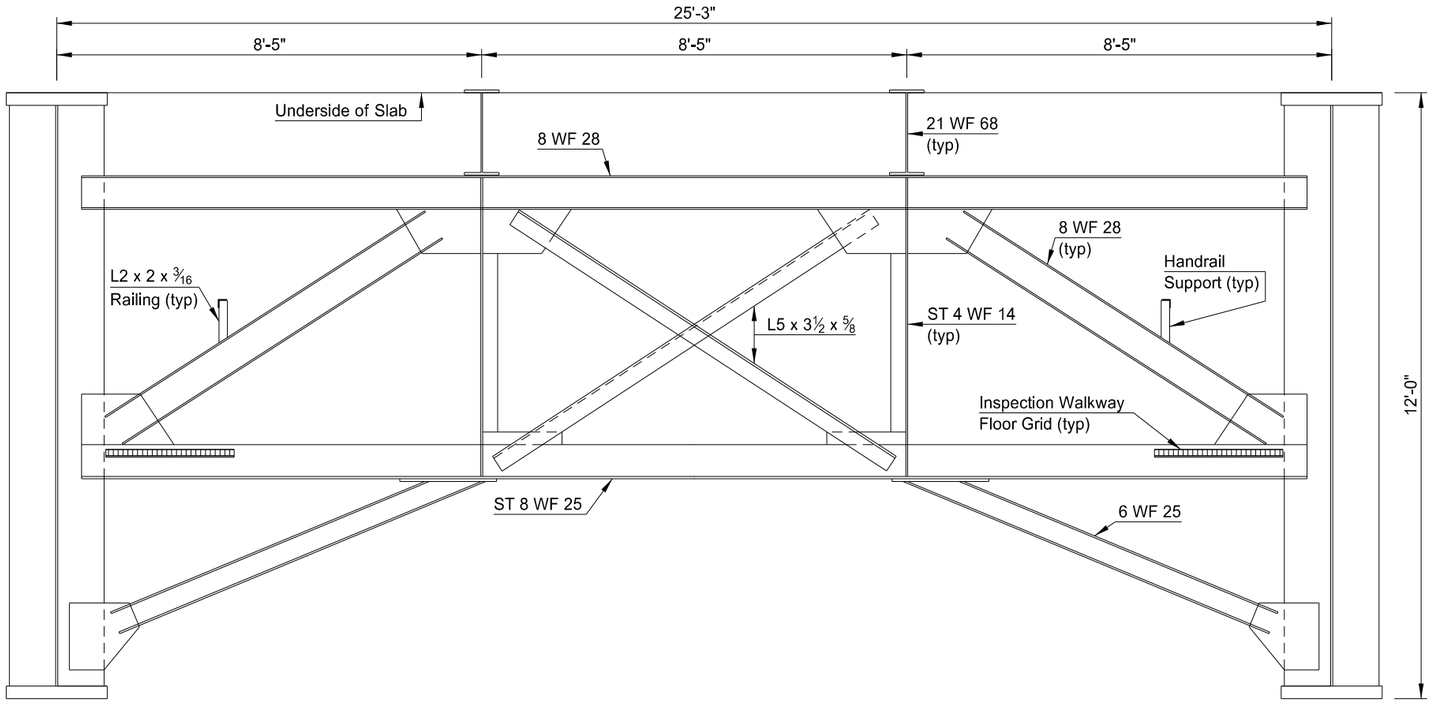

(SHOWING SECTION AT PIERS 3, 4 & 5)

FLOOR TRUSS ELEVATION

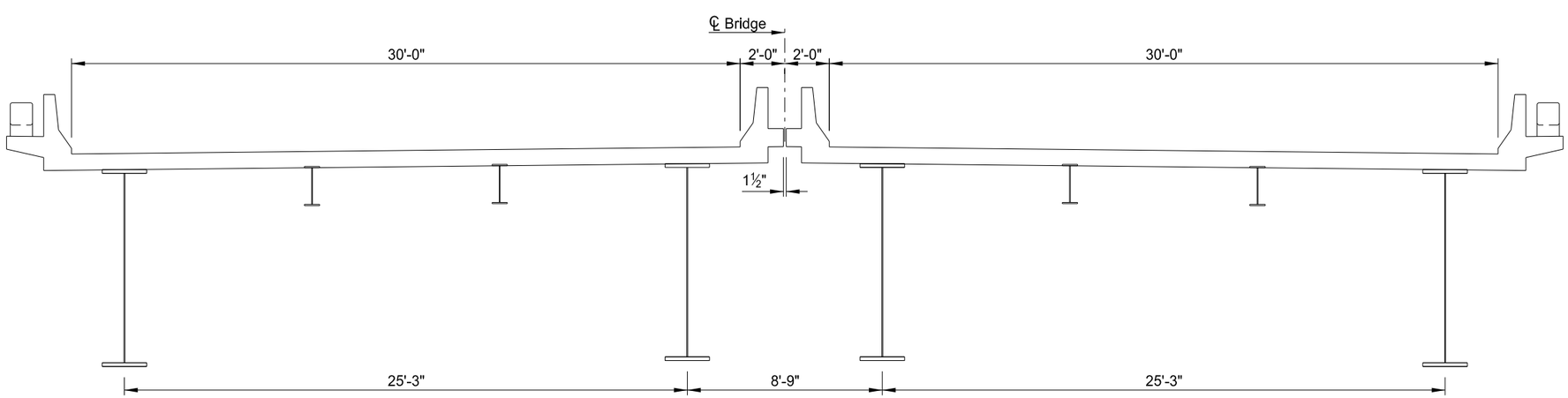

SUPERSTRUCTURE SECTION

This document was originally issued and sealed by Brian W. Raschke, Registration Number PE 4361, on 08/11/15 and the original document is stored at the North Dakota Department of Transportation

GRANT MARSH BRIDGE
BISMARCK - MANDAN

STRUCTURAL STEEL
PAINTING DETAILS

23 U.S.C. 409
NDDOT Reserves All Objections

STATE	PROJECT NUMBER	SECTION NO.	SHEET NO.
ND	S-BRI-1-094(155)156	170	4

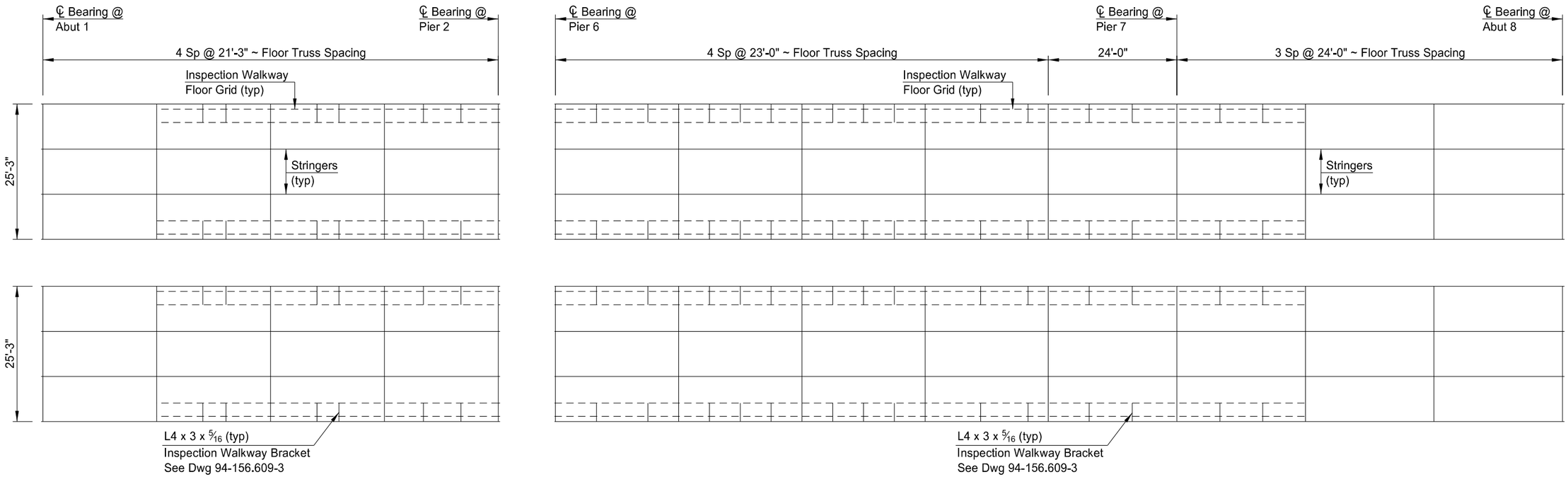

FRAMING PLAN

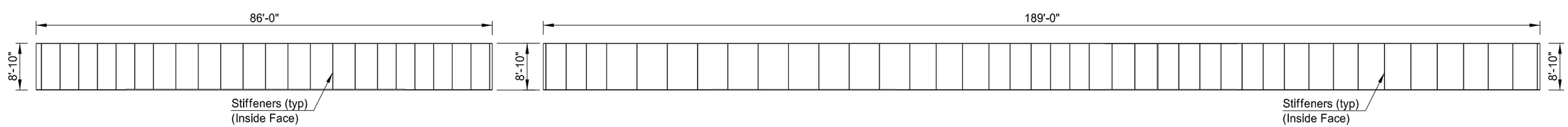

GIRDER ELEVATION

This document was originally issued and sealed by Brian W. Raschke, Registration Number PE 4361, on 08/11/15 and the original document is stored at the North Dakota Department of Transportation

GRANT MARSH BRIDGE
BISMARCK - MANDAN

SPANS 1, 6 & 7

STRUCTURAL STEEL PAINTING DETAILS

23 U.S.C. 409
NDDOT Reserves All Objections

STATE	PROJECT NUMBER	SECTION NO.	SHEET NO.
ND	S-BRI-1-094(155)156	170	5

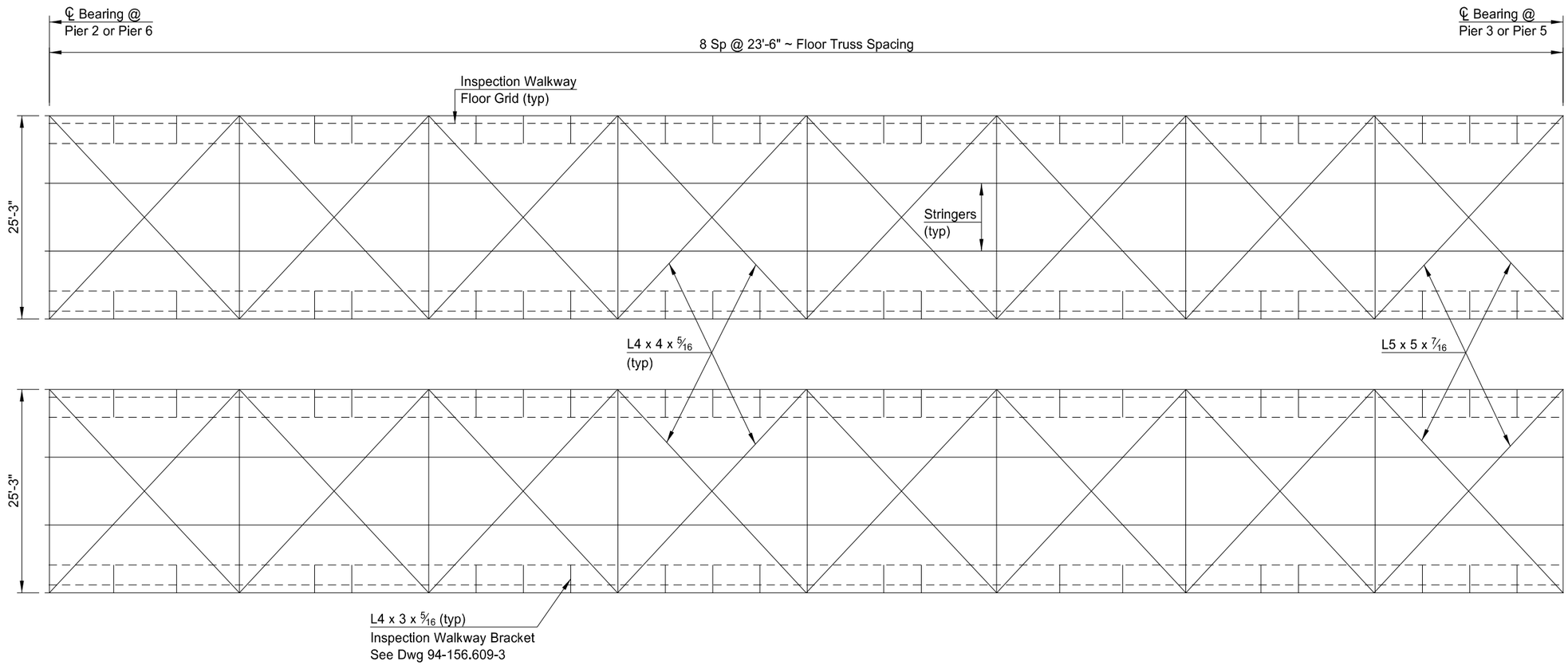

FRAMING PLAN

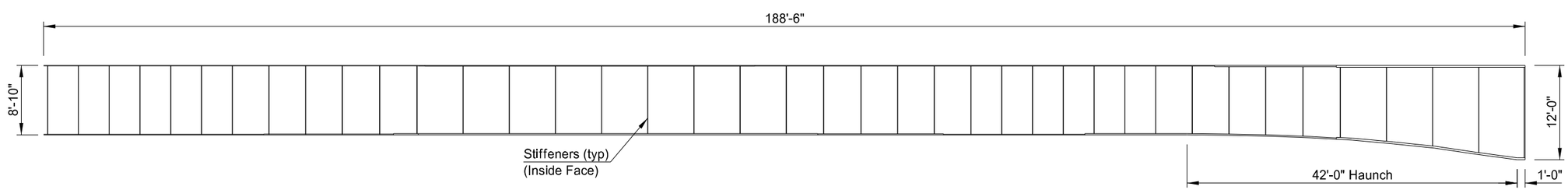

GIRDER ELEVATION

This document was originally issued and sealed by Brian W. Raschke, Registration Number PE 4361, on 08/11/15 and the original document is stored at the North Dakota Department of Transportation

GRANT MARSH BRIDGE
BISMARCK - MANDAN

SPANS 2 & 5

STRUCTURAL STEEL
PAINTING DETAILS

23 U.S.C. 409
NDDOT Reserves All Objections

STATE	PROJECT NUMBER	SECTION NO.	SHEET NO.
ND	S-BRI-1-094(155)156	170	6

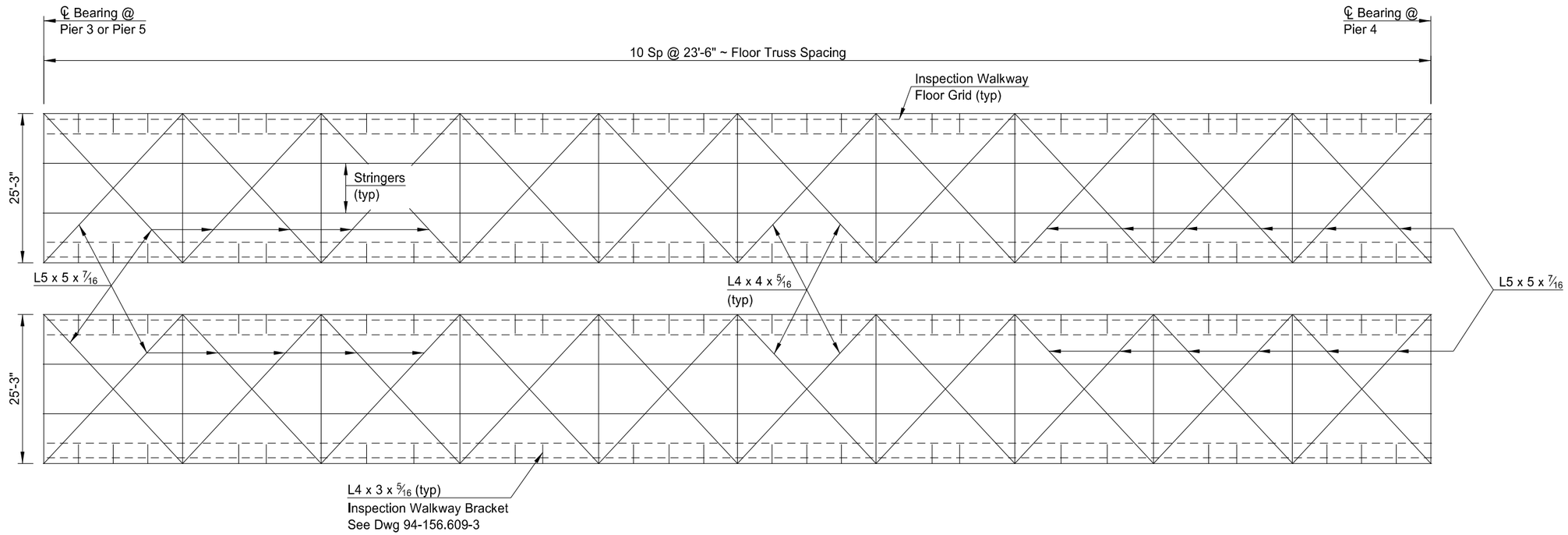

FRAMING PLAN

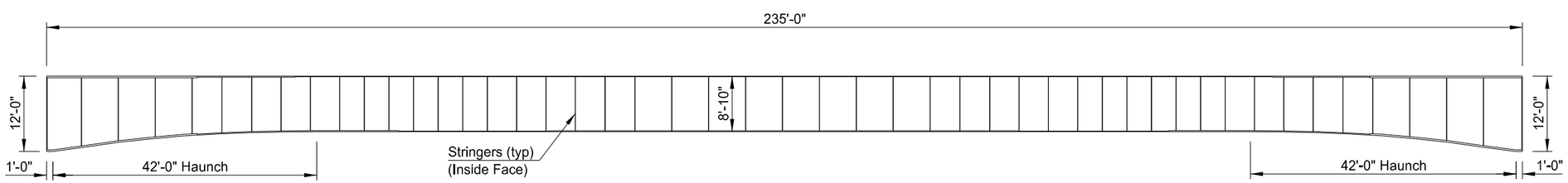

GIRDER ELEVATION

This document was originally issued and sealed by Brian W. Raschke, Registration Number PE 4361, on 08/11/15 and the original document is stored at the North Dakota Department of Transportation

GRANT MARSH BRIDGE
BISMARCK - MANDAN

SPANS 3 & 4

STRUCTURAL STEEL
PAINTING DETAILS

NDDOT ABBREVIATIONS

D-101-1

?	This is a special text character used in the labeling of existing features. It indicates a feature that has an unknown characteristic, potentially based on: lack of description, location accuracy or purpose.
Abn	abandoned
Abut	abutment
Ac	acres
Adj	adjusted
Aggr	aggregate
Ahd	ahead
ARV	air release valve
Align	alignment
Al	alley
Alt	alternate
Alum	aluminum
ADA	Americans with Disabilities Act
A	ampere
&	and
Appr	approach
Approx	approximate
ACP	asbestos cement pipe
Asph	asphalt
AC	asphalt cement
Assmd	assumed
@	at
Atten	attenuation
ATR	automatic traffic recorder
Ave	Avenue
Avg	average
ADT	average daily traffic
Az	azimuth
Bk	back
BF	back face
Bs	backsight
Balc	balcony
B Wire	barbed wire
Barr	barricade
Btry	battery
Brg	bearing
BI	beehive inlet
Beg	begin
BM	bench mark
Bkwy	bikeway
Bit	bituminous
Blk	block
Bd Ft	board feet
BH	bore hole
BS	both sides
Bot	bottom
Blvd	Boulevard
Bndry	boundary
BC	brass cap
Brkwy	breakaway
Br	bridge
Bldg	building
BV	butterfly valve
Byp	bypass
C Gdrl	cable guardrail
Calc	calculate
Cd	candela
CIP	cast iron pipe
CB	catch basin
CRS	cationic rapid setting
C Gd	cattle guard
C To C	center to center
CI or ℄	centerline
Cm	centimeter
Ch	chain
Chnlk	chain-link
Ch Blk	channel block
Ch Ch	channel change
Chk	check
Chsld	chiseled
Cir	circle
Cl	class
Cl	clay
Cl F	clay fill
Cl Hvy	clay heavy
Cl Lm	clay loam
Clnt	clean-out
Clr	clear
Cl&gr	clearing & grubbing
Co S	coal slack
Comb.	combination
Coml	commercial
Compr	compression
CADD	computer aided drafting & design
Conc	concrete
Cond	conductor
Const	construction
Cont	continuous
CSB	continuous split barrel sample
Contr	contraction
Contr	contractor
CP	control point
Coord	coordinate
Cor	corner
Corr	corrected
CAES	corrugated aluminum end section
CAP	corrugated aluminum pipe
CMES	corrugated metal end section
CMP	corrugated metal pipe
CPVCP	corrugated poly-vinyl chloride pipe
CSES	corrugated steel end section
CSP	corrugated steel pipe
C	coulomb
Co	County
Crse	course
C Gr	course gravel
CS	course sand
Ct	Court
Xarm	cross arm
Xbuck	cross buck
Xsec	cross sections
Xing	crossing
Xrd	Crossroad
Crn	crown
CF	cubic feet
M3	cubic meter
M3/s	cubic meters per second
CY	cubic yard
Cy/mi	cubic yards per mile
Culv	culvert
C&G	curb & gutter
CI	curb inlet
CR	curb ramp
CS	curve to spiral
C	cut
Dd Ld	dead load
Defl	deflection
Defm	deformed
Deg or D	degree
Dlnt	delineate
Dlntr	delineator
Depr	depression
Desc	description
Det	detail
DWP	detectable warning panel
Dtr	detour
Dia	diameter
Dir	direction
Dist	distance
DM	disturbed material
DB	ditch block
DG	ditch grade
Dbl	double
Dn	down
Dwg	drawing
Dr	drive
Drwy	driveway
DI	drop inlet
D	dry density
Ea	each
Esmt	easement
E	East
EB	Eastbound
Elast	elastomeric
EL	electric locker
E Mtr	electric meter
Elec	electric/al
EDM	electronic distance meter
Elev or El	elevation
Ellipt	elliptical
Emb	embankment
Emuls	emulsion/emulsified
ES	end section
Engr	engineer
ESS	environmental sensor station
Eq	equal
Eq	equation
Evgr	evergreen
Exc	excavation
Exst	existing
Exp	expansion
Expy	Expressway
E	external of curve
Extru	extruded
FOS	factor of safety
F	Fahrenheit
FS	far side
F	farad
Fed	Federal
FP	feed point
Ft	feet/foot
Fn	fence
Fn P	fence post
FO	fiber optic
FB	field book
FD	field drive
F	fill
FAA	fine aggregate angularity
FS	fine sand
FH	fire hydrant
Fl	flange
Flrd	flared
FES	flared end section
F Bcn	flashing beacon
FA	flight auger sample
FL	flow line
Ftg	footing
FM	force main
Fs	foresight
Fnd	found
Fdn	foundation
Frac	fractional
Frwy	freeway
Frt	front
FF	front face
F Disp	fuel dispenser

NORTH DAKOTA DEPARTMENT OF TRANSPORTATION	
07-01-14	
REVISIONS	
DATE	CHANGE

This document was originally issued and sealed by Roger Weigel, Registration Number PE- 2930, on 07/01/14 and the original document is stored at the North Dakota Department of Transportation

NDDOT ABBREVIATIONS

D-101-2

FFP	fuel filler pipes
FLS	fuel leak sensor
Furn	furnish/ed
Gal	gallon
Galv	galvanized
Gar	garage
Gs L	gas line
G Reg	gas line regulator
GMV	gas main valve
G Mtr	gas meter
GSV	gas service valve
GVP	gas vent pipe
GV	gate valve
Ga	gauge
Geod	geodetic
GIS	Geographical Information System
G	giga
GPS	Global Positioning System
Gov	government
Grd	graded/grade
Gr	gravel
Grnd	ground
GWM	ground water monitor
Gdrl	guardrail
Gtr	gutter
H Plg	H piling
Hdwl	headwall
Ha	hectare
Ht	height
HI	height of instrument
Hel	helical
H	henry
Hz	hertz
HDPE	high density polyethylene
HM	high mast
HP	high pressure
HPS	high pressure sodium
Hwy	highway
Hor	horizontal
HBP	hot bituminous pavement
Hr	hour(s)
Hyd	hydrant
Ph	hydrogen ion content
Id	identification
In or "	inch
Incl	inclinometer tube
IMH	inlet manhole
ID	inside diameter
Inst	instrument
Intchg	interchange
Intmdt	intermediate
Intscn	intersection
Inv	invert
IM	iron monument
I Pn	Iron Pin

IP	iron Pipe
Jt	joint
J	joule
Jct	junction
K	kelvin
Kn	kilo newton
Kpa	kilo pascal
Kg	kilogram
Kg/m3	kilogram per cubic meter
Km	kilometer
K	Kip(s)
LS	Land Surveyor (licensed)
LSIT	Land Surveyor In Training
Ln	lane
Lg	large
Lat	latitude
Lt	left
L	length of curve
Lens	lenses
Lvl	level
LB	level book
Lvlng	leveling
Lht	light
LP	light pole
Ltg	lighting
Lig Co	lignite coal
Lig Sl	lignite slack
LF	linear foot
Liq	liquid
LL	liquid limit
L	litre
Lm	loam
Loc	location
LC	long chord
Long.	longitude
Lp	loop
LD	loop detector
Lm	lumen
Lum	luminaire
L Sum	lump sum
Lx	lux
ML	main line
M Hr	man hour
MH	manhole
Mkd	marked
Mkr	marker
Mkg	marking
MA	mast arm
Matl	material
Max	maximum
MC	meander corner
Meas	measure
Mdn	median
MD	median drain
MC	medium curing

M	mega
Mer	meridian
M	meter
M/s	meters per second
M	mid ordinate of curve
Mi	mile
MM	mile marker
MP	mile post
Ml	milliliter
Mm	millimeter
Mm/hr	millimeters per hour
Min	minimum
Misc	miscellaneous
Mon	monument
Mnd	mound
Mtbl	mountable
Mtd	mounted
Mtg	mounting
Mk	muck
Mun	municipal
N	nano
NGS	National Geodetic Survey
NS	near side
Neop	neoprene
Ntwk	network
N	newton
N	North
NE	North East
NW	North West
NB	Northbound
No. or #	number
Obsc	obscure(d)
Obsn	observation
Ocpd	occupied
Ocpy	occupy
Off Loc	office location
O/s	offset
OC	on center
C	one dimensional consolidation
OC	organic content
Orig	original
O To O	out to out
OD	outside diameter
OH	overhead
PMT	pad mounted transformer
Pg	pages
Pntd	painted
Pr	pair
Pnl	panel
Pk	park
PK	Parker-Kalon nail
Pa	pascal
PSD	passing sight distance
Pvmt	pavement
Ped	pedestal

Ped	pedestrian
PPP	pedestrian pushbutton post
Pen.	penetration
Perf	perforated
Per.	perimeter
PL	pipeline
Pl	place
P&P	plan & profile
PL	plastic limit
Pl	plate
Pt	point
PCC	point of compound curve
PC	point of curve
PI	point of intersection
PRC	point of reverse curvature
PT	point of tangent
POC	point on curve
POT	point on tangent
PE	polyethylene
PVC	polyvinyl chloride
PCC	Portland Cement concrete
Lb or #	pounds
PP	power pole
Preempt	preemption
Prefab	prefabricated
Prfmd	preformed
Prep	preperation
Press.	pressure
PRV	pressure relief valve
Prestr	prestressed
Pvt	private
PD	private drive
Prod.	production/produce
Prog	programmed
Prop.	property
Prop Ln	property line
Ppsd	proposed
PB	pull box

NORTH DAKOTA DEPARTMENT OF TRANSPORTATION	
07-01-14	
REVISIONS	
DATE	CHANGE

This document was originally issued and sealed by Roger Weigel, Registration Number PE- 2930, on 07/01/14 and the original document is stored at the North Dakota Department of Transportation

NDDOT ABBREVIATIONS

D-101-3

Qty	quantity
Qtr	quarter
Rad or R	radius
RR	railroad
Rlwy	railway
Rsd	raised
RTP	random traverse point
Rge or R	range
RC	rapid curing
Rec	record
Rcy	recycle
RPCC	recycled Portland cement concrete
Ref	reference
R Mkr	reference marker
RM	reference monument
Refl	reflectorized
RCB	reinforced concrete box
RCES	reinforced concrete end section
RCP	reinforced concrete pipe
RCPS	reinforced concrete pipe sewer
Reinf	reinforcement
Res	reservation
Ret	retaining
Rev	reverse
Rt	right
R/W	right of way
Riv	river
Rd	road
Rdbd	road bed
Rdwy	roadway
RWIS	Roadway Weather Information System
Rk	rock
Rt	route
Salv	salvage(d)
Sd	sand
Sdy Cl	sandy clay
Sdy Cl Lm	sandy clay loam
Sdy Fl	sandy fill
Sdy Lm	sandy loam
San	sanitary sewer line
Sc	scoria
Sec	seconds
Sec	section
SL	section line
Sep	separation
Seq	sequence
Serv	service
Sh	shale
Sht	sheet
Shtng	sheeting
Shldr	shoulder
Sw	sidewalk
S	siemens
SD	sight distance
SN	sign number
Sig	signal
Si Cl	silt clay
Si Cl Lm	silty clay loam
Si Lm	silty loam
Sgl	single
SC	slow curing
SS	slow setting
Sm	small
S	South
SE	South East
SW	South West
SB	Southbound
Sp	spaces
Spcl	special
SA	special assembly
SP	special provisions
G	specific gravity
Spk	spike
SC	spiral to curve
ST	spiral to tangent
SB	split barrel sample
SH	sprinkler head
SV	sprinkler valve
Sq	square
SF	square feet
Km2	square kilometer
M2	square meter
SY	square yard
Stk	stake
Std	standard
N	standard penetration test
Std Specs	Standard Specifications
Sta	station
Sta Yd	station yards
Stm L	steam line
SEC	steel encased concrete
SSD	stopping sight distance
SD	storm drain
St	street
SPP	structural plate pipe
SPPA	structural plate pipe arch
Str	structure
Subd	subdivision
Sub	subgrade
Sub Prep	subgrade preperation
Ss	subsoil
SE	superelevation
SS	supplement specification
Supp	supplemental
Surf	surfacing
Surv	survey
Sym	symmetrical
SI	Systems International
Tan	tangent
T	tangent (semi)
TS	tangent to spiral
Tel	telephone
Tel B	Telephone Booth
Tel P	telephone pole
Tv	television
Temp	temperature
Temp	temporary
TBM	temporary bench mark
T	tesla
T	thinwall tube sample
T/mi	tons per mile
Ts	topsoil
Twp or T	township
Traf	traffic
TSCB	traffic signal control box
Tr	trail
Transf	transformer
TB	transit book
Trans	transition
TT	transmission tower
Trans	transverse
Trav	traverse
TP	traverse point
Trtd	treated
Trmt	treatment
Qc	triaxial compression
TERO	tribal employment rights ordinance
Tpl	triple
TP	turning point
Typ	typical
Qu	unconfined compressive strength
Ugrnd	underground
USC&G	US Coast & Geodetic Survey
USGS	US Geologic Survey
Util	utility
VG	valley gutter
Vap	vapor
Vert	vertical
VC	vertical curve
VCP	vitrified clay pipe
V	volt
Vol	volume
Wkwy	walkway
W	water content
WGV	water gate valve
WL	water line
WM	water main
WMV	water main valve
W Mtr	water meter
WSV	water service valve
WW	water well
W	watt
Wrng	wearing
Wb	weber
WIM	Weigh In Motion
W	West
WB	Westbound
Wrng	wiring
W/	with
W/o	without
WC	witness corner
WGS	World Geodetic System
Z	zenith

NORTH DAKOTA DEPARTMENT OF TRANSPORTATION	
07-01-14	
REVISIONS	
DATE	CHANGE

This document was originally issued and sealed by Roger Weigel, Registration Number PE- 2930, on 07/01/14 and the original document is stored at the North Dakota Department of Transportation

NDDOT UTILITY COMPANY AND ORGANIZATION ABBREVIATIONS

D-101-10

702COM	702 Communications
ACCENT	Accent Communications
AGASSIZ WU	Agassiz Water Users Incorporated
AGC	Assiociated General Contractors of America
All Pl	Alliance Pipeline
ALL SEAS WU	All Seasons Water Users Association
AMOCO Pl	Amoco Pipeline Company
AMRDA HESS	Amerada Hess Corporation
AT&T	AT&T Corporation
B PAW	Bear Paw Energy Incorporated
BAKER ELEC	Baker Electric
BASIN ELEC	Basin Electric Cooperative Incorporated
BEK TEL	Bek Communications Cooperative
BELLE PL	Belle Fourche Pipeline Company
BLM	Bureau of Land Management
BNSF	Burlington Northern Santa Fe Railway
BOEING	Boeing
BRNS RWD	Barnes Rural Water District
BURK-DIV ELEC	Burke-Divide Electric Cooperative
BURL WU	Burleigh Water Users
Cable One	Cable One
CABLE SERV	Cable Services
CAP ELEC	Capital Electric Cooperative Incorporat
CASS CO ELEC	Cass County Electric Cooperative
CASS RWU	Cass Rural Water Users Incorporated
CAV ELEC	Cavalier Rural Electric Cooperative
CBLCOM	Cablecom Of Fargo
CENEX PL	Cenex Pipeline
CENT PL WATER DIST	Central Pipe Line Water District
CENT PWR ELEC	Central Power Electric Cooperative
COE	Corps of Engineers
CONS TEL	Consolidated Telephone
CONT RES	Continental Resource Inc
CPR	Canadian Pacific Railway
D O E	Department Of Energy
DAK CARR	Dakota Carrier Network
DAK CENT TEL	Dakota Central Telephone
DAK RWD	Dakota Rural Water District
DGC	Dakota Gasification Company
DICKEY R NET	Dickey Rural Networks
DICKEY RWU	Dickey Rural Water Users Association
DICKEY TEL	Dickey Telephone
DNRR	Dakota Northern Railroad
DOME PL	Dome Pipeline Company
DVELEC	Dakota Valley Electric Cooperative
DVMW	Dakota, Missouri Valley & Western
ENBRDG	Enbridge Pipelines Incorporated
ENVENTIS	Enventis Telephone
FALK MNG	Falkirk Mining Company
FHWA	Federal Highway Administration
G FKS-TRL WD	Grand Forks-traill Water District
GETTY TRD & TRAN	Getty Trading & Transportation
GLDN W ELEC	Golden West Electric Cooperative
GRGS CO TEL	Griggs County Telephone
GT PLNS NAT GAS	Great Plains Natural Gas Company
HALS TEL	Halstad Telephone Company
IDEA1	Idea1
INT-COMM TEL	Inter-Community Telephone Company
KANEB PL	Kaneb Pipeline Company
KEM ELEC	Kem Electric Cooperative Incorporated
KOCH GATH SYS	Koch Gathering Systems Incorporated
LKHD PL	Lakehead Pipeline Company
LNGDN RWU	Langdon Rural Water Users Incorporated
LWR YELL R ELEC	Lower Yellowstone Rural Electric
MCKNZ CON	McKenzie Consolidated Telcom
MCKNZ ELEC	McKenzie Electric Cooperative
MCKNZ WRD	McKenzie County Water Resource District
MCLEOD	McLeod USA
MCLN ELEC	McLean Electric Cooperative
MCLN-SHRDN R WAT	McLean-Sheridan Rural Water
MDU	Montana-dakota Utilities
MID-CONT CABLE	Mid-Continent Cable
MIDSTATE TEL	Midstate Telephone Company
MINOT CABLE	Minot Cable Television
MINOT TEL	Minot Telephone Company
MISS W W S	Missouri West Water System
MNKOTA PWR	Minnkota Power
MOR-GRAN-SOU ELEC	Mor-gran-sou Electric Cooperative
MOUNT-WILLI ELEC	Mountrail-williams Electric Cooperative
MRE LBTY TEL	Moore & Liberty Telephone
MUNICIPAL	City Water And Sewer
MUNICIPAL	City Of '.....'
N CENT ELEC	North Central Electric Cooperative
N VALL W DIST	North Valley Water District
ND PKS & REC	North Dakota Parks And Recreation
ND TEL	North Dakota Telephone Company
NDDOT	North Dakota Department of Transportation
NDSU SOIL SCI DEPT	NDSU Soil Science Department
NEMONT TEL	Nemont Telephone
NODAK R ELEC	Nodak Rural Electric Cooperative
NOON FRMS TEL	Noonan Farmers Telephone Company
NPR	Northern Plains Railroad
NSP	Northern States Power
NTH PRAIR RW	Northern Prairie Rural Water Association
NTHN BRDR PL	Northern Border Pipeline
NTHN PLNS ELEC	Northern Plains Electric Cooperative Incorporated
NTHWSTRN REF	Northwestern Refinery Company
NW COMM	Northwest Communication Cooperation
ONEOK	Oneok gas
OSHA	Occupational Safety and Health Administration
OTTR TL PWR	Otter Tail Power Company
P L E M	Prairielands Energy Marketing
POLAR COM	Polar Communications
PVT ELEC	Private Electric
QWEST	Qwest Communications
R&T W SUPPLY	R & T Water Supply Association
RAMSEY R SEW	Ramsey Rural Sewer Association
RAMSEY RW	Ramsey Rural Water Association
RAMSEY UTIL	Ramsey County Rural Utilities
RED RIV TEL	Red River Rural Telephone
RESVTN TEL	Reservation Telephone
ROBRTS TEL	Roberts Company Telephone
R-RIDER ELEC	Roughrider Electric Coop
RRVW	Red River Valley & Western Railroad
RSR ELEC	R.S.R. Electric Cooperative
S E W U	South East Water Users Incorporated
SCOTT CABLE	Scott Cable Television Dickinson
SHERDN ELEC	Sheridan Electric Cooperative
SHEYN VLY ELEC	Sheyenne Valley Electric Cooperative
SKYTECH	Skyland Technologies Incorporated
SLOPE ELEC	Slope Electric Cooperative Incorporated
SOURIS RIV TELCOM	Souris River Telecommunications
ST WAT COMM	State Water Commission
STATE LN WATER	State Line Water Cooperative
STER ENG	Sterling Energy
STUT RWU	Stutsman Rural Water Users
SW PL PRJ	Southwest Pipeline Project
T M C	Turtle Mountain Communications
TCI	TCI of North Dakota
TESORO HGH PLNS PL	Tesoro High Plains Pipeline
TRI-CNTY WU	Tri-County Water Users Incorporated
TRL CO RWU	Traill County Rural Water Users
UNTD TEL	United Telephone
UPPR SOUR WUA	Upper Souris Water Users Association
US SPRINT	U.S. Sprint
USAF MSL CABLE	U.S.A.F. Missile Cable
USFWS	US Fish and Wildlife Service
USW COMM	U.S. West Communications
VRNDRY ELEC	Verendrye Electric Cooperative
W RIV TEL	West River Telephone Incorporated
WEB	W. E. B. Water Development Association
WILLI RWA	Williams Rural Water Association
WILSTN BAS PL	Williston Basin Interstate Pipeline Company
WLSH RWD	Walsh Water Rural Water District
WOLVRTN TEL	Wolverton Telephone
XLENER	Xcel Energy
YSVR	Yellowstone Valley Railroad

NORTH DAKOTA DEPARTMENT OF TRANSPORTATION	
07-01-14	
REVISIONS	
DATE	CHANGE

This document was originally issued and sealed by Roger Weigel, Registration Number PE- 2930, on 07/01/14 and the original document is stored at the North Dakota Department of Transportation

D-101-20

Line Styles

- Limits of Const Transition Line
- Bale Check
- Rock Check
- Sight Distance Triangle Line
- Small Hidden Object
- Dimension Leader
- Existing Ground
- Existing Topsoil (Cross Section View)
- Large Hidden Object
- Edge Drain
- D — Geotextile Fabric Type D
- E — Existing Electrical
- FO — Existing Fiber Optic Line
- FO — Existing TV Fiber Optic
- G — Existing Gas Pipe
- Geo — Geogrid
- OH — Existing Overhead Utility Line
- P — Existing Power
- PL — Existing Fuel Pipeline
- PL — Existing Undefined Above Ground Pipe Line
- R — Geotextile Fabric Type R
- R — Geotextile Fabric Type R1
- REMOVE — Remove Line
- RR — Geotextile Fabric Type RR
- S — Geotextile Fabric Type S
- S — Floating Silt Curtain
- T — Existing Telephone Line
- TV — Existing TV Line
- Void — Existing Assumed Ground (Not Surveyed)
- Void — Tentative Ground Line
- W — Existing Water or Steam Line
- Existing Under Drain
- Under Drain
- Wall
- Existing Slotted Drain
- Existing Cemetary Boundary
- Centerline Pavement Marking
- Barrier with Centerline Pavement Marking
- Barrier Pavement Marking
- Stripe 4 IN Dotted Extension White
- Stripe 8 IN Dotted Extension White
- Stripe 8 IN Lane Drop
- Wetland Mitigation
- Existing Box Culvert Bridge
- Existing Concrete Surface
- Existing Drainage Structure
- Easement
- Existing Concrete
- Existing Easement
- Existing Gravel Surface
- Existing Aggregate (Cross Section View)
- Existing Curb and Gutter (Cross Section View)
- Existing Riprap
- Existing Underground Vault or Lift Station
- Tangent Line
- Hidden Object
- Existing Dirt Surface
- Existing Conduit
- Topsoil Profile
- Existing Conductor
- Conductor
- Fiber Optic
- Existing Loop Detector
- Subgrade, Subcut or Ditch Grade
- Existing Asphalt Surface
- Existing Asphalt (Cross Section View)
- Existing Reinforcement Rebar
- Existing Tie Point Line
- Existing State or International Line
- Existing Quarter Section Line
- Existing County
- Existing Section Line
- Existing Township
- Existing Railroad Centerline
- Centerline
- Existing Centerline
- Supplemental Contour
- Right of Way
- Existing Right of Way
- Existing Right of Way Railroad
- Failure Line
- Existing Conditions
- Existing Ground (Details)
- Existing Sixteenth Section Line
- Existing Right of Way Not State Owned
- Phantom Object
- Centerline Main
- Existing Guardrail Cable
- Existing Guardrail Metal
- Existing Edge of Water
- Excavation Limits
- Existing Government Lot Line
- Existing Adjacent Block Lines
- Existing Adjacent Lot Lines
- Existing Adjacent Property Line
- Existing Adjacent Subdivision Lines

NORTH DAKOTA DEPARTMENT OF TRANSPORTATION	
07-01-14	
REVISIONS	
DATE	CHANGE

This document was originally issued and sealed by Roger Weigel, Registration Number PE- 2930, on 07/01/14 and the original document is stored at the North Dakota Department of Transportation

D-101-21

Line Styles

- Subgrade Reinforcement
- Existing Down Guy Wire Down Guy
- Existing Fence
- Existing Railroad
- Existing Sanitary Sewer
- Existing Sanitary Force Main
- Existing Storm Drain
- Existing Storm Drain Force Main
- Fence
- Silt Fence
- Existing Field Line
- Exst Flow
- Flow
- Existing Culvert
- Existing Curb
- Existing Valley Gutter
- Existing Driveway Gutter
- Existing Curb and Gutter
- Existing Mountable Curb and Gutter
- Existing Double Micro Loop Detector
- Micro Loop Detector Double
- Existing Overhead Sign Structure
- Existing Micro Loop Detector
- Micro Loop Detector
- Existing Overhead Sign Structure Cantilever
- Existing Railroad Switch
- Overhead Sign Structure Cantilever
- 24 Inch Pipe
- Reinforced Concrete Pipe
- Signal Head with Mast Arm
- Existing Signal Head with Mast Arm
- Tie Bar at Random Spacing
- 3-Cable w Posts
- Existing 3-Cable w Posts
- Site Boundary
- Fiber Rolls
- Doweled Joint
- Tie Bar 30 Inch 4 Foot Center to Center
- Tie Bar 18 Inch 3 Foot Center to Center
- Existing Berm, Dike, Pit, or Earth Dam
- Existing Ditch Block
- Depression Contours
- Existing City Corporate Limits or Reservation Boundary
- Gravel Pit - Borrow Area
- Existing Tree Boundary
- Tree Row
- Existing Brush or Shrub Boundary
- Existing Retaining Wall
- Existing Planter or Wall
- Retaining Wall (Plan View)
- Sheet Piling
- W-Beam w Posts
- Existing W-Beam Guardrail with Posts
- Exst Wet Area-Vegetation Break
- Existing Wetland Delineated

NORTH DAKOTA DEPARTMENT OF TRANSPORTATION	
07-01-14	
REVISIONS	
DATE	CHANGE

This document was originally issued and sealed by Roger Weigel, Registration Number PE- 2930, on 07/01/14 and the original document is stored at the North Dakota Department of Transportation

Symbols

D-101-30

- North Arrow (Half Scale)
- Truck Mounted Attenuator
- Type I Barricade
- Type II Barricade
- Type III Barricade
- Catch Basin
- Cairn or Stone Circle
- Video Detection Camera
- Storm Drain Cap or Stub
- Corrugated Metal End Section 18 Inch
- Corrugated Metal End Section 24 Inch
- Corrugated Metal End Section 30 Inch
- Corrugated Metal End Section 36 Inch
- Corrugated Metal End Section 42 Inch
- Corrugated Metal End Section 48 Inch
- Concrete Foundation
- Ground Connection Conductor
- Neutral Connection Conductor
- Phase 1 Connection Conductor
- Phase 2 Connection Conductor
- Traffic Cone
- Signal Controller
- Pad Mounted Signal Controller
- Alignment Data Point
- Emergency Vehicle Detector
- Attenuation Device
- Diamond Grade Delineator Type A
- Diamond Grade Delineator Type B
- Diamond Grade Delineator Type C
- Diamond Grade Delineator Type D
- Diamond Grade Delineator Type E
- Flexible Delineator
- Flexible Delineator Type A
- Flexible Delineator Type B
- Flexible Delineator Type C
- Flexible Delineator Type D
- Flexible Delineator Type E
- Delineator Type A
- Delineator Type A Reset
- Delineator Type B
- Delineator Type B Reset
- Delineator Type C
- Delineator Type D
- Delineator Type E
- Delineator Drums
- Spot Elevation
- Existing Access Control Arrow
- Existing Artifact
- Existing Flashing Beacon
- Existing Benchmark
- Existing Railroad Battery Box
- Existing Bush or Shrub
- Existing Gas Cap or Stub
- Existing Sanitary Cap or Stub
- Existing Storm Drain Cap or Stub
- Existing Water Cap or Stub
- Existing Sanitary Cleanout
- Existing Concrete Foundation
- Existing Traffic Signal Controller
- Existing Pad Mounted Signal Controller
- Existing Sixteenth Section Corner
- Existing Quarter Section Corner
- Existing Section Corner
- Existing Railroad Crossbuck
- Existing Satellite Dish
- Existing Fuel Dispensers
- Existing Flexible Delineator Type A
- Existing Flexible Delineator Type B
- Existing Flexible Delineator Type C
- Existing Flexible Delineator Type D
- Existing Flexible Delineator Type E
- Existing Delineator Type A
- Existing Delineator Type B
- Existing Delineator Type C
- Existing Delineator Type D
- Existing Delineator Type E
- Existing EFB Misc
- Existing Flashing Beacon
- Existing Pipe Mounted Flasher
- Existing Pad Mounted Feed Point
- Existing Pipe Mounted Feed Point with Pad
- Existing Pole Mounted Feed Point
- Existing Railroad Frog
- Existing Snow Gate 18
- Existing Snow Gate 28
- Existing Snow Gate 40
- Existing Headwall
- Existing Pedestrian Head with Number
- Existing Signal Head
- Existing Sprinkler Head
- Existing Fire Hydrant
- Existing Catch Basin Drop Inlet
- Existing Curb Inlet
- Existing Manhole Inlet
- Existing Junction Box

NORTH DAKOTA DEPARTMENT OF TRANSPORTATION	
07-01-14	
REVISIONS	
DATE	CHANGE

This document was originally issued and sealed by Roger Weigel, Registration Number PE-2930, on 07/01/14 and the original document is stored at the North Dakota Department of Transportation

Symbols

D-101-31

- Existing Light Standard
- Existing High Mast Light Standard 10 Luminaire
- Existing High Mast Light Standard 3 Luminaire
- Existing High Mast Light Standard 4 Luminaire
- Existing High Mast Light Standard 5 Luminaire
- Existing High Mast Light Standard 6 Luminaire
- Existing High Mast Light Standard 7 Luminaire
- Existing High Mast Light Standard 8 Luminaire
- Existing High Mast Light Standard 9 Luminaire
- Existing Overhead Sign Structure Load Center
- Existing Luminaire
- Existing Light Standard Luminaire
- Existing Federal Mailbox
- Existing Private Mailbox
- Existing Meander Section Corner
- Existing Meter
- Existing Electrical Manhole
- Existing Gas Manhole
- Existing Sanitary Manhole
- Existing Sanitary Force Main Manhole
- Existing Sanitary Manhole with Valve
- Existing Storm Drain Manhole
- Existing Force Main Storm Drain Manhole
- Existing Force Main Storm Drain Manhole with Valve
- Existing Telephone Manhole
- Existing Manhole with Valve Water
- Existing Water Manhole
- Existing Mile Post Type A
- Existing Mile Post Type B
- Existing Mile Post Type C
- Existing Reference Marker
- Existing RW Marker
- Existing Utility Marker
- Iron Monument Found
- Iron Pin R/W Monument
- Existing Object Marker Type I
- Existing Object Marker Type II
- Existing Object Marker Type III
- Existing Electrical Pedestal
- Existing Telephone Pedestal
- Existing Fiber Optic Telephone Pedestal
- Existing TV Pedestal
- Existing Fiber Optic TV Pedestal
- Existing Fuel Filler Pipes
- Existing Traverse PI Aerial Panel
- Existing Pole
- Existing Power Pole
- Existing Power Pole with Transformer
- Existing Telephone Pole
- Existing Wood Pole
- Existing Post
- Existing Pedestrian Push Button Post
- Existing Control Point CP
- Existing Control Point GPS-RTK
- Existing Control Point TRI
- Existing Reference Marker Point NGS
- Existing Pull Box
- Existing Intelligent Transportation Pull Box
- Existing Water Pump
- Existing Slotted Reinforced Concrete Pipe
- Existing RR Profile Spot
- Existing Fuel Leak Sensors
- Existing Highway Sign
- Existing Miscellaneous Spot
- Existing Lighting Standard Pole
- Existing Traffic Signal Standard
- Existing Transformer
- Existing Large Evergreen Tree
- Existing Small Evergreen Tree
- Existing Large Tree
- Existing Small Tree
- Existing Tree Trunk
- Existing Pad Mounted Traffic Signal Control Box
- Existing Undefined Manhole
- Existing Undefined Pull Box
- Existing Undefined Pedestal
- Existing Undefined Valve
- Existing Undefined Pipe Vent
- Existing Gas Valve
- Existing Water Valve
- Existing Fuel Pipe Vent
- Existing Gas Pipe Vent
- Existing Sanitary Pipe Vent
- Existing Storm Drain Pipe Vent
- Existing Water Pipe Vent
- Existing Weather Station
- Existing Ground Water Well Bore Hole
- Existing Windmill or Tower
- Existing Witness Corner
- Flashing Beacon
- Flagger
- Pipe Mounted Flasher
- Sanitary Force Main with Valve

NORTH DAKOTA DEPARTMENT OF TRANSPORTATION	
07-01-14	
REVISIONS	
DATE	CHANGE

This document was originally issued and sealed by Roger Weigel, Registration Number PE-2930, on 07/01/14 and the original document is stored at the North Dakota Department of Transportation

Symbols

D-101-32

- Pad Mounted Feed Point
- Pipe Mounted Feed Point with Pad
- Pole Mounted Feed Point
- Headwall
- Double Headwall with Vegitation Barrier
- Single Headwall with Vegitation Barrier
- Pole Mounted Head
- Sprinkler Head
- Fire Hydrant
- Inlet Type 1
- Inlet Type 2
- Double Inlet Type 2
- Inlet Grate Type 2
- Junction Box
- High Mast Light Standard 10 Luminaire
- High Mast Light Standard 3 Luminaire
- High Mast Light Standard 4 Luminaire
- High Mast Light Standard 5 Luminaire
- High Mast Light Standard 6 Luminaire
- High Mast Light Standard 7 Luminaire
- High Mast Light Standard 8 Luminaire
- High Mast Light Standard 9 Luminaire
- Relocate Light Standard
- Overhead Sign Structure Load Center
- Light Standard 100 Watt High Pressure Sodium Vapor Luminaire
- Light Standard 1000 Watt High Pressure Sodium Vapor Luminaire
- Light Standard 150 Watt High Pressure Sodium Vapor Luminaire
- Light Standard 175 Watt High Pressure Sodium Vapor Luminaire
- Light Standard 200 Watt High Pressure Sodium Vapor Luminaire
- Light Standard 250 Watt High Pressure Sodium Vapor Luminaire
- Light Standard 310 Watt High Pressure Sodium Vapor Luminaire
- Light Standard 35 Watt High Pressure Sodium Vapor Luminaire
- Light Standard 400 Watt High Pressure Sodium Vapor Luminaire
- Light Standard 50 Watt High Pressure Sodium Vapor Luminaire
- Light Standard 70 Watt High Pressure Sodium Vapor Luminaire
- Light Standard 700 Watt High Pressure Sodium Vapor Luminaire
- Manhole
- Manhole 48 Inch
- Sanitary Force Main Manhole
- Sanitary Sewer Manhole
- Storm Drain Manhole
- Storm Drain Manhole with Inlet
- Reset Mile Post
- Mile Post Type A
- Mile Post Type B
- Mile Post Type C
- Right of Way Marker
- Tubular Marker
- Alignment Monument
- Iron Pin Reference Monument
- Object Marker Type I
- Object Marker Type II
- Object Marker Type III
- Caution Mode Arrow Panel
- Back to Back Vertical Panel Sign
- Double Direction Arrow Panel
- Left Directional Arrow Panel
- Right Directional Arrow Panel
- Sequencing Arrow Panel
- Truck Mounted Arrow Panel
- Power Pole
- Wood Pole
- Pedestrian Push Button Post
- Property Corner
- Pull Box
- Intelligent Transportation Pull Box
- Sanitary Pump
- Storm Drain Pump
- Reinforced Pavement
- Reinforced Concrete End Section 15 Inch
- Reinforced Concrete End Section 18 Inch
- Reinforced Concrete End Section 24 Inch
- Reinforced Concrete End Section 30 Inch
- Reinforced Concrete End Section 36 Inch
- Reinforced Concrete End Section 42 Inch
- Reinforced Concrete End Section 48 Inch
- Reinforced Concrete End Section 54 Inch
- Reset Right of Way Marker
- Reset USGS Marker
- Right of Way Markers
- Riser 30 Inch
- CSB — Continuous Split Barrel Sample
- FA — Flight Auger Sample
- SB — Split Barrel Sample
- T — Thinwall Tube Sample
- Highway Sign
- SNOW GATE 18 FT
- SNOW GATE 28 FT
- SNOW GATE 40 FT
- N — Standard Penetration Test
- Transformer
- Incl — Inclinometer Tube
- Underdrain Cleanout
- Excavation Unit
- Water Valve

NORTH DAKOTA DEPARTMENT OF TRANSPORTATION	
07-01-14	
REVISIONS	
DATE	CHANGE

This document was originally issued and sealed by Roger Weigel, Registration Number PE-2930, on 07/01/14 and the original document is stored at the North Dakota Department of Transportation

BREAKAWAY SYSTEMS FOR CONSTRUCTION ZONE SIGNS

D-704-7

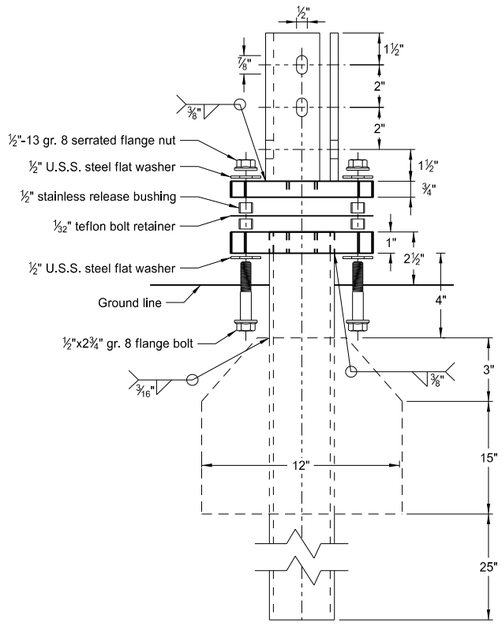

Multi-Directional
Slip Base Assembly

Perforated Tube

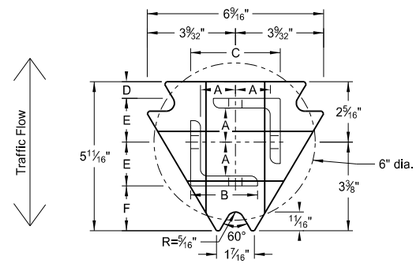

Top Post Receiver
Plate - ASTM A572 grade 50
Angle Receiver - 2½"x2½"x⅜" ASTM A36 structural angle

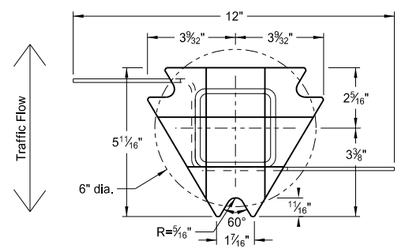

Bottom Soil Stub
Tube - 3"x3"x7 gauge ASTM A500 grade B tube
Stabilizing Wing - 7 gauge H.R.P.O. ASTM A1011
Plate - ASTM A572 grade 50

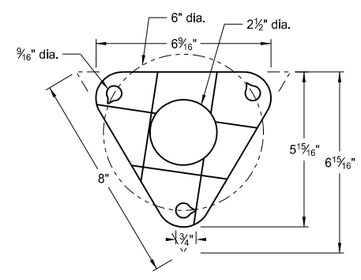

Bolt Retainer for Base Connection
Bolt Retainer- 1/32" Reprocessed Teflon

Notes:

1. Slip base bolts shall be torqued as specified by the manufacturer.
2. Anchor shall have a yield strength of 43.9 KSI and tensile strength of 59.3 KSI.
3. The 4" vertical clearance is required for the anchor or breakaway base. The 4"x60" measurement shall be made above and below post location and also back and ahead of the post.
4. When used in concrete sidewalk, anchor shall be same except without the wings.
5. Four post signs shall have over 7' between the first and the fourth posts.

Telescoping Perforated Tube						
Number of Posts	Post Size in.	Wall Thick-ness Gauge	Sleeve Size in.	Wall Thick-ness Gauge	Slip Base	Anchor Size without Slip Base in.
1	2	12			No	2¼
1	2¼	12			No	2½
1	2½	12			(A)	3
1	2½	10			Yes	
1	2¼	12	2	12	Yes	
1	2½	12	2¼	12	Yes	
2	2	12			No	2¼
2	2¼	12			No	2½
2	2½	12			Yes	
2	2½	12			Yes	
2	2¼	10	2	12	Yes	
2	2½	12	2¼	12	Yes	
3 & 4	2½	12			Yes	
3 & 4	2½	10			Yes	
3 & 4	2½	12	2¼	12	Yes	
3 & 4	2¼	12	2	12	Yes	
3 & 4	2½	10	2 3/16	10	Yes	

(A) The breakaway base is required when the support is placed in weak soils. The Engineer shall determine if the soils are weak.

(B) The 2 3/16"x10 ga. may be inserted into 2½"x10 ga. for additional wind load.

Properties of Telescoping Perforated Tube						
Tube Size in.	Wall Thickness in.	U.S. Standard Gauge	Weight per Foot lbs.	Moment of Inertia in.^{4}	Cross Sec. Area in.^{2}	Section Modulus in.^{3}
1½ x 1½	0.105	12	1.702	0.129	0.380	0.172
2 x 2	0.105	12	2.416	0.372	0.590	0.372
2¼ x 2¼	0.105	12	2.773	0.561	0.695	0.499
2 3/16 x 2 3/16	0.135	10	3.432	0.605	0.841	0.590
2½ x 2½	0.105	12	3.141	0.804	0.803	0.643
2½ x 2½	0.135	10	4.006	0.979	1.010	0.785

Top Post Receiver Data Table						
Square Post Sizes (B)	A	B	C	D	E	F
2 3/16"x10 ga.	1 9/64"	2½"	3 1/32"	25/32"	1 33/64"	1⅞"
2½"x10 ga.	1 9/32"	2½"	3 5/16"	⅝"	1 21/32"	1¾"

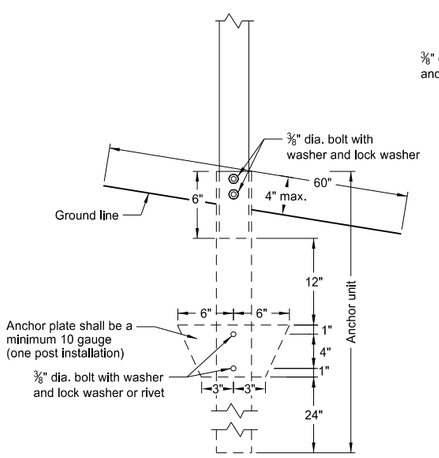

Anchor Unit and Post Assembly

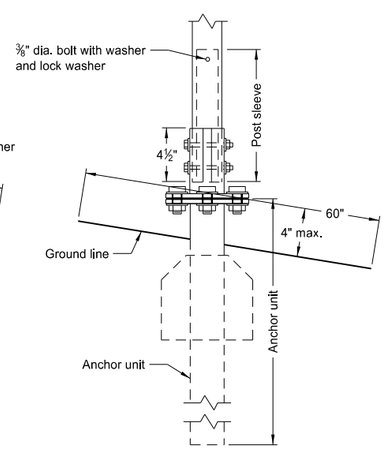

Multi-Directional
Slip Base Anchor Unit
and Post Sleeve Assembly

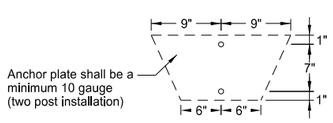

NORTH DAKOTA DEPARTMENT OF TRANSPORTATION	
2-28-14	
REVISIONS	
DATE	CHANGE

This document was originally issued and sealed by Roger Weigel, Registration Number PE- 2930, on 2/28/14 and the original document is stored at the North Dakota Department of Transportation

BREAKAWAY SYSTEMS FOR CONSTRUCTION ZONE SIGNS

D-704-8

U-Channel Post

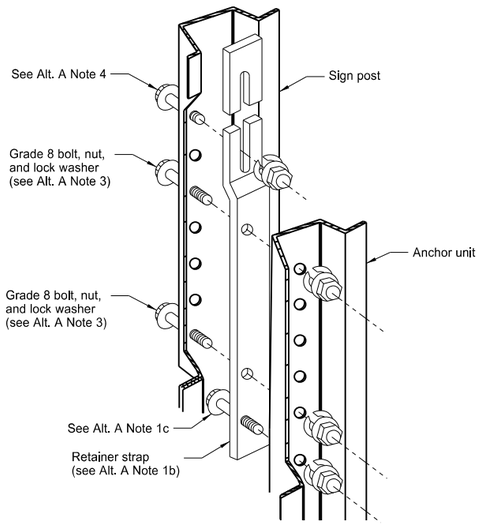

Detail A

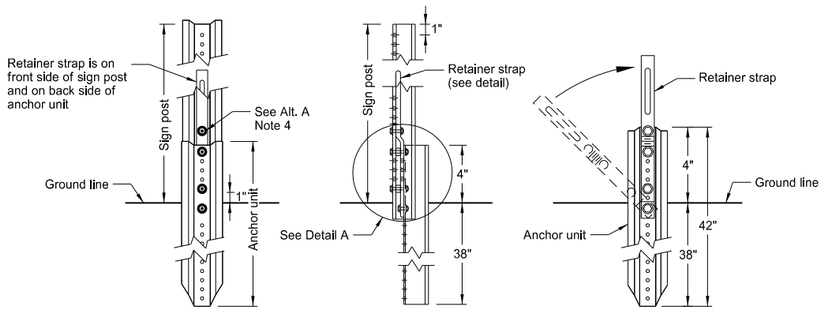

Front View | Side View | Back View

Breakaway U-Channel Detail
Alternate A

A maximum of 2 posts shall be installed within 7'.

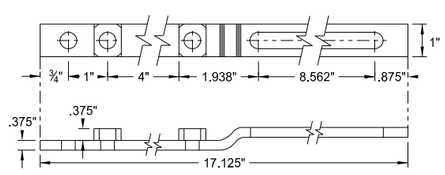

Retainer Strap Detail

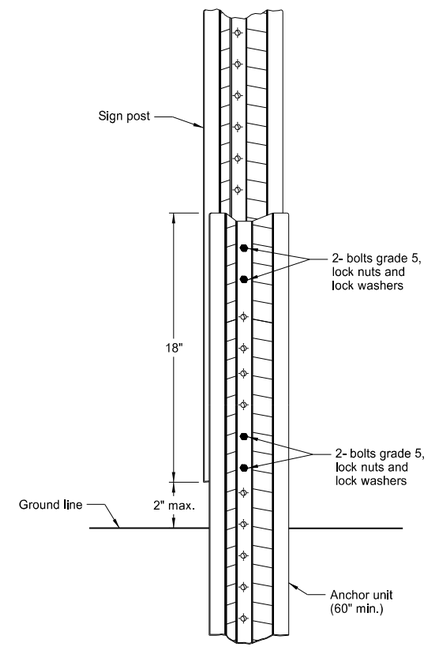

Breakaway U-Channel Splice Detail
Alternate B
(2.5 and 3 lb/ft)

A maximum of 3 posts shall be installed within 7'.

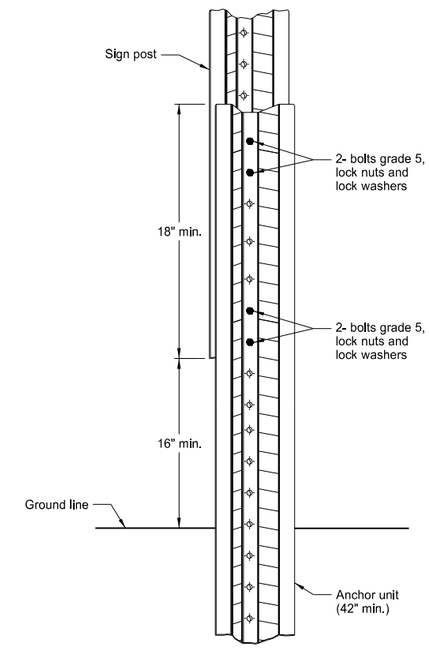

Breakaway U-Channel Splice Detail
Alternate C
(2.5 and 3 lb/ft)

A maximum of 3 posts shall be installed within 7'.

Alternate A Steps of Installation:

1. a) Drive anchor unit to within 12" of ground level.
   b) Proper assembly established by lining up the bottom hole of retainer strap with the 6th hole from the top of the anchor unit.
   c) Assemble strap to back of anchor unit using 5/16"x2" bolt, lock washer and nut.
   d) Rotate strap 90° to left.
2. a) Drive anchor unit to 4" above ground.
   b) Rotate strap to vertical position.
3. a) Place 5/16"x2" bolt, lock washer and nut in bottom of sign post to facilitate alignment of sign post with proper hole in anchor unit.
   b) Alternately tighten two connector bolts.
4. Complete assembly by tightening 5/16"x2" bolt (this fastens sign post to retainer strap).
5. The base post, strap and sign post shall be properly nested. Proper nesting occurs when all flat surfaces of the base post, strap, and sign post at the bolts have full contact across the entire width.

NORTH DAKOTA DEPARTMENT OF TRANSPORTATION	
2-28-14	
REVISIONS	
DATE	CHANGE

This document was originally issued and sealed by Roger Weigel, Registration Number PE- 2930, on 2/28/14 and the original document is stored at the North Dakota Department of Transportation

CONSTRUCTION SIGN DETAILS
TERMINAL AND GUIDE SIGNS

D-704-9

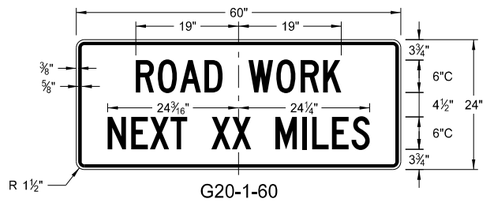

G20-1-60
Legend: black (non-refl)
Background: orange

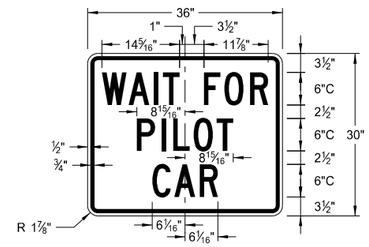

G20-4b-36
Legend: black (non-refl)
Background; orange

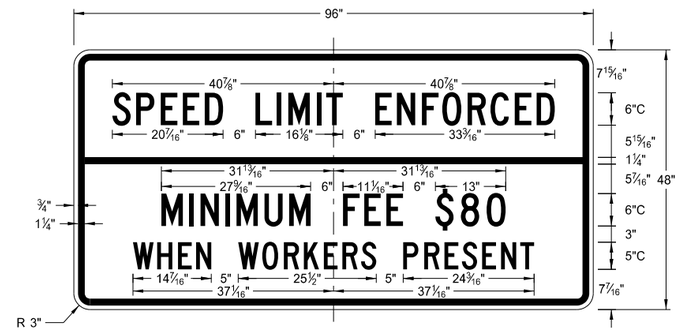

G20-55-96
Legend: black (non-refl)
Background: orange

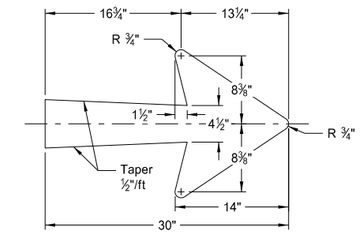

E5-1-48

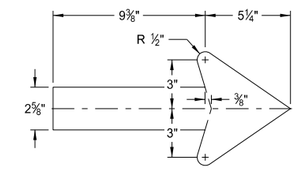

G20-50a-72
G20-52a-72

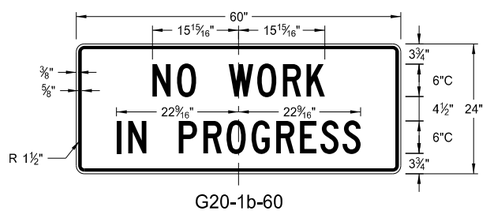

G20-1b-60
Legend: black (non-refl)
Background: orange

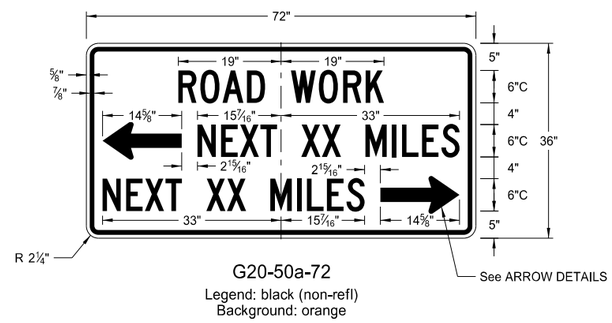

G20-50a-72
Legend: black (non-refl)
Background: orange

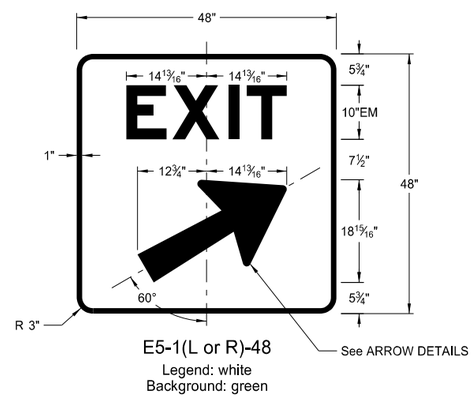

E5-1(L or R)-48
Legend: white
Background: green

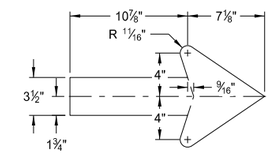

M4-9(L or R)-30
Right or Left

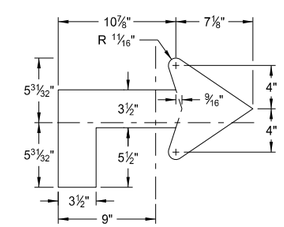

M4-9(L or R)-30
Advanced Right or Left

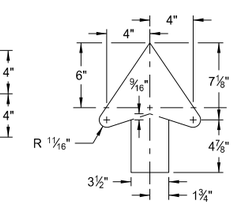

M4-9-30
Straight

ARROW DETAILS

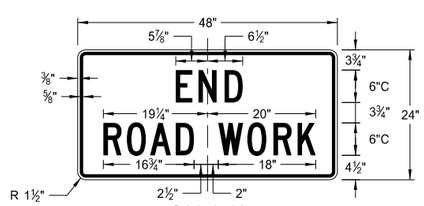

G20-2-48
Legend: black (non-refl)
Background: orange

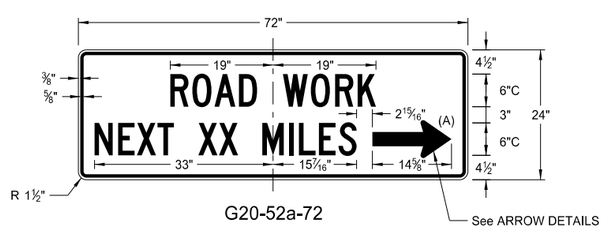

G20-52a-72
Legend: black (non-refl)
Background: orange

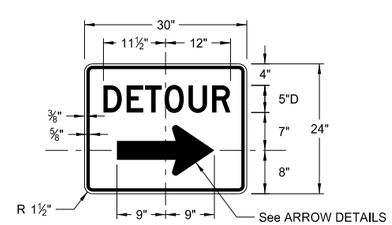

M4-9(L or R)-30 &
M4-9-30
Legend: black (non-refl)
Background: orange

NOTES:

(A) Arrow may be right or left of the legend to indicate construction to the right or left.

NORTH DAKOTA DEPARTMENT OF TRANSPORTATION	
8-13-13	
REVISIONS	
DATE	CHANGE

This document was originally issued and sealed by Roger Weigel, Registration Number PE- 2930, on 8/13/13 and the original document is stored at the North Dakota Department of Transportation

CONSTRUCTION SIGN DETAILS
REGULATORY SIGNS

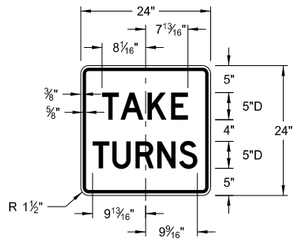

R1-50-24
Legend: black (non-refl)
Background: white

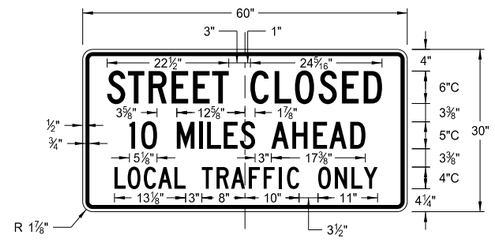

R11-3c-60
Legend: black (non-refl)
Background: white

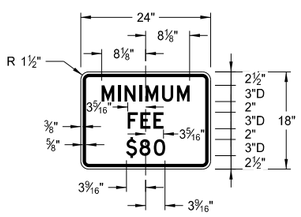

R2-1a-24
Legend: black (non-refl)
Background: white

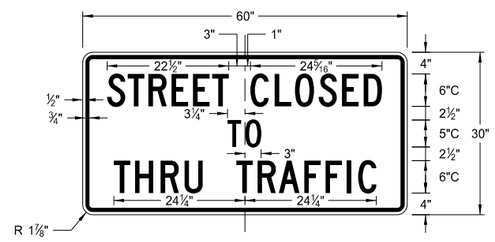

R11-4a-60
Legend: black (non-refl)
Background: white

R11-2a-48
Legend: black (non-refl)
Background: white

NORTH DAKOTA DEPARTMENT OF TRANSPORTATION	
8-13-13	
REVISIONS	
DATE	CHANGE

This document was originally issued and sealed by Roger Weigel, Registration Number PE- 2930, on 8/13/13 and the original document is stored at the North Dakota Department of Transportation

D-704-11

CONSTRUCTION SIGN DETAILS
WARNING SIGNS

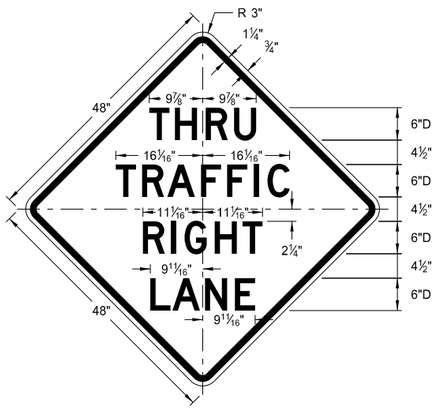

W5-8-48
Legend: black (non-refl)
Background: orange

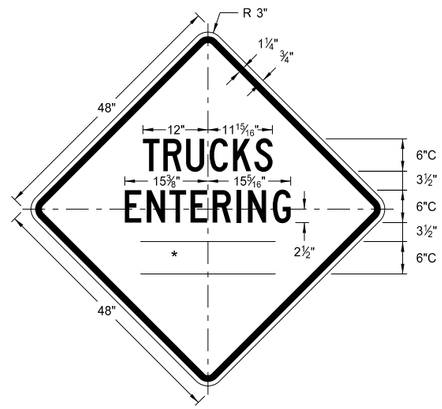

W8-54-48
Legend: black (non-refl)
Background: orange

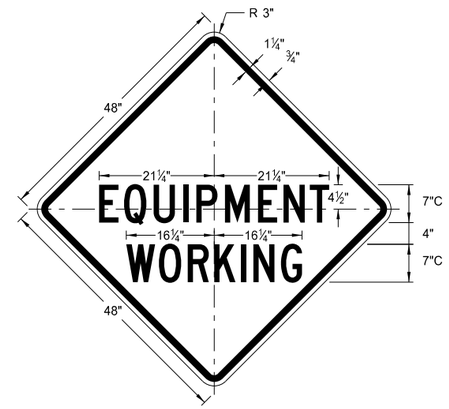

W20-51-48
Legend: black (non-refl)
Background: orange

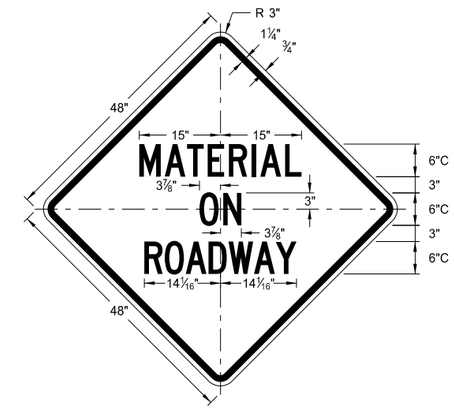

W21-51-48
Legend: black (non-refl)
Background: orange

WORD	LETTER SPACING
AHEAD	Standard
200 FT	Standard
350 FT	Standard
500 FT	Standard
1000 FT	Reduce 40%
1500 FT	Reduce 40%
½ MILE	Reduce 50%
1 MILE	Standard

* DISTANCE MESSAGES

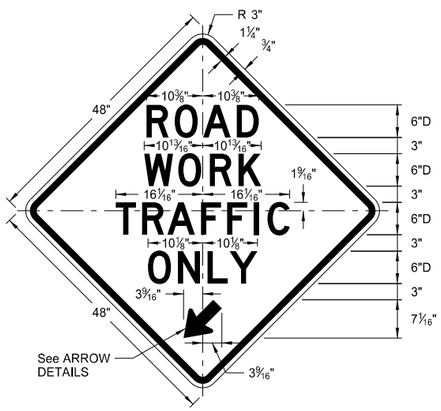

W5-9-48
Legend: black (non-refl)
Background: orange

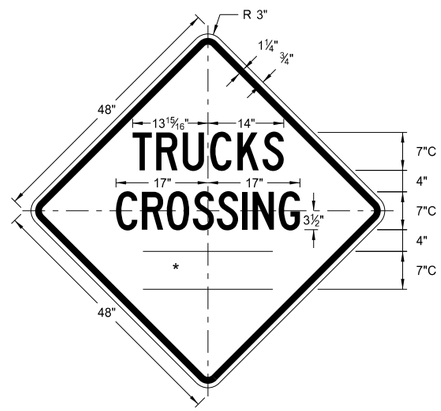

W8-55-48
Legend: black (non-refl)
Background: orange

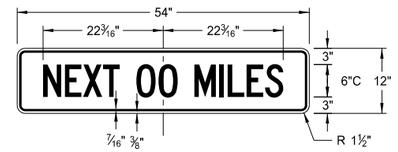

W20-52-54
Legend: black (non-refl)
Background: orange

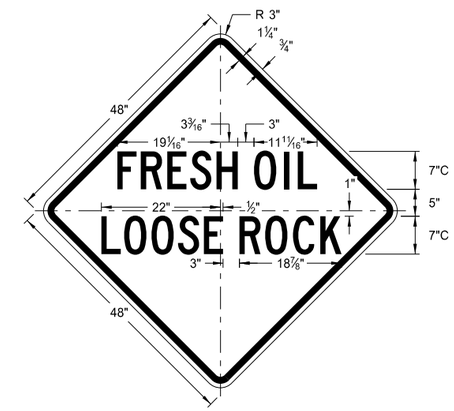

W22-8-48
Legend: black (non-refl)
Background: orange

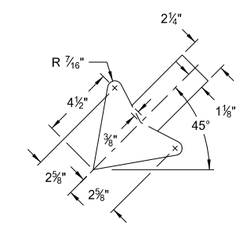

W5-9-48

ARROW DETAILS

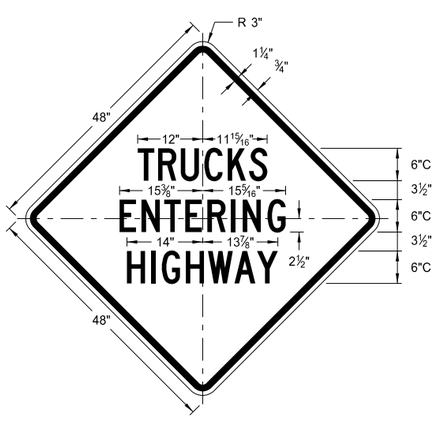

W8-53-48
Legend: black (non-refl)
Background: orange

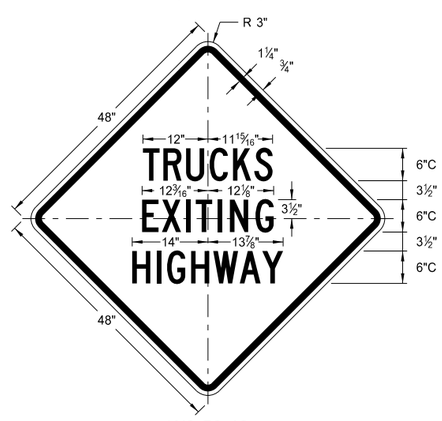

W8-56-48
Legend: black (non-refl)
Background: orange

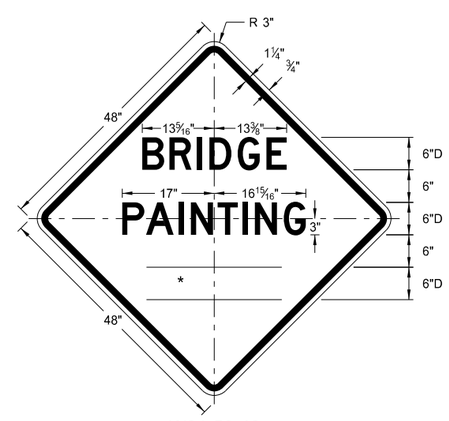

W21-50-48
Legend: black (non-refl)
Background: orange

NORTH DAKOTA DEPARTMENT OF TRANSPORTATION	
8-13-13	
REVISIONS	
DATE	CHANGE

This document was originally issued and sealed by Roger Weigel, Registration Number PE- 2930, on 8/13/13 and the original document is stored at the North Dakota Department of Transportation

SHOULDER CLOSURE TAPERS

D-704-12

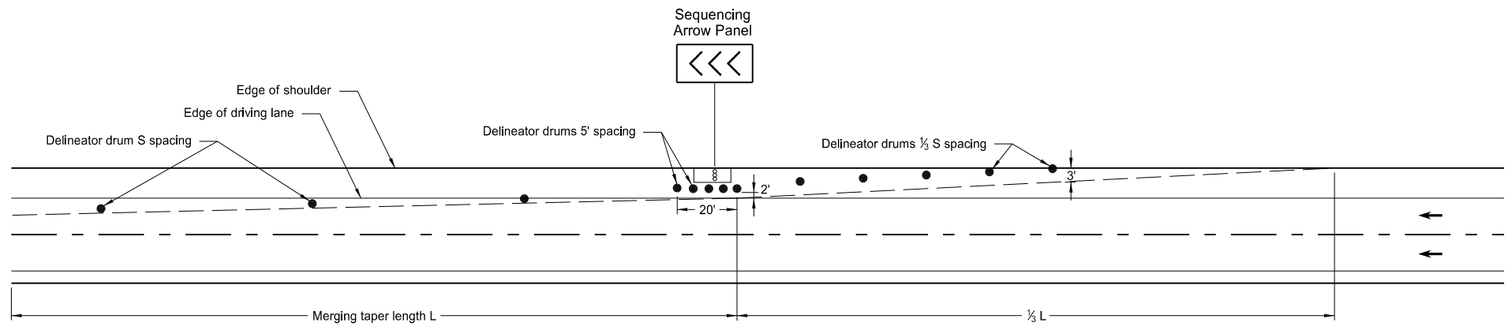

SHOULDER CLOSURE WITH LANE CLOSURE
(when shoulder is 8' or wider)

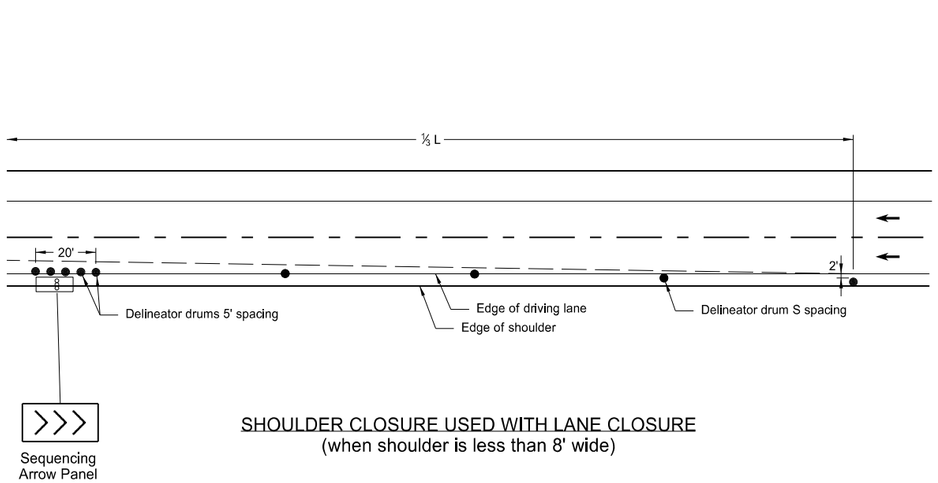

SHOULDER CLOSURE USED WITH LANE CLOSURE
(when shoulder is less than 8' wide)

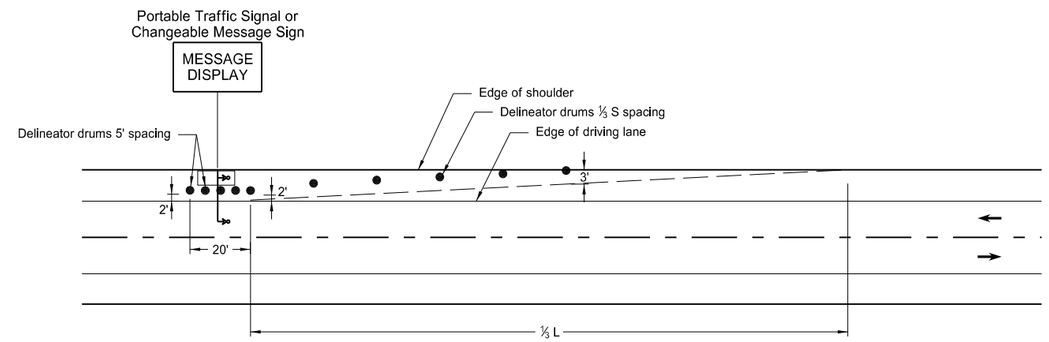

PORTABLE TRAFFIC SIGNAL OR CHANGEABLE MESSAGE SIGN ON SHOULDER

KEY			
●	Delineator Drum	∞	Sequencing Arrow Panel
∘	Message Display		Portable Traffic Signal

Notes:

1. S = Posted Speed Limit in mph
   W = Width of offset in feet
   L = Taper length in feet
   $L = WS^2/60$ (40mph or less)
   L = WS (45mph or more)

2. If a shoulder taper is used, it should have a length of approximately ⅓L. If a shoulder is used as a travel lane, a normal merging or shifting taper should be used.

3. When paved shoulders of 8 foot width or more are closed, channelizing devices shall be used to close the shoulder in advance to delineate the beginning of the work space and direct vehicular traffic to remain within the traveled way.

NORTH DAKOTA DEPARTMENT OF TRANSPORTATION	
10-3-13	
REVISIONS	
DATE	CHANGE

This document was originally issued and sealed by Roger Weigel Registration Number PE- 2930, on 10/3/13 and the original document is stored at the North Dakota Department of Transportation

BARRICADE AND CHANNELIZING DEVICE DETAILS

D-704-13

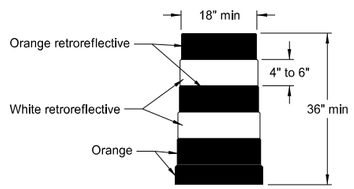

DELINEATOR DRUM

The markings on drums shall be horizontal, circumferential, alternating orange and white retroreflective stripes 4" to 6" wide. Each drum shall have a minimum of two orange and two white stripes with the top stripe being orange. Any nonretroreflectorized spaces between the horizontal orange and white stripes shall not exceed 3" wide. Stripes shall not be placed on ribs or indentations in the drum. Drums shall have closed tops that will not allow collection of construction debris or other debris. Ballast shall not be placed on the top of a drum.

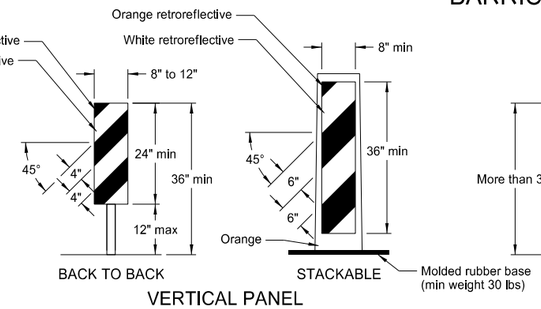

VERTICAL PANEL

Markings for vertical panels shall be alternating orange and white retroreflective stripes, sloping downward in the direction vehicular traffic is to pass. Retroreflective sheeting shall be placed on both sides of panel and shall have a minimum of 270 square inches of retroreflective area facing vehicular traffic. Where the height of the retroreflective material on the vertical panel is 36 inches or more, a stripe width of 6 inches shall be used.

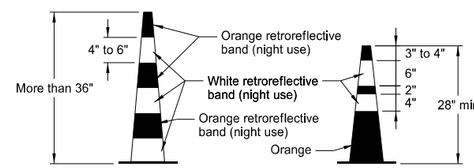

TRAFFIC CONE

Retroreflectorization of cones more than 36" in height shall be provided by alternating orange and white retroreflective stripes. Each cone shall have a minimum of two orange and two white stripes with the top stripe being orange. Any nonretroreflectorized space between the orange and white stripes shall not exceed 3" wide.

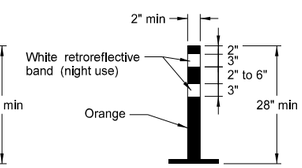

TUBULAR MARKER

Retroreflectorization of tubular markers more than 42" in height shall be provided by alternating four 4" to 6" wide orange and white stripes with the top stripe being orange.

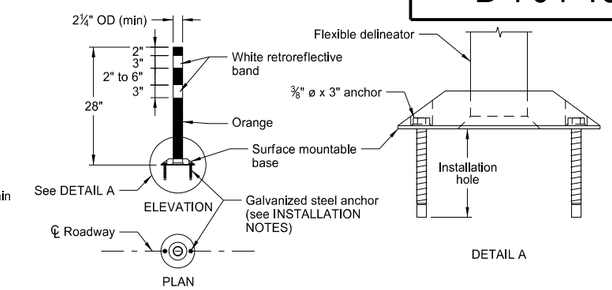

FLEXIBLE DELINEATOR

INSTALLATION NOTES:

1. Drill installation holes to diameter and depth as required by manufacturer's specifications.
2. For removal, remove anchors and fill installation hole with an epoxy designed to bond to pavement surface.
3. In lieu of bolted down base, the contractor may use an 8" x 8" butyl pad or hot melt butyl. Butyl shall be removed as close as possible to pavement surface.

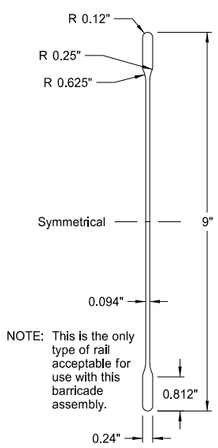

NOTE: This is the only type of rail acceptable for use with this barricade assembly.

BARRICADE BLADE DETAIL

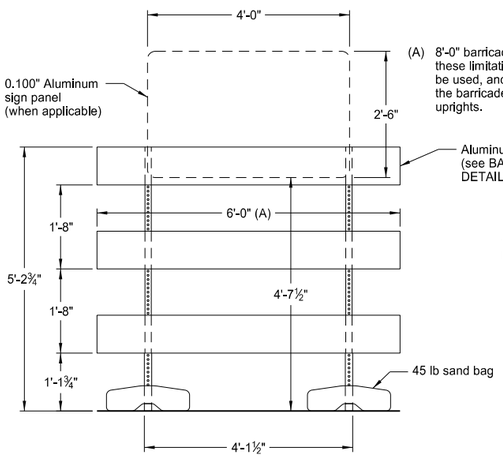

(A) 8'-0" barricade rails may be used with these limitations: 1) no sign panel can be used, and 2) no more than 1'-0" of the barricade rail can extend past the uprights.

ELEVATION VIEW

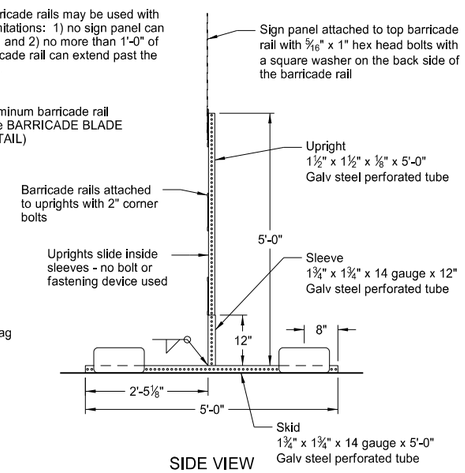

SIDE VIEW

BARRICADE ASSEMBLY DETAIL
(Aluminum Barricade Rails)

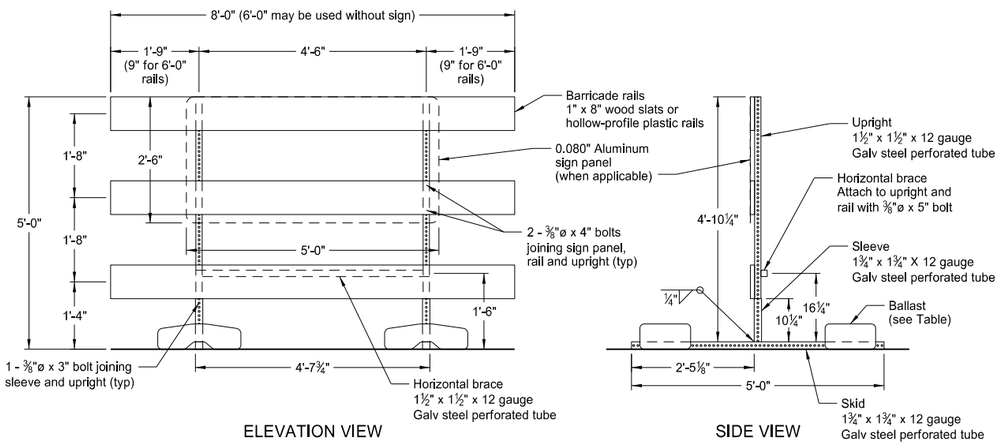

ELEVATION VIEW

SIDE VIEW

BARRICADE ASSEMBLY DETAIL
(Wood or Plastic Rails)

NOTE: Markings for barricades shall be alternating orange and white retroreflective stripes, sloping downward in the direction traffic is to pass. Retroreflective sheeting shall be placed on both sides of the rails and shall have a minimum of 270 square inches of visible retroreflective area facing vehicular traffic. When the barricade length is less than 36", the rail stripe width shall be 4".

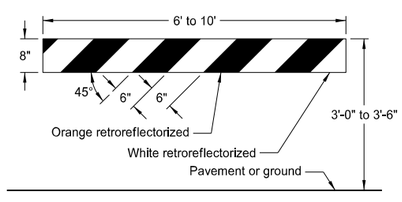

TYPE I BARRICADE

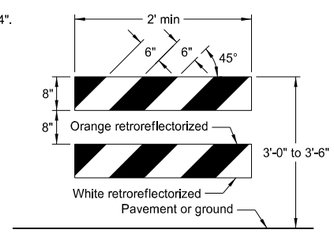

TYPE II BARRICADE

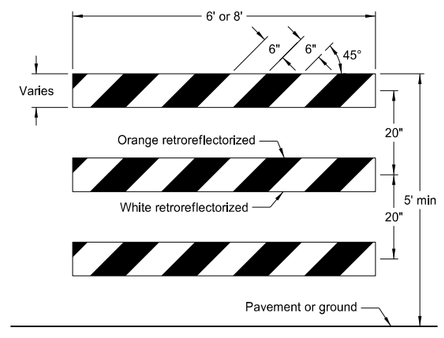

TYPE III BARRICADE

BARRICADE RAIL DETAILS

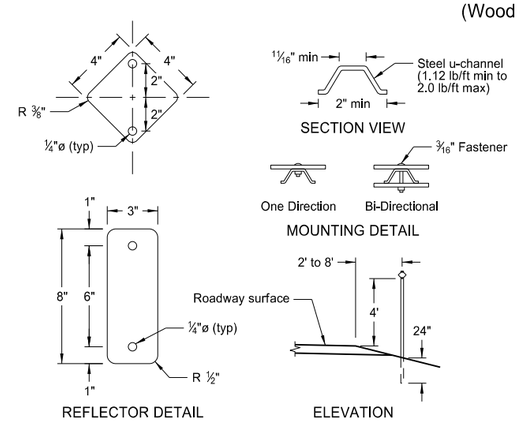

DELINEATORS

MINIMUM BALLAST
(For each side of barricade support)

Without Sign	4 - 25 lb sandbags
With Sign	6 - 25 lb sandbags

Note: The number of sandbags are based on a wind speed of 55 MPH. The sandbags are assumed to be placed at or near the ends of the skids.

NORTH DAKOTA DEPARTMENT OF TRANSPORTATION	
10-3-13	
REVISIONS	
DATE	CHANGE

This document was originally issued and sealed by Roger Weigel, Registration Number PE- 2930, on 10/3/13 and the original document is stored at the North Dakota Department of Transportation

CONSTRUCTION SIGN PUNCHING AND MOUNTING DETAILS

D-704-14

Note: Signs placed in sections with curb shall have a minimum horizontal clearance of 2' from the face of the curb to the near edge of the sign.

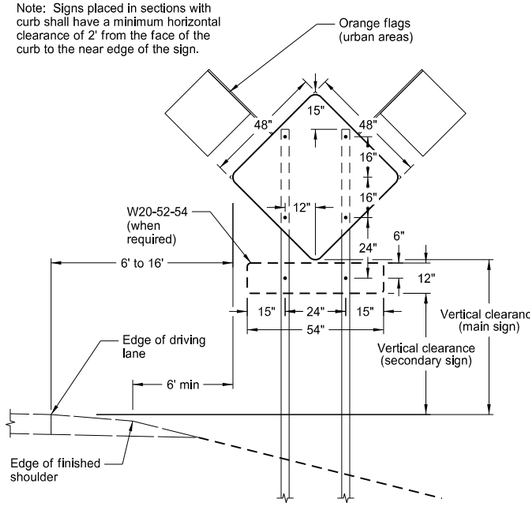

TYPICAL SECTION
(48" x 48" diamond warning sign shown)

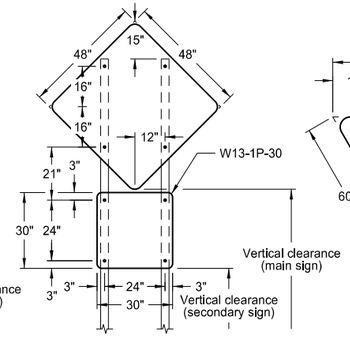

48" x 48" DIAMOND SIGN
(with 30" x 30" secondary sign)

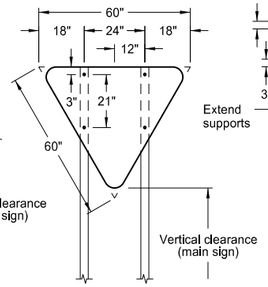

R1-2-60 - YIELD SIGN

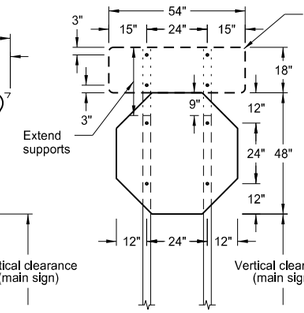

R1-1-48 - STOP SIGN
(with R6-1-54 sign as required)

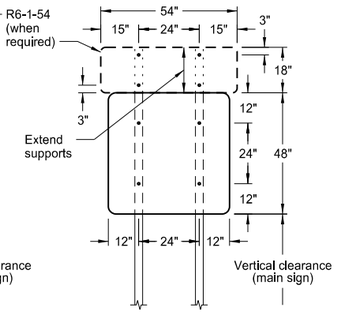

48" x 48" SIGN
(with R6-1-54 sign as required)

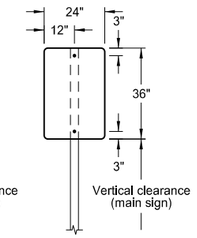

24" x 36" SIGN

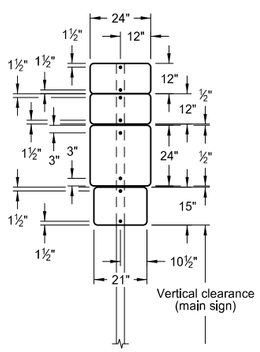

24" x 24"
ROUTE MARKER
ASSEMBLY

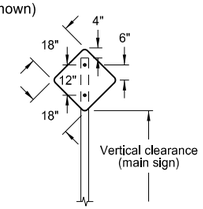

18" x 18"
DIAMOND SIGN

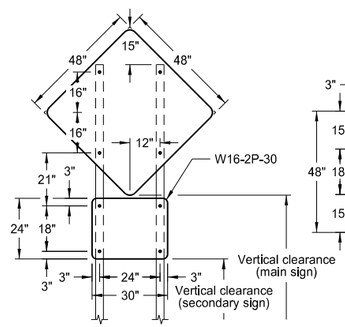

48" x 48" DIAMOND SIGN
(with 30" x 24" secondary sign)

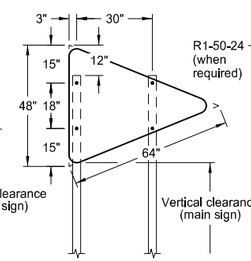

W14-3-64 - PENNANT SIGN

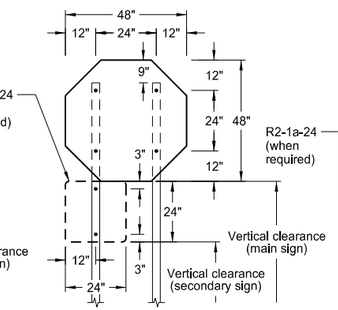

R1-1-48 - STOP SIGN
(with R1-50-24 sign as required)

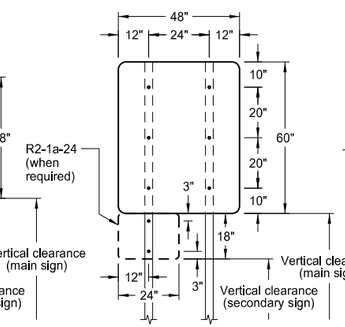

48" x 48" SIGN
(with R2-1a-24 sign as required)

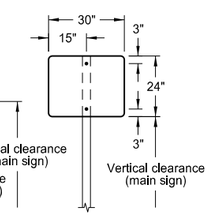

30" x 24" SIGN

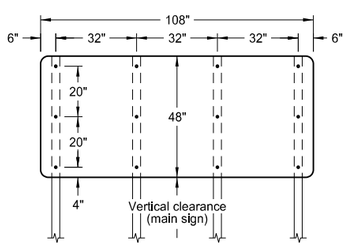

108" x 48" SIGN

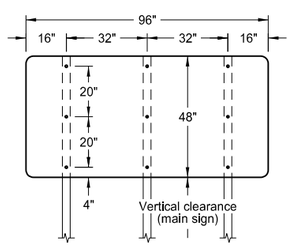

96" x 48" SIGN

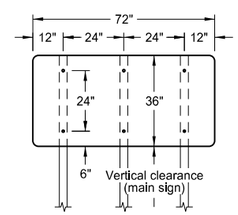

72" x 36" SIGN

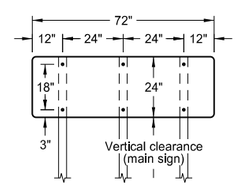

72" x 24" SIGN

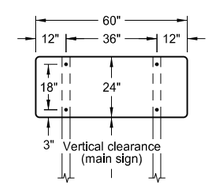

60" x 24" SIGN

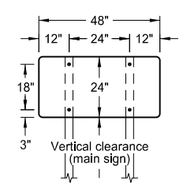

48" x 24" SIGN

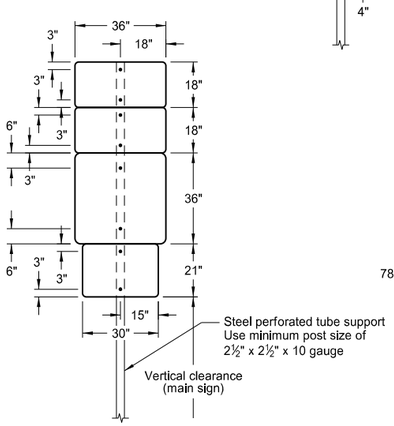

36" x 36"
ROUTE MARKER
ASSEMBLY

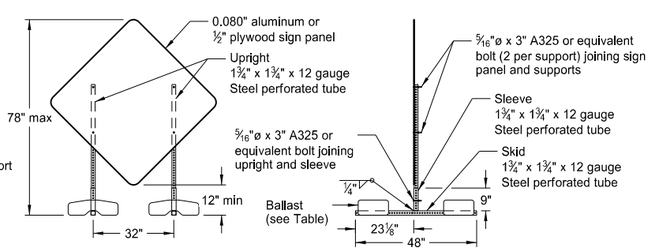

PORTABLE SIGN SUPPORT
LOW-MOUNTING HEIGHT

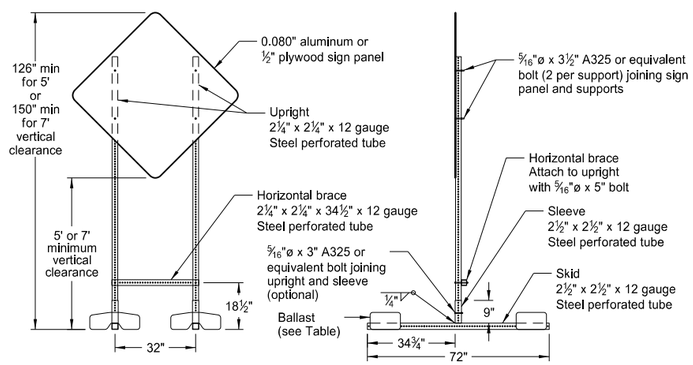

PORTABLE SIGN SUPPORT
HIGH-MOUNTING HEIGHT

NOTES:

1. Sign Supports: Supports shall be galvanized or painted. Minimum post sizes are 2.5 lb/ft u-channel or 2" x 2" x 12 gauge steel perforated tube, except where noted. When installing signs on u-channel, the minimum post size for assemblies containing a secondary sign is 3.0 lb/ft. Post sizes are based on a wind speed of 55 MPH.

   Signs over 50 square feet should be installed on 2½" x 2½" perforated tube supports as a minimum.

   Guy wires shall not be attached to sign supports. Wind beams may be attached to u-posts behind the sign panels.

2. Sign Panels: Provide sign panels made of 0.100" aluminum, ½" plywood, or other approved material, except where noted. All holes to be punched round for ⅜" bolts.

3. Alternate Messages: The signs that have alternate messages may have these alternate messages placed on a reflectorized plate (without a border) and installed and removed as required. (i.e. "Left" and "Right" message on a lane closure sign)

4. Route Marker Auxiliary Signs: Provide route marker auxiliary signs, such as the cardinal direction and directional arrows, with a background and legend that match the route marker they are used with:

   Interstate - white legend on blue background
   Interstate Business Loop - white legend on green background
   US and State - black legend on white background
   County - yellow legend on blue background

5. Vertical Clearance: Install signs with a vertical clearance of 5'-0" (see TYPICAL SECTION.) In areas where parking or pedestrian movements are likely or the view of the sign may be obstructed, install signs with a vertical clearance of 7'-0" from the top of the curb or from the near edge of the driving lane in absence of a curb.

   The vertical clearance to secondary signs is 1'-0" less than the vertical clearance as stated above.

   Large signs having an area exceeding 50 square feet shall have a minimum clearance of 7'-0" from the ground at the post.

6. Portable Signs: Provide portable signs that meet the vertical clearance as stated above. Use portable signs when it is necessary to place signs within the pavement surface.

   When portable signs are used for 5 days or less, low-mounting height (minimum 12" vertical clearance) sign supports may be used as long as the view of the sign is not obstructed. Time delays caused by unforseen circumstances, such as equipment breakdown, rain, subgrade failures, etc., will not accrue towards the 5 day period. The R9-8 through R9-11a series, W1-6 through W1-8 series, M4-10, and E5-1 may be used for longer than 5 days.

   Signs mounted to the portable sign supports shown in the LOW-MOUNTING HEIGHT and HIGH-MOUNTING HEIGHT Details shall have a maximum surface area of 16 square feet.

MINIMUM BALLAST
(For each side of sign support base)

Sign Panel Mounting Height (ft)	Number of 25 lb sandbags for 4' x 4' sign panel
1'	6
5'	8
7'	10

Note: The number of sandbags are based on a wind speed of 55 MPH. The sandbags are assumed to be placed at or near the ends of the skids.

NORTH DAKOTA DEPARTMENT OF TRANSPORTATION	
10-4-13	
REVISIONS	
DATE	CHANGE
11-14-13	Revised Note 6.

This document was originally issued and sealed by Roger Weigel, Registration Number PE- 2930, on 11/14/13 and the original document is stored at the North Dakota Department of Transportation

ROAD CLOSURE LAYOUTS

D-704-15

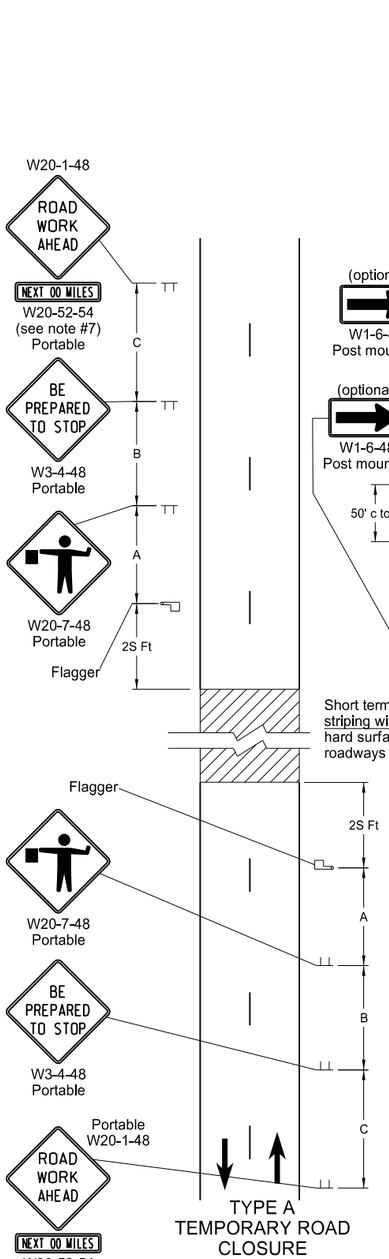

TYPE A
TEMPORARY ROAD CLOSURE

When a pilot car is used, there is no need to provide G20-55-96 or R2-1a-24 sign on the project as the pilot car will control the speed.

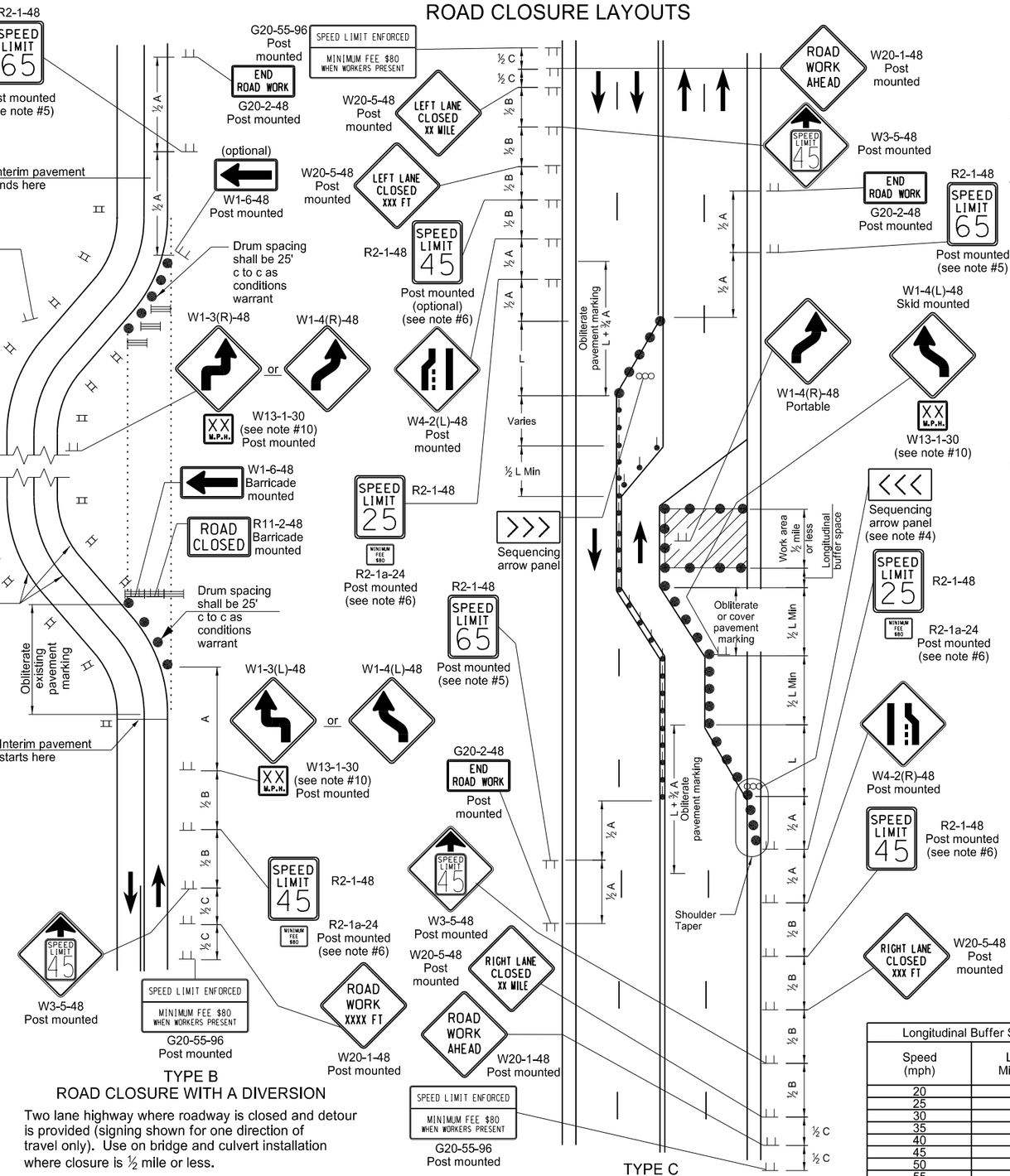

TYPE B
ROAD CLOSURE WITH A DIVERSION

Two lane highway where roadway is closed and detour is provided (signing shown for one direction of travel only). Use on bridge and culvert installation where closure is ½ mile or less.

TYPE C
HALF ROAD CLOSURE ON A MULTI-LANE, HIGH SPEED HIGHWAY

4 lane undivided highway with half the roadway closed.

Notes

1. Variables
   S = Numerical value of speed limit or 85th percentile.
   W = The width of taper.
   L = Minimum length of taper, or S x W for freeways, expressways, and all other roads with speeds of 45 mph or greater, or W x $S^2/60$ for urban, residential, and other streets with speeds of 40 mph or less.
2. Barricades placed on roadway shall be on a moveable assembly. Signs placed on roadway shall be placed on skid mounted assemblies.
3. Delineator drums, barricades or cones used for tapering traffic shall be spaced at the dimension "S". Delineator drums or cones used for tangents shall be spaced at 2 times dimension "S".
4. Sequencing Arrow Panels
   Panels should normally be placed at the beginning of the taper. Where shoulder width does not provide sufficient room, the panel should be moved closer to the work area so that it can be placed on the roadway surface. See Shoulder Closure Standard Drawing.
   Type A shall be used on roadways with slow moving traffic speeds and low volume (25 mph or less and 750 ADT or less).
   Type B shall be used on roadways with moderate traffic speeds and volumes (40 mph or less and 5000 ADT or less).
   Type C shall be used on roadways with high traffic speeds and volumes (over 40 mph or over 5000 ADT).
5. The speed limit shall be re-established. The exact speed limit shall be determined in the field, dependent on location and conditions.
6. The reduced speed limit shall be determined dependent on the in place speed limit before construction. The speed limit reduction should not exceed 10 mph below the existing speed limit, unless the design speed of the work zone feature has been reduced below the 10 mph. In this case, the speed limit reduction shall not exceed 30 MPH. Where speed limits are to be reduced more than 30 MPH, a second speed limit sign shall be installed with the desired speed reduction but shall not exceed 30 MPH. The second speed limit sign shall be placed at ½ B.
7. Use when work area is 1 mile or longer.
8. When warning signs are used in urban areas and the signs are not portable, flags shall be installed. The flags shall be 24 inches square, mounted perpendicular to the edges of the diamond sign, and at such a distance above the edge so that when the flag is limp it will not touch the sign. Rural areas will not require flags.
9. Existing speed limit signs within a reduced speed zone shall be covered.
10. Where necessary, safe speed to be determined by the Engineer.
11. The contractor has the option of using portable sign supports in lieu of post mounted signs in accordance with the NDDOT Standard Specifications.
12. G20-55-96 sign is not required if this standard is part of other traffic control layouts, or the work is less than 15 days.

ADVANCE WARNING SIGN SPACING

Road Type	Distance Between Signs Min. (ft)		
	A	B	C
Urban - Low Speed (30 mph or less)	150	150	150
Urban - Low Speed (over 30 to 40 mph)	280	280	280
Urban - High Speed (over 40 mph to 50 mph)	360	360	360
Rural - High Speed (over 50 mph to 65 mph)	720	720	720
Urban Expressway and Freeway (55 mph to 60 mph)	850	1350	2200
Rural Expressway and Freeway (70 mph to 75 mph)	1000	1500	2640
Interstate/4-Lane Divided (Maintenance and Surveying)	750	1000	1500

KEY

	Type III barricade		Work area
	Sign		Flagger
	Delineator drum		Sequencing arrow panel
	Tubular markers		Vertical panels back to back

Longitudinal Buffer Space

Speed (mph)	Length Min (feet)
20	115
25	155
30	200
35	250
40	305
45	360
50	425
55	495
60	570
65	645
70	730
75	820

NORTH DAKOTA DEPARTMENT OF TRANSPORTATION

9-27-13

REVISIONS

DATE	CHANGE

This document was originally issued and sealed by Roger Weigel Registration Number PE- 2930, on 09/27/13 and the original document is stored at the North Dakota Department of Transportation

SIGN LAYOUT FOR ONE LANE CLOSURE
INTERSTATE SYSTEM

D-704-35

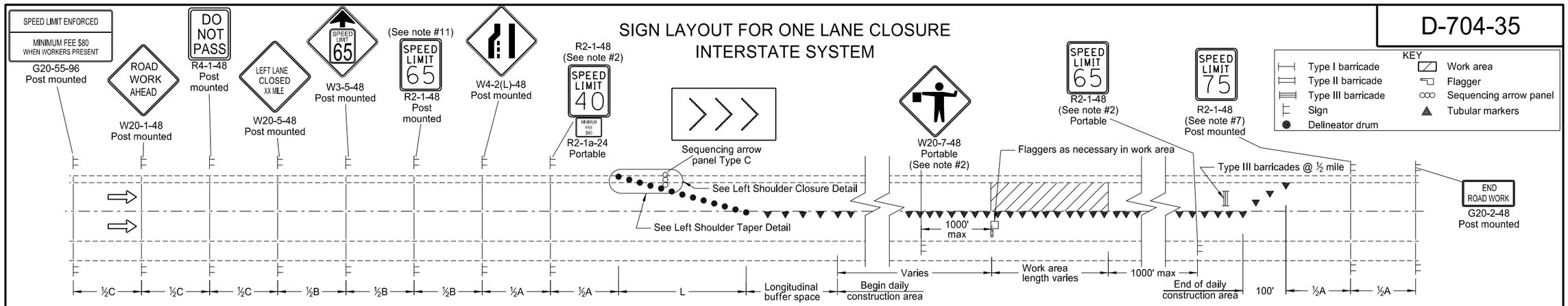

KEY

- Type I barricade
- Type II barricade
- Type III barricade
- Sign
- Delineator drum
- Work area
- Flagger
- Sequencing arrow panel
- Tubular markers

LEFT LANE CLOSED
WORKERS IN WORK AREA

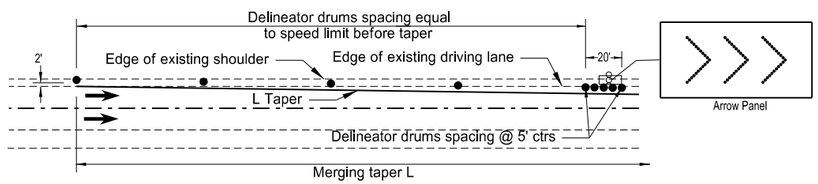

LEFT SHOULDER TAPER DETAIL

ADVANCE WARNING SIGN SPACING			
Road Type	Distance Between Signs Min (ft)		
	A	B	C
Rural - High Speed (over 50 mph to 65 mph)	720	720	720
Urban Expressway and Freeway (55 mph to 60 mph)	850	1350	2200
Rural Expressway and Freeway (70 mph to 75 mph)	1000	1500	2640
Interstate/4-Lane Divided (Maintenance and Surveying)	750	1000	1500

Longitudinal Buffer Space	
Speed (mph)*	Length Min (feet)
20	115
25	155
30	200
35	250
40	305
45	360
50	425
55	495
60	570
65	645
70	730
75	820

*Posted speed, off-peak 85th percentile speed prior to work starting, or the anticipated operating speed in mph.

Notes:

1. Advance signs for flagging shall be installed when flaggers are flagging.
2. The advanced flagger sign and the speed limit signs shall be moved as the work area moves through the construction zone. When the work area is not visible from the flagger, the flagger station shall be placed so the work area is visible. The 65 mph speed limit and the 40 mph speed limit sign shall be spaced at ½A in advance of the flagger sign. The 65 mph speed limit sign shall also be moved. Upon completion of the work day or when workers are not present, the 65 mph speed limit, 40 mph speed limit, and the Minimum Fee $80 signs shall be covered or removed.
3. RAMPS: When the work area encompasses an entrance ramp, the ramp shall be controlled by installing a 40 mph speed limit sign and covering any existing yield sign. Install new yield sign as necessary. When the main line 40 mph speed zone is moved past the ramp, the ramp speed limit sign shall be removed.
4. Variables:
   S=Numerical value of speed limit or 85th percentile
   W=The width of taper.
   L=Minimum length of taper, or SxW for freeways, expressways, and all other roads with speeds of 45 mph or greater,
   or WxSxS/60 for urban, residential, and other streets with speeds of 40 mph or less.
5. Delineator drums, used for tapering traffic shall be spaced at the dimension "S". Tubular markers used for tangents shall be spaced at 2 times dimension "S".
6. Sequencing arrow panels should normally be placed at the beginning of the taper. Where shoulder width does not provide sufficient room, the panel should be moved closer to the work area so that it can be placed on the roadway surface.
   Type C shall be used on roadways with high traffic speeds and volumes (over 40 mph or 5000 ADT or greater).
7. The speed limit shall be re-established. The exact speed limit shall be determined in the field, dependent on location and conditions.
8. Existing speed limit signs within a reduced speed zone shall be covered.
9. Obliterated or covered pavement marking shall be paid for as Obliteration of Pavement Marking. The covering shall be approved by the engineer.
10. When warning signs are used in urban areas and the signs are not portable, flags shall be installed. The flags shall be 24 inches square, mounted perpendicular to the edges of the diamond sign, and at such a distance above the edge so that when the flag is limp it will not touch the sign. Rural areas will not require flags.
11. The reduced speed limit shall be determined dependent on the in place speed limit before construction. The speed limit reduction should not exceed 10 mph below the existing speed limit, unless the design speed of the work zone feature has been reduced below the 10 mph. In this case, the speed limit reduction shall not exceed 30 mph. Where speed limits are to be reduced more than 30 mph, a second speed limit sign shall be installed with the desired speed reduction, but shall not exceed 30 mph. The second speed limit sign shall be placed at ½B.
12. The contractor has the option of using portable sign supports in lieu of post mounted signs in accordance with NDDOT Standard Specifications.

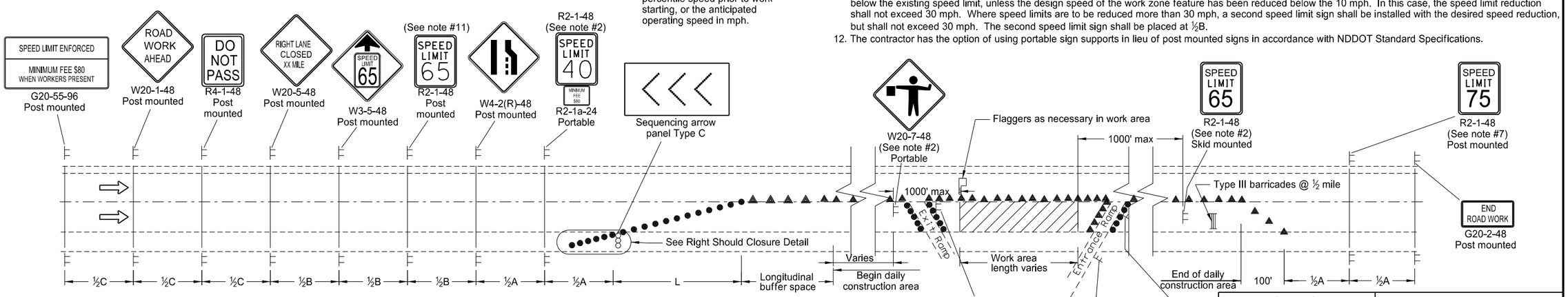

RIGHT LANE CLOSED
WORKERS IN WORK AREA

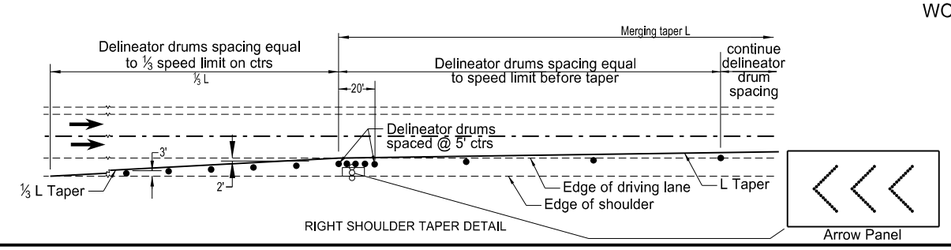

RIGHT SHOULDER TAPER DETAIL

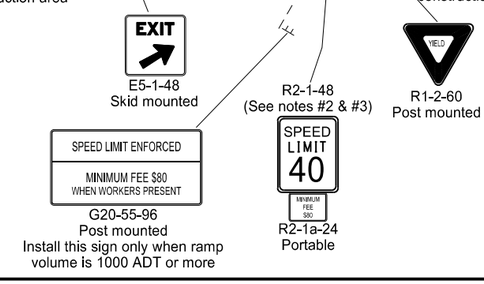

NORTH DAKOTA DEPARTMENT OF TRANSPORTATION	
9-7-2012	
REVISIONS	
DATE	CHANGE
6/23/2014	Revised Note 12

This document was originally issued and sealed by Roger Weigel, Registration Number PE- 2930, on 6/23/14 and the original document is stored at the North Dakota Department of Transportation

PORTABLE SIGN SUPPORT ASSEMBLY

D-704-50

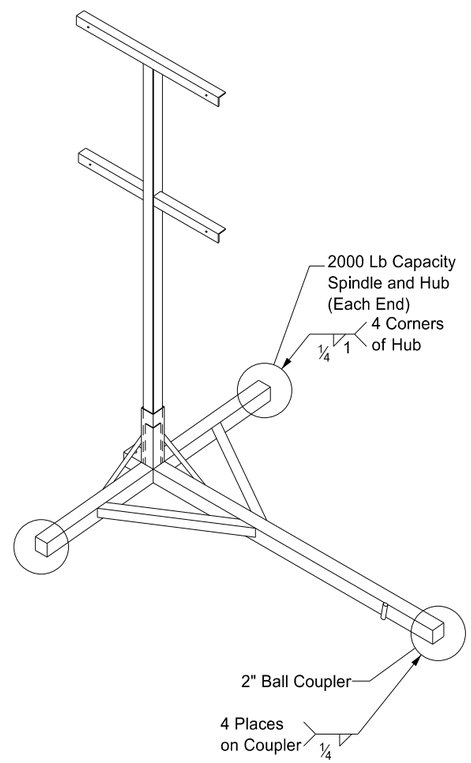

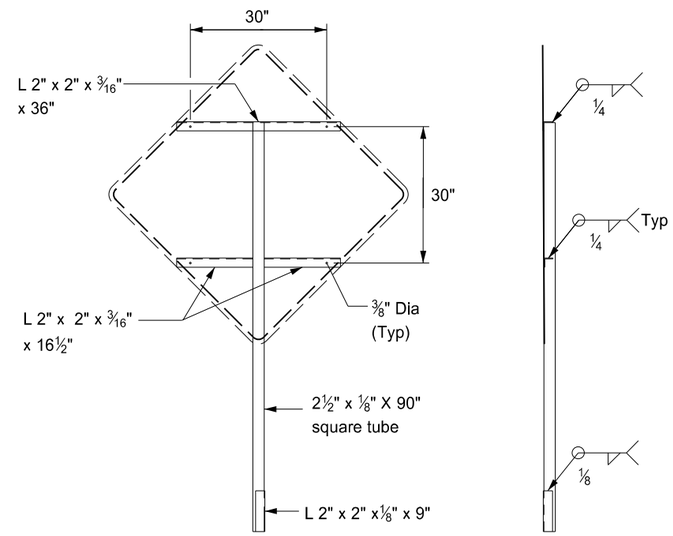

FRONT

RIGHT

SIGN SUPPORT

Notes:

1. The maximum weight of the assembly is 250 pounds.
2. Use a 14" wheel and tire.
3. Automotive and equipment axle assemblies may not be used for trailer-mounted sign supports.
4. Other NCHRP 350 crash tested assemblies are acceptable.

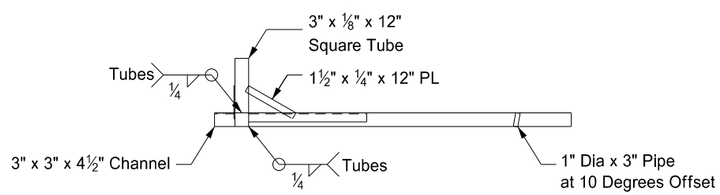

FRONT

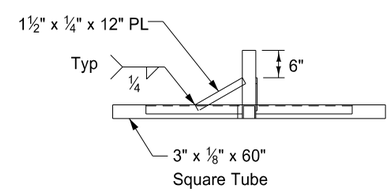

RIGHT

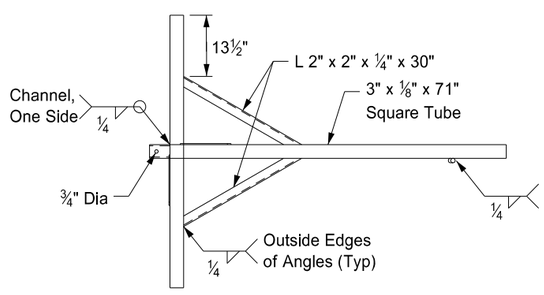

TOP

TRAILER

NORTH DAKOTA DEPARTMENT OF TRANSPORTATION	
11-23-10	
REVISIONS	
DATE	CHANGE

This document was originally issued and sealed by Roger Weigel Registration Number PE- 2930 , on 11/23/10 and the original document is stored at the North Dakota Department of Transportation