STATE	PROJECT NO.	SHEET NO.
ND	IM-8-029(004)062	

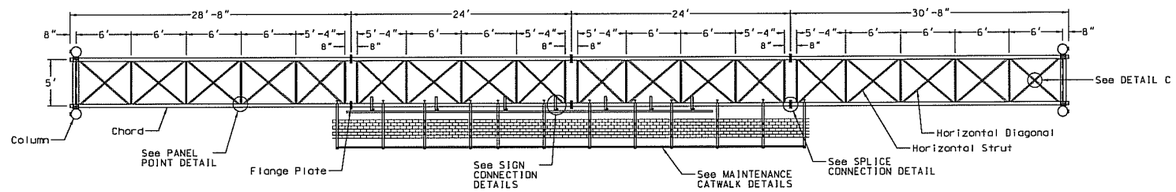

PLAN

Note: Interior Diagonals shall be located at alternating panel points and be omitted entirely at end panel points.

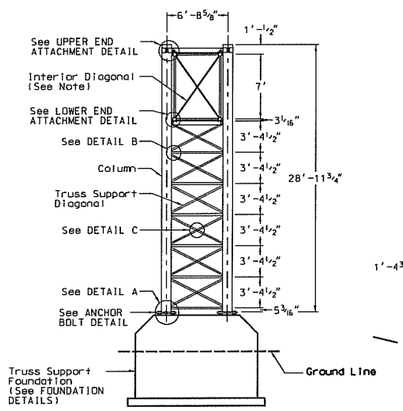

END VIEW

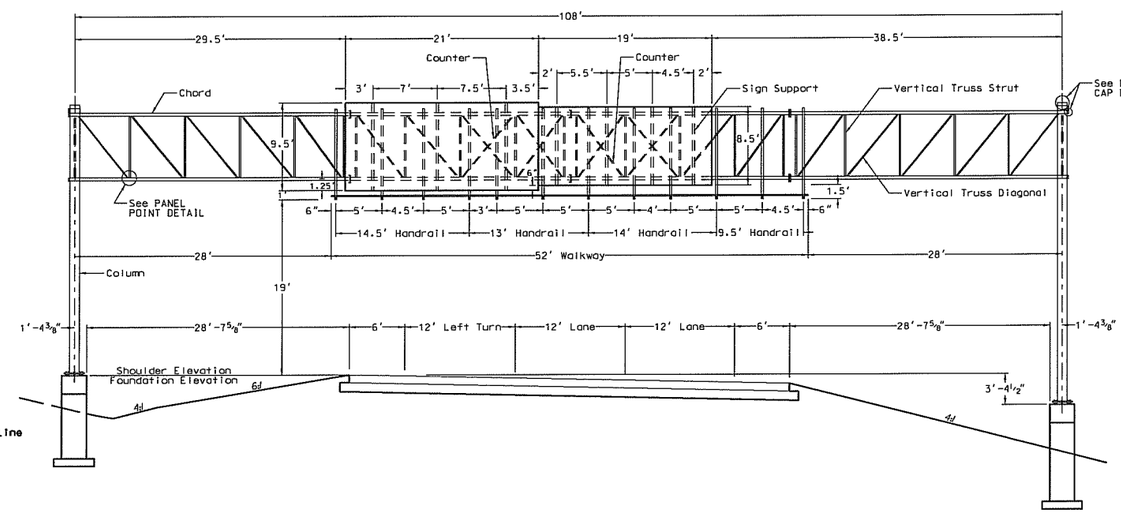

ELEVATION

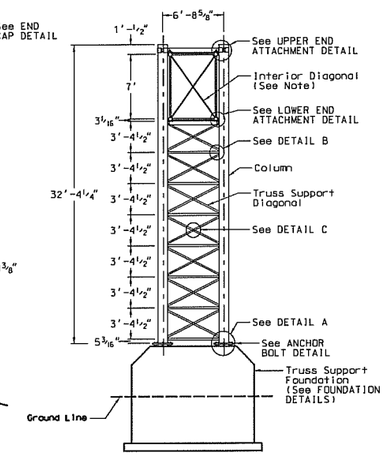

END VIEW

		TRUSS MEMBERS							SUPPORT MEMBERS		
		CHORDS	VERTICAL STRUTS	HORIZONTAL STRUTS	VERTICAL DIAGONALS	HORIZONTAL DIAGONALS	INTERIOR DIAGONALS	COUNTERS	VERTICAL COLUMNS	SUPPORT STRUTS	SUPPORT DIAGONALS
STEEL	Standard Pipe	3 1/2" (9.11)							12" (49.56)		
	XS Pipe		1 1/2" (3.63)	1 1/4" (3.00)	1 1/4" (3.00)					2" (5.02)	
	Flat Bars					1 3/4" x 1/4" (1.49)	1" x 1/4" (0.85)	1 3/4" X 3/16" (1.12)			2" x 5/16" (2.13)

Base Plate Thickness: 1 1/2"
Anchor Bolts: 8 EA /Column @ 1 1/4" Dia.
Anchor Bolt Length: 2'-6" plus 4" bend

Flange Plate Thickness: 1 1/4"
Flange Splice Bolts: 6 EA/Flange @ 3/4" Dia.
Camber: 2.296"

Truss Overhead Sign Structure

Sta 7+66 - Southeast Ramp

13th Ave S Interchange
Fargo, ND

STATE	PROJECT NO.	SHEET NO.
ND	IM-8-029(004)062	

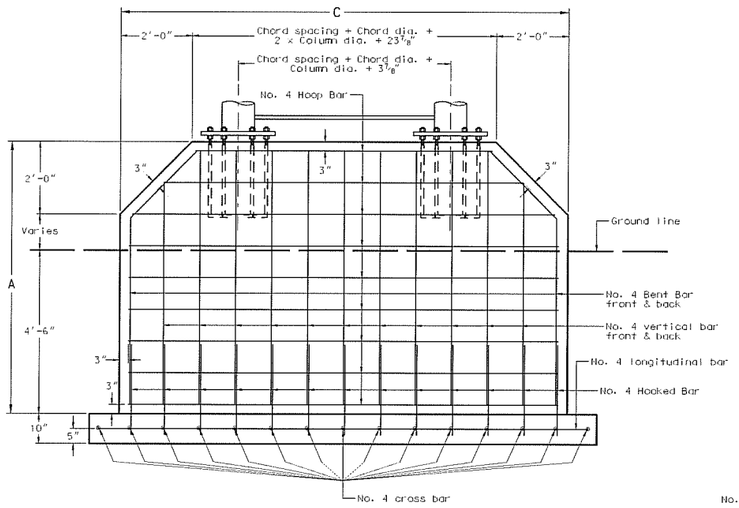

ELEVATION

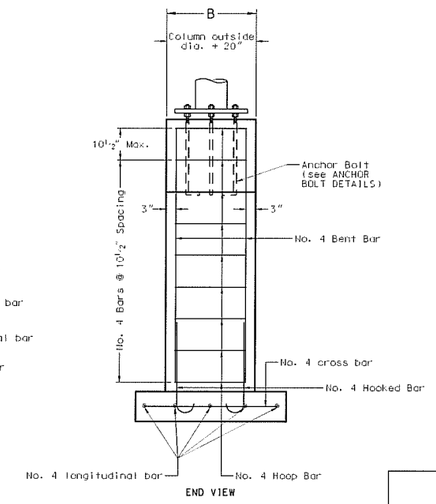

END VIEW

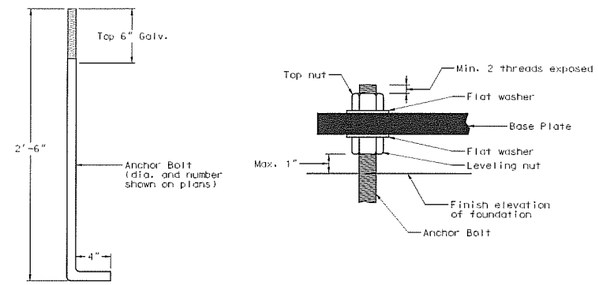

ANCHOR BOLT DETAILS

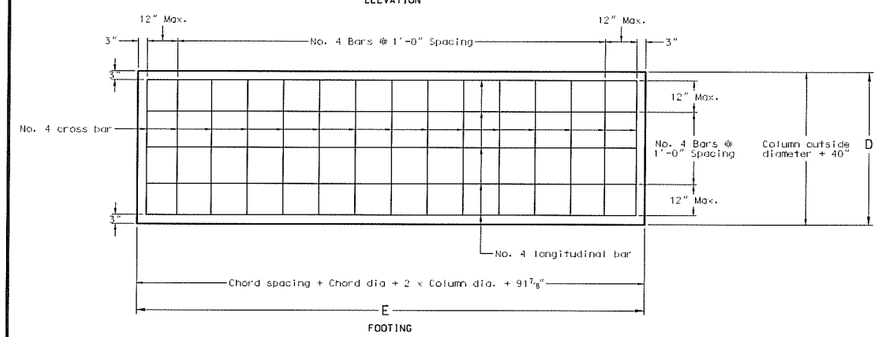

FOOTING

FOUNDATION & REINFORCING DETAILS

LOCATION	A	B	C	D	E
Sta 3321+01 rt	10'-0"	2'-8 3/4"	13'-5 3/8"	4'-4 3/4"	15'-1 3/8"
Sta 3360+98 rt mdn	6'-6"	2'-8 3/4"	14'-5 7/8"	4'-4 3/4"	16'-1 7/8"
Sta 3360+98 rt	8'-0"	2'-8 3/4"	14'-5 7/8"	4'-4 3/4"	16'-1 7/8"
Sta 3373+46 rt mdn	17'-6"	2'-8 3/4"	14'-6 15/16"	4'-4 3/4"	16'-2 15/16"
Sta 3373+46 rt	11'-6"	2'-8 3/4"	14'-6 15/16"	4'-4 3/4"	16'-2 15/16"
Sta 7+66 lt SER	9'-0"	2'-8 3/4"	13'-5 3/8"	4'-4 3/4"	15'-1 3/8"
Sta 7+66 rt SER	10'-6"	2'-8 3/4"	13'-5 3/8"	4'-4 3/4"	15'-1 3/8"
Sta 16+96 rt SER	9'-0"	2'-8 3/4"	14'-6 15/16"	4'-4 3/4"	16'-2 15/16"
Sta 2+78 lt NER	7'-6"	2'-8 3/4"	13'-5 3/8"	4'-4 3/4"	15'-1 3/8"
Sta 2+78 rt NER	8'-6"	2'-8 3/4"	13'-5 3/8"	4'-4 3/4"	15'-1 3/8"
Sta 3434+90 rt mdn	8'-6"	2'-8 3/4"	13'-5 3/8"	4'-4 3/4"	15'-1 3/8"
Sta 3434+90 rt	9'-6"	2'-8 3/4"	13'-5 3/8"	4'-4 3/4"	15'-1 3/8"

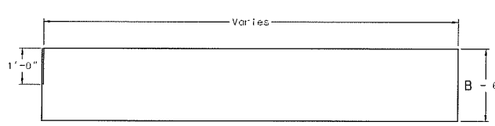

HOOP BAR DETAIL

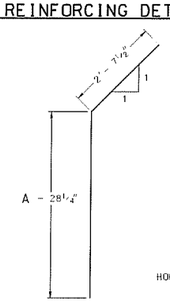

BENT BAR DETAIL

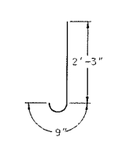

HOOKED BAR DETAIL

REINFORCING BAR DETAILS

Foundation Details for Truss Overhead Sign Structure

Sta 3321+01 rt - I-29 NB
Sta 3360+98 rt - I-29 NB
Sta 3373+46 rt - I-29 NB
Sta 7+66 - SE Ramp - 13th Ave S. Int.
Sta 16+96 - SE Ramp - 13th Ave S. Int.
Sta 2+78 - NE Ramp - 13th Ave S. Int.
Sta 3434+90 rt - I-29 NB

Fargo, ND