DESIGN DATA				
Traffic	Average Daily			
Current 2013	Pass: 3,255	Trucks: 2,095	Total: 5,350	
Forecast 2033	Pass: 5,340	Trucks: 3,645	Total: 8,985	
Clear Zone Distance: 34		Design Speed: 65 mph		
Minimum Sight Dist. for Stopping: 645		Bridges: N/A		
Sight Dist. for No Passing Zone: 1100				
Pavement Design Life 20 (years)				
Design Accumulated One-way N/A ESALs: N/A				

STATE	PROJECT NO.	PCN	SECTION NO.	SHEET NO.
ND	SER-7-085(095)127	20408	1	1

JOB # 47
NORTH DAKOTA
DEPARTMENT OF TRANSPORTATION

SER-7-085(095)127

McKenzie County
1 Mile North Of Long X Bridge

Jacked or Bored Pipe/Auxiliary Lane
Erosion Repairs

GOVERNING SPECIFICATIONS:
2014 Standard Specifications adopted by the North Dakota Department of Transportation and the Supplemental Specifications effective on the date the project is advertised.

PROJECT NUMBER \ DESCRIPTION	NET MILES	GROSS MILES
SER-7-085(095)127	0.95 Miles	0.95 Miles

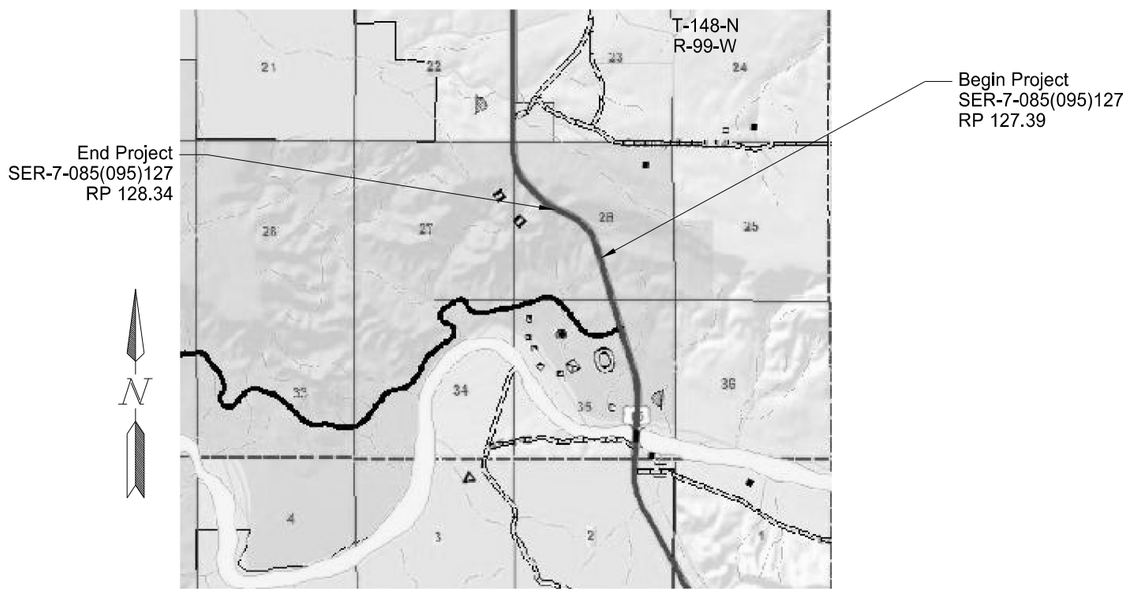

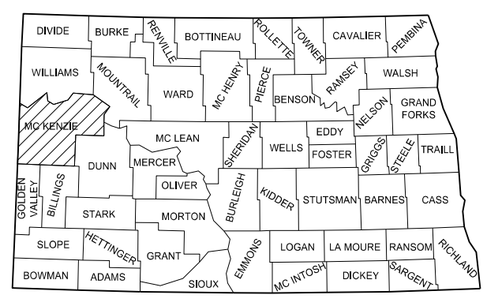

STATE COUNTY MAP

DESIGNERS

Leon Eckroth /s/

APPROVED DATE 8/27/2014

Roger Weigel /s/
OFFICE OF PROJECT DEVELOPMENT
ND DEPARTMENT OF TRANSPORTATION

I hereby certify that the attached plans were prepared by me or under my direct supervision and that I am a duly registered professional engineer under the laws of the state of ND.

APPROVED DATE 8/27/2014

James Douglas Rath /s/
NDDOT Design Division

This document was originally issued and sealed by James Douglas Rath Registration Number PE- 4288, on 8/27/2014 and the original document is stored at the North Dakota Department of Transportation

TABLE OF CONTENTS

STATE	PROJECT NO.	SECTION NO.	SHEET NO.
ND	SER-7-085(095)127	2	1

INDEX OF DRAWINGS

SECTION	SHEET	DESCRIPTION
1	1	Title Sheet
2	1	Table of Contents
4	1	Scope of Work
6	1 - 3	Notes
	4	Environmental Commitments
8	1 - 2	Quantities
10	1	Basis of Estimate
20	1 - 4	General Details
30	1	Typical Sections
50	1	Inlet & Manhole Summary
51	1	Allowable Pipe List
55	1 - 3	Drainage Layouts
60	1 - 5	Plan & Profile
75	1-3	Wetland Impacts
76	1-3	Temporary Erosion Control
77	1-3	Permanent Erosion Control
100	1 - 2	Work Zone Traffic Control
110	1	Signing
200	1 - 90	Cross Sections

LIST OF STANDARD DRAWINGS

STANDARD NO.	DESCRIPTION
D-101-1, 2, 3	NDDOT Abbreviations
D-101-10	NDDOT Utility Company Abbreviations
D-101-20,21	Linestyles
D-101-30, 31, 32	Symbols
D-255-2	Erosion And Siltation Control - Erosion Control Blanket Installation
D-256-1	Erosion And Siltation Controls
D-260-1	Erosion And Siltation Controls - Silt Fence
D-261-1	Erosion Control Fiber Roll Placement Details
D-704-5	Contractor Sign Detail
D-704-7	Breakaway Systems For Construction Zone Signs - Perforated Tube
D-704-8	Breakaway Systems For Construction Zone Signs - U-Channel Post
D-704-9	Construction Sign Details - Terminal And Guide Signs
D-704-10	Construction Sign Detail - Regulatory Signs
D-704-11	Construction Sign Detail - Warning Signs
D-704-12	Shoulder Closure Tapers
D-704-13	Barricade And Channelizing Device Details
D-704-14	Construction Sign Punching And Mounting Details
D-704-19	Road Closure And Lane Closure On A Two Way Road Layouts
D-704-22	Construction Truck And Temporary Detour Layouts
D-704-24	Shoulder Closures And Bridge Painting Layouts
D-704-26	Miscellaneous Sign Layouts
D-704-27	Traffic Control Plan For Moving Operations
D-704-50	Portable Sign Support Assembly
D-708-6	Erosion And Siltation Controls - Median Or Ditch Inlet Protection
D-714-1	Reinforced Concrete Pipe Culvert And End Section
D-714-4	Round Corrugated Steel Pipe Culverts And End Sections
D-714-16	Jacked And Bored Pipe
D-714-22	Concrete Pipe Or Precast Concrete Box Culvert Ties
D-714-27	Pipe Excavation And Installation Detail For Longitudinal Mainline Pipe Or Pipe Not Under The Roadway
D-722-5	Manhole Details
D-754-23	Perforated Tube Assembly Details
D-754-24	Mounting Details Perforated Tube
D-754-24A	Breakaway Coupler System For Perforated Tubes
D-754-25	Mounting Details Perforated Tube
D-762-4	Pavement Marking

Special Provisions

03(14)	Temporary Erosion and Sediment BMP
41(14)	Woven Wire Fence
5019(14)	Permits and Environmental Considerations

STATE	PROJECT NO.	SECTION NO.	SHEET NO.
ND	SER-7-085(095)127	4	1

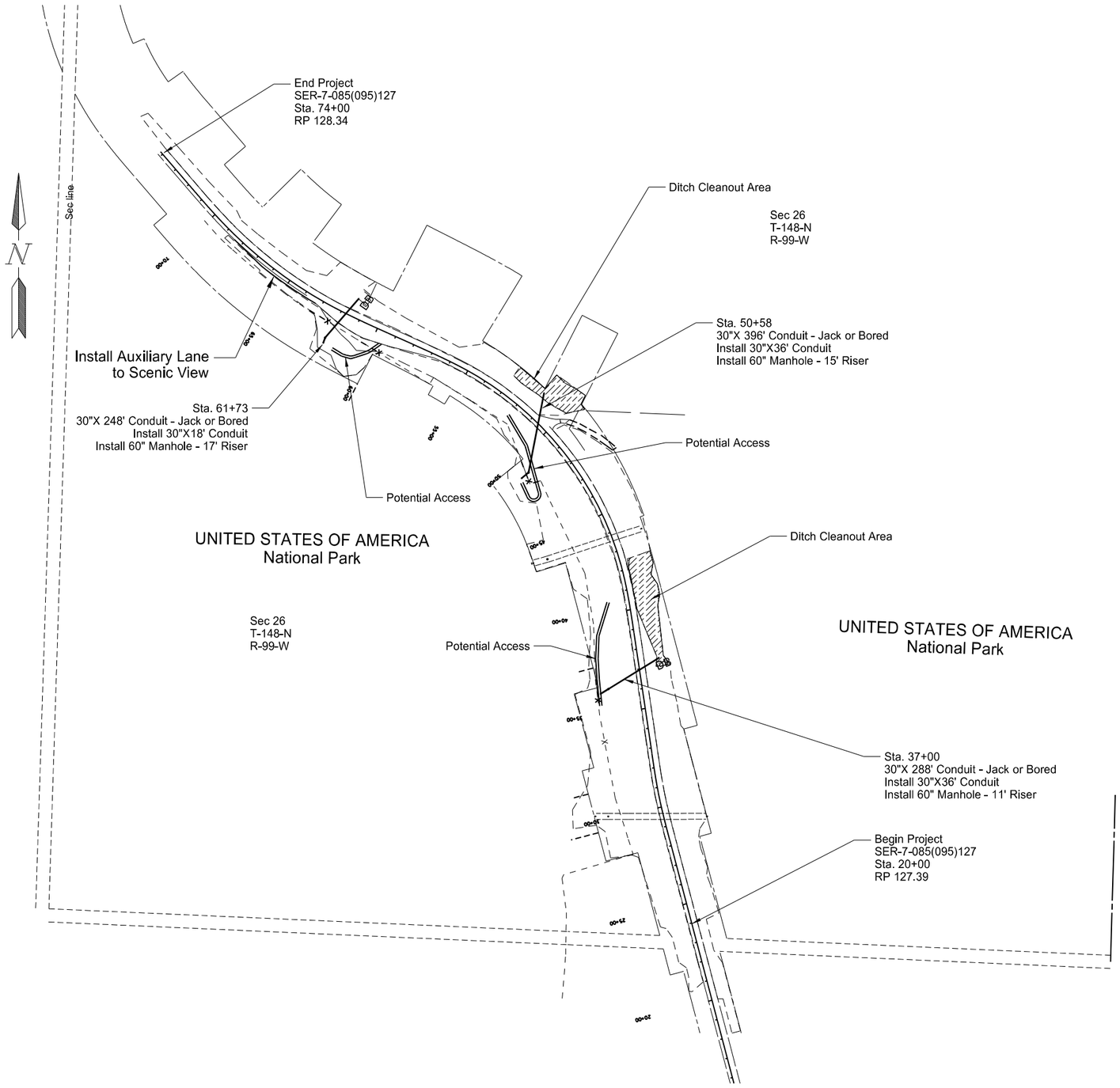

This document was originally issued and sealed by Brian J. Rosin Registration Number PE- 2928, on 8/27/2014 and the original document is stored at the North Dakota Department of Transportation

Scope of Work

Slope Repairs/Jacked or Bored Pipe

1 Mile North of Long-X Bridge

NOTES

GENERAL NOTES

100-P01 SUPPLEMENTAL DESIGN DATA: Supplemental design data consisting of electronic survey files or models used for GPS controlled equipment are not available and will not be created for this project.

100-P02 PROTECTION OF EXISTING FACILITIES: The contractor shall exercise care in his construction operations to ensure that trees, shrubs, grasses, fences and signs outside of the construction limits are not disturbed. The construction limits include the area required to match existing grades. Any damage caused by the contractor shall be repaired by the contractor at the contractor's expense.

202-P01 REMOVAL OF BITUMINOUS SURFACING: The “Removal of Bituminous Surfacing” is based on the existing typical sections shown in section 30. This includes the area of existing bituminous surfacing, existing base, and any other material needed to be removed for the auxiliary turn lane installation and shoulder widening. All material removed shall become the property of the contractor and shall be paid for by the unit price bid for “Removal of Bituminous Surfacing”.

203-P01 HAUL: No average haul has been computed for this project.

203-P02 COMMON EXCAVATION-TYPE C: Approximately 15,214 CY of material will be excavated during potential access construction, ditch cleanout excavation or pipe excavation at pipe inlets or outlets as shown on the plans and cross sections. All costs associated with any excavated material, construction of ditch blocks, intercepting ditches, excavation or embankment at pipe inlets or outlets, and the removal of any temporary approaches shall not be bid separately but included in the unit price bid for “Common Excavation-Type C”.

251-P01 TEMPORARY COVER CROP: The following temporary seed mixture shall be used for all newly and previously disturbed embankment areas, except for areas with TRM Type 1. All temporary seeding shall be drilled in and covered with straw mulch for the winter.

Barley	50.0 PLS lbs/ac
Annual Rye grass (Italian)	10.0 PLS lbs/ac.
Turnip (Pasja)	1.0 PLS lbs/ac
Forage Radish	2.0 PLS lbs/ac
Annual clover (Persian)	1.0 PLS lbs/ac

Fertilize cover crop with 80 lbs/ac of 28-29-0 to promote root development. Fertilizer to be placed with the cover crop seed (not spread on surface).

Cover crop seeded immediately after shaping and prior to straw mulch placement

This document was originally issued and sealed by Brian J. Rosin, Registration Number PE-2928, on 8/27/2014 and the original document is stored at the North Dakota Department of Transportation.

NOTES

251-P02 SEEDING CLASS III: The following seed mixture shall be used for all newly and previously disturbed embankment areas. It shall be drilled in and either covered with TRM Type 1 or the Hydraulic Mulch. Except for the areas covered by TRM Type 1, all permanent seeding will be done between May 1 – June 15, 2015. Seed sources will probably need to come from multiple vendors. ½ Seed to be drilled and ½ applied in conjunction with flexible growth medium.

Species*	Variety	PLS Lbs./ac in mixture
Blue Grama	Bad River	1.00
Green Needlegrass	Lordom	1.20
Sideoats Grama	Killdeer or Pierre	1.8
Western Wheatgrass	Rodan or Rosana	4.00
Slender Wheatgrass	Pryor or Revenue	5.0
Prairie Junegrass	Common	0.15
Little Bluestem	Badlands	0.80
Fourwing Saltbush, Dewinged	Wytana	0.60
Inland Saltgrass		1.4
Rubber Rabbitbush		0.10
Alkali sacaton		0.5
Canada Wildrye	Mandan	3.3
	Total	19.85

411-P01 MILLING PAVEMENT SURFACE: All milled material shall become the property of the contractor.

430-P01 SUPERPAVE FAA 45: The hot bituminous pavement shall be paver laid in three equal lifts.

The estimated quantity of Prime is 124 Gal, Tack is 43 Gal and PG 64-28 Asphalt Cement is 16 Ton. These items shall not be bid separately but included in the unit price bid for “Superpave FAA 45”.

704-P01 TRAFFIC CONTROL: The traffic control for the construction of this project shall consist of one lane road closures and flagging. Traffic control devices shall comply with the following Standard Drawings.

D-704-5, Contractor sign as applicable.

D-704-7, 8, 9, 10, 11, 13, and 14 as applicable.

D-704-19, Type F: For temporary lane closures. Sign layout for temporary lane closure is based on length of auxiliary lane and taper.

D-704-22, Layouts Type K and L: For construction trucks hauling materials.

D-704-24, Layouts Type R and U: For Jacking or Boring Culverts, shoulder preparation, seeding and mulching. Tubular Markers will be used in-place of the cones as shown on the Standard Drawing.

D-704-26, Layouts Type BB, CC, EE, GG and Z.

D-704-27, Pavement marking operations.

D-704-50: Portable Sign Support Assembly.

This document was originally issued and sealed by Brian J. Rosin, Registration Number PE-2928, on 8/27/2014 and the original document is stored at the North Dakota Department of Transportation.

NOTES

714-P01 PIPE CONDUIT 30” - JACKED OR BORED: For these instances the boring or jacking will be allowed to start on the high or upstream end to allow for better access.

722-P01 MANHOLES: Manholes shall be installed at locations shown in Section 55 in the plans. The manhole risers shall be furnished without steps. Several manholes are to be installed at locations within areas of high fills. All manholes on this project have a minimum 4-foot riser. The bottom of the manhole shall be filled with concrete up to the elevation that will accommodate the lowest invert elevation. The manholes shall comply with the requirements of ASTM C 857 and ASTM C 858.

All costs for furnishing and installing the manholes complete with access castings and covers, and adjusting rings, where required, shall be included in the prices bid for the items “Manhole 60 IN”.

752-P01 FENCE: Any fence removed within the park boundary’s shall be replaced with a 7 foot high woven wire fence with brown treated wood line posts as shown in Section 20. All costs associated with the removal and installation of any new fence shall not be bid separately but included in the unit price bid for “Fence Remove and Reset”.

752-P02 TEMPORARY FENCE: The temporary fence within the park boundaries shall be 6’ high with five strands of barb wire and steel posts. The pay item “Temporary Fence” shall include all costs to provide, place, maintain, and remove the temporary fence.

754-P01 RESET SIGN PANEL AND RESET SIGN SUPPORT: The Engineer will measure the item “Reset Sign Panel” by the number of locations a sign or sign assembly has been reset. The Engineer will measure the item “Reset Sign Support” by each leg of a sign support that has been reset.

This document was originally issued and sealed by Brian J. Rosin, Registration Number PE-2928, on 8/27/2014 and the original document is stored at the North Dakota Department of Transportation.

ENVIRONMENTAL COMMITMENTS

ENVIRONMENTAL COMMITMENTS: The North Dakota Department of Transportation and the Federal Highway Administration have made several environmental commitments to various agencies and the public to secure approval of this project. The environmental commitments are as follows:

COMMITMENT NO. 1: Unavoidable impacts to wetlands will be mitigated onsite, adjacent to the project, or at a NDDOT approved mitigation site or bank. Approximately 0.00 *natural/jurisdictional*, 0.00 *natural/non-jurisdictional*, 0.00 *artificial/jurisdictional*, and 0.00 *artificial/non-jurisdictional* acres of wetlands will be impacted permanently, and 0.00 acres will be impacted temporarily. 0.00 acres of *Potential Other Waters* will also be permanently impacted.

ACTION TAKEN/REQUIRED: 0.00 acres of permanent impacts to wetlands will require mitigation.

Wetland Number	Location	LONG / LAT (Dec. Deg.)	Cowardin Classification	Wetland Type	Wetland Size (acres)	Wetland Feature	USACE Jurisdictional Wetlands*	Impacts to Wetlands	
								Temp.	Perm.
1	Sec. 26, T148N, R99W	-103.255405 W 47.603980 N	PEMC	Basin	0.19	Natural	X	0.00	0.00
TOTALS					**0.19**			**0.00**	**0.00**

POTENTIAL OTHER WATERS									
Number	Location	LONG / LAT (Dec. Deg.)	Type	Size		Feature	USACE Jurisdictional Wetlands*	Impacts to Potential Other Waters	
				Acres	Linear Feet			Acres	Linear Feet
1	Sec. 26, T148N, R99W	-103.263486 W 47.609519 N	Dry Channel	0.08	182	Natural	X	0.00	0.00
2	Sec. 26, T148N, R99W	-103.262266 W 47.609056 N	Dry Channel	0.11	282	Natural	X	0.00	0.00
3	Sec. 26, T148N, R99W	-103.260298 W 47.607871 N	Dry Channel	0.13	309	Natural	X	0.00	0.00
4	Sec. 26, T148N, R99W	-103.260056 W 47.607283 N	Dry Channel	0.05	207	Natural	X	0.00	0.00
TOTALS				**0.37**	**980**			**0.00**	**0.00**

* A wetland Jurisdictional Determination was issued by the USACE on 05/10/2011; NWO-2011-00880-BIS.

ESTIMATE OF QUANTITIES

STATE	PROJECT NO.	SECTION NO.	SHEET NO.
ND	SER-7-085(095)127	8	1

SPEC	CODE	ITEM DESCRIPTION	UNIT	MAINLINE	TOTAL
103	0100	CONTRACT BOND	L SUM	0.75	0.75
201	0330	CLEARING & GRUBBING	L SUM	0.75	0.75
202	0132	REMOVAL OF BITUMINOUS SURFACING	SY	1,230	1,230
202	0153	SAW BITUMINOUS SURFACING-FULL DEPTH	LF	530	530
203	0103	COMMON EXCAVATION-TYPE C	CY	15,214	15,214
216	0100	WATER	M GAL	200	200
230	0110	RESHAPING INSLOPE	MILE	2	2
251	0300	SEEDING CLASS III	ACRE	34	34
251	2000	TEMPORARY COVER CROP	ACRE	34	34
251	3000	FERTILIZER	ACRE	34	34
253	0101	STRAW MULCH	ACRE	54	54
253	0201	HYDRAULIC MULCH	ACRE	43	43
255	0201	TRM TYPE 1	SY	15,080	15,080
256	0200	RIPRAP GRADE II	CY	60	60
260	0200	SILT FENCE SUPPORTED	LF	660	660
260	0201	REMOVE SILT FENCE SUPPORTED	LF	660	660
261	0112	FIBER ROLLS 12IN	LF	7,810	7,810
261	0113	REMOVE FIBER ROLLS 12IN	LF	3,905	3,905
302	0100	SALVAGED BASE COURSE	TON	680	680
411	0105	MILLING PAVEMENT SURFACE	SY	1,010	1,010
430	0045	SUPERPAVE FAA 45	TON	262	262
702	0100	MOBILIZATION	L SUM	0.75	0.75
704	0100	FLAGGING	MHR	300	300
704	1000	TRAFFIC CONTROL SIGNS	UNIT	2,208	2,208
704	1052	TYPE III BARRICADE	EA	3	3
704	1060	DELINEATOR DRUMS	EA	20	20
704	1067	TUBULAR MARKERS	EA	34	34
706	0400	FIELD OFFICE	EA	1	1
709	0155	GEOSYNTHETIC MATERIAL TYPE RR	SY	105	105
714	4110	PIPE CONDUIT 30IN	LF	90	90
714	4166	PIPE CONDUIT 30IN-JACKED OR BORED	LF	932	932
722	0110	MANHOLE 60IN	EA	3	3
722	1110	MANHOLE RISER 60IN	LF	43	43

ESTIMATE OF QUANTITIES

STATE	PROJECT NO.	SECTION NO.	SHEET NO.
ND	SER-7-085(095)127	8	2

SPEC	CODE	ITEM DESCRIPTION	UNIT	MAINLINE	TOTAL
752	0905	TEMPORARY FENCE	LF	600	600
752	0922	FENCE REMOVE & RESET	LF	600	600
754	0592	RESET SIGN PANEL	EA	1	1
754	0593	RESET SIGN SUPPORT	EA	2	2
762	1104	PVMT MK PAINTED 4IN LINE	LF	1,403	1,403
762	1108	PVMT MK PAINTED 8IN LINE	LF	324	324

STATE	PROJECT NO.	SECTION NO.	SHEET NO.
ND	SER-7-085(095)127	10	1

		Southbound right Turn Lane		Sta. 36+00 Pipe Jacking		Sta. 50+00 Pipe Jacking		Sta. 62+00 Pipe Jacking			
Material	Unit	Width (ft)	Quantity Per Location	Width (ft)	Quantity Per Location	Width (ft)	Quantity Per Location	Width (ft)	Quantity Per Location		TOTALS
Removal of Bituminous Surfacing	SY	4	1230								1230
Milling - 2" Depth	SY	5	1010								1010
Saw Cut - Full Depth	LF		530								530
Common Excavation - Type C	CY		0		6605		7885		724		15214
Salvaged Base Course@ 1.875 Ton/CY	Ton	12	680								680
*Prime Coat @ 0.25 Gal/SY	Gal	12	124								124
*Tack Coat @ 0.05 Gal/SY (Middle Lift)	Gal	12	18								18
*Tack Coat @ 0.05 Gal/SY (Top Lift)	Gal	16	25								25
*PG 64-28 Asphalt Cement at 6.0%	Ton		16								16
Hot Bituminous Pavement Superpave FFA 45 @ 2 Ton/CY	Ton	12	262								262
Silt Fence Supported	LF				60		300		300		660
TRM	SY				3890		4395		6795		15080
12" Fiber Rolls - Temporary	LF		0		1185		2040		680		3905
12" Fiber Rolls - Permanent	LF		0		1185		2040		680		3905

*Estimated Quantities

This document was originally issued and sealed by Brian J. Rosin Registration Number PE- 2928, on 8/27/2014 and the original document is stored at the North Dakota Department of Transportation

Basis of Estimate

Slope Repairs/Jacked or Bored Pipe

1 Mile North of Long-X Bridge

STATE	PROJECT NO.	SECTION NO.	SHEET NO.
ND	SER-7-085(095)127	20	1

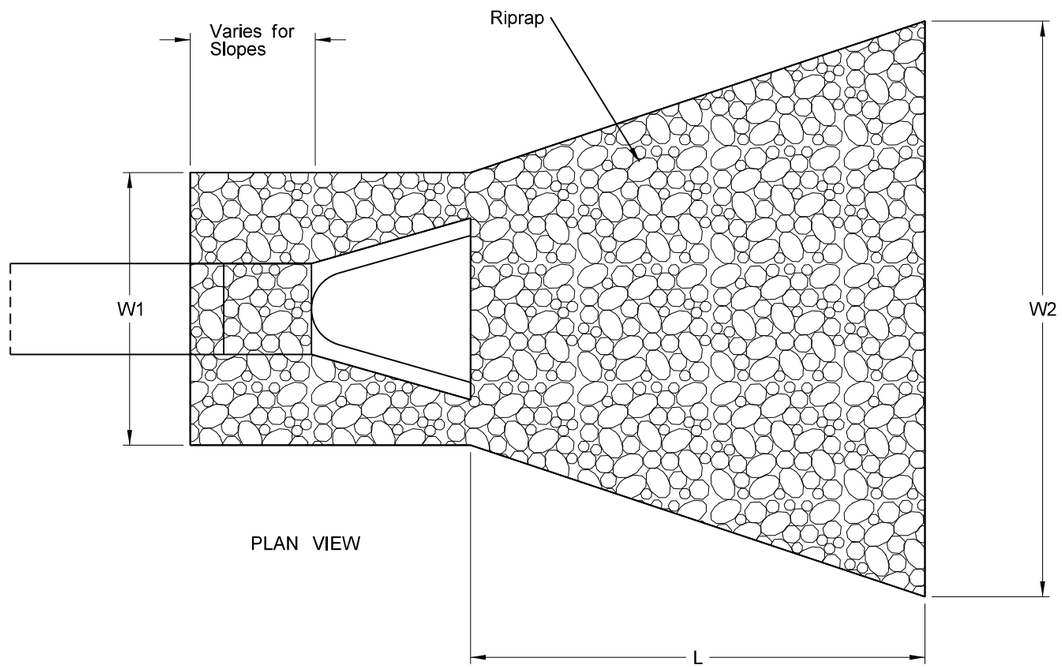

PLAN VIEW

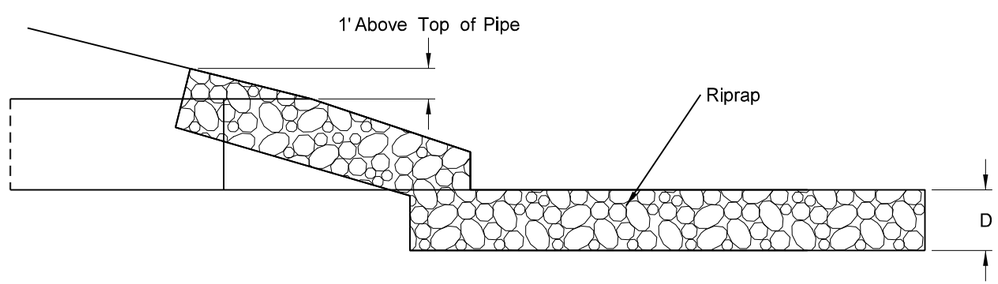

PROFILE VIEW

Culvert Diameter Inches	RR Fabric SY	Riprap CY
30"	35	20

Culvert Diameter Inches	L Feet	W1 Feet	W2 Feet	Riprap Depth, D Inches	Riprap Grade
30"	10'	7.5'	14'	20"	II

This document was originally issued and sealed by Brian J. Rosin Registration Number PE- 2928, on 8/27/2014 and the original document is stored at the North Dakota Department of Transportation

RipRap Detail

Culvert End Sections

Slope Repairs/Jacked or Bored Pipe

1 Mile North of Long-X Bridge

STATE	PROJECT NO.	SECTION NO.	SHEET NO.
ND	SER-7-085(095)127	20	2

POST SPACING MAY NOT EXCEED 16'-0" ON CENTER, SHORTEN SPACING AS NEEDED FOR PROPER SUPPORT. ANCHORS PLACED AS NEAR TO MIDPOINTS OF GRADE BREAK AS PRACTICAL.

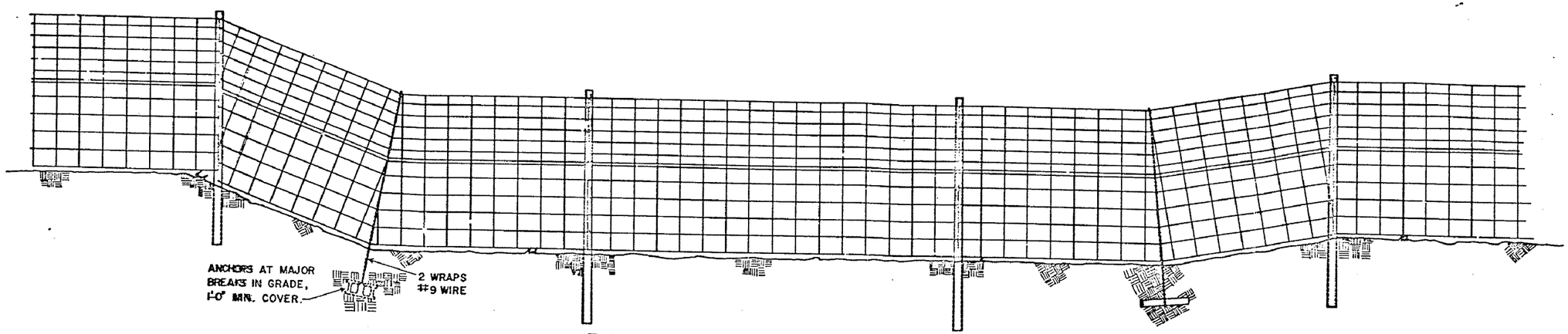

TYPICAL LINE FENCE AT MAJOR GRADE BREAK

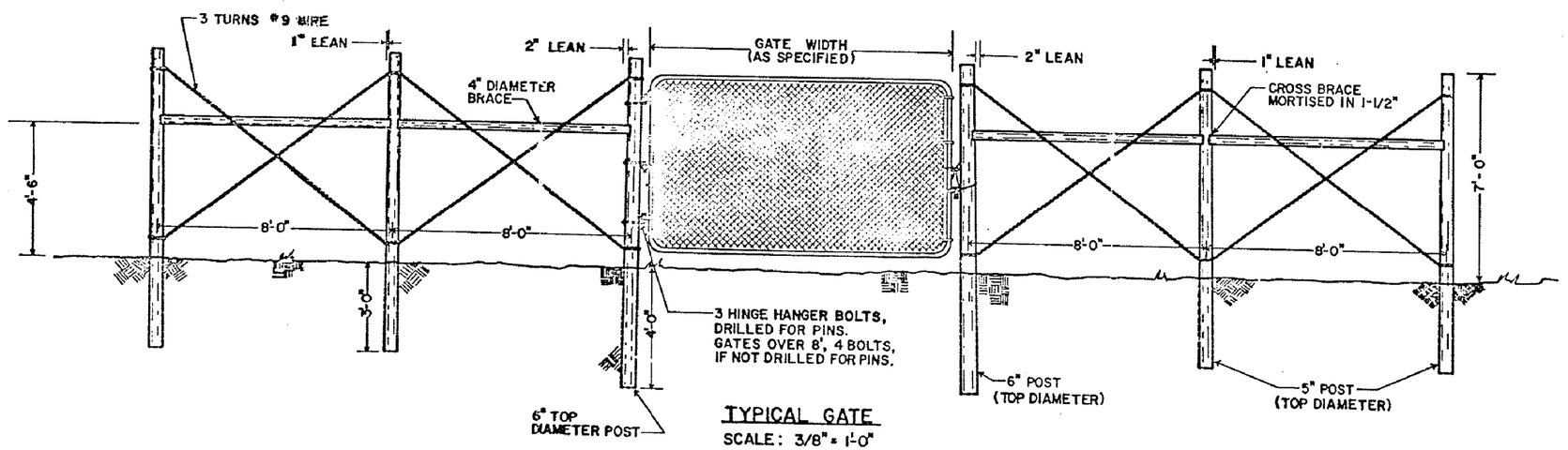

TYPICAL GATE
SCALE: 3/8" = 1'-0"

This document was originally issued and sealed by Brian J. Rosin Registration Number PE- 2928, on 8/27/2014 and the original document is stored at the North Dakota Department of Transportation

Woven Wire Fence Details

Slope Repairs/Jacked or Bored Pipe

1 Mile North of Long-X Bridge

STATE	PROJECT NO.	SECTION NO.	SHEET NO.
ND	SER-7-085(095)127	20	3

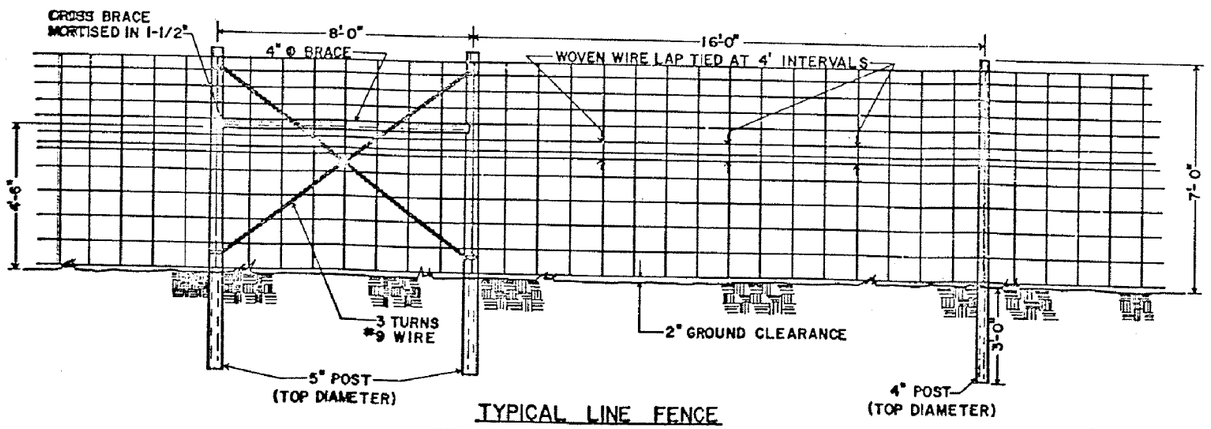

TYPICAL LINE FENCE
BRACE PANELS SPACED AT 320'
SCALE: 3/8" = 1'-0"

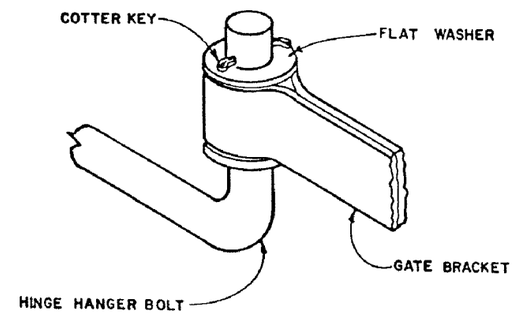

HINGE MOUNTING ALTERNATE
NO SCALE

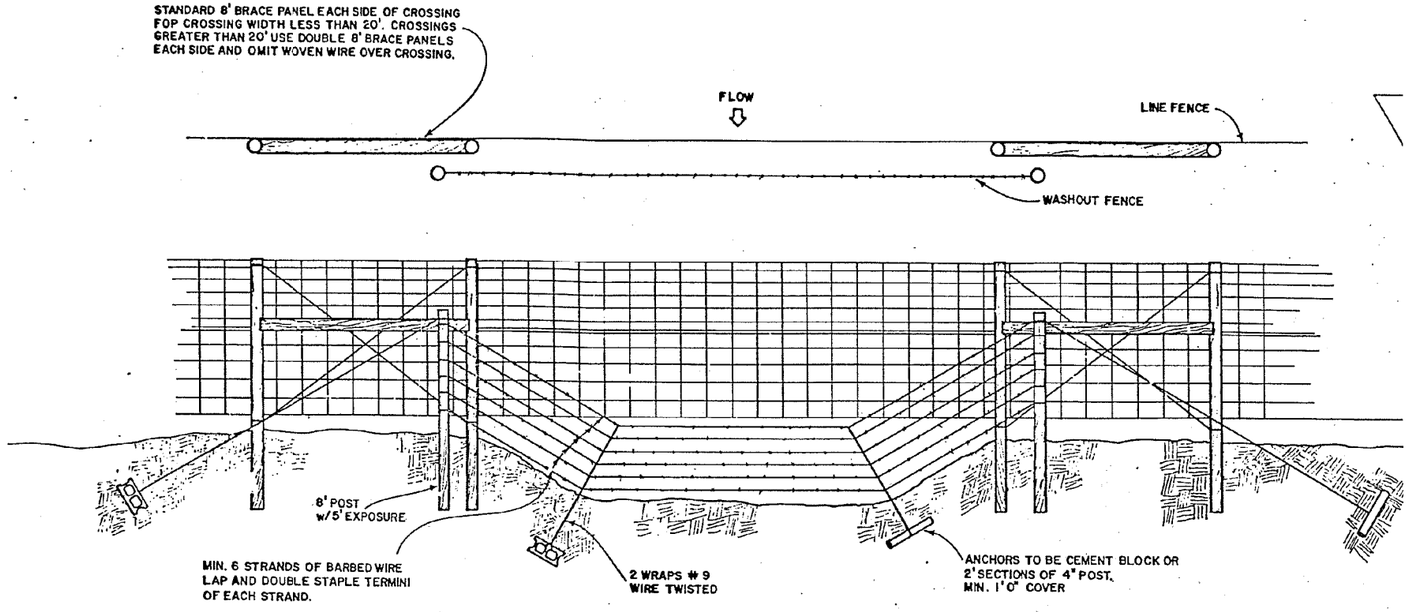

TYPICAL WASH CROSSING

This document was originally issued and sealed by Brian J. Rosin Registration Number PE- 2928, on 8/27/2014 and the original document is stored at the North Dakota Department of Transportation

Woven Wire Fence Details

Slope Repairs/Jacked or Bored Pipe

1 Mile North of Long-X Bridge

STATE	PROJECT NO.	SECTION NO.	SHEET NO.
ND	SER-7-085(095)127	20	4

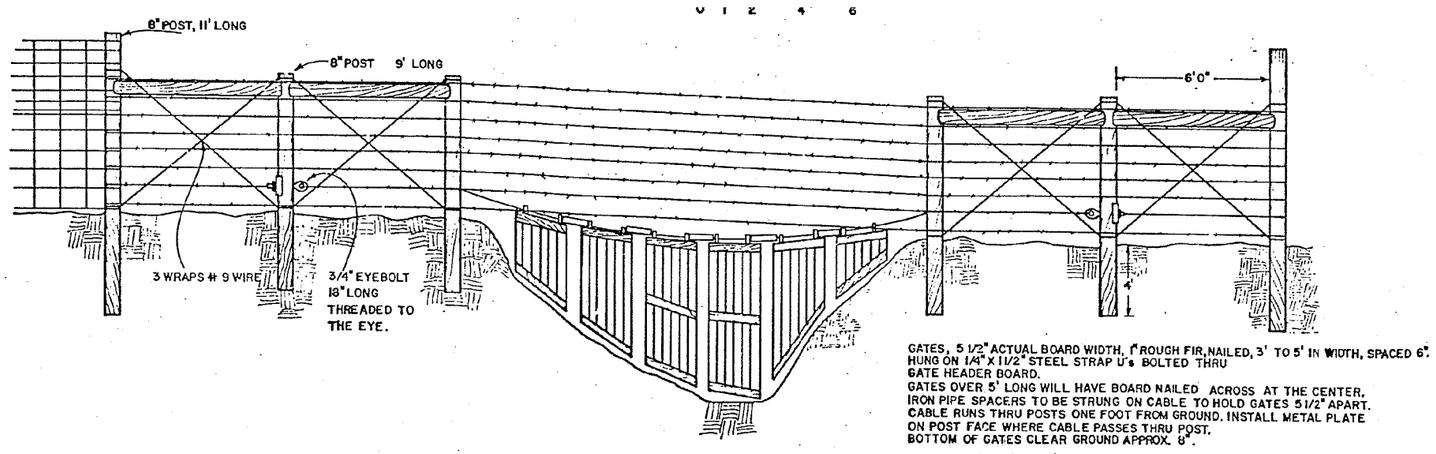

FLOOD GATE

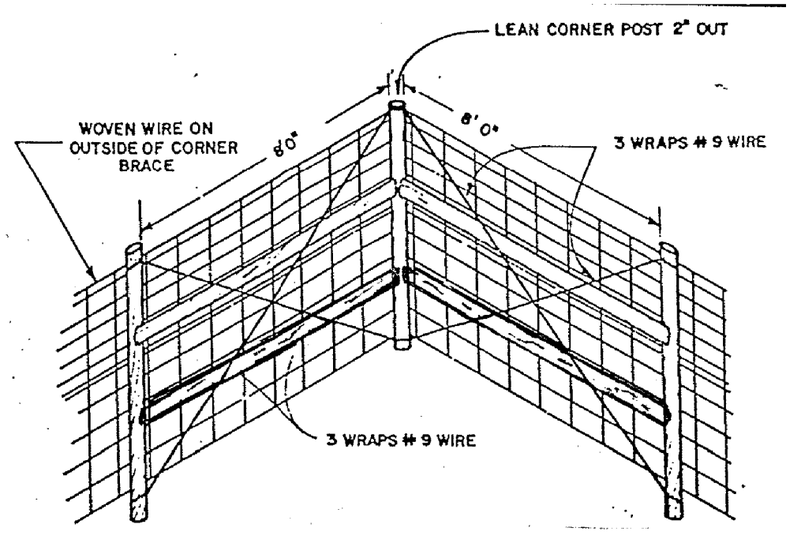

QUAD CORNER BRACE

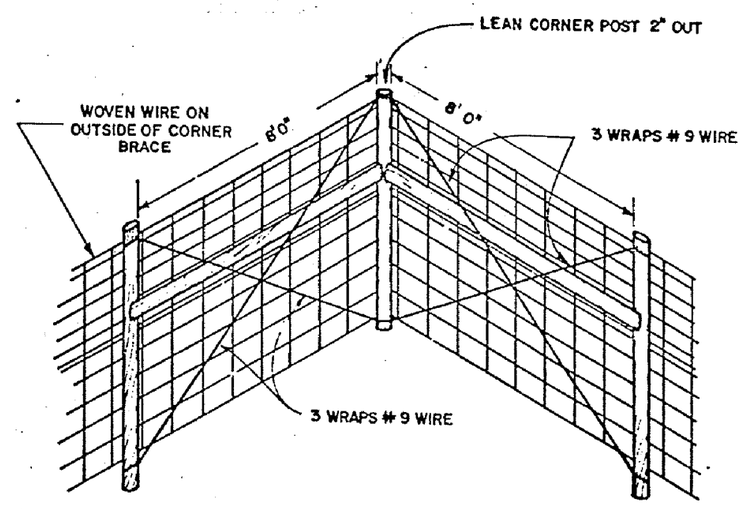

TYPICAL CORNER OVER 15°

This document was originally issued and sealed by Brian J. Rosin Registration Number PE- 2928, on 8/27/2014 and the original document is stored at the North Dakota Department of Transportation

Woven Wire Fence Details

Slope Repairs/Jacked or Bored Pipe

1 Mile North of Long-X Bridge

STATE	PROJECT NO.	SECTION NO.	SHEET NO.
ND	SER-7-085(095)127	30	1

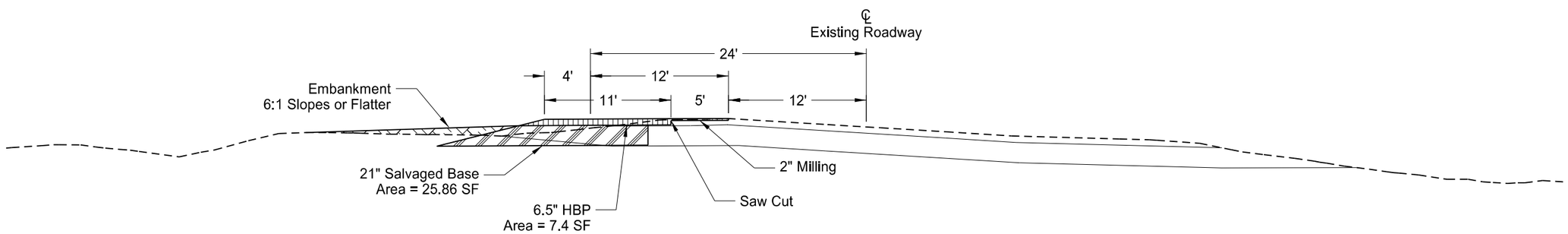

This document was originally issued and sealed by Brian J. Rosin Registration Number PE- 2928, on 8/27/2014 and the original document is stored at the North Dakota Department of Transportation

Proposed Typicals

Auxiliary Lane into Park Overlook

Slope Repairs/Jacked or Bored Pipe

1 Mile North of Long-X Bridge

HYDRAULIC DATA FOR SER-7-085(095)127 (A)

STATION	EXISTING PIPE	PROPOSED PIPE SIZE	DRAINAGE AREA (ACRES)	25-YEAR DATA				100-YEAR DATA	
				DESIGN DISCHARGE (CFS)	DESIGN HEADWATER (FT)	DESIGN VELOCITY (FPS)	DESIGN STAGE (NAVD 88)	100-YEAR DISCHARGE (CFS)	100-YEAR STAGE (NAVD 88)
36+96	30" x 328' RCP/CSP	30" (B)	10.14	17.7	2.05	6.13	2170.73	27.5	2171.52
50+69	24" x 184' RCP	30" (B)	9.57	18.5	2.04	6.23	2267.73	28.5	2268.54
61+74	30" x 342' RCP	30" (B)	15.93	27.2	2.72	7.28	2323.00	42.1	2324.67

(A) Hydraulic data provided is for smooth-walled (Manning's n=0.012) type conduits.
(B) Crossing includes Drop Manhole near outlet end of pipe. See Manhole and Pipe Detail for location.

This document was originally issued and sealed by Randall Sandvig Registration Number PE- 8783, on 05/15/14 and the original document is stored at the North Dakota Department of Transportation

Hydraulic Data

US 85

STATE	PROJECT NO.	SECTION NO.	SHEET NO.
ND	SER-7-085(095)127	51	1

Begin Station / Location	Begin Offset	End Station / Location	End Offset	Length	Pipe Conduit Pay Size	Pipe Conduit Approach Pay Size		Allowable Material	Required Diameter	Minimum Thickness	R1 Fabric (Pay Item)	(A) End Sections Begin	(A) End Sections End	Applicable Backfill Detail
				LF					In	In	SY	EA	EA	
36+08.39	203.29' Lt	36+23.49	167.89' Lt	36	30			Reinforced Concrete Pipe - Class III (barrel length = 36 LF)	30			Y		D-714-27
								Polymeric Coated Steel 2 2/3" x 1/2" (over zinc or aluminum coated steel)	30	0.064				
36+23.49	167.89' Lt	36+23.49	167.89' Lt	11	60" Riser			Reinforced Concrete Pipe - Class III (barrel length = 11 LF)	60					D-722-5
36+23.49	167.89' Lt	37+37.96	98.5' Rt	288 Jacked or Bored	30			Reinforced Concrete Pipe - Class IV (barrel length = 288 LF)	30					D-714-16
								Smooth Wall Steel Pipe	30	0.406			Y	
48+99.69	238.8' Lt	48+99.7	201.23' Lt	36	30			Reinforced Concrete Pipe - Class III (barrel length = 36 LF)	30			Y		D-714-27
								Polymeric Coated Steel 2 2/3" x 1/2" (over zinc or aluminum coated steel)	30	0.064				
48+99.7	201.23' Lt	48+99.7	201.23' Lt	15	60" Riser			Reinforced Concrete Pipe - Class III (barrel length = 15 LF)	60					D-722-5
48+99.7	201.23' Lt	51+35.03	124.8' Rt	396 Jacked or Bored	30			Reinforced Concrete Pipe - Class IV (barrel length = 396 LF)	30					D-714-16
								Smooth Wall Steel Pipe	30	0.406			Y	
62+08.1	175.31' Lt	62+10.73	154.69' Lt	18	30			Reinforced Concrete Pipe - Class III (barrel length = 18 LF)	30			Y		D-714-27
								Polymeric Coated Steel 2 2/3" x 1/2" (over zinc or aluminum coated steel)	30	0.064				
62+10.73	154.69' Lt	62+10.73	154.69' Lt	17	60" Riser			Reinforced Concrete Pipe - Class III (barrel length = 17 LF)	60					D-722-5
62+10.73	154.69' Lt	61+50.75	87.82' Rt	248 Jacked or Bored	30			Reinforced Concrete Pipe - Class V (barrel length = 248 LF)	30					D-714-16
								Smooth Wall Steel Pipe	30	0.406			Y	

(A) Not paid for separately, to be included in the price bid for Pipe Conduit.

This document was originally issued and sealed by Brian J. Rosin Registration Number PE- 2928, on 8/27/2014 and the original document is stored at the North Dakota Department of Transportation

Allowable Pipe List

Slope Repairs/Jacked or Bored Pipe

1 Mile North of Long-X Bridge

STATE	PROJECT NUMBER	SECTION NO.	SHEET NO.
ND	SER-7-085(095)127	55	1

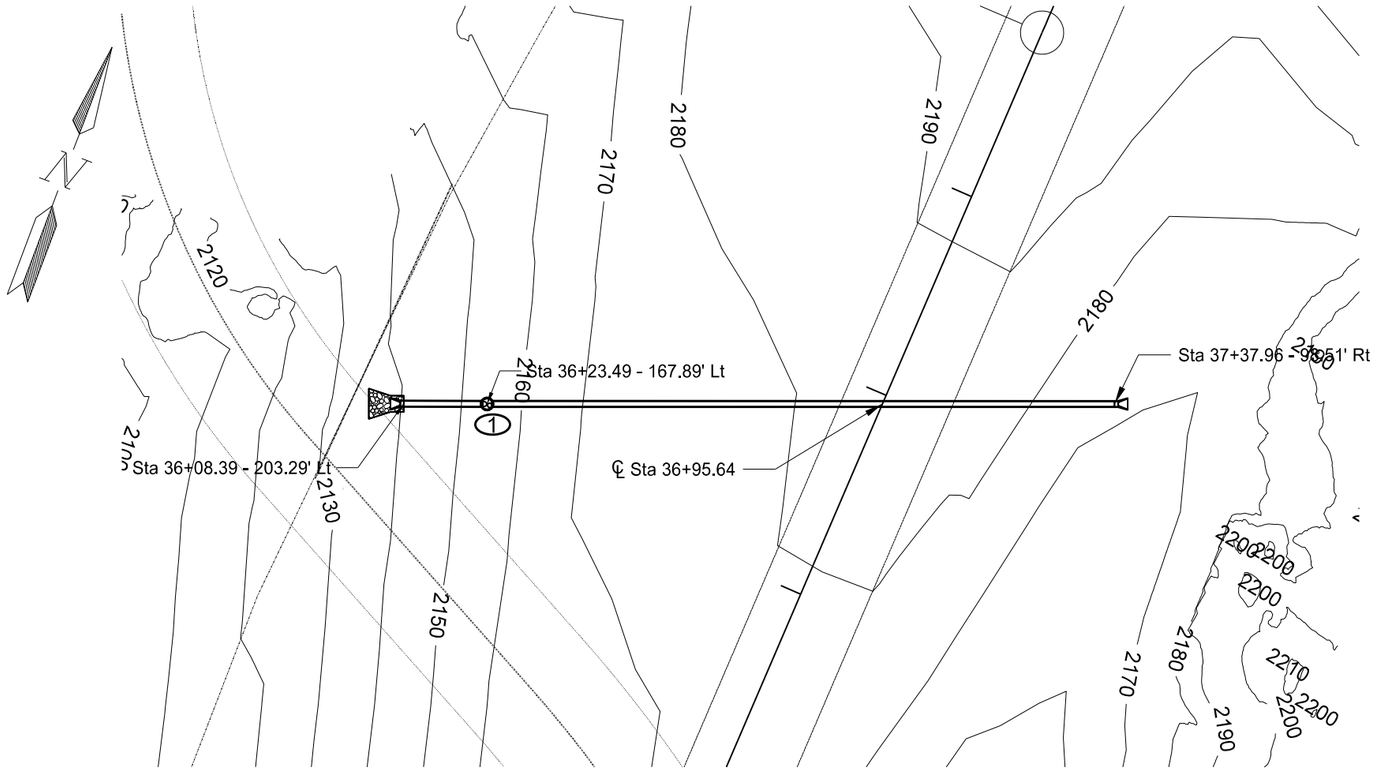

PLAN VIEW

MANHOLE DATA

Manhole No.	1 - 60In.
Sta.	36+23.49 - 167.89' Lt (OFFICELOC)
Top Elev.	2,150.25
Base Elev.	2,137.58
Invert Elev.	2,137.99
Riser	11.00 Ft
	----------
	30 In. Conduit W 2,137.99
	30 In. Conduit E 2,145.42

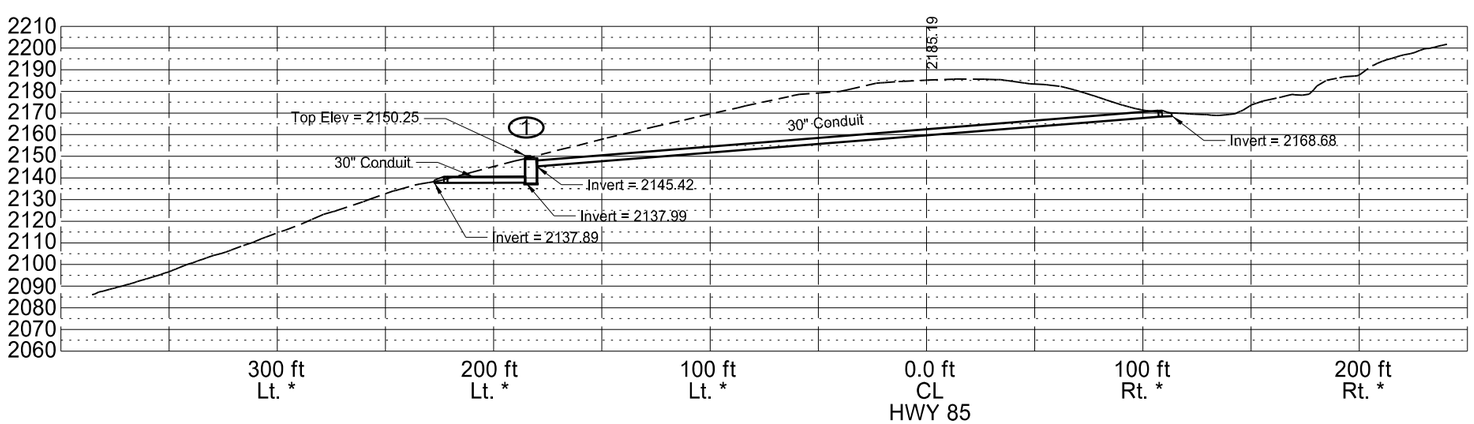

CROSS SECTION
* Distance along pipe centerline

This document was originally issued and sealed by Randall Sandvig Registration Number PE- 8783, on 02/24/14 and the original document is stored at the North Dakota Department of Transportation

Centerline Pipe

Manhole and Pipe Detail

STA 36+96
US 85

STATE	PROJECT NUMBER	SECTION NO.	SHEET NO.
ND	SER-7-085(095)127	55	2

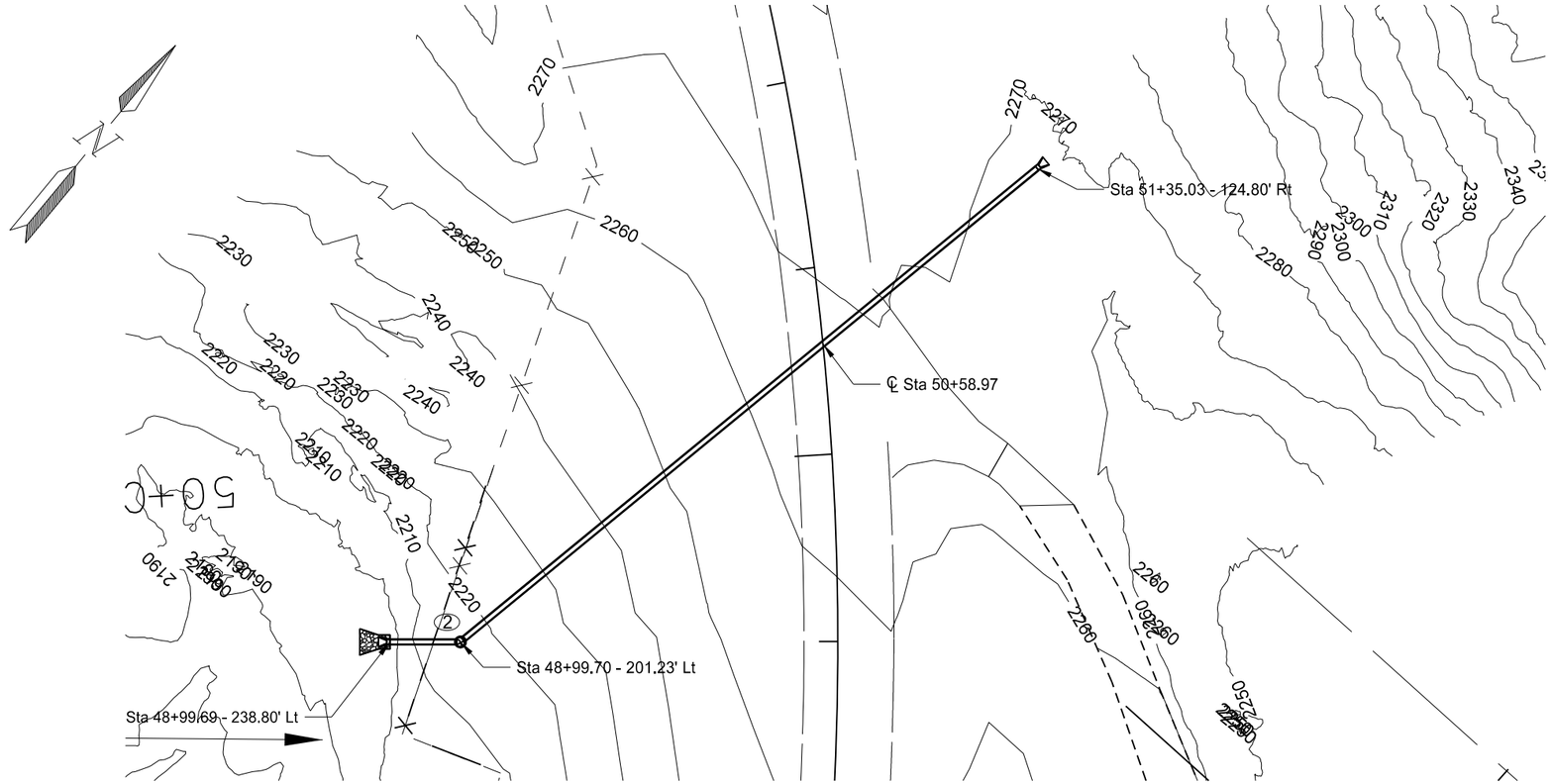

PLAN VIEW

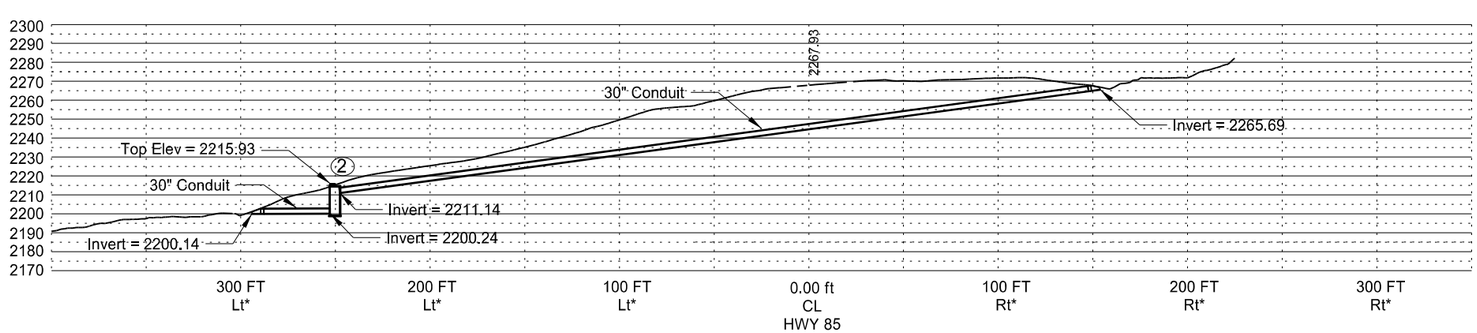

CROSS SECTION
* Distance along pipe centerline

MANHOLE DATA

Manhole No.	2 - 60In.
Sta.	48+99.70 - 201.23' Lt (OFFICELOC)
Top Elev.	2,215.93
Base Elev.	2,199.26
Invert Elev.	2,200.24
Riser	15.00 Ft
	----------
	30 In. Conduit W 2,200.24
	30 In. Conduit E 2,211.14

This document was originally issued and sealed by Randall Sandvig Registration Number PE- 8783, on 02/24/14 and the original document is stored at the North Dakota Department of Transportation

Centerline Pipe

Manhole and Pipe Detail

STA 50+59
US 85

STATE	PROJECT NUMBER	SECTION NO.	SHEET NO.
ND	SER-7-085(095)127	55	3

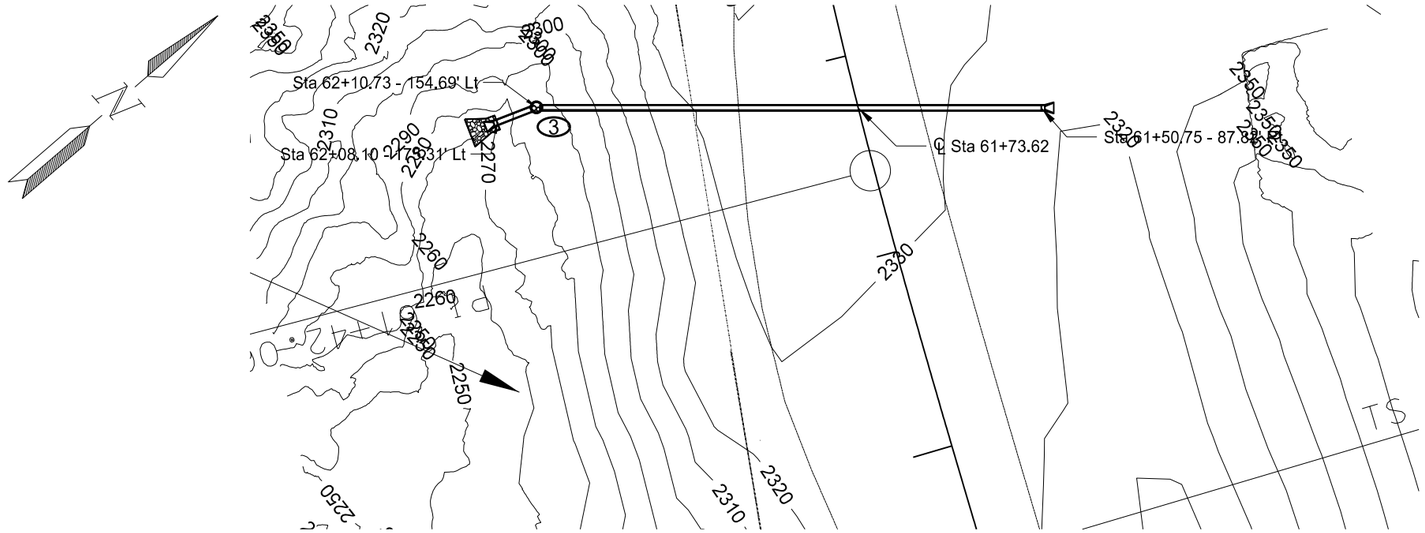

PLAN VIEW

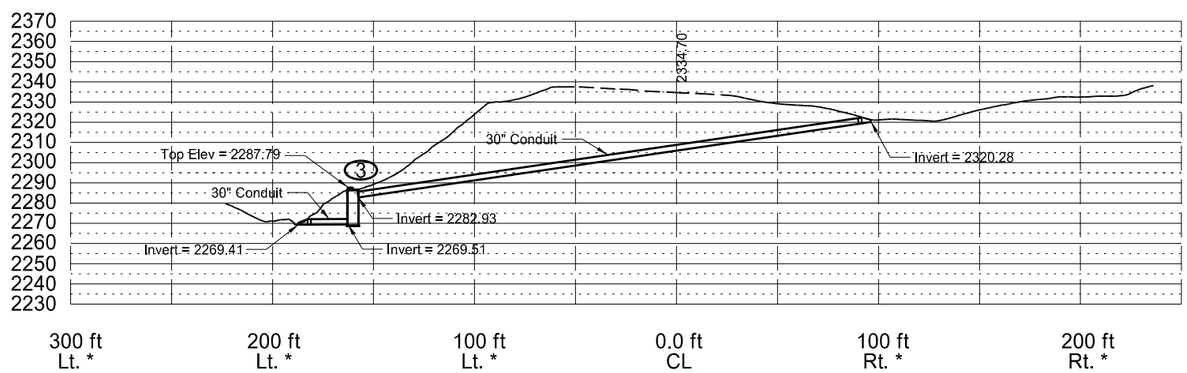

CROSS SECTION

*Distance along pipe centerline

MANHOLE DATA

Manhole No.	3 - 60In.
Sta.	62+10.73 - 154.69' Lt (OFFICELOC)
Top Elev.	2,287.79
Base Elev.	2,269.12
Invert Elev.	2,269.51
Riser	17.00 Ft

	30" Conduit W 2,269.51
	30" Conduit E 2,282.93

This document was originally issued and sealed by Randall Sandvig Registration Number PE- 8783, on 02/24/14 and the original document is stored at the North Dakota Department of Transportation

Centerline Pipe

Manhole and Pipe Detail

STA 61+74
US 85

STATE	PROJECT NO.	SECTION NO.	SHEET NO.
ND	SER-7-085(095)127	60	1

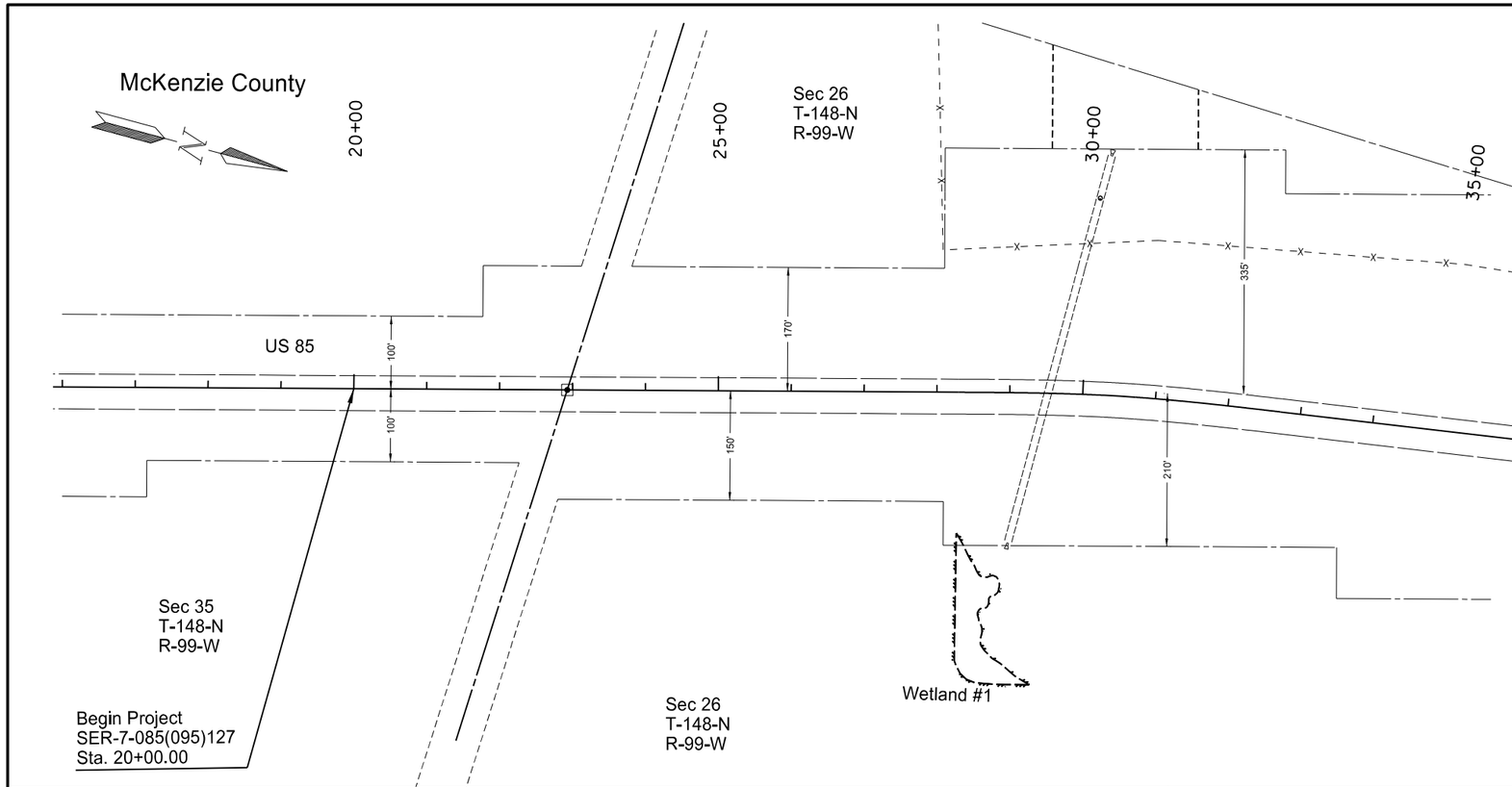

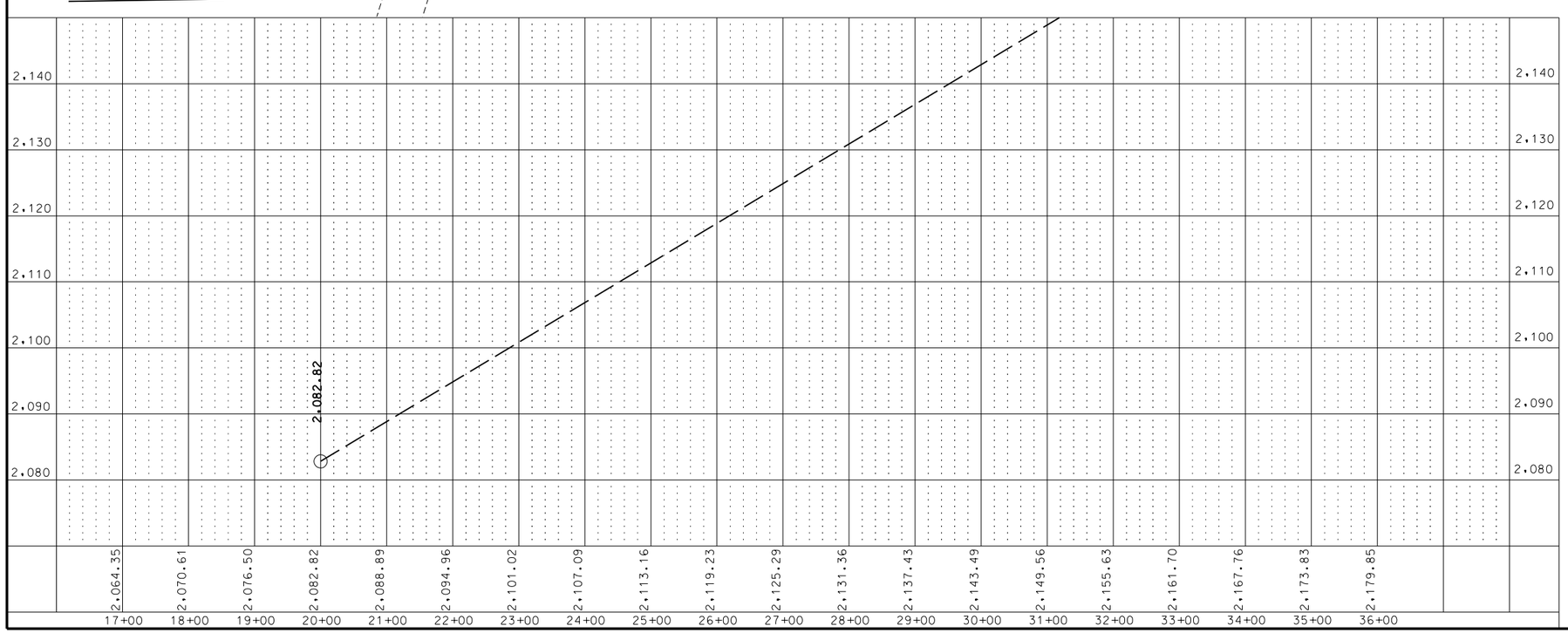

This document was originally issued and sealed by Brian J. Rosin Registration Number PE- 2928, on 8/27/2014 and the original document is stored at the North Dakota Department of Transportation

Plan & Profile Sheet

Slope Repairs/Jacked or Bored Pipe

1 Mile North of Long-X Bridge

STATE	PROJECT NO.	SECTION NO.	SHEET NO.
ND	SER-7-085(095)127	60	2

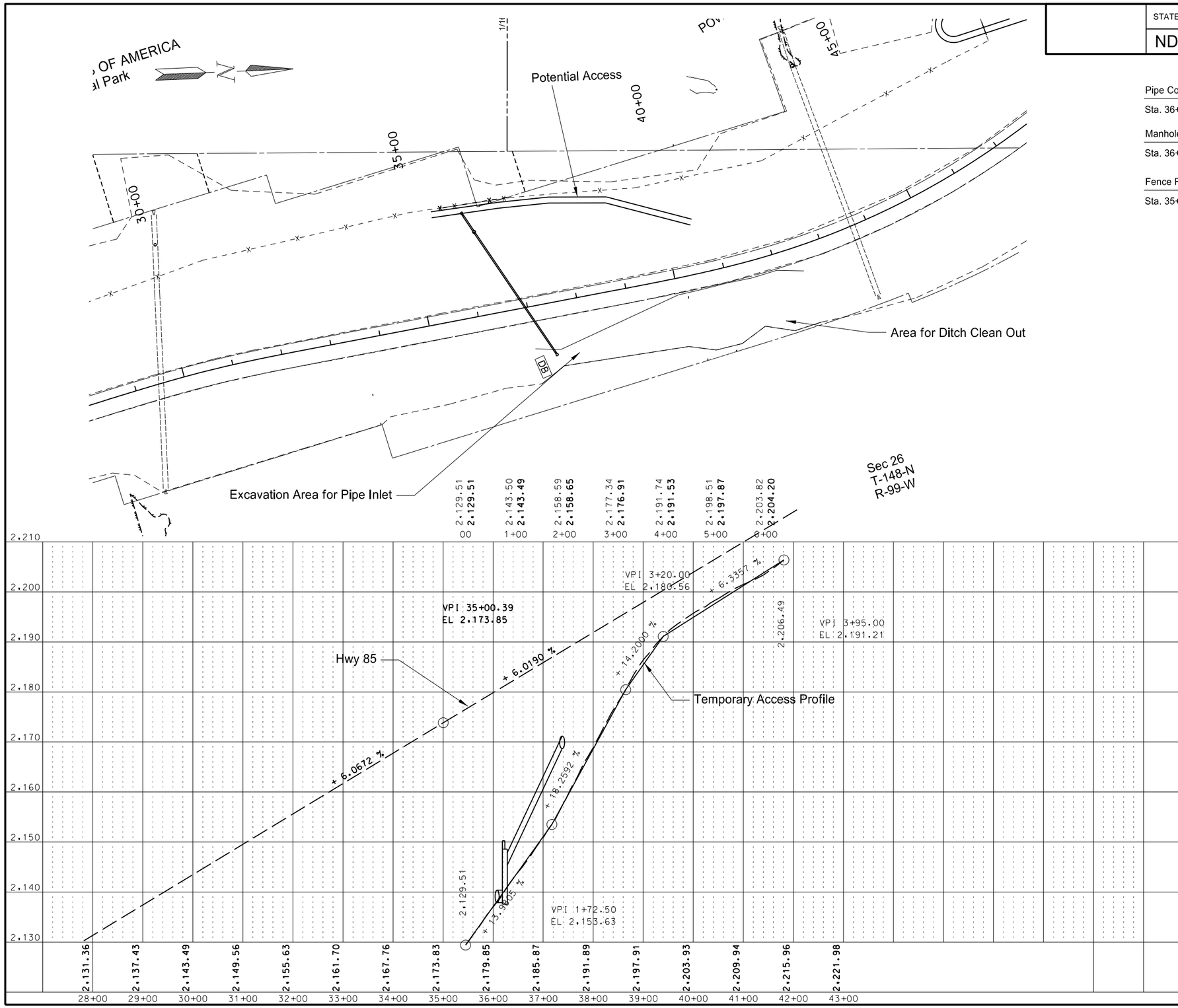

Pipe Conduit 30IN - Jacked or Bored

Sta. 36+95.64 ℄	288 LF

Manhole 60 IN

Sta. 36+23.49 167.9' Lt	1 EA

Fence Remove & Reset

Sta. 35+25 to 36+75	150 LF

This document was originally issued and sealed by Brian J. Rosin Registration Number PE- 2928, on 8/27/2014 and the original document is stored at the North Dakota Department of Transportation

Plan & Profile Sheet

Slope Repairs/Jacked or Bored Pipe

1 Mile North of Long-X Bridge

STATE	PROJECT NO.	SECTION NO.	SHEET NO.
ND	SER-7-085(095)127	60	3

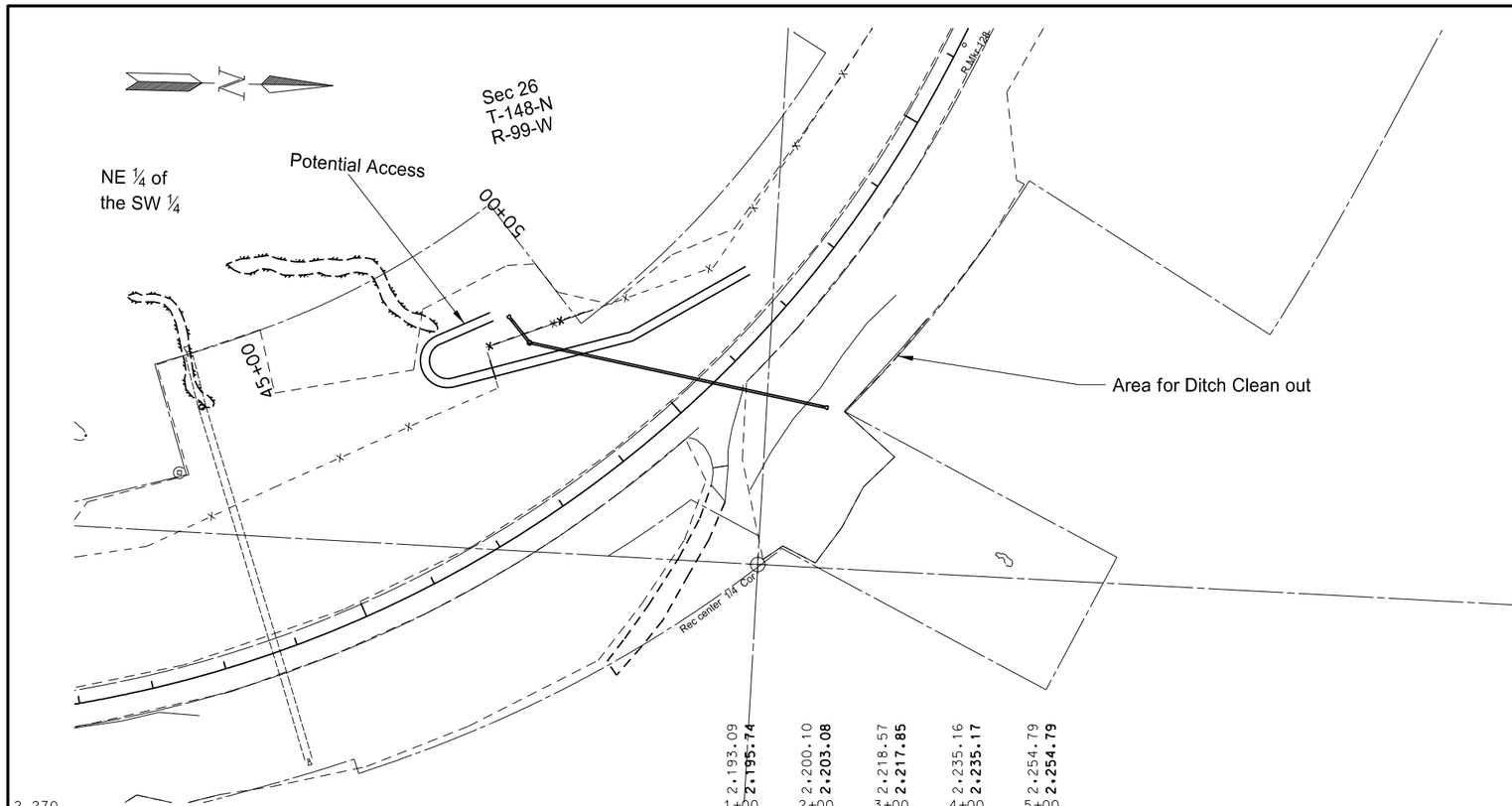

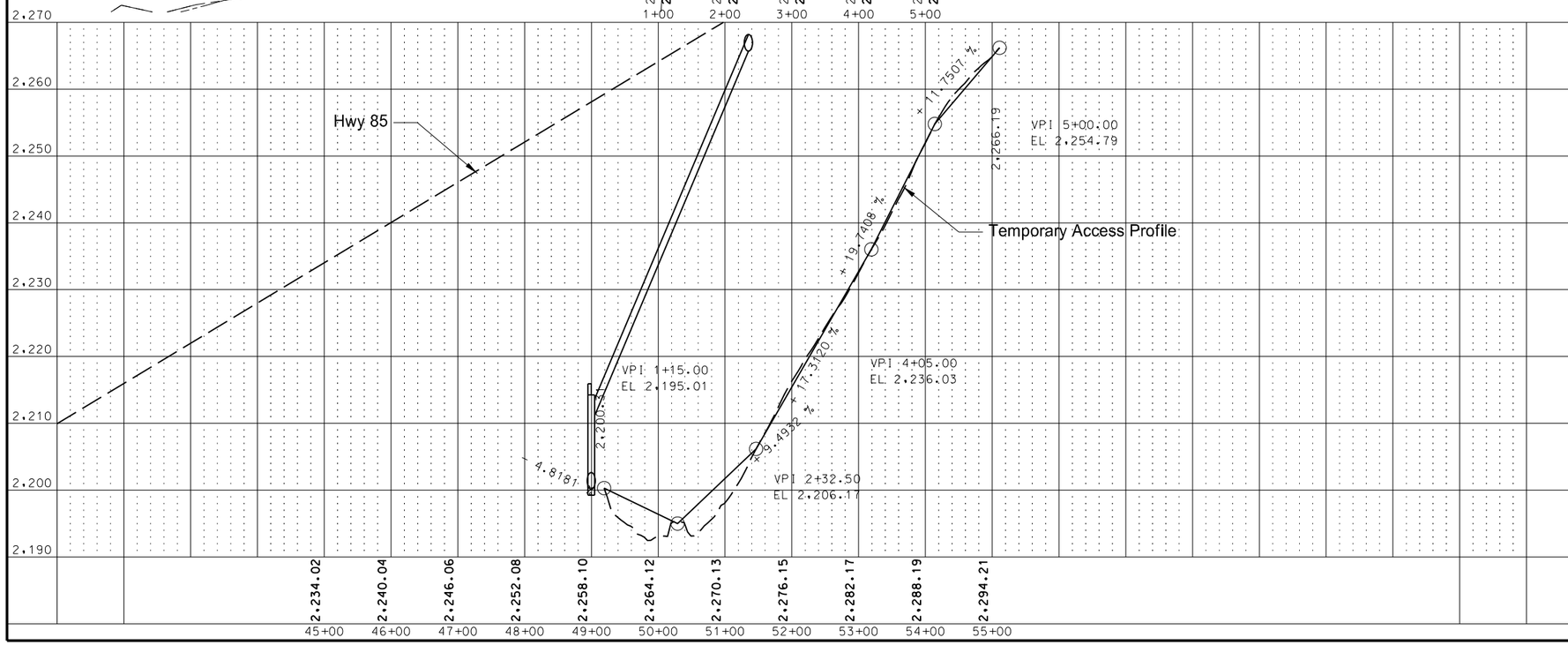

Pipe Conduit 30IN - Jacked or Bored

Sta. 50+58.97 ℄	396 LF

Manhole 60 IN

Sta. 48+99.7 201.23' Lt	1 EA

Fence Remove & Reset

Sta. 48+00 to 49+50	150 LF

This document was originally issued and sealed by Brian J. Rosin Registration Number PE- 2928, on 8/27/2014 and the original document is stored at the North Dakota Department of Transportation

Plan & Profile Sheet

Slope Repairs/Jacked or Bored Pipe

1 Mile North of Long-X Bridge

STATE	PROJECT NO.	SECTION NO.	SHEET NO.
ND	SER-7-085(095)127	60	4

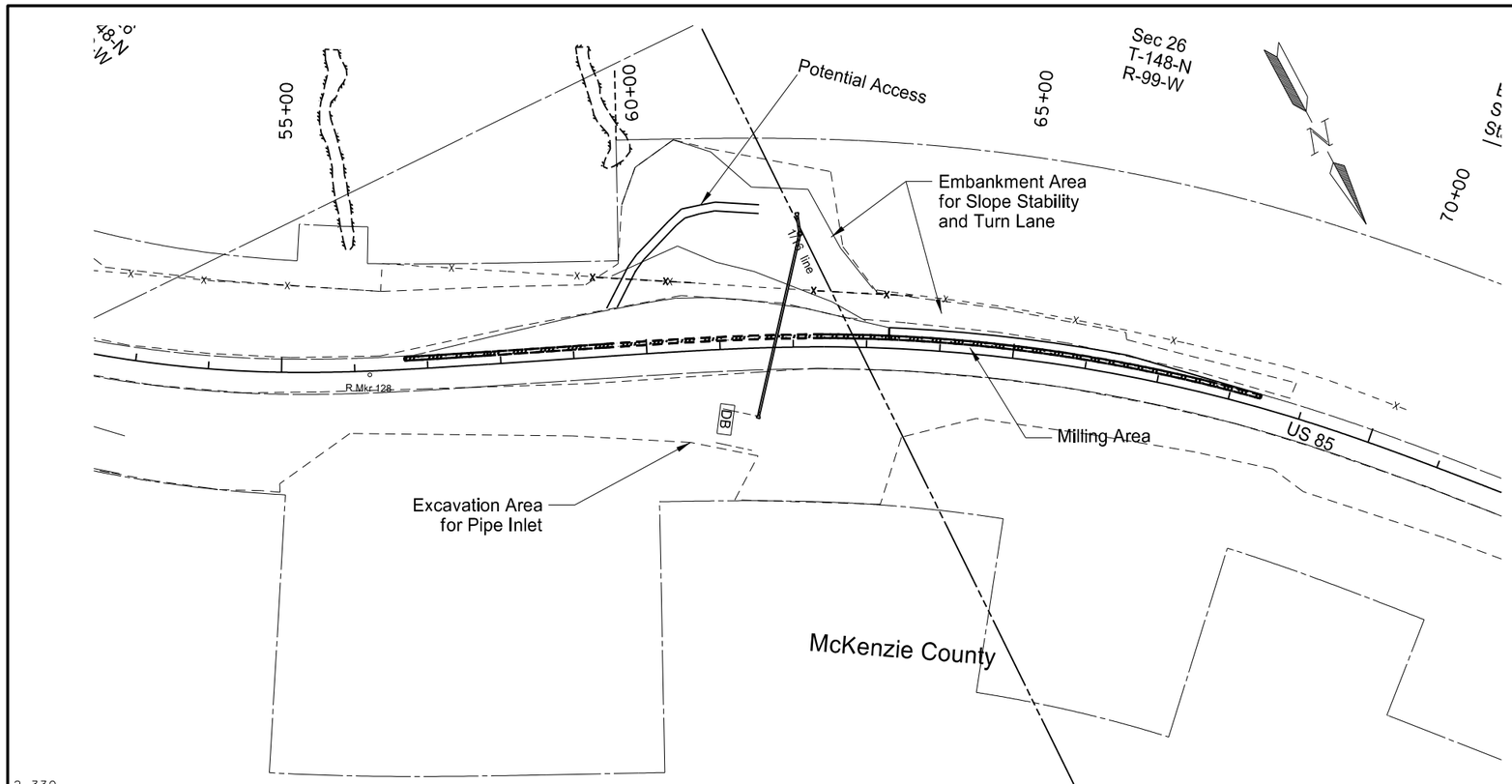

Saw Bituminous Surfacing - Full Depth

Sta. 63+30 to 68+40 Lt.	530 LF

Milling Pavement Surface

Sta. 52+30 to 68+40 Lt.	1010 SY

Pipe Conduit 30IN - Jacked or Bored

Sta. 61+73.62 ℄	248 LF

Manhole 60 IN

Sta. 62+10.73 154.7' Lt	1 EA

Fence Remove & Reset

Sta. 59+50 to 64+00	300 LF

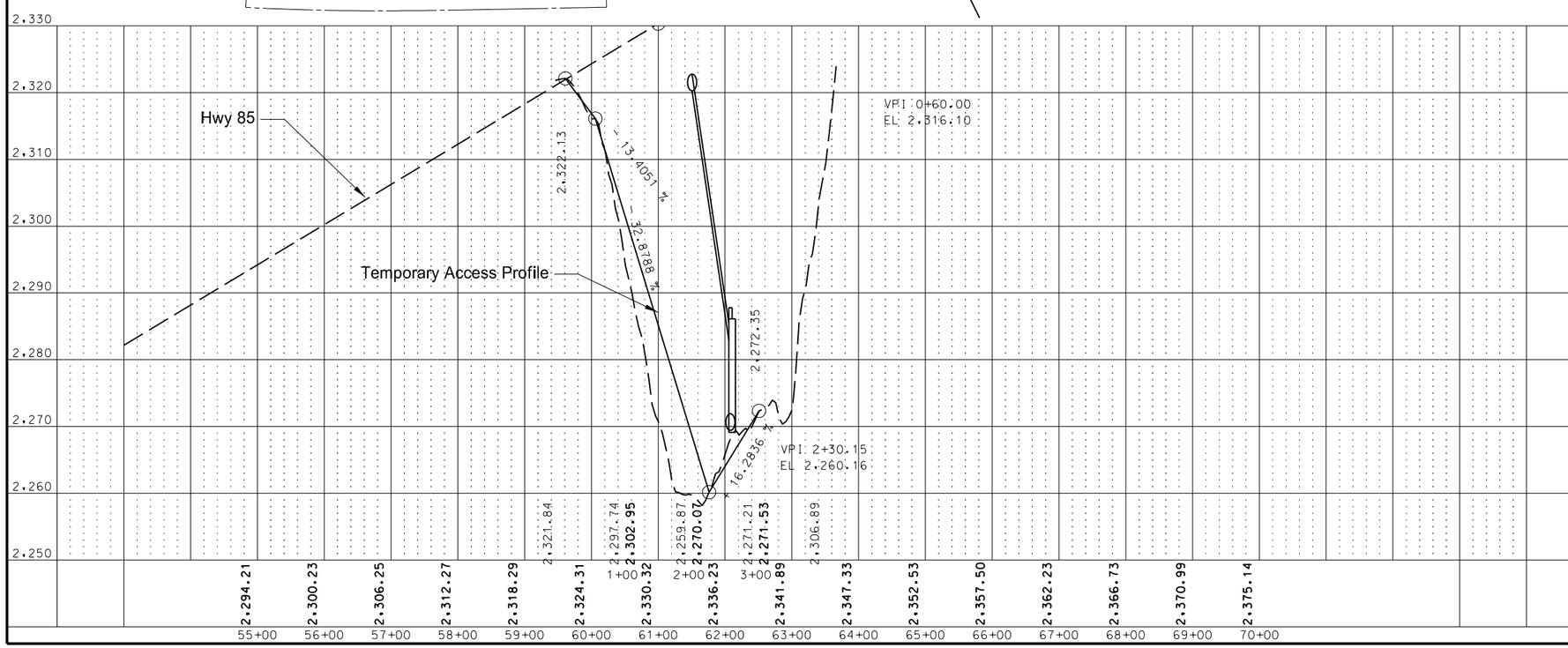

This document was originally issued and sealed by Brian J. Rosin Registration Number PE- 2928, on 8/27/2014 and the original document is stored at the North Dakota Department of Transportation

Plan & Profile Sheet

Slope Repairs/Jacked or Bored Pipe

1 Mile North of Long-X Bridge

STATE	PROJECT NO.	SECTION NO.	SHEET NO.
ND	SER-7-085(095)127	60	5

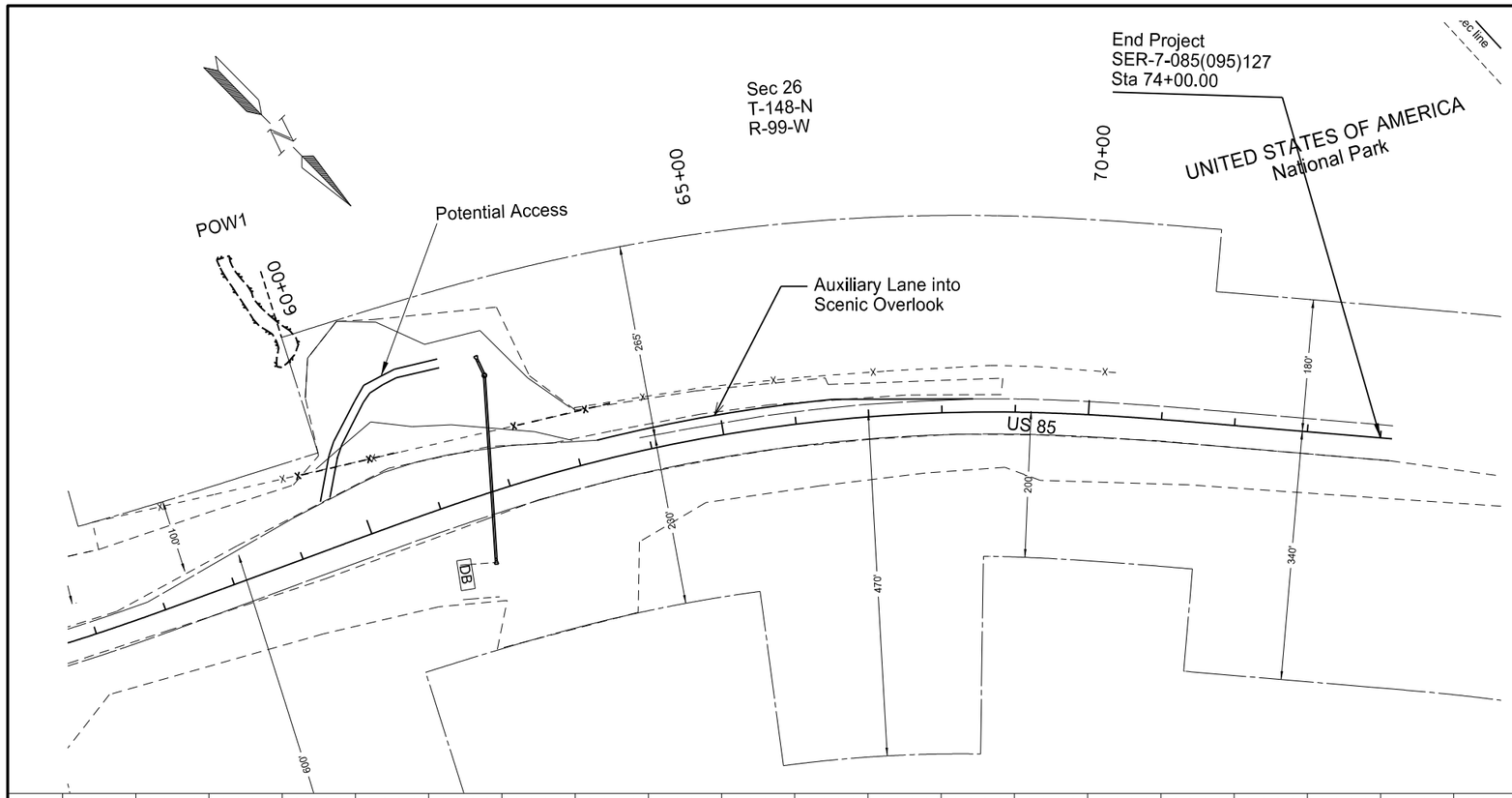

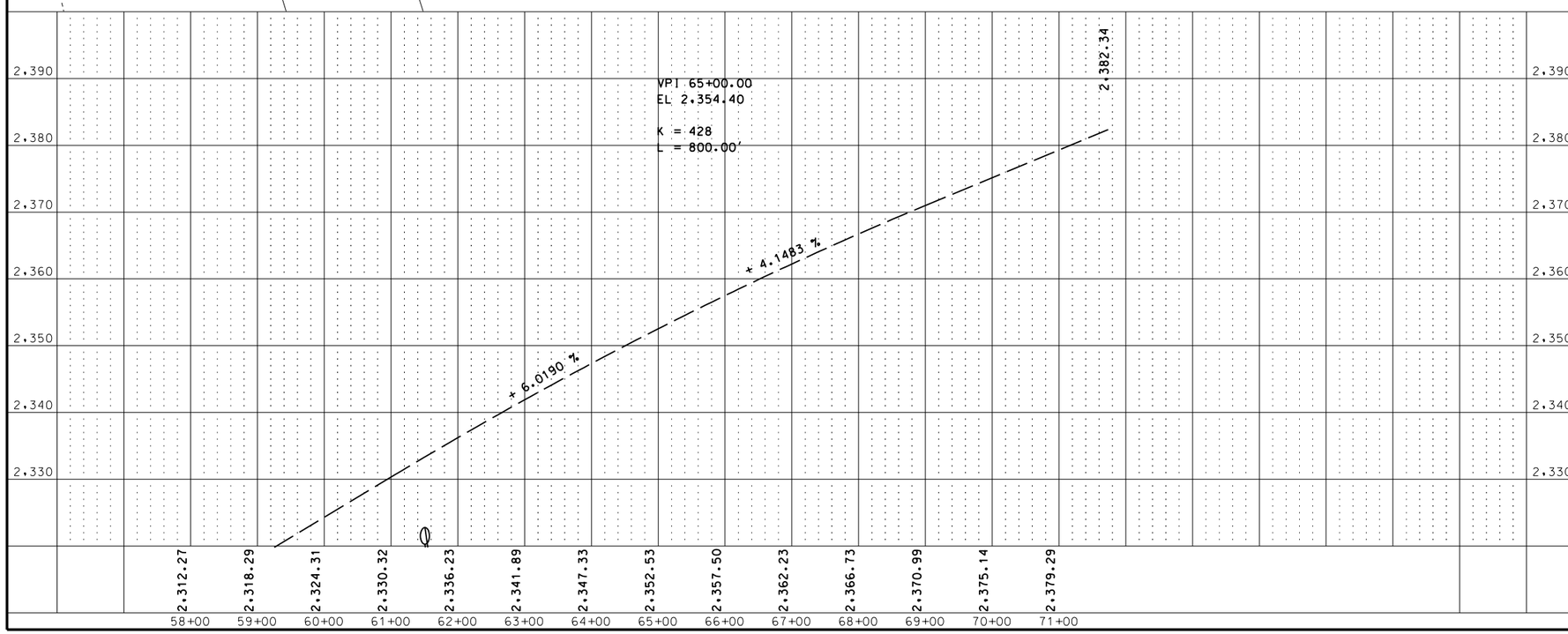

This document was originally issued and sealed by Brian J. Rosin Registration Number PE- 2928, on 8/27/2014 and the original document is stored at the North Dakota Department of Transportation

Plan & Profile Sheet

Slope Repairs/Jacked or Bored Pipe

1 Mile North of Long-X Bridge

STATE	PROJECT NO.	SECTION NO.	SHEET NO.
ND	SER-7-085(095)127	75	1

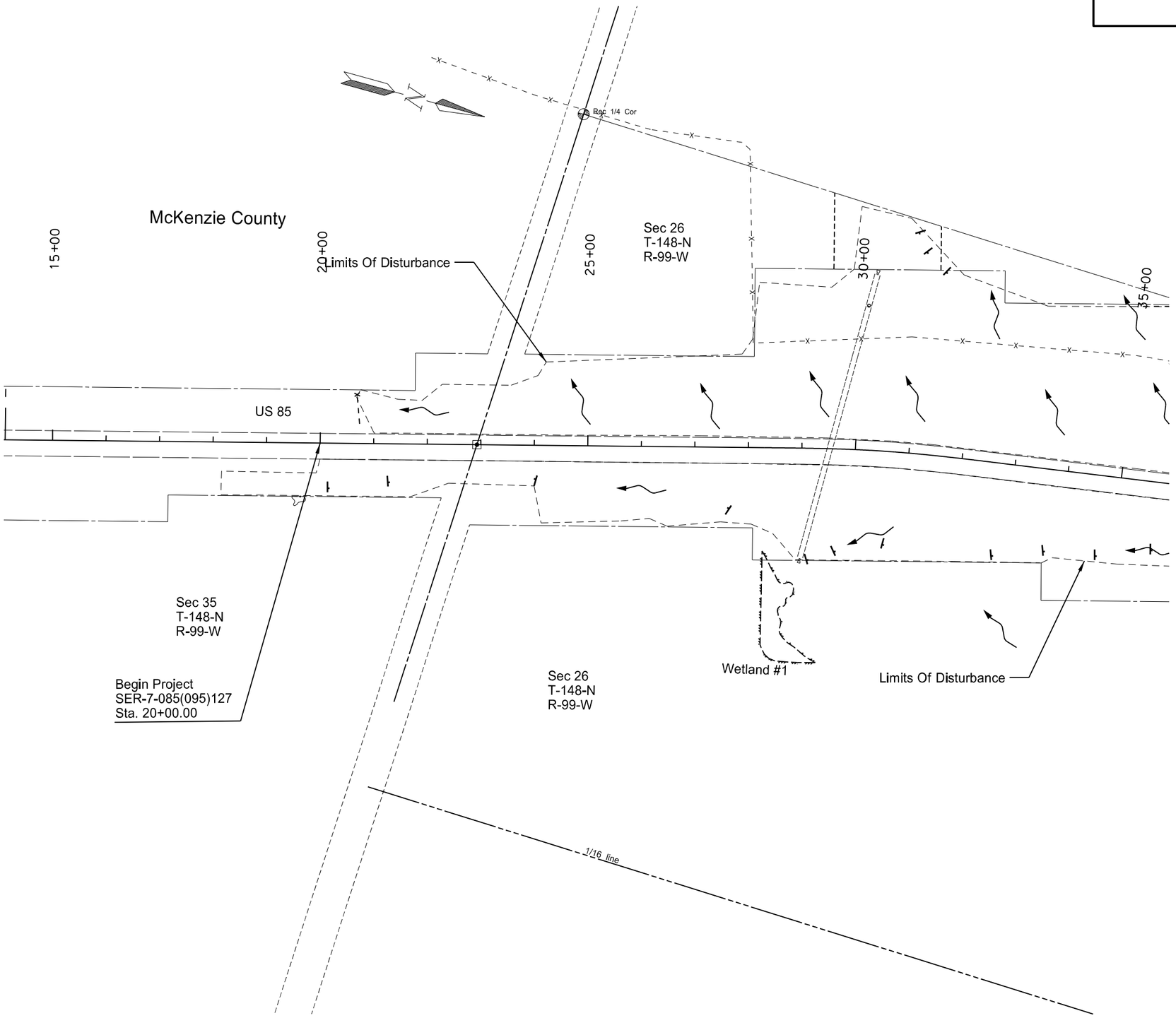

This document was originally issued and sealed by Brian J. Rosin Registration Number PE- 2928, on 8/27/2014 and the original document is stored at the North Dakota Department of Transportation

Wetlands

Slope Repairs/Jacked or Bored Pipe

1 Mile North of Long-X Bridge

STATE	PROJECT NO.	SECTION NO.	SHEET NO.
ND	SER-7-085(095)127	75	2

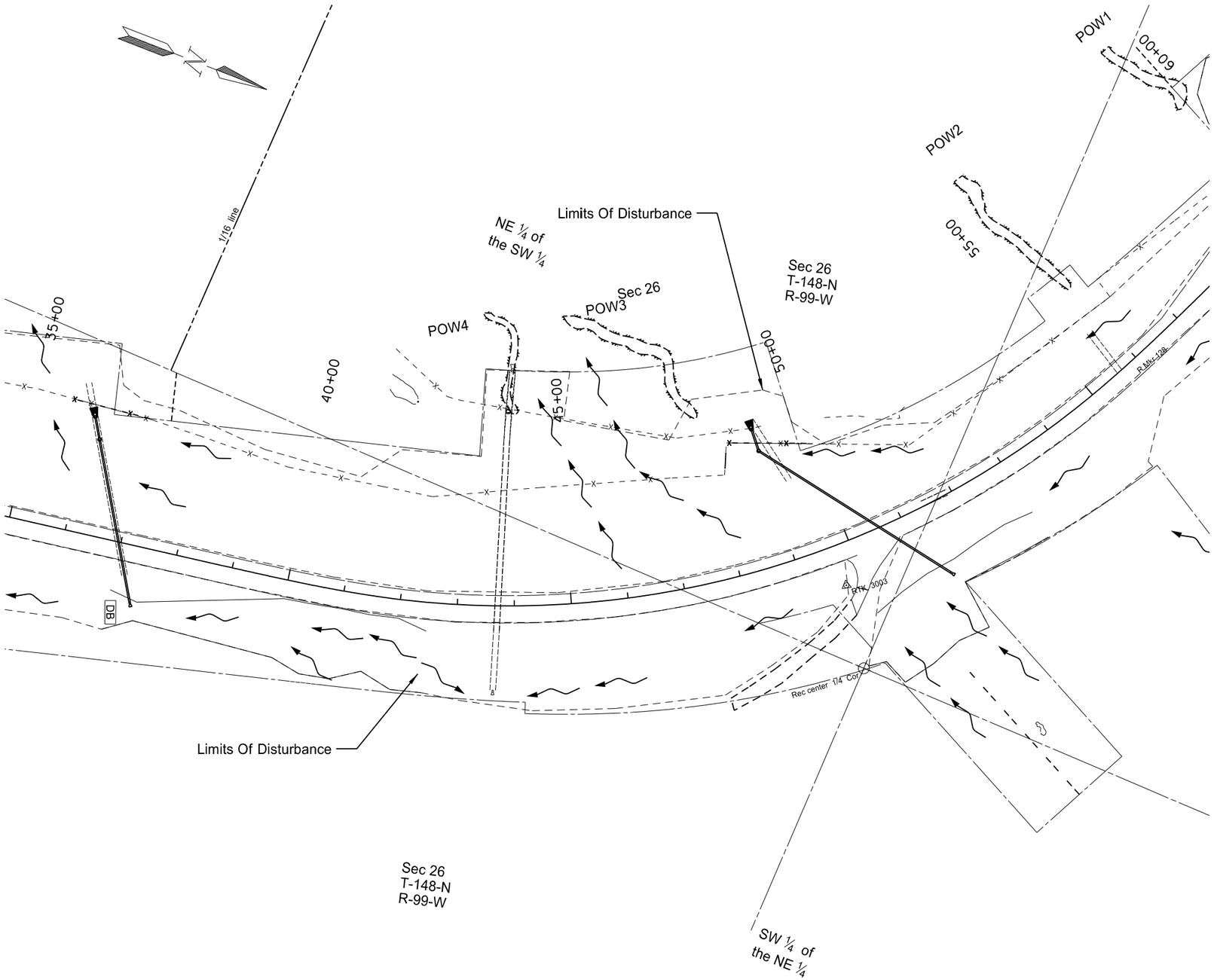

This document was originally issued and sealed by Brian J. Rosin Registration Number PE- 2928, on 8/27/2014 and the original document is stored at the North Dakota Department of Transportation

Wetlands

Slope Repairs/Jacked or Bored Pipe

1 Mile North of Long-X Bridge

STATE	PROJECT NO.	SECTION NO.	SHEET NO.
ND	SER-7-085(095)127	75	3

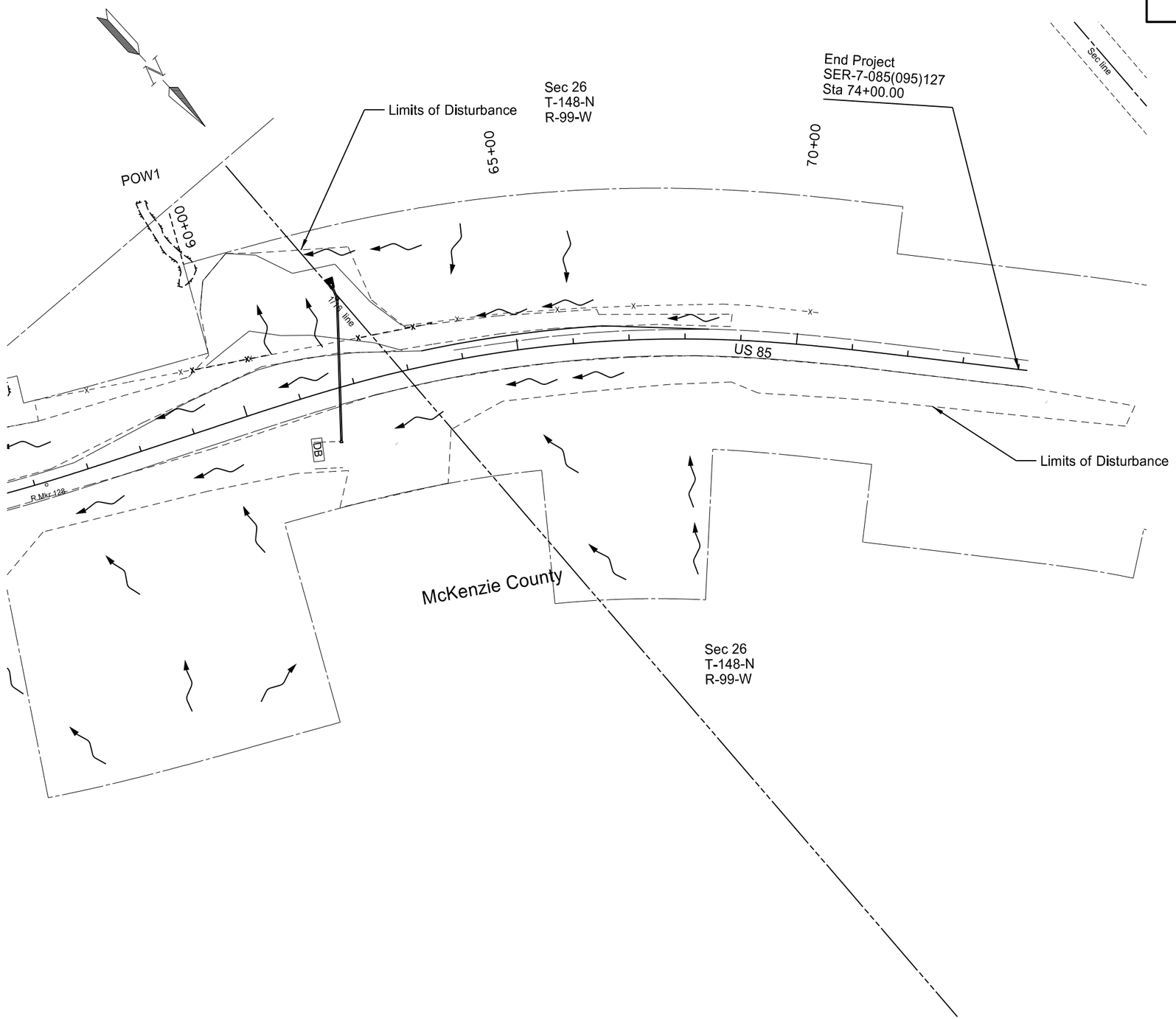

This document was originally issued and sealed by Brian J. Rosin Registration Number PE- 2928, on 8/27/2014 and the original document is stored at the North Dakota Department of Transportation

Wetlands

Slope Repairs/Jacked or Bored Pipe

1 Mile North of Long-X Bridge

STATE	PROJECT NO.	SECTION NO.	SHEET NO.
ND	SER-7-085(095)127	76	1

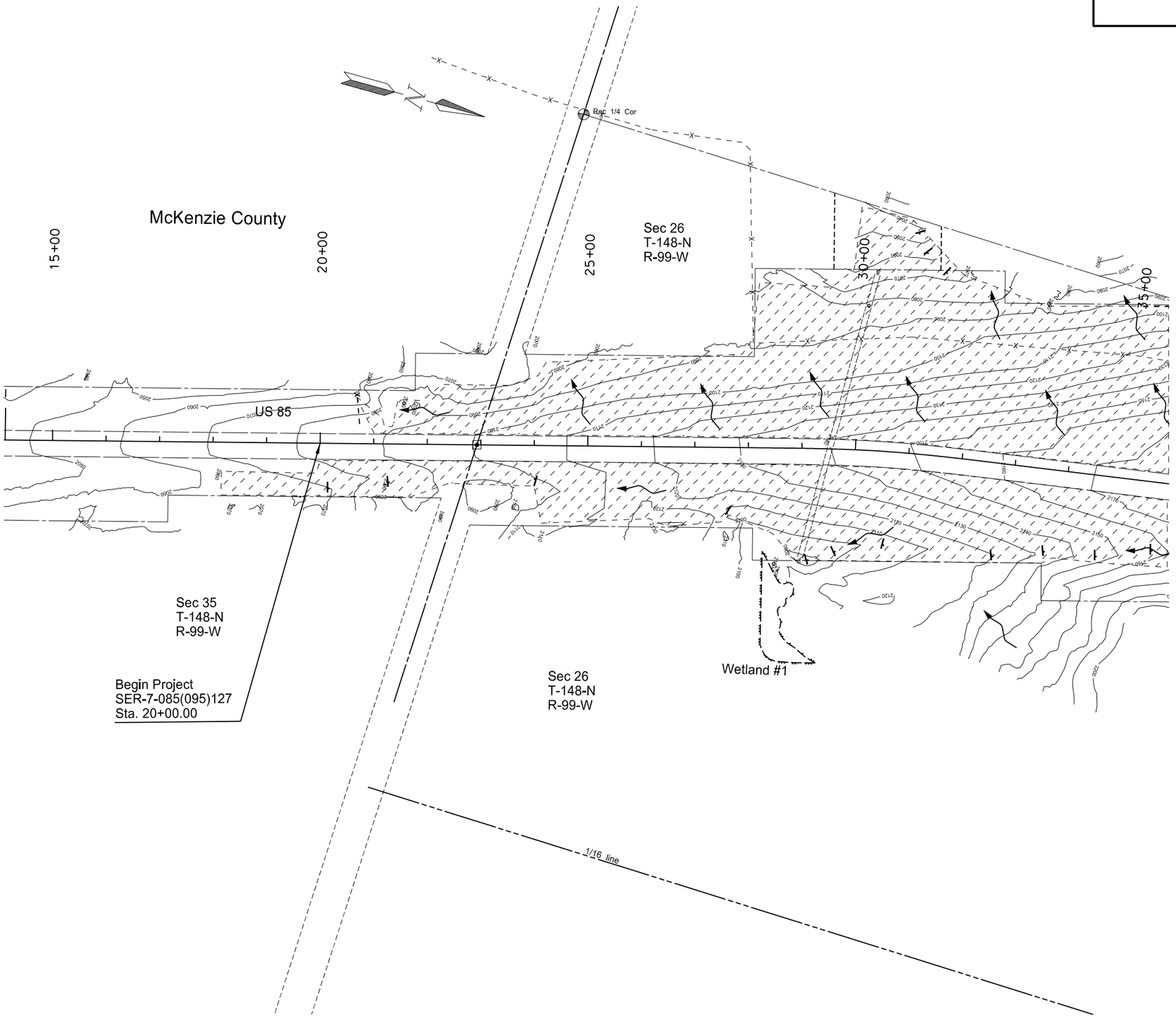

Silt Fence Supported	
Left	60 LF

Fiber Roll 12 IN - Temporary	
Left	60 LF
Right	200 LF

Remove Silt Fence Supported	
Left	60 LF

Remove Fiber Rolls 12 IN	
Left	60 LF
Right	200 LF

x- - - - - Silt Fence

Fiber Rolls

Temporary Seeding Area

This document was originally issued and sealed by Brian J. Rosin Registration Number PE- 2928, on 8/27/2014 and the original document is stored at the North Dakota Department of Transportation

Temporary Erosion Control

Slope Repairs/Jacked or Bored Pipe

1 Mile North of Long-X Bridge

STATE	PROJECT NO.	SECTION NO.	SHEET NO.
ND	SER-7-085(095)127	76	2

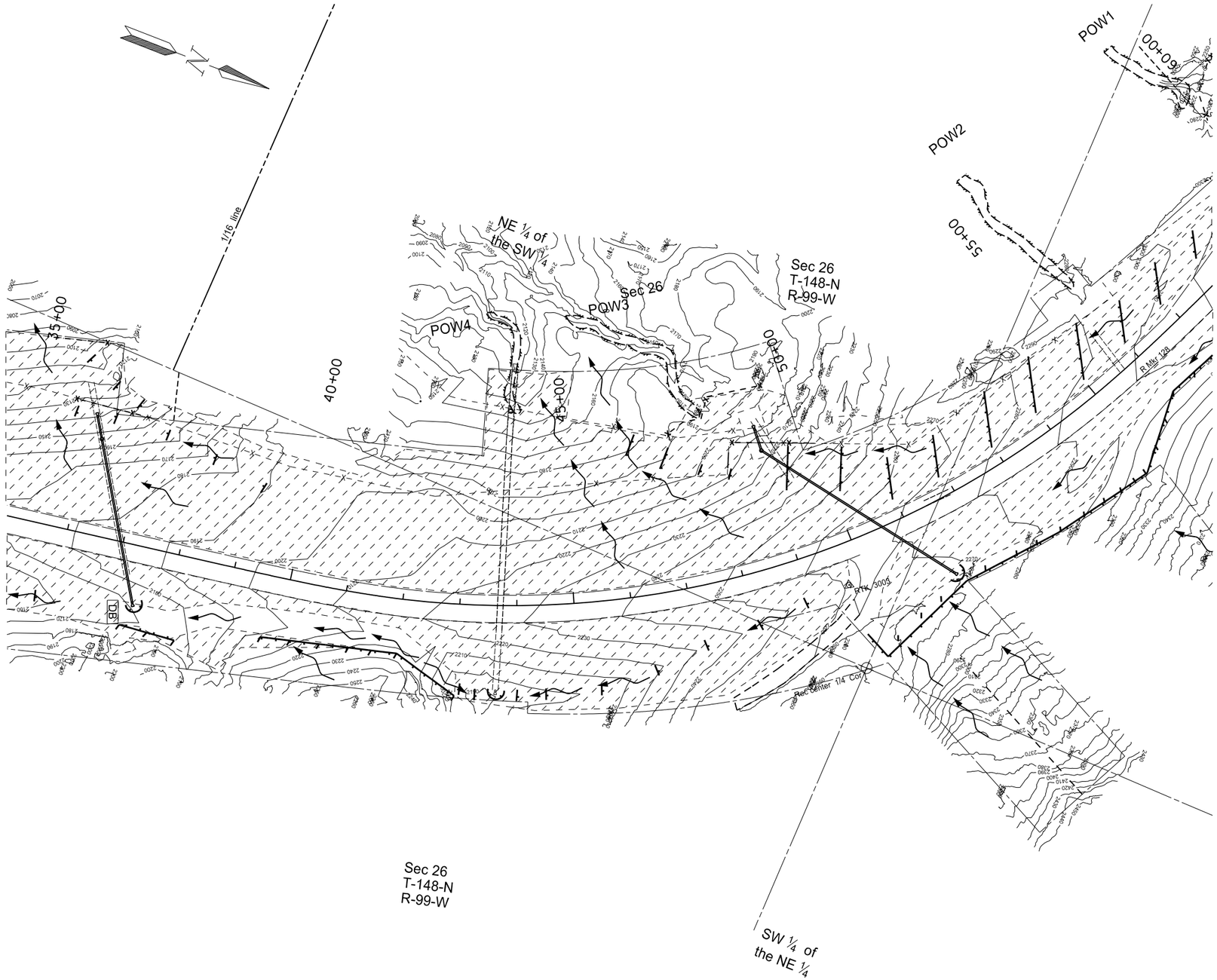

Silt Fence Supported

Sta. 36+00 Lt	100 LF
Sta. 49+00 Lt	200 LF

Fiber Roll 12 IN - Temporary

Sta. 36+00 Lt	180 LF
Sta. 36+00 Rt	745 LF
Sta. 49+00 Lt	740 LF
Sta. 49+00 Rt	1300 LF

Remove Silt Fence Supported

Sta. 36+00 Lt	100 LF
Sta. 49+00 Lt	200 LF

Remove Fiber Roll 12 IN

Sta. 36+00 Lt	180 LF
Sta. 36+00 Rt	745 LF
Sta. 49+00 Lt	740 LF
Sta. 49+00 Rt	1300 LF

x– – – – – Silt Fence

Fiber Rolls

Temporary Seeding Area

This document was originally issued and sealed by Brian J. Rosin Registration Number PE- 2928, on 8/27/2014 and the original document is stored at the North Dakota Department of Transportation

Temporary Erosion Control

Slope Repairs/Jacked or Bored Pipe

1 Mile North of Long-X Bridge

STATE	PROJECT NO.	SECTION NO.	SHEET NO.
ND	SER-7-085(095)127	76	3

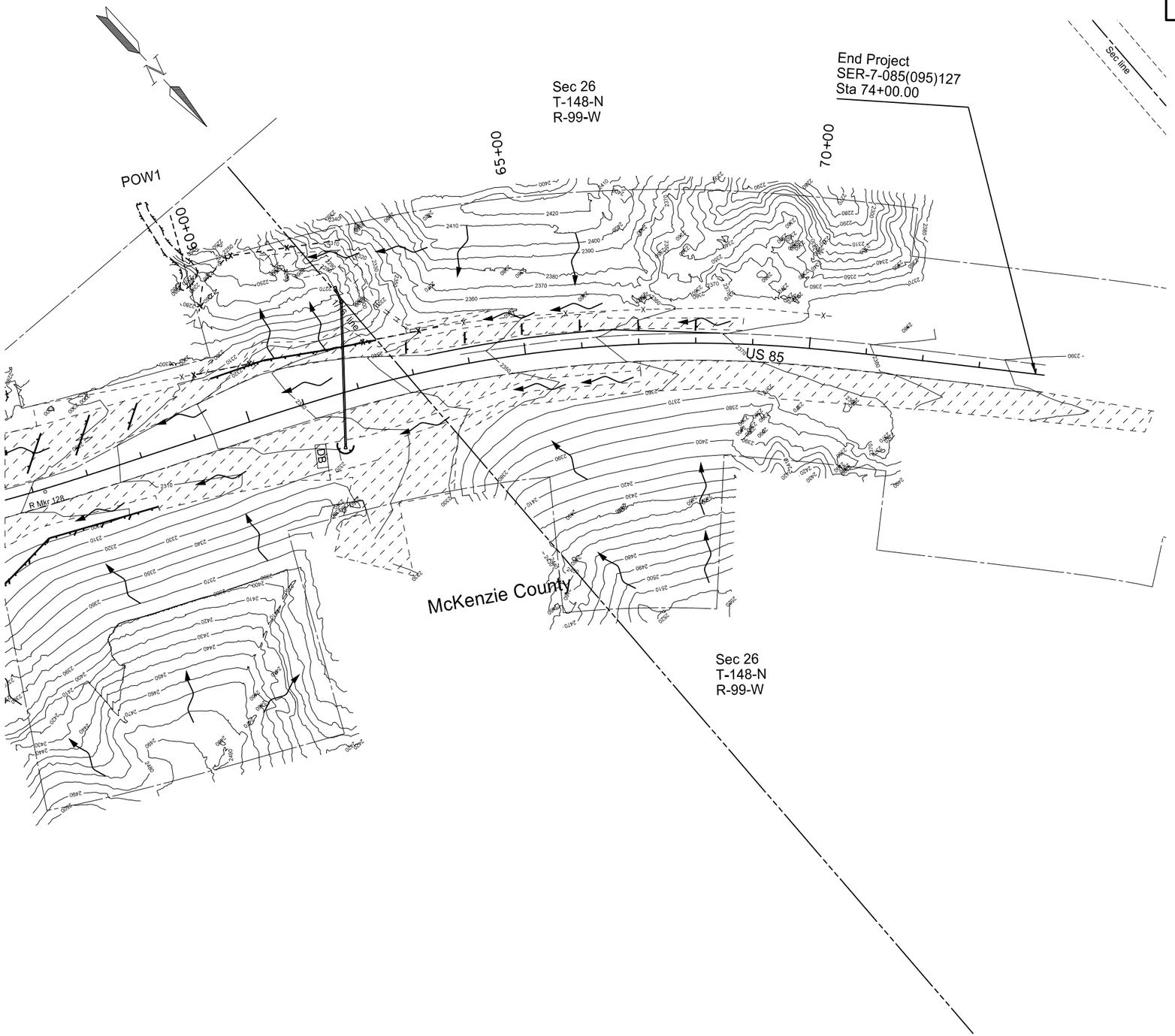

Silt Fence Supported	
Left	300 LF

Fiber Roll 12 IN - Temporary	
Sta. 62+00 Lt	630 LF
Sta. 62+00 Rt	50 LF

Remove Silt Fence Supported	
Left	300 LF

Remove Fiber Roll 12 IN	
Sta. 62+00 Lt	630 LF
Sta. 62+00 Rt	50 LF

x- - - - - Silt Fence

Fiber Rolls

Temporary Seeding Area

This document was originally issued and sealed by Brian J. Rosin Registration Number PE- 2928, on 8/27/2014 and the original document is stored at the North Dakota Department of Transportation

Temporary Erosion Control

Slope Repairs/Jacked or Bored Pipe

1 Mile North of Long-X Bridge

STATE	PROJECT NO.	SECTION NO.	SHEET NO.
ND	SER-7-085(095)127	77	1

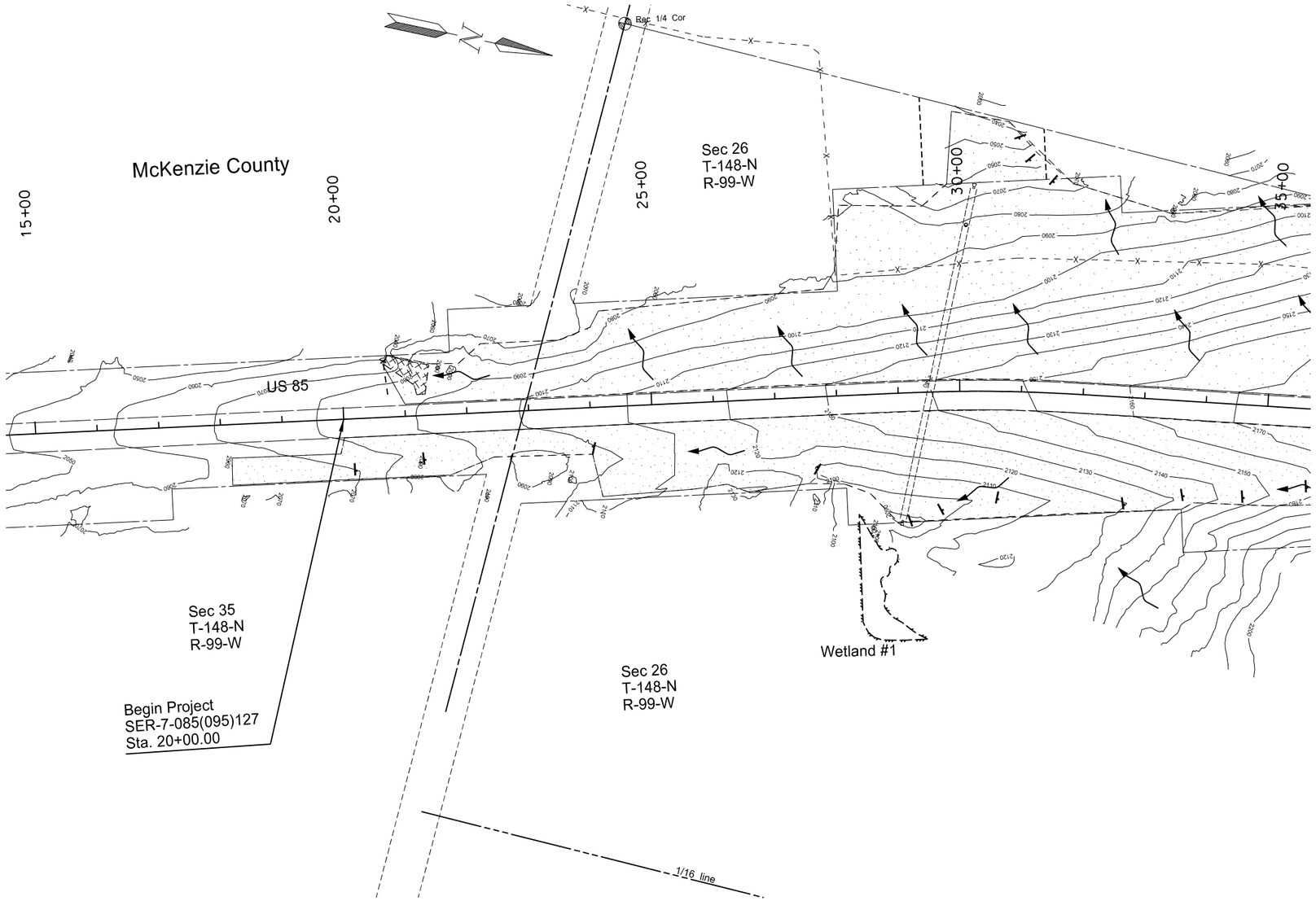

Fiber Roll 12 IN - Permanent	
Left	60 LF
Right	200 LF

TRM Type 1	
Left	255 SY

x- - - - Silt Fence

Fiber Rolls

Permanent Seeding Area

TRM Type 1

This document was originally issued and sealed by Brian J. Rosin Registration Number PE- 2928, on 8/27/2014 and the original document is stored at the North Dakota Department of Transportation

Permanent Erosion Control

Slope Repairs/Jacked or Bored Pipe

1 Mile North of Long-X Bridge

STATE	PROJECT NO.	SECTION NO.	SHEET NO.
ND	SER-7-085(095)127	77	2

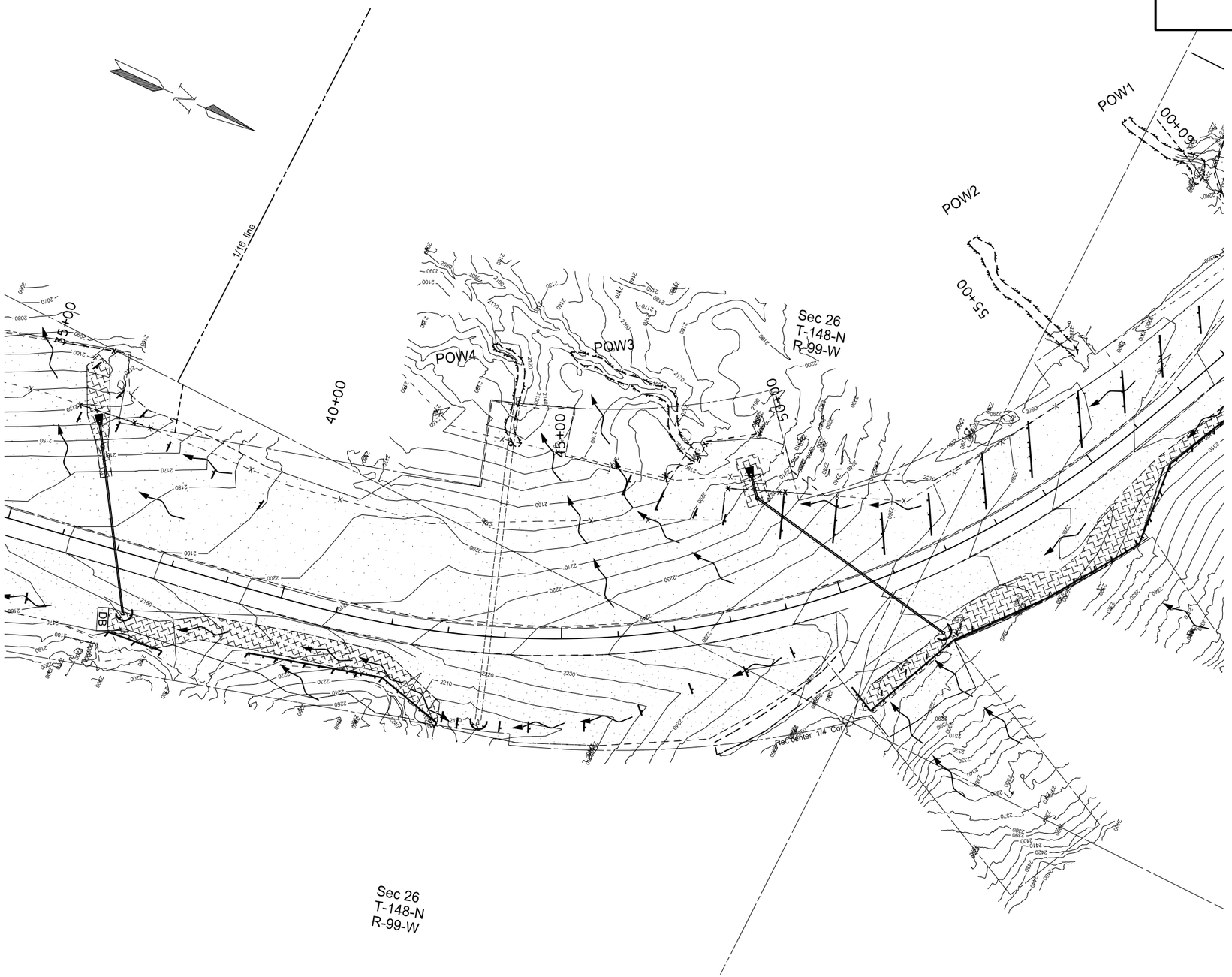

TRM Type 1

Sta. 36+00 Lt	735 SY
Sta. 36+00 Rt	2900 SY
Sta. 49+00 Lt	395 SY
Sta. 49+00 Rt	4000 SY

Riprap Grade II

Sta. 36+00 Lt	20 CY
Sta. 49+00 Lt	20 CY

Geosynthetic Material Type RR

Sta. 36+00 Lt	35 SY
Sta. 49+00 Lt	35 SY

Fiber Roll 12 IN - Permanent

Sta. 36+00 Lt	180 LF
Sta. 36+00 Rt	745 LF
Sta. 49+00 Lt	740 LF
Sta. 49+00 Rt	1300 LF

x- - - - - Silt Fence

Fiber Rolls

Permanent Seeding Area

TRM Type 1

This document was originally issued and sealed by Brian J. Rosin Registration Number PE- 2928, on 8/27/2014 and the original document is stored at the North Dakota Department of Transportation

Permanent Erosion Control

Slope Repairs/Jacked or Bored Pipe

1 Mile North of Long-X Bridge

STATE	PROJECT NO.	SECTION NO.	SHEET NO.
ND	SER-7-085(095)127	77	3

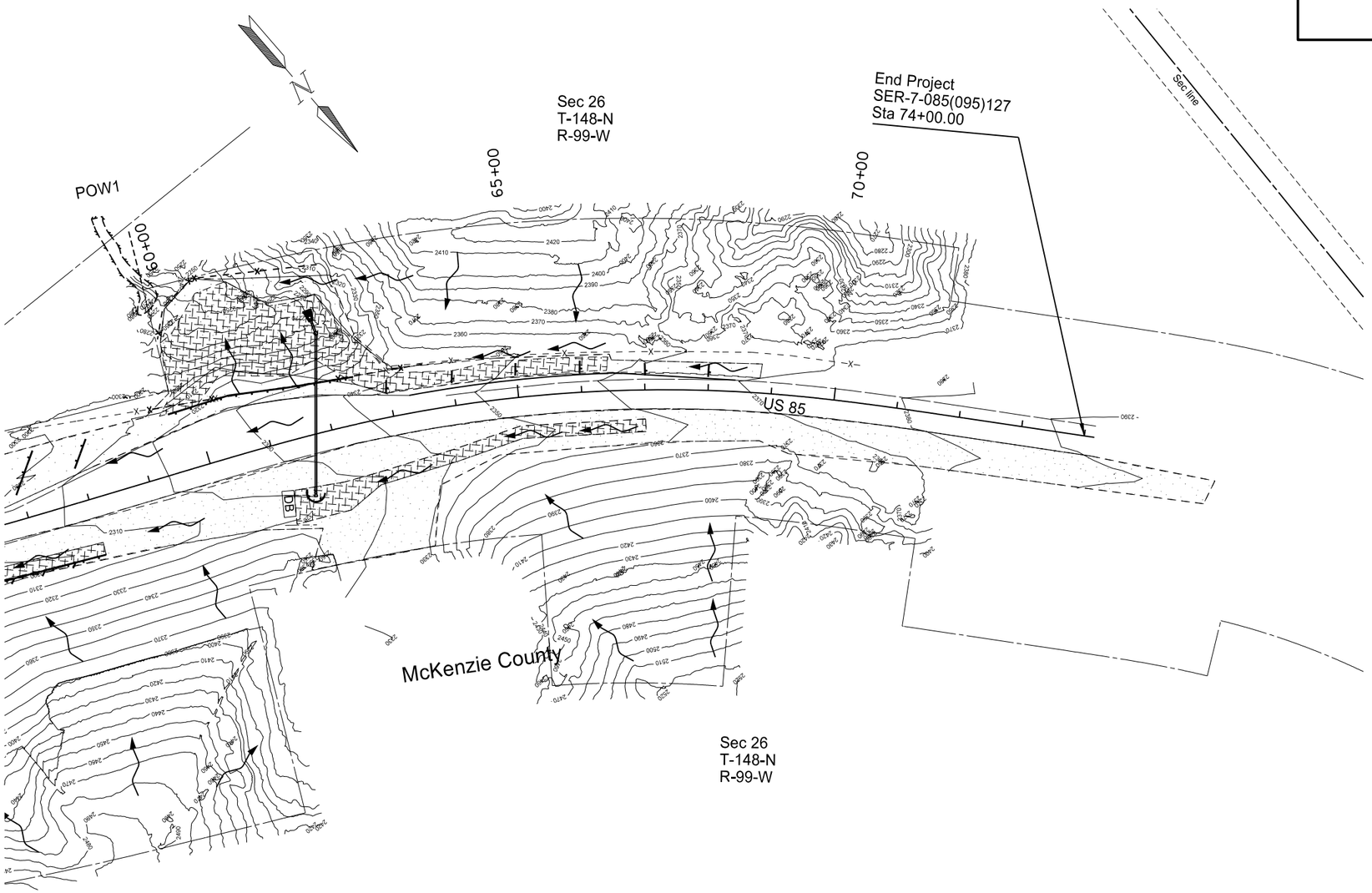

Fiber Roll 12 IN - Permanent

Sta. 62+00 Lt	630 LF
Sta. 62+00 Rt	50 LF

TRM Type 1

Sta. 62+00 Lt	5165 SY
Sta. 62+00 Rt	1630 SY

Riprap Grade II

Sta. 62+00 Lt	20 CY

Geosynthetic Material Type RR

Sta. 62+00 Lt	35 SY

x- - - - - Silt Fence

Fiber Rolls

Permanent Seeding Area

TRM Type 1

This document was originally issued and sealed by Brian J. Rosin Registration Number PE- 2928, on 8/27/2014 and the original document is stored at the North Dakota Department of Transportation

Permanent Erosion Control

Slope Repairs/Jacked or Bored Pipe

1 Mile North of Long-X Bridge

STATE	PROJECT NO.	SECTION NO.	SHEET NO.
ND	SER-7-085(095)127	100	1

SIGN NUMBER	SIGN SIZE	DESCRIPTION	AMOUNT REQUIRED	UNITS PER AMOUNT	UNITS SUB TOTAL
D3-36	36"x6"	STREET NAME SIGN (Sign and installation only)		6	
G20-1-60	60"x24"	ROAD WORK NEXT __ MILES		34	
G20-1b-60	60"x24"	WORK IN PROGRESS/ NO WORK IN PROGRESS (Sign and installation only)		26	
G20-2-48	**48"x24"**	**END ROAD WORK**	**6**	**19**	**114**
G20-4-36	36"x18"	PILOT CAR FOLLOW ME (Mounted to back of pilot car)		18	
G20-10-108	**108"x48"**	**CONTRACTOR SIGN**	**2**	**64**	**128**
G20-50a-72	72"x36"	ROAD WORK NEXT __ MILES RT & LT ARROWS		37	
G20-52a-72	72"x24"	ROAD WORK NEXT __ MILES RT or LT ARROW		30	
G20-55-96	**96"x48"**	**SPEED LIMIT ENFORCED - MINIMUM FEE $80 WHEN WORKERS PRESENT**	**4**	**59**	**236**
M1-1-36	36"x36"	INTERSTATE ROUTE MARKER (Post and installation only)		10	
M1-4-24	24"x24"	U.S. ROUTE MARKER (Post and installation only)		10	
M1-5-24	24"x24"	STATE ROUTE MARKER (Post and installation only)		10	
M3-1-24	24"x12"	NORTH (Mounted on route marker post)		7	
M3-2-24	24"x12"	EAST (Mounted on route marker post)		7	
M3-3-24	24"x12"	SOUTH (Mounted on route marker post)		7	
M3-4-24	24"x12"	WEST (Mounted on route marker post)		7	
M4-8-24	24"x12"	DETOUR (Mounted on route marker post)		7	
M4-9-30	30"x24"	DETOUR ARROW RIGHT or LEFT/AHD AND RT or LT		15	
M4-10-48	48"x18"	DETOUR ARROW RIGHT or LEFT		23	
M5-1-21	21"x15"	ARROW AHD AND RT or LT(Mounted on route marker post)		7	
M5-2-21	21"x15"	ARROW AHD UP & RT or LT (Mounted on route marker post)		7	
M6-1-21	21"x15"	ARROW RT or LT (Mounted on route marker post)		7	
M6-2-21	21"x15"	ARROW UP & RT or LT (Mounted on route marker post)		7	
M6-3-21	21"x15"	ARROW AHD (Mounted on route marker post)		7	
R1-1-48	**48"x48"**	**STOP**	**4**	**32**	**128**
R1-1a-18	**18"x18"**	**STOP and SLOW PADDLE Back to Back**	**2**	**5**	**10**
R1-2-60	60"x60"	YIELD		29	
R2-1-48	**48"x60"**	**SPEED LIMIT __**	**10**	**39**	**390**
R2-1a-24	**24"x18"**	**MINIMUM FEE $80 (Mounted on Speed Limit post)**	**3**	**10**	**30**
R3-7-48	48"x48"	LEFT or RIGHT LANE MUST TURN LEFT or RIGHT		35	
R4-1-48	**48"x60"**	**DO NOT PASS**	**2**	**39**	**78**
R4-7-48	48"x60"	KEEP RIGHT SYMBOL		39	
R5-1-48	48"x48"	DO NOT ENTER		35	
R6-1-36	36"x12"	ONE WAY RIGHT or LEFT		13	
R7-1-12	12"x18"	NO PARKING		11	
R10-6-24	24"x36"	STOP HERE ON RED		16	
R11-2-48	48"x30"	ROAD CLOSED		28	
R11-2a-48	48"x30"	STREET CLOSED		28	
R11-3a-60	60"x30"	ROAD CLOSED __ MILES AHEAD LOCAL TRAFFIC ONLY		31	
R11-3c-60	60"x30"	STREET CLOSED __ MILES AHEAD LOCAL TRAFFIC ONLY		31	
R11-4a-60	60"x30"	STREET CLOSED TO THRU TRAFFIC		31	
W1-3-48	48"x48"	RIGHT or LEFT SHARP REVERSE CURVE ARROW		35	
W1-4-48	48"x48"	RIGHT or LEFT REVERSE CURVE ARROW		35	
W1-4b-48	48"x48"	DOUBLE RIGHT or LEFT REVERSE CURVE ARROW		35	
W1-6-48	48"x24"	LARGE ARROW		26	
W3-1-48	48"x48"	STOP AHEAD SYMBOL		35	
W3-3-48	48"x48"	SIGNAL AHEAD SYMBOL		35	
W3-4-48	48"x48"	BE PREPARED TO STOP		35	
W3-5-48	**48"x48"**	**SPEED REDUCTION AHEAD**	**6**	**35**	**210**
W4-2-48	48"x48"	RIGHT or LEFT LANE TRANSITION SYMBOL		35	
W5-1-48	**48"x48"**	**ROAD NARROWS**	**2**	**35**	**70**
W5-8-48	48"x48"	THRU TRAFFIC RIGHT LANE		35	
W5-9-48	48"x48"	ROAD WORK TRAFFIC ONLY DOWN & LT or RT ARROW		35	
W6-3-48	48"x48"	TWO WAY TRAFFIC SYMBOL		35	
W8-1-48	**48"x48"**	**BUMP**	**1**	**35**	**35**
W8-3-48	48"x48"	PAVEMENT ENDS		35	
W8-7-48	48"x48"	LOOSE GRAVEL		35	
W8-9a-48	48"x48"	SHOULDER DROP-OFF		35	
W8-11-48	**48"x48"**	**UNEVEN LANES**	**2**	**35**	**70**
W8-12-48	48"x48"	NO CENTER STRIPE		35	
W8-53-48	48"x48"	TRUCKS ENTERING HIGHWAY		35	
W8-54-48	**48"x48"**	**TRUCKS ENTERING AHEAD or __ FT.**	**4**	**35**	**140**
W8-55-48	**48"x48"**	**TRUCKS CROSSING AHEAD or __ FT.**	**2**	**35**	**70**
W8-56-48	48"x48"	TRUCKS EXITING HIGHWAY		35	
W9-3a-48	48"x48"	CENTER LANE CLOSED SYMBOL		35	
W12-2-48	48"x48"	LOW CLEARANCE SYMBOL		35	
W13-1-24	24"x24"	__ MPH ADVISORY SPEED PLATE (Mounted on warning sign post)		11	
W13-4-48	48"x60"	RAMP ARROW		39	
W14-3-48	48"x36"	NO PASSING ZONE		23	
W20-1-48	**48"x48"**	**ROAD WORK AHEAD or _FT or _ MILE**	**6**	**35**	**210**
W20-2-48	48"x48"	DETOUR AHEAD or __ FT		35	
W20-3-48	48"x48"	ROAD or STREET CLOSED AHEAD or __ FT.		35	
W20-4-48	**48"x48"**	**ONE LANE ROAD AHEAD or __ FT.**	**2**	**35**	**70**
W20-5-48	48"x48"	RIGHT or LEFT LANE CLOSED AHEAD or __ FT.		35	
W20-7a-48	**48"x48"**	**FLAGGING SYMBOL**	**2**	**35**	**70**
W20-7k-24	**24"x18"**	**__ FEET (Mounted on warning sign post)**	**2**	**10**	**20**
W20-8-48	48"x48"	STREET CLOSED		35	
W20-51-48	48"x48"	EQUIPMENT WORKING		35	
W20-52-54	**54"x12"**	**NEXT __ MILES (Mounted on warning sign post)**	**2**	**12**	**24**
W21-1a-48	48"x48"	WORKERS SYMBOL		35	
W21-2-48	**48"x48"**	**FRESH OIL**	**1**	**35**	**35**
W21-3-48	48"x48"	ROAD MACHINERY AHEAD or __ FT		35	

SIGN NUMBER	SIGN SIZE	DESCRIPTION	AMOUNT REQUIRED	UNITS PER AMOUNT	UNITS SUB TOTAL
W21-5-48	**48"x48"**	**SHOULDER WORK**	**2**	**35**	**70**
W21-5a-48	48"x48"	RIGHT or LEFT SHOULDER CLOSED		35	
W21-5b-48	48"x48"	RIGHT or LEFT SHOULDER CLOSED AHEAD or __ FT.		35	
W21-6a-48	48"x48"	SURVEY CREW AHEAD		35	
W21-50-48	48"x48"	BRIDGE PAINTING AHEAD or __ FT.		35	
W21-51-48	48"x48"	MATERIAL ON ROADWAY		35	
W22-8-48	48"x48"	FRESH OIL LOOSE ROCK		35	
	24"x24"	TAKE TURNS (6" D letters) (Mounted on stop sign post)		11	

SPECIAL SIGNS

SPEC & CODE

704-1000	**TRAFFIC CONTROL SIGNS**	**TOTAL UNITS**	**2208**

SPEC & CODE	DESCRIPTION	UNIT	QUANTITY
704-0100	**FLAGGING**	**MHR**	**300**
704-1041	ATTENUATION DEVICE-TYPE B-55	EACH	
704-1043	ATTENUATION DEVICE-TYPE B-65	EACH	
704-1044	ATTENUATION DEVICE-TYPE B-70	EACH	
704-1050	TYPE I BARRICADES	EACH	
704-1051	TYPE II BARRICADES	EACH	
704-1052	**TYPE III BARRICADES**	**EACH**	**3**
704-1060	**DELINEATOR DRUMS**	**EACH**	**20**
704-1065	TRAFFIC CONES	EACH	
704-1067	**TUBULAR MARKERS**	**EACH**	**34**
704-1070	DELINEATOR	EACH	
704-1072	FLEXIBLE DELINEATORS	EACH	
704-1081	VERTICAL PANELS - BACK TO BACK	EACH	
704-1085	SEQUENCING ARROW PANEL - TYPE A	EACH	
704-1086	SEQUENCING ARROW PANEL - TYPE B	EACH	
704-1087	SEQUENCING ARROW PANEL - TYPE C	EACH	
704-1088	SEQUENCING ARROW PANEL - TYPE C - CROSSOVER	EACH	
704-1095	TYPE B FLASHERS	EACH	
704-3501	PORTABLE PRECAST CONCRETE MED BARRIER	LF	
704-3510	PRECAST CONCRETE MED BARRIER - STATE FURNISHED	EACH	
762-0200	RAISED PAVEMENT MARKERS	EACH	
762-0420	SHORT TERM 4IN LINE - TYPE R	LF	
762-0430	SHORT TERM 4IN LINE - TYPE NR	LF	
762-1500	OBLITERATION OF PVMT MK	SF	
772-2110	FLASHING BEACON - POST MOUNTED	EACH	

NOTE:
If additional signs are required, units will be calculated using the formula from Section III-19.06 of the Design Manual.
http://www.dot.nd.gov/

This document was originally issued and sealed by Brian J. Rosin, Registration Number PE-2928, on 8/27/14 and the original document is stored at the North Dakota Department of Transportation.

Traffic Control Devices List

STATE	PROJECT NO.	SECTION NO.	SHEET NO.
ND	SER-7-085(095)127	100	2

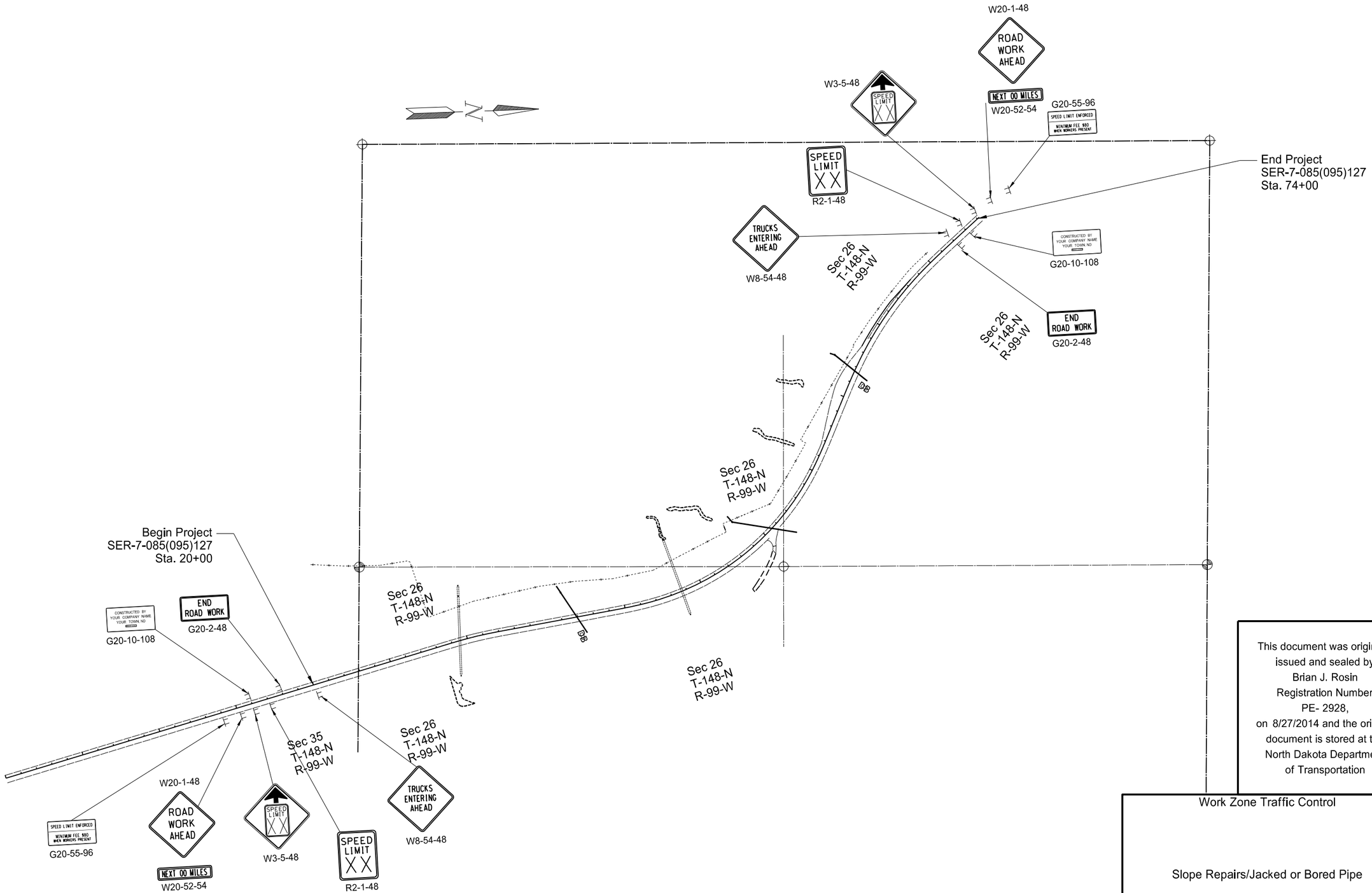

This document was originally issued and sealed by Brian J. Rosin Registration Number PE- 2928, on 8/27/2014 and the original document is stored at the North Dakota Department of Transportation

Work Zone Traffic Control

Slope Repairs/Jacked or Bored Pipe

1 Mile North of Long-X Bridge

STATE	PROJECT NO.	SECTION NO.	SHEET NO.
ND	SER-7-085(095)127	110	1

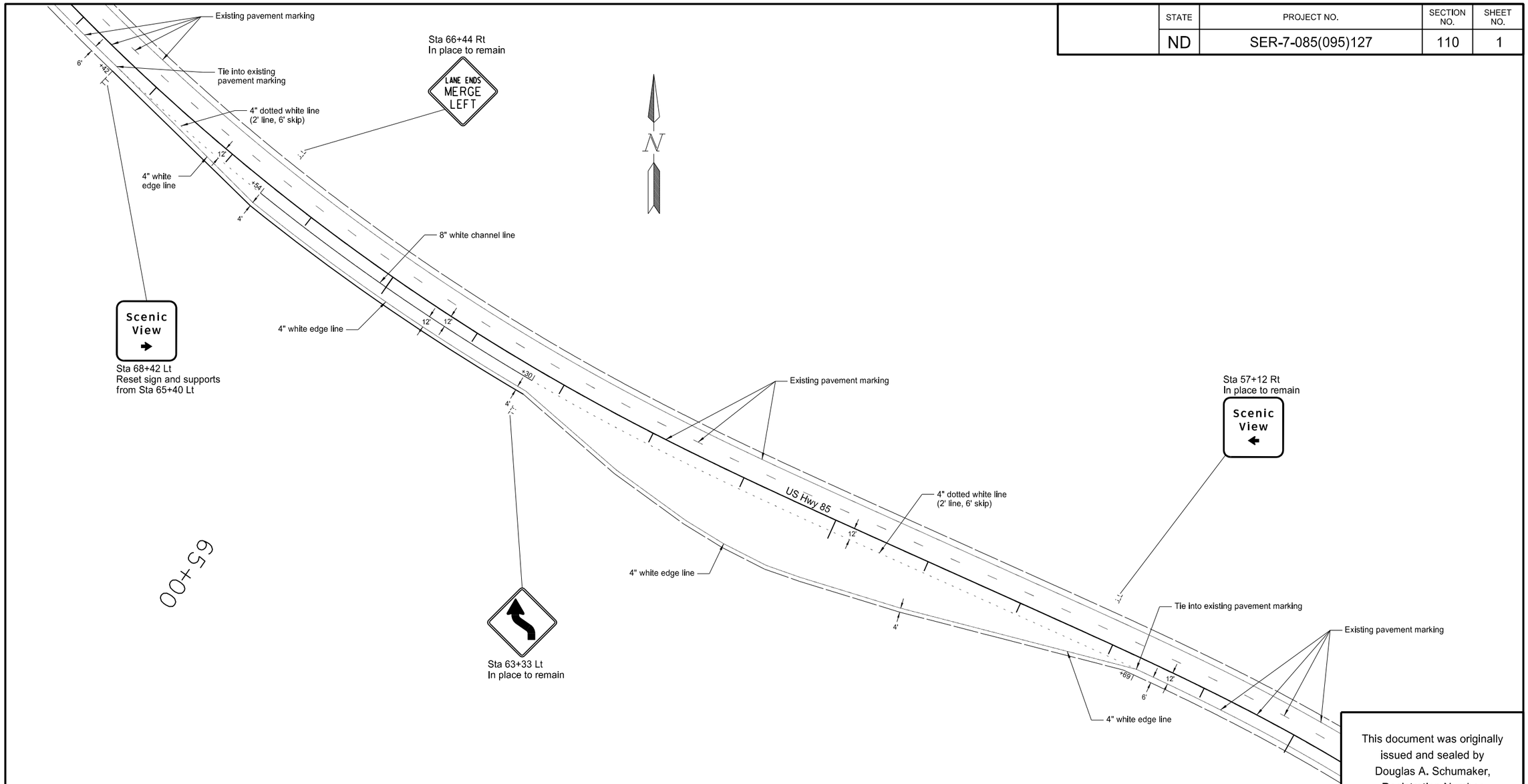

Reset sign panel	
Sta 68+42 Lt	1 EA

Reset sign support	
Sta 68+42 Lt	2 EA

Pvmt mk painted 4in line	
4" white edge line	1193 LF
4" white dotted line (2' line, 6' skip)	210 LF
Total	1403 LF

Pvmt mk painted 8in line	
8" white channel line	324 LF

This document was originally issued and sealed by Douglas A. Schumaker, Registration Number PE- 5047, on 05/15/14 and the original document is stored at the North Dakota Department of Transportation

Signing and Pavement Marking Layout

Scenic Overlook

US Highway 85

NDDOT ABBREVIATIONS

D-101-1

□	This is a special text character used in the labeling of existing features. It indicates a feature that has an unknown characteristic, potentially based on: lack of description, location accuracy or purpose.
Abn	abandoned
Abut	abutment
Ac	acres
Adj	adjusted
Aggr	aggregate
Ahd	ahead
ARV	air release valve
Align	alignment
Al	alley
Alt	alternate
Alum	aluminum
ADA	Americans with Disabilities Act
A	ampere
&	and
Appr	approach
Approx	approximate
ACP	asbestos cement pipe
Asph	asphalt
AC	asphalt cement
Assmd	assumed
@	at
Atten	attenuation
ATR	automatic traffic recorder
Ave	Avenue
Avg	average
ADT	average daily traffic
Az	azimuth
Bk	back
BF	back face
Bs	backsight
Balc	balcony
B Wire	barbed wire
Barr	barricade
Btry	battery
Brg	bearing
BI	beehive inlet
Beg	begin
BM	bench mark
Bkwy	bikeway
Bit	bituminous
Blk	block
Bd Ft	board feet
BH	bore hole
BS	both sides
Bot	bottom
Blvd	Boulevard
Bndry	boundary
BC	brass cap
Brkwy	breakaway
Br	bridge
Bldg	building
BV	butterfly valve
Byp	bypass
C Gdrl	cable guardrail
Calc	calculate
Cd	candela
CIP	cast iron pipe
CB	catch basin
CRS	cationic rapid setting
C Gd	cattle guard
C To C	center to center
Cl or ℄	centerline
Cm	centimeter
Ch	chain
Chnlk	chain-link
Ch Blk	channel block
Ch Ch	channel change
Chk	check
Chsld	chiseled
Cir	circle
Cl	class
Cl	clay
Cl F	clay fill
Cl Hvy	clay heavy
Cl Lm	clay loam
Clnt	clean-out
Clr	clear
Cl&gr	clearing & grubbing
Co S	coal slack
Comb.	combination
Coml	commercial
Compr	compression
CADD	computer aided drafting & design
Conc	concrete
Cond	conductor
Const	construction
Cont	continuous
CSB	continuous split barrel sample
Contr	contraction
Contr	contractor
CP	control point
Coord	coordinate
Cor	corner
Corr	corrected
CAES	corrugated aluminum end section
CAP	corrugated aluminum pipe
CMES	corrugated metal end section
CMP	corrugated metal pipe
CPVCP	corrugated poly-vinyl chloride pipe
CSES	corrugated steel end section
CSP	corrugated steel pipe
C	coulomb
Co	County
Crse	course
C Gr	course gravel
CS	course sand
Ct	Court
Xarm	cross arm
Xbuck	cross buck
Xsec	cross sections
Xing	crossing
Xrd	Crossroad
Crn	crown
CF	cubic feet
M3	cubic meter
M3/s	cubic meters per second
CY	cubic yard
Cy/mi	cubic yards per mile
Culv	culvert
C&G	curb & gutter
CI	curb inlet
CR	curb ramp
CS	curve to spiral
C	cut
Dd Ld	dead load
Defl	deflection
Defm	deformed
Deg or D	degree
Dlnt	delineate
Dlntr	delineator
Depr	depression
Desc	description
Det	detail
DWP	detectable warning panel
Dtr	detour
Dia	diameter
Dir	direction
Dist	distance
DM	disturbed material
DB	ditch block
DG	ditch grade
Dbl	double
Dn	down
Dwg	drawing
Dr	drive
Drwy	driveway
DI	drop inlet
D	dry density
Ea	each
Esmt	easement
E	East
EB	Eastbound
Elast	elastomeric
EL	electric locker
E Mtr	electric meter
Elec	electric/al
EDM	electronic distance meter
Elev or El	elevation
Ellipt	elliptical
Emb	embankment
Emuls	emulsion/emulsified
ES	end section
Engr	engineer
ESS	environmental sensor station
Eq	equal
Eq	equation
Evgr	evergreen
Exc	excavation
Exst	existing
Exp	expansion
Expy	Expressway
E	external of curve
Extru	extruded
FOS	factor of safety
F	Fahrenheit
FS	far side
F	farad
Fed	Federal
FP	feed point
Ft	feet/foot
Fn	fence
Fn P	fence post
FO	fiber optic
FB	field book
FD	field drive
F	fill
FAA	fine aggregate angularity
FS	fine sand
FH	fire hydrant
Fl	flange
Flrd	flared
FES	flared end section
F Bcn	flashing beacon
FA	flight auger sample
FL	flow line
Ftg	footing
FM	force main
Fs	foresight
Fnd	found
Fdn	foundation
Frac	fractional
Frwy	freeway
Frt	front
FF	front face
F Disp	fuel dispenser

NORTH DAKOTA DEPARTMENT OF TRANSPORTATION	
07-01-14	
REVISIONS	
DATE	CHANGE

This document was originally issued and sealed by Roger Weigel, Registration Number PE- 2930, on 07/01/14 and the original document is stored at the North Dakota Department of Transportation

NDDOT ABBREVIATIONS

D-101-2

FFP	fuel filler pipes
FLS	fuel leak sensor
Furn	furnish/ed
Gal	gallon
Galv	galvanized
Gar	garage
Gs L	gas line
G Reg	gas line regulator
GMV	gas main valve
G Mtr	gas meter
GSV	gas service valve
GVP	gas vent pipe
GV	gate valve
Ga	gauge
Geod	geodetic
GIS	Geographical Information System
G	giga
GPS	Global Positioning System
Gov	government
Grd	graded/grade
Gr	gravel
Grnd	ground
GWM	ground water monitor
Gdrl	guardrail
Gtr	gutter
H Plg	H piling
Hdwl	headwall
Ha	hectare
Ht	height
HI	height of instrument
Hel	helical
H	henry
Hz	hertz
HDPE	high density polyethylene
HM	high mast
HP	high pressure
HPS	high pressure sodium
Hwy	highway
Hor	horizontal
HBP	hot bituminous pavement
Hr	hour(s)
Hyd	hydrant
Ph	hydrogen ion content
Id	identification
In or "	inch
Incl	inclinometer tube
IMH	inlet manhole
ID	inside diameter
Inst	instrument
Intchg	interchange
Intmdt	intermediate
Intscn	intersection
Inv	invert
IM	iron monument
I Pn	Iron Pin

IP	iron Pipe
Jt	joint
J	joule
Jct	junction
K	kelvin
Kn	kilo newton
Kpa	kilo pascal
Kg	kilogram
Kg/m3	kilogram per cubic meter
Km	kilometer
K	Kip(s)
LS	Land Surveyor (licensed)
LSIT	Land Surveyor In Training
Ln	lane
Lg	large
Lat	latitude
Lt	left
L	length of curve
Lens	lenses
Lvl	level
LB	level book
Lvlng	leveling
Lht	light
LP	light pole
Ltg	lighting
Lig Co	lignite coal
Lig Sl	lignite slack
LF	linear foot
Liq	liquid
LL	liquid limit
L	litre
Lm	loam
Loc	location
LC	long chord
Long.	longitude
Lp	loop
LD	loop detector
Lm	lumen
Lum	luminaire
L Sum	lump sum
Lx	lux
ML	main line
M Hr	man hour
MH	manhole
Mkd	marked
Mkr	marker
Mkg	marking
MA	mast arm
Matl	material
Max	maximum
MC	meander corner
Meas	measure
Mdn	median
MD	median drain
MC	medium curing

M	mega
Mer	meridian
M	meter
M/s	meters per second
M	mid ordinate of curve
Mi	mile
MM	mile marker
MP	mile post
Ml	milliliter
Mm	millimeter
Mm/hr	millimeters per hour
Min	minimum
Misc	miscellaneous
Mon	monument
Mnd	mound
Mtbl	mountable
Mtd	mounted
Mtg	mounting
Mk	muck
Mun	municipal
N	nano
NGS	National Geodetic Survey
NS	near side
Neop	neoprene
Ntwk	network
N	newton
N	North
NE	North East
NW	North West
NB	Northbound
No. or #	number
Obsc	obscure(d)
Obsn	observation
Ocpd	occupied
Ocpy	occupy
Off Loc	office location
O/s	offset
OC	on center
C	one dimensional consolidation
OC	organic content
Orig	original
O To O	out to out
OD	outside diameter
OH	overhead
PMT	pad mounted transformer
Pg	pages
Pntd	painted
Pr	pair
Pnl	panel
Pk	park
PK	Parker-Kalon nail
Pa	pascal
PSD	passing sight distance
Pvmt	pavement
Ped	pedestal

Ped	pedestrian
PPP	pedestrian pushbutton post
Pen.	penetration
Perf	perforated
Per.	perimeter
PL	pipeline
Pl	place
P&P	plan & profile
PL	plastic limit
Pl	plate
Pt	point
PCC	point of compound curve
PC	point of curve
PI	point of intersection
PRC	point of reverse curvature
PT	point of tangent
POC	point on curve
POT	point on tangent
PE	polyethylene
PVC	polyvinyl chloride
PCC	Portland Cement concrete
Lb or #	pounds
PP	power pole
Preempt	preemption
Prefab	prefabricated
Prfmd	preformed
Prep	preperation
Press.	pressure
PRV	pressure relief valve
Prestr	prestressed
Pvt	private
PD	private drive
Prod.	production/produce
Prog	programmed
Prop.	property
Prop Ln	property line
Ppsd	proposed
PB	pull box

NORTH DAKOTA DEPARTMENT OF TRANSPORTATION	
07-01-14	
REVISIONS	
DATE	CHANGE

This document was originally issued and sealed by Roger Weigel, Registration Number PE- 2930, on 07/01/14 and the original document is stored at the North Dakota Department of Transportation

NDDOT ABBREVIATIONS

D-101-3

Qty	quantity
Qtr	quarter
Rad or R	radius
RR	railroad
Rlwy	railway
Rsd	raised
RTP	random traverse point
Rge or R	range
RC	rapid curing
Rec	record
Rcy	recycle
RPCC	recycled Portland cement concrete
Ref	reference
R Mkr	reference marker
RM	reference monument
Refl	reflectorized
RCB	reinforced concrete box
RCES	reinforced concrete end section
RCP	reinforced concrete pipe
RCPS	reinforced concrete pipe sewer
Reinf	reinforcement
Res	reservation
Ret	retaining
Rev	reverse
Rt	right
R/W	right of way
Riv	river
Rd	road
Rdbd	road bed
Rdwy	roadway
RWIS	Roadway Weather Information System
Rk	rock
Rt	route
Salv	salvage(d)
Sd	sand
Sdy Cl	sandy clay
Sdy Cl Lm	sandy clay loam
Sdy Fl	sandy fill
Sdy Lm	sandy loam
San	sanitary sewer line
Sc	scoria
Sec	seconds
Sec	section
SL	section line
Sep	separation
Seq	sequence
Serv	service
Sh	shale
Sht	sheet
Shtng	sheeting
Shldr	shoulder
Sw	sidewalk
S	siemens
SD	sight distance
SN	sign number
Sig	signal
Si Cl	silt clay
Si Cl Lm	silty clay loam
Si Lm	silty loam
Sgl	single
SC	slow curing
SS	slow setting
Sm	small
S	South
SE	South East
SW	South West
SB	Southbound
Sp	spaces
Spcl	special
SA	special assembly
SP	special provisions
G	specific gravity
Spk	spike
SC	spiral to curve
ST	spiral to tangent
SB	split barrel sample
SH	sprinkler head
SV	sprinkler valve
Sq	square
SF	square feet
Km2	square kilometer
M2	square meter
SY	square yard
Stk	stake
Std	standard
N	standard penetration test
Std Specs	Standard Specifications
Sta	station
Sta Yd	station yards
Stm L	steam line
SEC	steel encased concrete
SSD	stopping sight distance
SD	storm drain
St	street
SPP	structural plate pipe
SPPA	structural plate pipe arch
Str	structure
Subd	subdivision
Sub	subgrade
Sub Prep	subgrade preperation
Ss	subsoil
SE	superelevation
SS	supplement specification
Supp	supplemental
Surf	surfacing
Surv	survey
Sym	symmetrical
SI	Systems International
Tan	tangent
T	tangent (semi)
TS	tangent to spiral
Tel	telephone
Tel B	Telephone Booth
Tel P	telephone pole
Tv	television
Temp	temperature
Temp	temporary
TBM	temporary bench mark
T	tesla
T	thinwall tube sample
T/mi	tons per mile
Ts	topsoil
Twp or T	township
Traf	traffic
TSCB	traffic signal control box
Tr	trail
Transf	transformer
TB	transit book
Trans	transition
TT	transmission tower
Trans	transverse
Trav	traverse
TP	traverse point
Trtd	treated
Trmt	treatment
Qc	triaxial compression
TERO	tribal employment rights ordinance
Tpl	triple
TP	turning point
Typ	typical
Qu	unconfined compressive strength
Ugrnd	underground
USC&G	US Coast & Geodetic Survey
USGS	US Geologic Survey
Util	utility
VG	valley gutter
Vap	vapor
Vert	vertical
VC	vertical curve
VCP	vitrified clay pipe
V	volt
Vol	volume
Wkwy	walkway
W	water content
WGV	water gate valve
WL	water line
WM	water main
WMV	water main valve
W Mtr	water meter
WSV	water service valve
WW	water well
W	watt
Wrng	wearing
Wb	weber
WIM	Weigh In Motion
W	West
WB	Westbound
Wrng	wiring
W/	with
W/o	without
WC	witness corner
WGS	World Geodetic System
Z	zenith

NORTH DAKOTA DEPARTMENT OF TRANSPORTATION	
07-01-14	
REVISIONS	
DATE	CHANGE

This document was originally issued and sealed by Roger Weigel, Registration Number PE- 2930, on 07/01/14 and the original document is stored at the North Dakota Department of Transportation

NDDOT UTILITY COMPANY AND ORGANIZATION ABBREVIATIONS

D-101-10

702COM	702 Communications
ACCENT	Accent Communications
AGASSIZ WU	Agassiz Water Users Incorporated
AGC	Assiociated General Contractors of America
All Pl	Alliance Pipeline
ALL SEAS WU	All Seasons Water Users Association
AMOCO Pl	Amoco Pipeline Company
AMRDA HESS	Amerada Hess Corporation
AT&T	AT&T Corporation
B PAW	Bear Paw Energy Incorporated
BAKER ELEC	Baker Electric
BASIN ELEC	Basin Electric Cooperative Incorporated
BEK TEL	Bek Communications Cooperative
BELLE PL	Belle Fourche Pipeline Company
BLM	Bureau of Land Management
BNSF	Burlington Northern Santa Fe Railway
BOEING	Boeing
BRNS RWD	Barnes Rural Water District
BURK-DIV ELEC	Burke-Divide Electric Cooperative
BURL WU	Burleigh Water Users
Cable One	Cable One
CABLE SERV	Cable Services
CAP ELEC	Capital Electric Cooperative Incorporat
CASS CO ELEC	Cass County Electric Cooperative
CASS RWU	Cass Rural Water Users Incorporated
CAV ELEC	Cavalier Rural Electric Cooperative
CBLCOM	Cablecom Of Fargo
CENEX PL	Cenex Pipeline
CENT PL WATER DIST	Central Pipe Line Water District
CENT PWR ELEC	Central Power Electric Cooperative
COE	Corps of Engineers
CONS TEL	Consolidated Telephone
CONT RES	Continental Resource Inc
CPR	Canadian Pacific Railway
D O E	Department Of Energy
DAK CARR	Dakota Carrier Network
DAK CENT TEL	Dakota Central Telephone
DAK RWD	Dakota Rural Water District
DGC	Dakota Gasification Company
DICKEY R NET	Dickey Rural Networks
DICKEY RWU	Dickey Rural Water Users Association
DICKEY TEL	Dickey Telephone
DNRR	Dakota Northern Railroad
DOME PL	Dome Pipeline Company
DVELEC	Dakota Valley Electric Cooperative
DVMW	Dakota, Missouri Valley & Western
ENBRDG	Enbridge Pipelines Incorporated
ENVENTIS	Enventis Telephone
FALK MNG	Falkirk Mining Company
FHWA	Federal Highway Administration
G FKS-TRL WD	Grand Forks-traill Water District
GETTY TRD & TRAN	Getty Trading & Transportation
GLDN W ELEC	Golden West Electric Cooperative
GRGS CO TEL	Griggs County Telephone
GT PLNS NAT GAS	Great Plains Natural Gas Company
HALS TEL	Halstad Telephone Company
IDEA1	Idea1
INT-COMM TEL	Inter-Community Telephone Company
KANEB PL	Kaneb Pipeline Company
KEM ELEC	Kem Electric Cooperative Incorporated
KOCH GATH SYS	Koch Gathering Systems Incorporated
LKHD PL	Lakehead Pipeline Company
LNGDN RWU	Langdon Rural Water Users Incorporated
LWR YELL R ELEC	Lower Yellowstone Rural Electric
MCKNZ CON	McKenzie Consolidated Telcom
MCKNZ ELEC	McKenzie Electric Cooperative
MCKNZ WRD	McKenzie County Water Resource District
MCLEOD	McLeod USA
MCLN ELEC	McLean Electric Cooperative
MCLN-SHRDN R WAT	McLean-Sheridan Rural Water
MDU	Montana-dakota Utilities
MID-CONT CABLE	Mid-Continent Cable
MIDSTATE TEL	Midstate Telephone Company
MINOT CABLE	Minot Cable Television
MINOT TEL	Minot Telephone Company
MISS W W S	Missouri West Water System
MNKOTA PWR	Minnkota Power
MOR-GRAN-SOU ELEC	Mor-gran-sou Electric Cooperative
MOUNT-WILLI ELEC	Mountrail-williams Electric Cooperative
MRE LBTY TEL	Moore & Liberty Telephone
MUNICIPAL	City Water And Sewer
MUNICIPAL	City Of '.....'
N CENT ELEC	North Central Electric Cooperative
N VALL W DIST	North Valley Water District
ND PKS & REC	North Dakota Parks And Recreation
ND TEL	North Dakota Telephone Company
NDDOT	North Dakota Department of Transportation
NDSU SOIL SCI DEPT	NDSU Soil Science Department
NEMONT TEL	Nemont Telephone
NODAK R ELEC	Nodak Rural Electric Cooperative
NOON FRMS TEL	Noonan Farmers Telephone Company
NPR	Northern Plains Railroad
NSP	Northern States Power
NTH PRAIR RW	Northern Prairie Rural Water Association
NTHN BRDR PL	Northern Border Pipeline
NTHN PLNS ELEC	Northern Plains Electric Cooperative Incorporated
NTHWSTRN REF	Northwestern Refinery Company
NW COMM	Northwest Communication Cooperation
ONEOK	Oneok gas
OSHA	Occupational Safety and Health Administration
OTTR TL PWR	Otter Tail Power Company
P L E M	Prairielands Energy Marketing
POLAR COM	Polar Communications
PVT ELEC	Private Electric
QWEST	Qwest Communications
R&T W SUPPLY	R & T Water Supply Association
RAMSEY R SEW	Ramsey Rural Sewer Association
RAMSEY RW	Ramsey Rural Water Association
RAMSEY UTIL	Ramsey County Rural Utilities
RED RIV TEL	Red River Rural Telephone
RESVTN TEL	Reservation Telephone
ROBRTS TEL	Roberts Company Telephone
R-RIDER ELEC	Roughrider Electric Coop
RRVW	Red River Valley & Western Railroad
RSR ELEC	R.S.R. Electric Cooperative
S E W U	South East Water Users Incorporated
SCOTT CABLE	Scott Cable Television Dickinson
SHERDN ELEC	Sheridan Electric Cooperative
SHEYN VLY ELEC	Sheyenne Valley Electric Cooperative
SKYTECH	Skyland Technologies Incorporated
SLOPE ELEC	Slope Electric Cooperative Incorporated
SOURIS RIV TELCOM	Souris River Telecommunications
ST WAT COMM	State Water Commission
STATE LN WATER	State Line Water Cooperative
STER ENG	Sterling Energy
STUT RWU	Stutsman Rural Water Users
SW PL PRJ	Southwest Pipeline Project
T M C	Turtle Mountain Communications
TCI	TCI of North Dakota
TESORO HGH PLNS PL	Tesoro High Plains Pipeline
TRI-CNTY WU	Tri-County Water Users Incorporated
TRL CO RWU	Traill County Rural Water Users
UNTD TEL	United Telephone
UPPR SOUR WUA	Upper Souris Water Users Association
US SPRINT	U.S. Sprint
USAF MSL CABLE	U.S.A.F. Missile Cable
USFWS	US Fish and Wildlife Service
USW COMM	U.S. West Communications
VRNDRY ELEC	Verendrye Electric Cooperative
W RIV TEL	West River Telephone Incorporated
WEB	W. E. B. Water Development Association
WILLI RWA	Williams Rural Water Association
WILSTN BAS PL	Williston Basin Interstate Pipeline Company
WLSH RWD	Walsh Water Rural Water District
WOLVRTN TEL	Wolverton Telephone
XLENER	Xcel Energy
YSVR	Yellowstone Valley Railroad

NORTH DAKOTA DEPARTMENT OF TRANSPORTATION	
07-01-14	
REVISIONS	
DATE	CHANGE

This document was originally issued and sealed by Roger Weigel, Registration Number PE- 2930, on 07/01/14 and the original document is stored at the North Dakota Department of Transportation

D-101-20

Line Styles

- Limits of Const Transition Line
- Bale Check
- Rock Check
- Sight Distance Triangle Line
- Small Hidden Object
- Dimension Leader
- Existing Ground
- Existing Topsoil (Cross Section View)
- Large Hidden Object
- Edge Drain
- D — Geotextile Fabric Type D
- E — Existing Electrical
- FO — Existing Fiber Optic Line
- FO — Existing TV Fiber Optic
- G — Existing Gas Pipe
- Geo — Geogrid
- OH — Existing Overhead Utility Line
- P — Existing Power
- PL — Existing Fuel Pipeline
- PL — Existing Undefined Above Ground Pipe Line
- R — Geotextile Fabric Type R
- R — Geotextile Fabric Type R1
- REMOVE — Remove Line
- RR — Geotextile Fabric Type RR
- S — Geotextile Fabric Type S
- S — Floating Silt Curtain
- T — Existing Telephone Line
- TV — Existing TV Line
- Void — Existing Assumed Ground (Not Surveyed)
- Void — Tentative Ground Line
- W — Existing Water or Steam Line
- Existing Under Drain
- Under Drain
- Wall
- Existing Slotted Drain
- Existing Cemetary Boundary
- Centerline Pavement Marking
- Barrier with Centerline Pavement Marking
- Barrier Pavement Marking
- Stripe 4 IN Dotted Extension White
- Stripe 8 IN Dotted Extension White
- Stripe 8 IN Lane Drop
- Wetland Mitigation
- Existing Box Culvert Bridge
- Existing Concrete Surface
- Existing Drainage Structure
- Easement
- Existing Concrete
- Existing Easement
- Existing Gravel Surface
- Existing Aggregate (Cross Section View)
- Existing Curb and Gutter (Cross Section View)
- Existing Riprap
- Existing Underground Vault or Lift Station
- Tangent Line
- Hidden Object
- Existing Dirt Surface
- Existing Conduit
- Topsoil Profile
- Existing Conductor
- Conductor
- Fiber Optic
- Existing Loop Detector
- Subgrade, Subcut or Ditch Grade
- Existing Asphalt Surface
- Existing Asphalt (Cross Section View)
- Existing Reinforcement Rebar
- Existing Tie Point Line
- Existing State or International Line
- Existing Quarter Section Line
- Existing County
- Existing Section Line
- Existing Township
- Existing Railroad Centerline
- Centerline
- Existing Centerline
- Supplemental Contour
- Right of Way
- Existing Right of Way
- Existing Right of Way Railroad
- Failure Line
- Existing Conditions
- Existing Ground (Details)
- Existing Sixteenth Section Line
- Existing Right of Way Not State Owned
- Phantom Object
- Centerline Main
- Existing Guardrail Cable
- Existing Guardrail Metal
- Existing Edge of Water
- Excavation Limits
- Existing Government Lot Line
- Existing Adjacent Block Lines
- Existing Adjacent Lot Lines
- Existing Adjacent Property Line
- Existing Adjacent Subdivision Lines

NORTH DAKOTA DEPARTMENT OF TRANSPORTATION	
07-01-14	
REVISIONS	
DATE	CHANGE

This document was originally issued and sealed by Roger Weigel, Registration Number PE- 2930, on 07/01/14 and the original document is stored at the North Dakota Department of Transportation

D-101-21

Line Styles

- Subgrade Reinforcement
- Existing Down Guy Wire Down Guy
- Existing Fence
- Existing Railroad
- Existing Sanitary Sewer
- Existing Sanitary Force Main
- Existing Storm Drain
- Existing Storm Drain Force Main
- Fence
- Silt Fence
- Existing Field Line
- Exst Flow
- Flow
- Existing Culvert
- Existing Curb
- Existing Valley Gutter
- Existing Driveway Gutter
- Existing Curb and Gutter
- Existing Mountable Curb and Gutter
- Existing Double Micro Loop Detector
- Micro Loop Detector Double
- Existing Overhead Sign Structure
- Existing Micro Loop Detector
- Micro Loop Detector
- Existing Overhead Sign Structure Cantilever
- Existing Railroad Switch
- Overhead Sign Structure Cantilever
- 24 Inch Pipe
- Reinforced Concrete Pipe
- Signal Head with Mast Arm
- Existing Signal Head with Mast Arm
- Tie Bar at Random Spacing
- 3-Cable w Posts
- Existing 3-Cable w Posts
- Site Boundary
- Fiber Rolls
- Doweled Joint
- Tie Bar 30 Inch 4 Foot Center to Center
- Tie Bar 18 Inch 3 Foot Center to Center
- Existing Berm, Dike, Pit, or Earth Dam
- Existing Ditch Block
- Depression Contours
- Existing City Corporate Limits or Reservation Boundary
- Gravel Pit - Borrow Area
- Existing Tree Boundary
- Tree Row
- Existing Brush or Shrub Boundary
- Existing Retaining Wall
- Existing Planter or Wall
- Retaining Wall (Plan View)
- Sheet Piling
- W-Beam w Posts
- Existing W-Beam Guardrail with Posts
- Exst Wet Area-Vegetation Break
- Existing Wetland Delineated

NORTH DAKOTA DEPARTMENT OF TRANSPORTATION	
07-01-14	
REVISIONS	
DATE	CHANGE

This document was originally issued and sealed by Roger Weigel, Registration Number PE- 2930, on 07/01/14 and the original document is stored at the North Dakota Department of Transportation

Symbols

D-101-30

- North Arrow (Half Scale)
- Truck Mounted Attenuator
- Type I Barricade
- Type II Barricade
- Type III Barricade
- Catch Basin
- Cairn or Stone Circle
- Video Detection Camera
- Storm Drain Cap or Stub
- Corrugated Metal End Section 18 Inch
- Corrugated Metal End Section 24 Inch
- Corrugated Metal End Section 30 Inch
- Corrugated Metal End Section 36 Inch
- Corrugated Metal End Section 42 Inch
- Corrugated Metal End Section 48 Inch
- Concrete Foundation
- Ground Connection Conductor
- Neutral Connection Conductor
- Phase 1 Connection Conductor
- Phase 2 Connection Conductor
- Traffic Cone
- Signal Controller
- Pad Mounted Signal Controller
- Alignment Data Point
- Emergency Vehicle Detector
- Attenuation Device
- Diamond Grade Delineator Type A
- Diamond Grade Delineator Type B
- Diamond Grade Delineator Type C
- Diamond Grade Delineator Type D
- Diamond Grade Delineator Type E
- Flexible Delineator
- Flexible Delineator Type A
- Flexible Delineator Type B
- Flexible Delineator Type C
- Flexible Delineator Type D
- Flexible Delineator Type E
- Delineator Type A
- Delineator Type A Reset
- Delineator Type B
- Delineator Type B Reset
- Delineator Type C
- Delineator Type D
- Delineator Type E
- Delineator Drums
- Spot Elevation
- Existing Access Control Arrow
- Existing Artifact
- Existing Flashing Beacon
- Existing Benchmark
- Existing Railroad Battery Box
- Existing Bush or Shrub
- Existing Gas Cap or Stub
- Existing Sanitary Cap or Stub
- Existing Storm Drain Cap or Stub
- Existing Water Cap or Stub
- Existing Sanitary Cleanout
- Existing Concrete Foundation
- Existing Traffic Signal Controller
- Existing Pad Mounted Signal Controller
- Existing Sixteenth Section Corner
- Existing Quarter Section Corner
- Existing Section Corner
- Existing Railroad Crossbuck
- Existing Satellite Dish
- Existing Fuel Dispensers
- Existing Flexible Delineator Type A
- Existing Flexible Delineator Type B
- Existing Flexible Delineator Type C
- Existing Flexible Delineator Type D
- Existing Flexible Delineator Type E
- Existing Delineator Type A
- Existing Delineator Type B
- Existing Delineator Type C
- Existing Delineator Type D
- Existing Delineator Type E
- Existing EFB Misc
- Existing Flashing Beacon
- Existing Pipe Mounted Flasher
- Existing Pad Mounted Feed Point
- Existing Pipe Mounted Feed Point with Pad
- Existing Pole Mounted Feed Point
- Existing Railroad Frog
- Existing Snow Gate 18
- Existing Snow Gate 28
- Existing Snow Gate 40
- Existing Headwall
- Existing Pedestrian Head with Number
- Existing Signal Head
- Existing Sprinkler Head
- Existing Fire Hydrant
- Existing Catch Basin Drop Inlet
- Existing Curb Inlet
- Existing Manhole Inlet
- Existing Junction Box

NORTH DAKOTA DEPARTMENT OF TRANSPORTATION	
07-01-14	
REVISIONS	
DATE	CHANGE

This document was originally issued and sealed by Roger Weigel, Registration Number PE-2930, on 07/01/14 and the original document is stored at the North Dakota Department of Transportation

Symbols

D-101-31

- Existing Light Standard
- Existing High Mast Light Standard 10 Luminaire
- Existing High Mast Light Standard 3 Luminaire
- Existing High Mast Light Standard 4 Luminaire
- Existing High Mast Light Standard 5 Luminaire
- Existing High Mast Light Standard 6 Luminaire
- Existing High Mast Light Standard 7 Luminaire
- Existing High Mast Light Standard 8 Luminaire
- Existing High Mast Light Standard 9 Luminaire
- Existing Overhead Sign Structure Load Center
- Existing Luminaire
- Existing Light Standard Luminaire
- Existing Federal Mailbox
- Existing Private Mailbox
- Existing Meander Section Corner
- Existing Meter
- Existing Electrical Manhole
- Existing Gas Manhole
- Existing Sanitary Manhole
- Existing Sanitary Force Main Manhole
- Existing Sanitary Manhole with Valve
- Existing Storm Drain Manhole
- Existing Force Main Storm Drain Manhole
- Existing Force Main Storm Drain Manhole with Valve
- Existing Telephone Manhole
- Existing Manhole with Valve Water
- Existing Water Manhole
- Existing Mile Post Type A
- Existing Mile Post Type B
- Existing Mile Post Type C
- Existing Reference Marker
- Existing RW Marker
- Existing Utility Marker
- Iron Monument Found
- Iron Pin R/W Monument
- Existing Object Marker Type I
- Existing Object Marker Type II
- Existing Object Marker Type III
- Existing Electrical Pedestal
- Existing Telephone Pedestal
- Existing Fiber Optic Telephone Pedestal
- Existing TV Pedestal
- Existing Fiber Optic TV Pedestal
- Existing Fuel Filler Pipes
- Existing Traverse PI Aerial Panel
- Existing Pole
- Existing Power Pole
- Existing Power Pole with Transformer
- Existing Telephone Pole
- Existing Wood Pole
- Existing Post
- Existing Pedestrian Push Button Post
- Existing Control Point CP
- Existing Control Point GPS-RTK
- Existing Control Point TRI
- Existing Reference Marker Point NGS
- Existing Pull Box
- Existing Intelligent Transportation Pull Box
- Existing Water Pump
- Existing Slotted Reinforced Concrete Pipe
- Existing RR Profile Spot
- Existing Fuel Leak Sensors
- Existing Highway Sign
- Existing Miscellaneous Spot
- Existing Lighting Standard Pole
- Existing Traffic Signal Standard
- Existing Transformer
- Existing Large Evergreen Tree
- Existing Small Evergreen Tree
- Existing Large Tree
- Existing Small Tree
- Existing Tree Trunk
- Existing Pad Mounted Traffic Signal Control Box
- Existing Undefined Manhole
- Existing Undefined Pull Box
- Existing Undefined Pedestal
- Existing Undefined Valve
- Existing Undefined Pipe Vent
- Existing Gas Valve
- Existing Water Valve
- Existing Fuel Pipe Vent
- Existing Gas Pipe Vent
- Existing Sanitary Pipe Vent
- Existing Storm Drain Pipe Vent
- Existing Water Pipe Vent
- Existing Weather Station
- Existing Ground Water Well Bore Hole
- Existing Windmill or Tower
- Existing Witness Corner
- Flashing Beacon
- Flagger
- Pipe Mounted Flasher
- Sanitary Force Main with Valve

NORTH DAKOTA DEPARTMENT OF TRANSPORTATION	
07-01-14	
REVISIONS	
DATE	CHANGE

This document was originally issued and sealed by Roger Weigel, Registration Number PE-2930, on 07/01/14 and the original document is stored at the North Dakota Department of Transportation

Symbols

D-101-32

- Pad Mounted Feed Point
- Pipe Mounted Feed Point with Pad
- Pole Mounted Feed Point
- Headwall
- Double Headwall with Vegitation Barrier
- Single Headwall with Vegitation Barrier
- Pole Mounted Head
- Sprinkler Head
- Fire Hydrant
- Inlet Type 1
- Inlet Type 2
- Double Inlet Type 2
- Inlet Grate Type 2
- Junction Box
- High Mast Light Standard 10 Luminaire
- High Mast Light Standard 3 Luminaire
- High Mast Light Standard 4 Luminaire
- High Mast Light Standard 5 Luminaire
- High Mast Light Standard 6 Luminaire
- High Mast Light Standard 7 Luminaire
- High Mast Light Standard 8 Luminaire
- High Mast Light Standard 9 Luminaire
- Relocate Light Standard
- Overhead Sign Structure Load Center
- Light Standard 100 Watt High Pressure Sodium Vapor Luminaire
- Light Standard 1000 Watt High Pressure Sodium Vapor Luminaire
- Light Standard 150 Watt High Pressure Sodium Vapor Luminaire
- Light Standard 175 Watt High Pressure Sodium Vapor Luminaire
- Light Standard 200 Watt High Pressure Sodium Vapor Luminaire
- Light Standard 250 Watt High Pressure Sodium Vapor Luminaire
- Light Standard 310 Watt High Pressure Sodium Vapor Luminaire
- Light Standard 35 Watt High Pressure Sodium Vapor Luminaire
- Light Standard 400 Watt High Pressure Sodium Vapor Luminaire
- Light Standard 50 Watt High Pressure Sodium Vapor Luminaire
- Light Standard 70 Watt High Pressure Sodium Vapor Luminaire
- Light Standard 700 Watt High Pressure Sodium Vapor Luminaire
- Manhole
- Manhole 48 Inch
- Sanitary Force Main Manhole
- Sanitary Sewer Manhole
- Storm Drain Manhole
- Storm Drain Manhole with Inlet
- Reset Mile Post
- Mile Post Type A
- Mile Post Type B
- Mile Post Type C
- Right of Way Marker
- Tubular Marker
- Alignment Monument
- Iron Pin Reference Monument
- Object Marker Type I
- Object Marker Type II
- Object Marker Type III
- Caution Mode Arrow Panel
- Back to Back Vertical Panel Sign
- Double Direction Arrow Panel
- Left Directional Arrow Panel
- Right Directional Arrow Panel
- Sequencing Arrow Panel
- Truck Mounted Arrow Panel
- Power Pole
- Wood Pole
- Pedestrian Push Button Post
- Property Corner
- Pull Box
- Intelligent Transportation Pull Box
- Sanitary Pump
- Storm Drain Pump
- Reinforced Pavement
- Reinforced Concrete End Section 15 Inch
- Reinforced Concrete End Section 18 Inch
- Reinforced Concrete End Section 24 Inch
- Reinforced Concrete End Section 30 Inch
- Reinforced Concrete End Section 36 Inch
- Reinforced Concrete End Section 42 Inch
- Reinforced Concrete End Section 48 Inch
- Reinforced Concrete End Section 54 Inch
- Reset Right of Way Marker
- Reset USGS Marker
- Right of Way Markers
- Riser 30 Inch
- CSB — Continuous Split Barrel Sample
- FA — Flight Auger Sample
- SB — Split Barrel Sample
- T — Thinwall Tube Sample
- Highway Sign
- SNOW GATE 18 FT
- SNOW GATE 28 FT
- SNOW GATE 40 FT
- N — Standard Penetration Test
- Transformer
- Incl — Inclinometer Tube
- Underdrain Cleanout
- Excavation Unit
- Water Valve

NORTH DAKOTA DEPARTMENT OF TRANSPORTATION	
07-01-14	
REVISIONS	
DATE	CHANGE

This document was originally issued and sealed by Roger Weigel, Registration Number PE-2930, on 07/01/14 and the original document is stored at the North Dakota Department of Transportation

D-255-2

EROSION AND SILTATION CONTROL
EROSION CONTROL BLANKET INSTALLATION

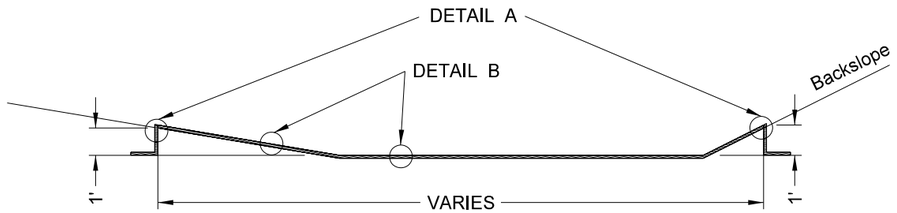

CROSS SECTION

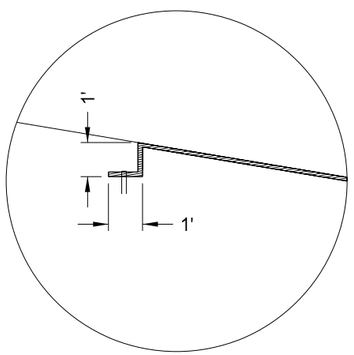

DETAIL A

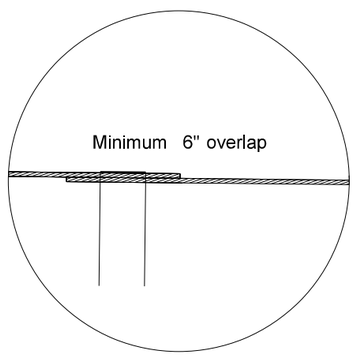

DETAIL B

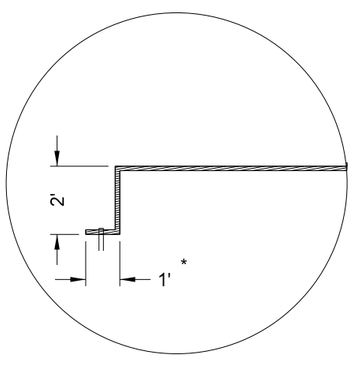

DETAIL C

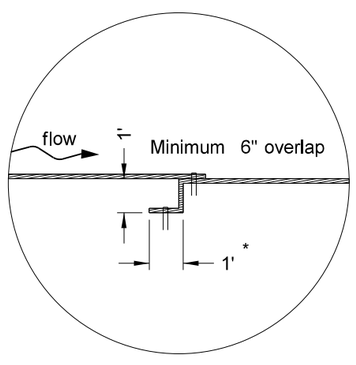

DETAIL D

* This tie may be placed ahead or back.

DETAILS

CHANNEL OR SLOPE INSTALLATION

Notes:
Beginning and ending of erosion control blanket areas shall be installed as shown in "DETAIL C".

Erosion control blanket ends shall be entrenched and stapled to eliminate undermining on side slopes.

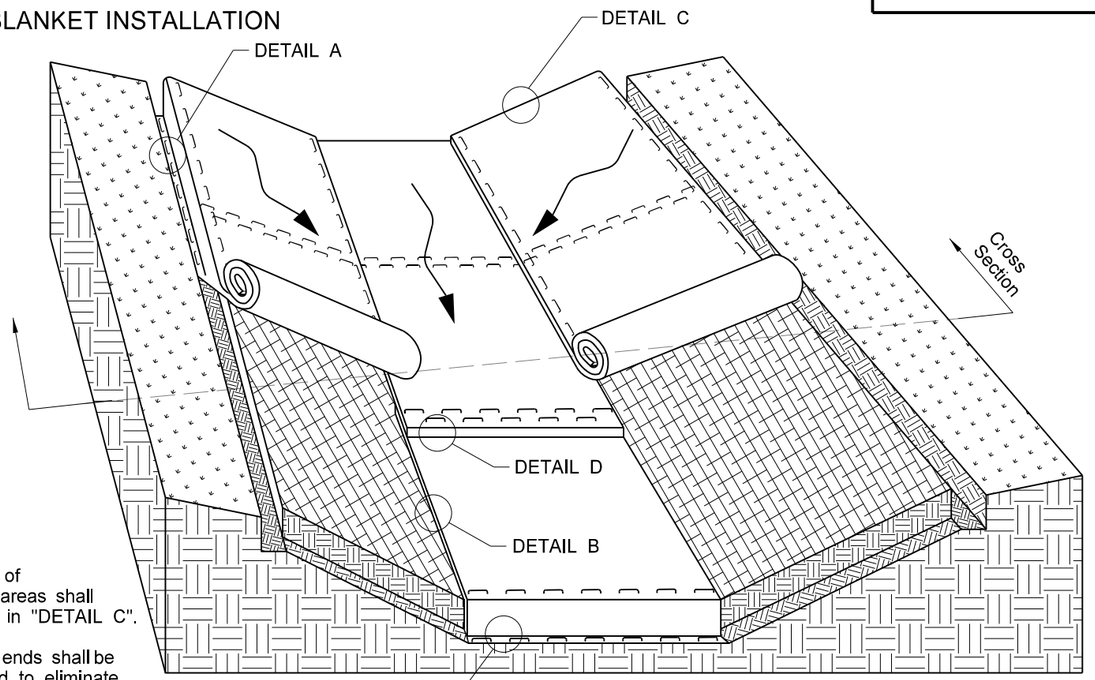

BLANKET LAYOUT

CHANNEL OR SLOPE INSTALLATION

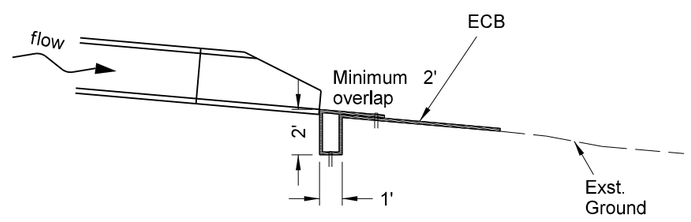

PIPE OUTLETS

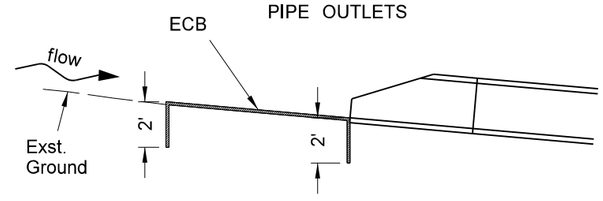

PIPE INLETS

INSTALLATION AT PIPE ENDS

3.8 staples per square yard using 8-inch 11 gauge wire "u" staples.

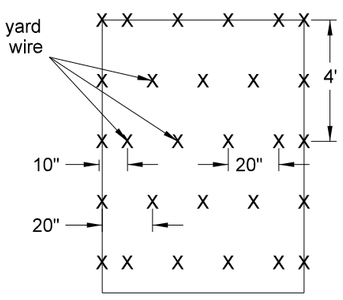

STAPLE PATTERN

NORTH DAKOTA DEPARTMENT OF TRANSPORTATION	
10-03-13	
REVISIONS	
DATE	CHANGE
06-26-14	Changed standard drawing number from D-708-5 to D-255-2.

This document was originally issued and sealed by Roger Weigel Registration Number PE-2930, on 06/26/14 and the original document is stored at the North Dakota Department of Transportation

EROSION AND SILTATION CONTROLS

D-256-1

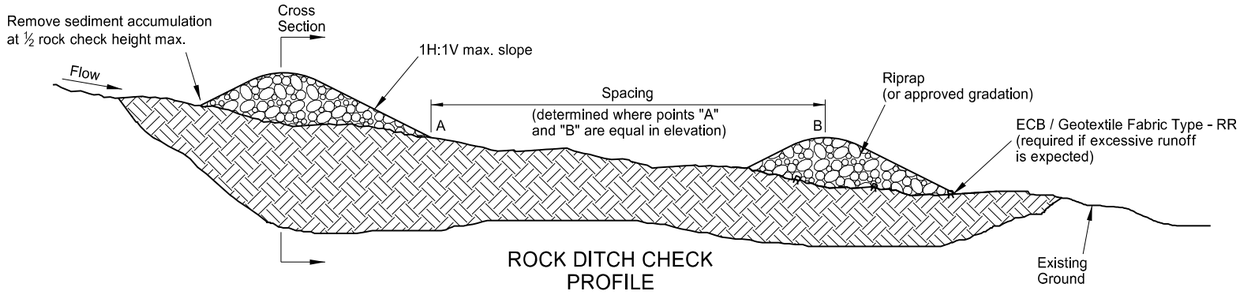

ROCK DITCH CHECK
PROFILE

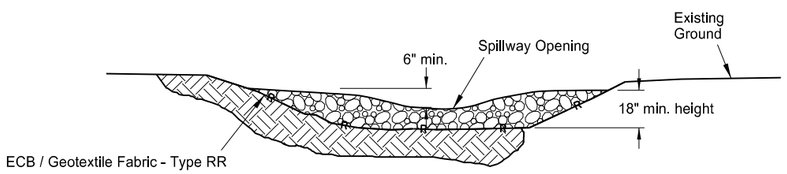

ROCK DITCH CHECK
CROSS SECTION

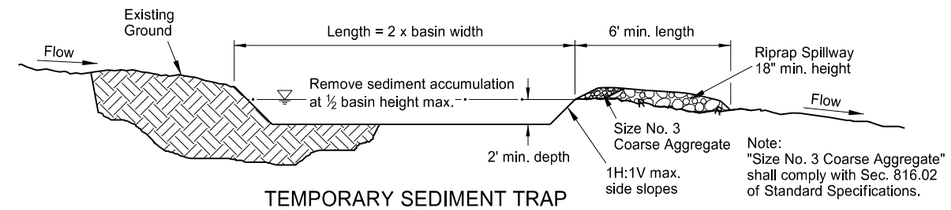

TEMPORARY SEDIMENT TRAP
(ROCK OUTLET)
PROFILE

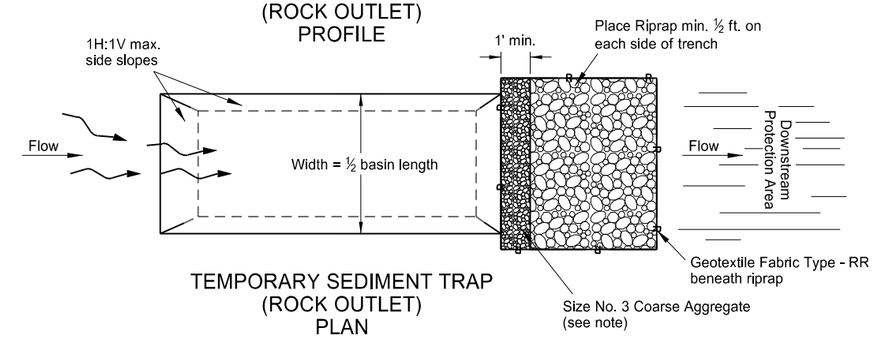

TEMPORARY SEDIMENT TRAP
(ROCK OUTLET)
PLAN

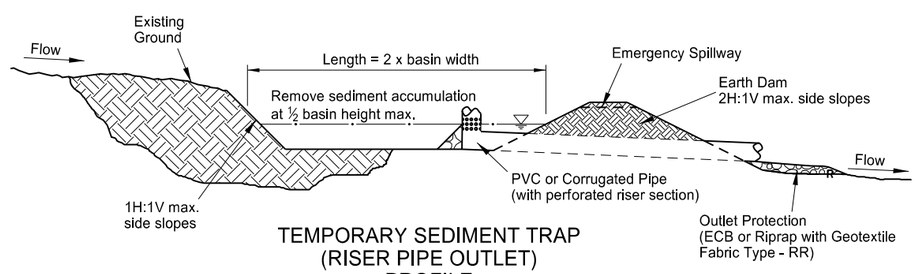

TEMPORARY SEDIMENT TRAP
(RISER PIPE OUTLET)
PROFILE

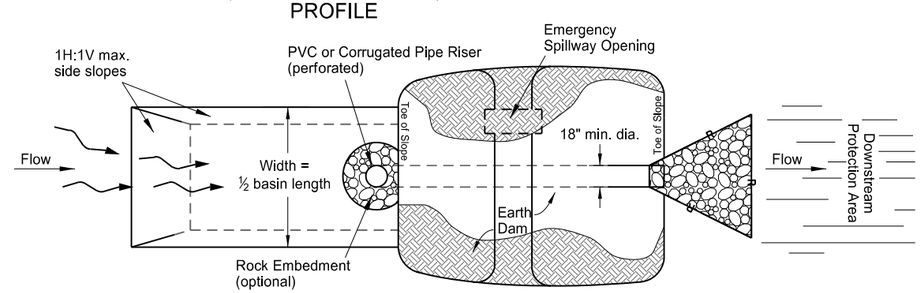

TEMPORARY SEDIMENT TRAP
(RISER PIPE OUTLET)
PLAN

NORTH DAKOTA DEPARTMENT OF TRANSPORTATION	
10-03-13	
REVISIONS	
DATE	CHANGE
06-26-14	Changed standard drawing number from D-708-2 to D-256-1. Deleted silt fence details.

This document was originally issued and sealed by Roger Weigel Registration Number PE- 2930, on 06/26/14 and the original document is stored at the North Dakota Department of Transportation

EROSION AND SILTATION CONTROLS - SILT FENCE

D-260-1

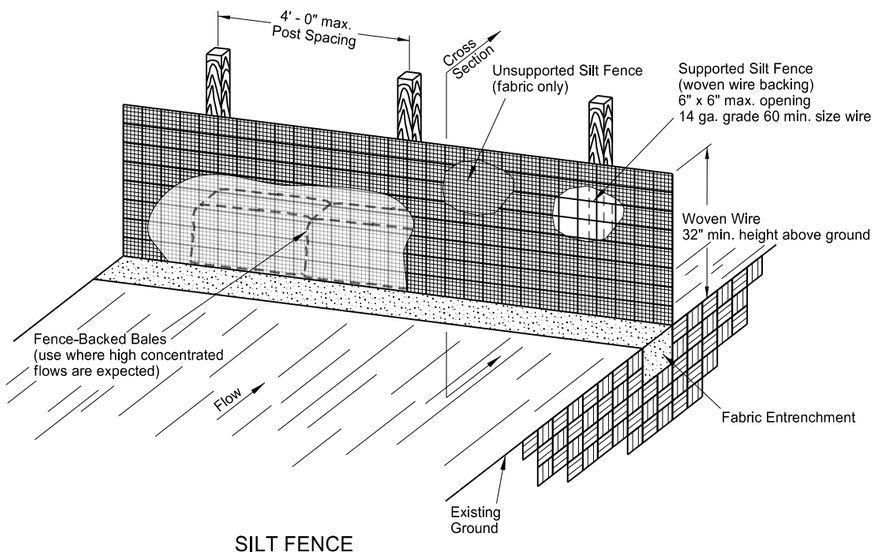

SILT FENCE
SUPPORTED AND UNSUPPORTED

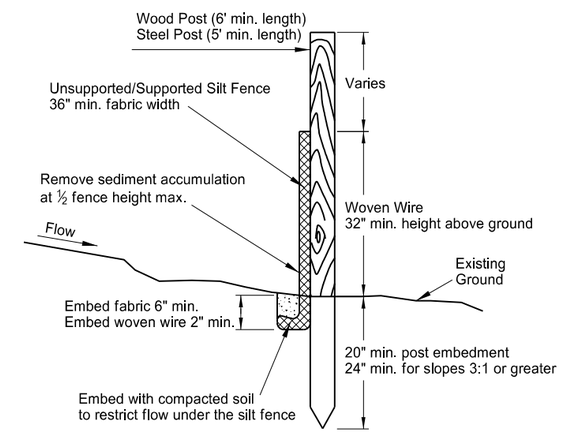

SILT FENCE
CROSS SECTION

NORTH DAKOTA DEPARTMENT OF TRANSPORTATION	
10-03-13	
REVISIONS	
DATE	CHANGE
06-26-14	Standard drawing resulted from splitting standard D-708-2.

This document was originally issued and sealed by Roger Weigel Registration Number PE- 2930, on 06/26/14 and the original document is stored at the North Dakota Department of Transportation

D-261-1

EROSION CONTROL
FIBER ROLL PLACEMENT DETAILS

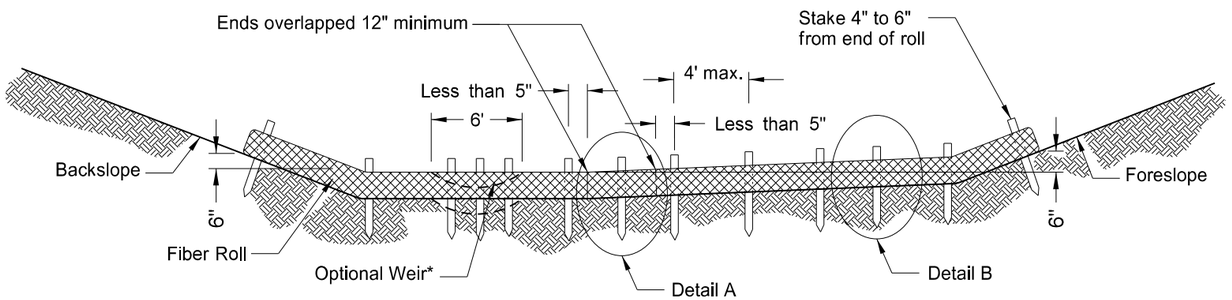

*Optional Weir. Use in flat areas, such as the Red River Valley, where there is potential for water to back up on adjacent property. Lower fiber roll enough to prevent water from backing up on adjacent property. Do not use 20-inch fiber rolls in flat areas where there is potential for water to back up on adjacent property.

12 OR 20 INCH FIBER ROLL - DITCH BOTTOM

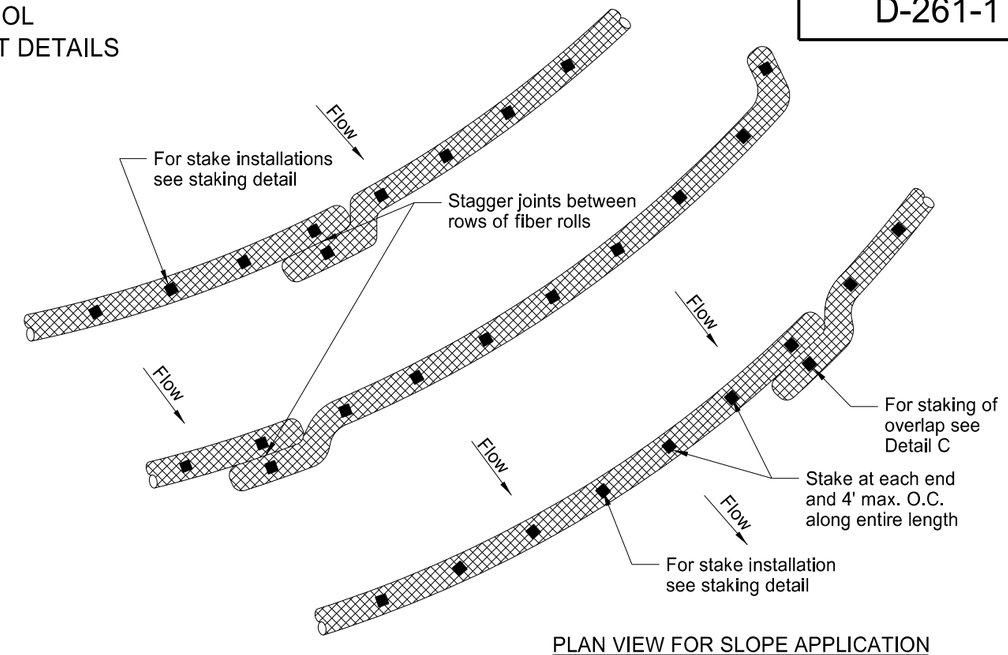

PLAN VIEW FOR SLOPE APPLICATION

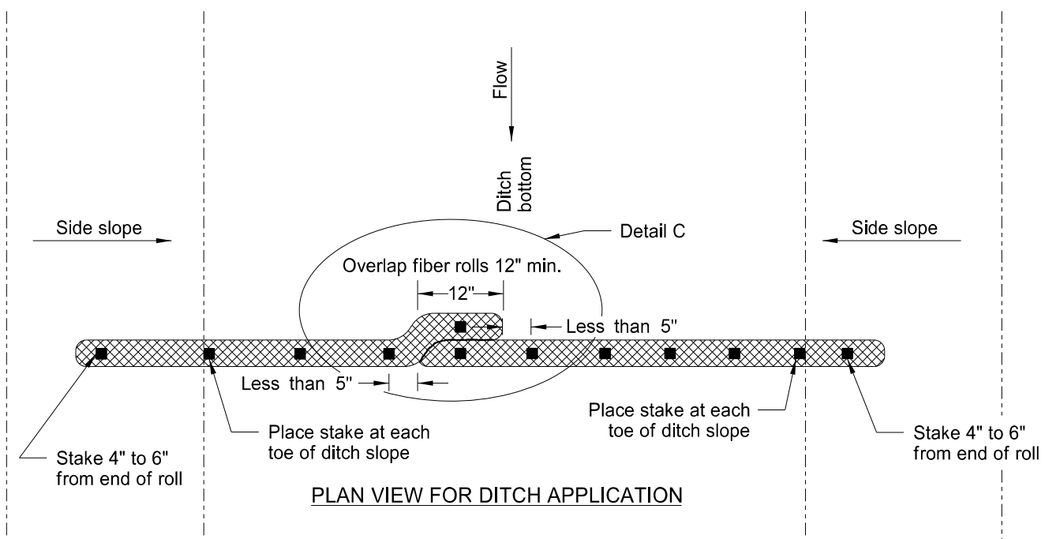

PLAN VIEW FOR DITCH APPLICATION

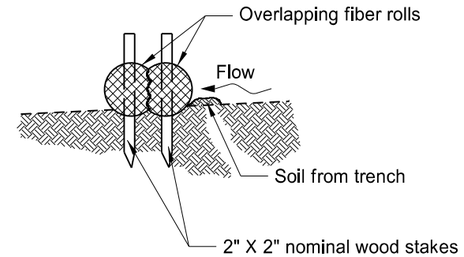

Detail A

Fiber Roll Overlapping Staking Detail

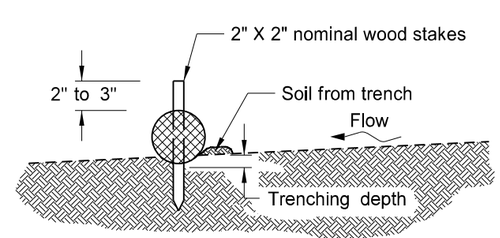

Detail B

Fiber Roll Staking Detail

FIBER ROLL DIAMETER	NOMINAL STAKE SIZE	MINIMUM STAKE LENGTH	MINIMUM TRENCH DEPTH	MAXIMUM TRENCH DEPTH
6"	2" x 2"	18"	2"	2"
12"	2" x 2"	24"	2"	3"
20"	2" x 2"	36"	3"	5"

NOTE: Runoff must not be allowed to run under or around roll.

NORTH DAKOTA DEPARTMENT OF TRANSPORTATION

11-18-10

REVISIONS

DATE	CHANGE
06-10-13	Added plan view for ditch and slope application. Added table with values for stake and trench dimensions.
10-04-13	Revised fiber roll overlap detail.
06-26-14	Changed standard drawing number from D-708-7 to D-261-1.

This document was originally issued and sealed by Roger Weigel, Registration Number PE-2930, on 06/26/14 and the original document is stored at the North Dakota Department of Transportation

CONSTRUCTION SIGN DETAIL

D-704-5

SIGN NUMBER	G20-10-108
WIDTH x HEIGHT	9'-0" x 4'-0"
BORDER WIDTH	1.25" (inset 0.75")
CORNER RADIUS	3"
MOUNTING	Ground
BACKGROUND	TYPE: IV Reflective
	COLOR: Fluorescent Orange
LEGEND/BORDER	TYPE: Non-Refl
	COLOR: Black

SYMBOL	X	Y	WID	HT	ANGLE
	42.1	6.2	24	4	0

STATION(S):

AREA: 36.0 Sq.Ft.

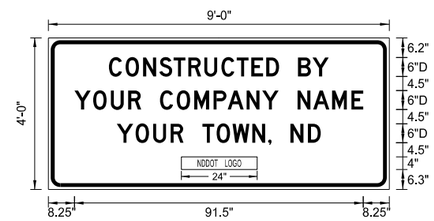

Dimensions are in inches.tenths

Letter locations are panel edge to lower left corner

LETTER POSITION (X)																			LENGTH	SIZE	SERIES
C	O	N	S	T	R	U	C	T	E	D		B	Y						69.7	6	D 2000
19.2	24.5	30	35.1	39.7	44.3	49.4	54.8	59.7	64.3	69	73.1	79.1	83.7								
Y	O	U	R		C	O	M	P	A	N	Y		N	A	M	E			91.5	6	D 2000
8.3	14.2	19.8	25.3	29.4	35.4	40.7	46.2	52.4	56.8	62.8	67.8	72.9	78.9	83.9	89.9	96					
Y	O	U	R		T	O	W	N	,		N	D							64.6	6	D 2000
21.7	27.6	33.2	38.7	42.8	48.8	53.3	58.4	64.6	69.6	70.7	76.7	82.2									

Notes:

1. Sign shall be placed a distance of ½A following the End Road Work (G20-2a-48) sign. There shall be a maximum of 2 signs per project.

2. Sign shall be post mounted.

3. Sign required on rural projects with a 30 day or longer duration and it is not required on seal coat projects or other short duration projects.

4. Sign shall not be placed in urban areas or within city limits.

Advance Warning Sign Spacing (A)			
Road Type	Distance between signs min. (ft)		
	A	B	C
Urban - Low Speed (30 mph or less)	150	150	150
Urban - Low Speed (over 30 to 40 mph)	280	280	280
Urban - High Speed (over 40 mph to 50 mph)	360	360	360
Rural - High Speed (over 50 mph to 65 mph)	720	720	720
Urban Expressway and Freeway (55 mph to 60 mph)	850	1350	2200
Rural Expressway and Freeway (70 mph to 75 mph)	1000	1500	2640
Interstate/4-Lane Divided (Maintenance and Surveying)	750	1000	1500

NORTH DAKOTA
DEPARTMENT OF TRANSPORTATION

8-22-12

REVISIONS

DATE	CHANGE
7-18-14	Revise sheeting to type IV

This document was originally issued and sealed by Roger Weigel Registration Number PE- 2930, on 7/18/14 and the original document is stored at the North Dakota Department of Transportation

BREAKAWAY SYSTEMS FOR CONSTRUCTION ZONE SIGNS

D-704-7

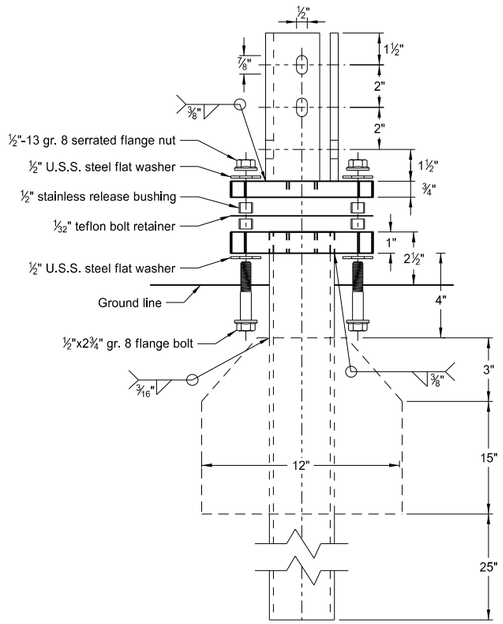

Multi-Directional
Slip Base Assembly

Perforated Tube

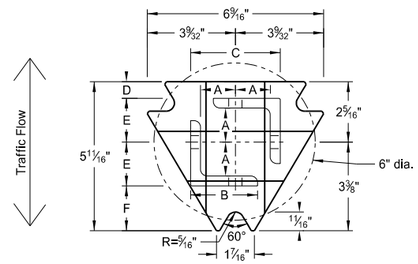

Top Post Receiver
Plate - ASTM A572 grade 50
Angle Receiver - 2½"x2½"x⅜" ASTM A36 structural angle

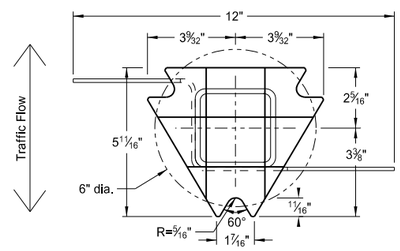

Bottom Soil Stub
Tube - 3"x3"x7 gauge ASTM A500 grade B tube
Stabilizing Wing - 7 gauge H.R.P.O. ASTM A1011
Plate - ASTM A572 grade 50

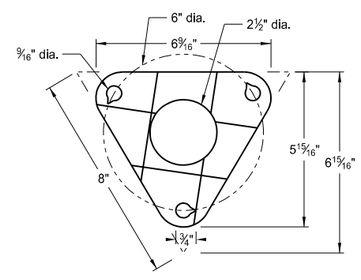

Bolt Retainer for Base Connection
Bolt Retainer- 1/32" Reprocessed Teflon

Notes:

1. Slip base bolts shall be torqued as specified by the manufacturer.
2. Anchor shall have a yield strength of 43.9 KSI and tensile strength of 59.3 KSI.
3. The 4" vertical clearance is required for the anchor or breakaway base. The 4"x60" measurement shall be made above and below post location and also back and ahead of the post.
4. When used in concrete sidewalk, anchor shall be same except without the wings.
5. Four post signs shall have over 7' between the first and the fourth posts.

Telescoping Perforated Tube						
Number of Posts	Post Size in.	Wall Thick-ness Gauge	Sleeve Size in.	Wall Thick-ness Gauge	Slip Base	Anchor Size without Slip Base in.
1	2	12			No	2¼
1	2¼	12			No	2½
1	2½	12			(A)	3
1	2½	10			Yes	
1	2¼	12	2	12	Yes	
1	2½	12	2¼	12	Yes	
2	2	12			No	2¼
2	2¼	12			No	2½
2	2½	12			Yes	
2	2½	12			Yes	
2	2¼	10	2	12	Yes	
2	2½	12	2¼	12	Yes	
3 & 4	2½	12			Yes	
3 & 4	2½	10			Yes	
3 & 4	2½	12	2¼	12	Yes	
3 & 4	2¼	12	2	12	Yes	
3 & 4	2½	10	2 3/16	10	Yes	

(A) The breakaway base is required when the support is placed in weak soils. The Engineer shall determine if the soils are weak.

(B) The 2 3/16"x10 ga. may be inserted into 2½"x10 ga. for additional wind load.

Properties of Telescoping Perforated Tube						
Tube Size in.	Wall Thickness in.	U.S. Standard Gauge	Weight per Foot lbs.	Moment of Inertia in.^{4}	Cross Sec. Area in.^{2}	Section Modulus in.^{3}
1½ x 1½	0.105	12	1.702	0.129	0.380	0.172
2 x 2	0.105	12	2.416	0.372	0.590	0.372
2¼ x 2¼	0.105	12	2.773	0.561	0.695	0.499
2 3/16 x 2 3/16	0.135	10	3.432	0.605	0.841	0.590
2½ x 2½	0.105	12	3.141	0.804	0.803	0.643
2½ x 2½	0.135	10	4.006	0.979	1.010	0.785

Top Post Receiver Data Table						
Square Post Sizes (B)	A	B	C	D	E	F
2 3/16"x10 ga.	1 9/64"	2½"	3 1/32"	25/32"	1 33/64"	1⅞"
2½"x10 ga.	1 9/32"	2½"	3 5/16"	⅝"	1 21/32"	1¾"

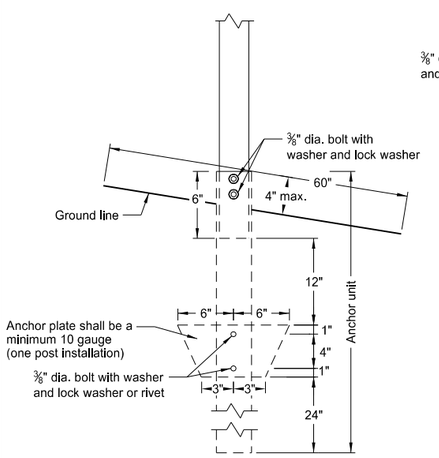

Anchor Unit and Post Assembly

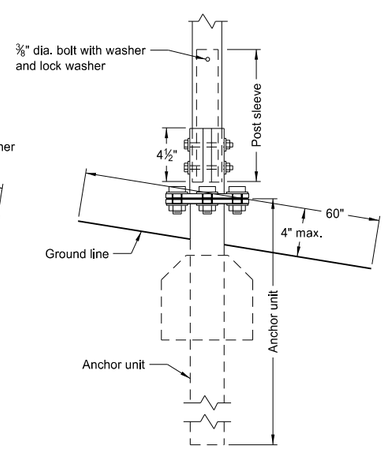

Multi-Directional
Slip Base Anchor Unit
and Post Sleeve Assembly

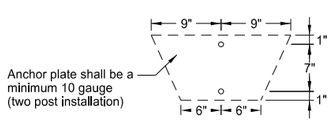

NORTH DAKOTA DEPARTMENT OF TRANSPORTATION	
2-28-14	
REVISIONS	
DATE	CHANGE

This document was originally issued and sealed by Roger Weigel, Registration Number PE- 2930, on 2/28/14 and the original document is stored at the North Dakota Department of Transportation

BREAKAWAY SYSTEMS FOR CONSTRUCTION ZONE SIGNS

D-704-8

U-Channel Post

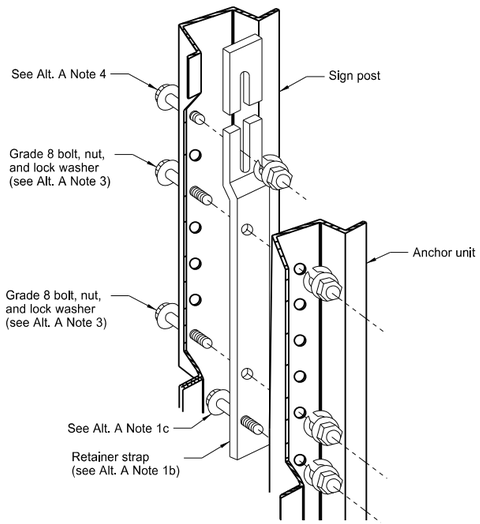

Detail A

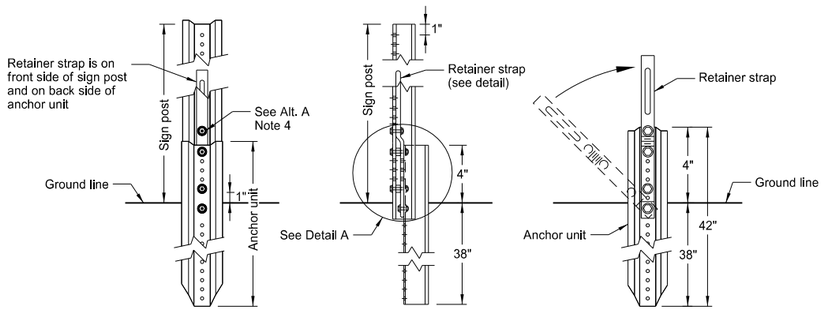

Front View | Side View | Back View

Breakaway U-Channel Detail
Alternate A

A maximum of 2 posts shall be installed within 7'.

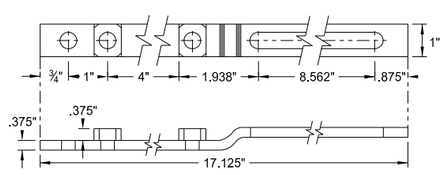

Retainer Strap Detail

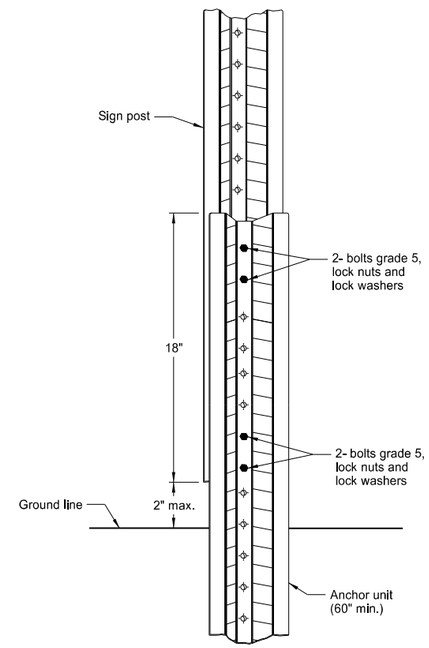

Breakaway U-Channel Splice Detail
Alternate B
(2.5 and 3 lb/ft)

A maximum of 3 posts shall be installed within 7'.

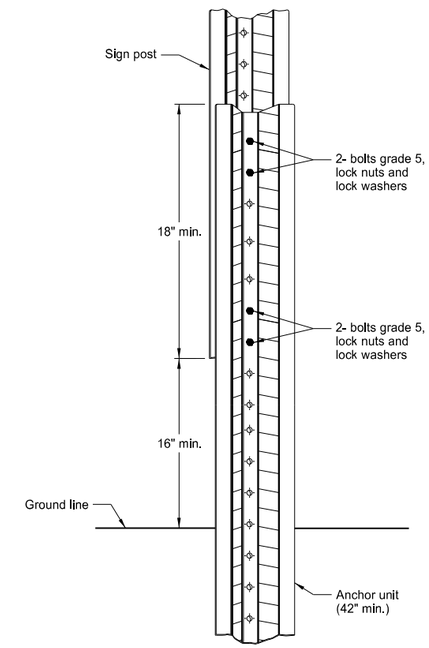

Breakaway U-Channel Splice Detail
Alternate C
(2.5 and 3 lb/ft)

A maximum of 3 posts shall be installed within 7'.

Alternate A Steps of Installation:

1. a) Drive anchor unit to within 12" of ground level.
   b) Proper assembly established by lining up the bottom hole of retainer strap with the 6th hole from the top of the anchor unit.
   c) Assemble strap to back of anchor unit using 5/16"x2" bolt, lock washer and nut.
   d) Rotate strap 90° to left.
2. a) Drive anchor unit to 4" above ground.
   b) Rotate strap to vertical position.
3. a) Place 5/16"x2" bolt, lock washer and nut in bottom of sign post to facilitate alignment of sign post with proper hole in anchor unit.
   b) Alternately tighten two connector bolts.
4. Complete assembly by tightening 5/16"x2" bolt (this fastens sign post to retainer strap).
5. The base post, strap and sign post shall be properly nested. Proper nesting occurs when all flat surfaces of the base post, strap, and sign post at the bolts have full contact across the entire width.

NORTH DAKOTA DEPARTMENT OF TRANSPORTATION	
2-28-14	
REVISIONS	
DATE	CHANGE

This document was originally issued and sealed by Roger Weigel, Registration Number PE- 2930, on 2/28/14 and the original document is stored at the North Dakota Department of Transportation

CONSTRUCTION SIGN DETAILS
TERMINAL AND GUIDE SIGNS

D-704-9

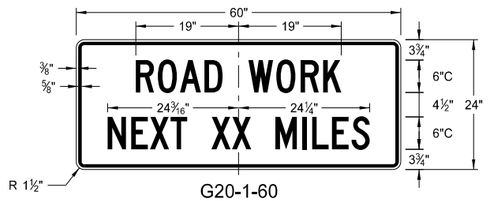

G20-1-60
Legend: black (non-refl)
Background: orange

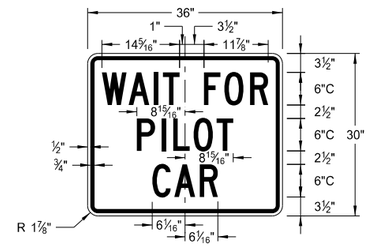

G20-4b-36
Legend: black (non-refl)
Background; orange

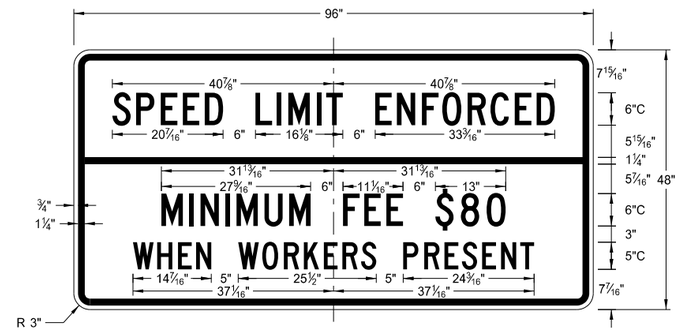

G20-55-96
Legend: black (non-refl)
Background: orange

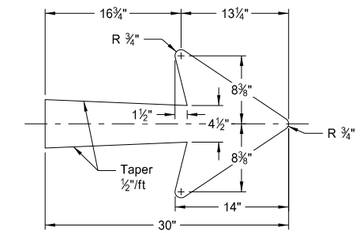

E5-1-48

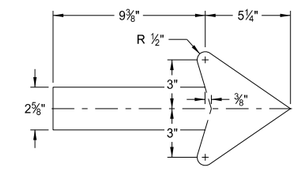

G20-50a-72
G20-52a-72

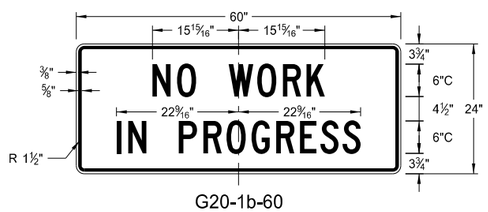

G20-1b-60
Legend: black (non-refl)
Background: orange

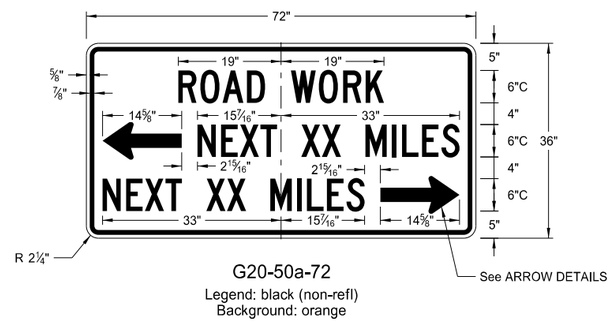

G20-50a-72
Legend: black (non-refl)
Background: orange

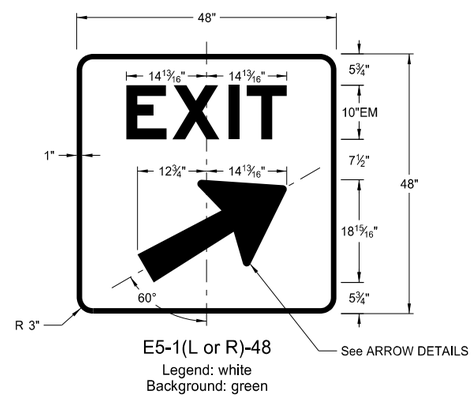

E5-1(L or R)-48
Legend: white
Background: green

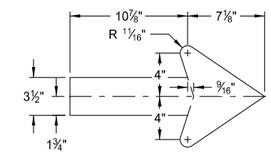

M4-9(L or R)-30
Right or Left

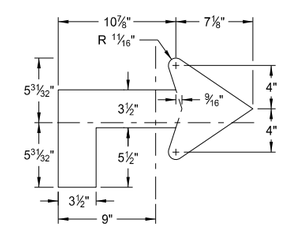

M4-9(L or R)-30
Advanced Right or Left

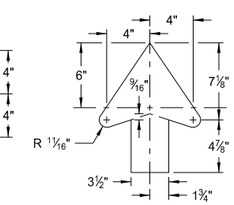

M4-9-30
Straight

ARROW DETAILS

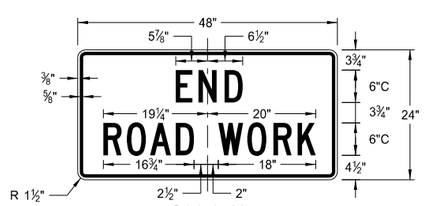

G20-2-48
Legend: black (non-refl)
Background: orange

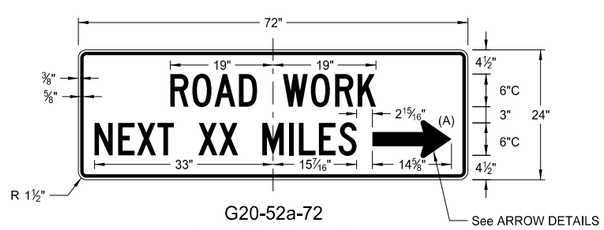

G20-52a-72
Legend: black (non-refl)
Background: orange

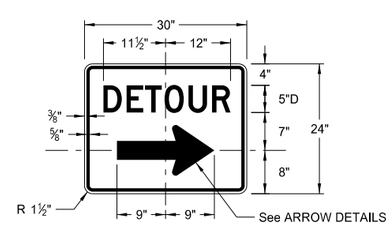

M4-9(L or R)-30 &
M4-9-30
Legend: black (non-refl)
Background: orange

NOTES:

(A) Arrow may be right or left of the legend to indicate construction to the right or left.

NORTH DAKOTA DEPARTMENT OF TRANSPORTATION	
8-13-13	
REVISIONS	
DATE	CHANGE

This document was originally issued and sealed by Roger Weigel, Registration Number PE- 2930, on 8/13/13 and the original document is stored at the North Dakota Department of Transportation

CONSTRUCTION SIGN DETAILS
REGULATORY SIGNS

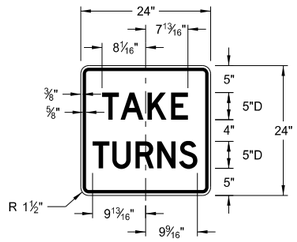

R1-50-24
Legend: black (non-refl)
Background: white

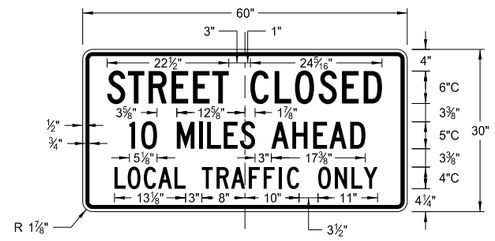

R11-3c-60
Legend: black (non-refl)
Background: white

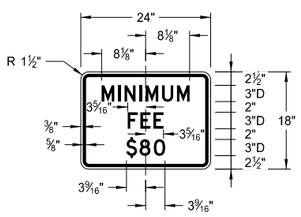

R2-1a-24
Legend: black (non-refl)
Background: white

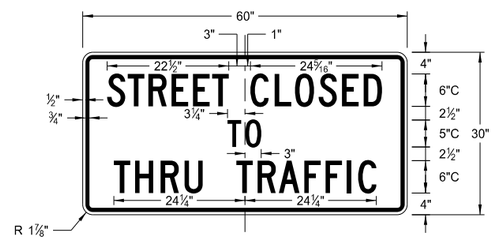

R11-4a-60
Legend: black (non-refl)
Background: white

R11-2a-48
Legend: black (non-refl)
Background: white

NORTH DAKOTA DEPARTMENT OF TRANSPORTATION	
8-13-13	
REVISIONS	
DATE	CHANGE

This document was originally issued and sealed by Roger Weigel, Registration Number PE- 2930, on 8/13/13 and the original document is stored at the North Dakota Department of Transportation

D-704-11

CONSTRUCTION SIGN DETAILS
WARNING SIGNS

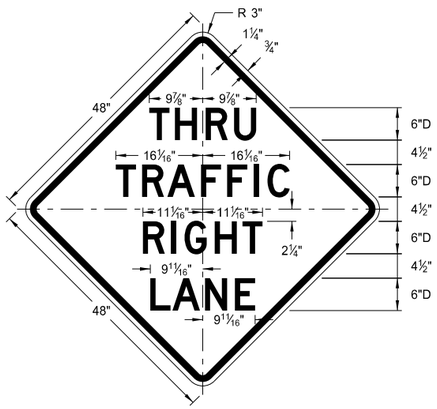

W5-8-48
Legend: black (non-refl)
Background: orange

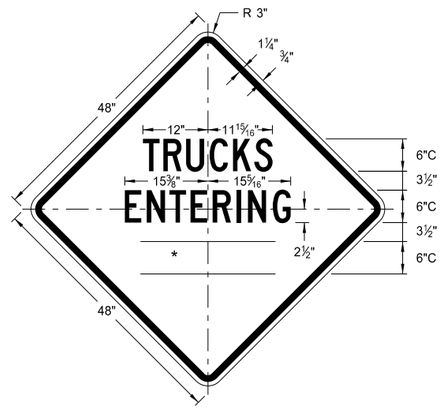

W8-54-48
Legend: black (non-refl)
Background: orange

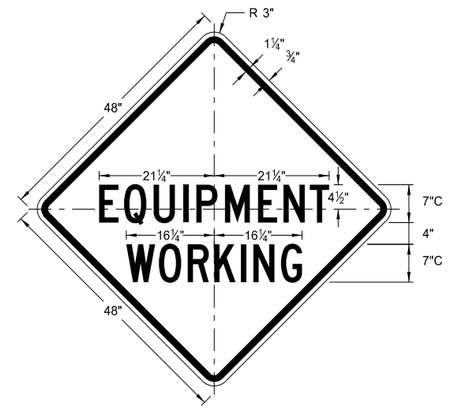

W20-51-48
Legend: black (non-refl)
Background: orange

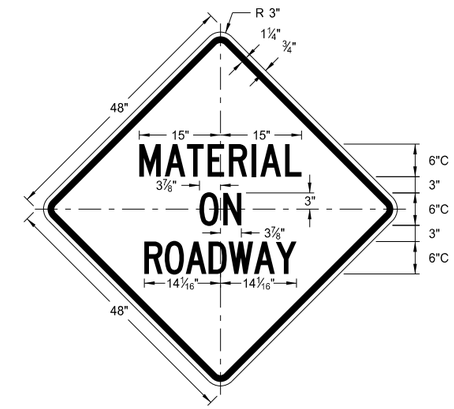

W21-51-48
Legend: black (non-refl)
Background: orange

WORD	LETTER SPACING
AHEAD	Standard
200 FT	Standard
350 FT	Standard
500 FT	Standard
1000 FT	Reduce 40%
1500 FT	Reduce 40%
½ MILE	Reduce 50%
1 MILE	Standard

* DISTANCE MESSAGES

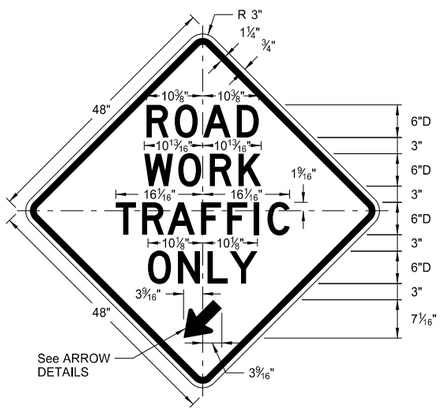

W5-9-48
Legend: black (non-refl)
Background: orange

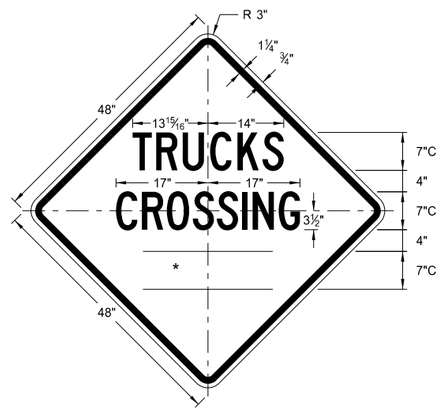

W8-55-48
Legend: black (non-refl)
Background: orange

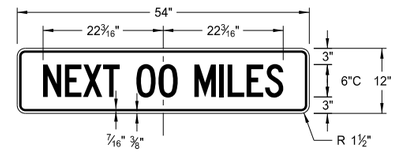

W20-52-54
Legend: black (non-refl)
Background: orange

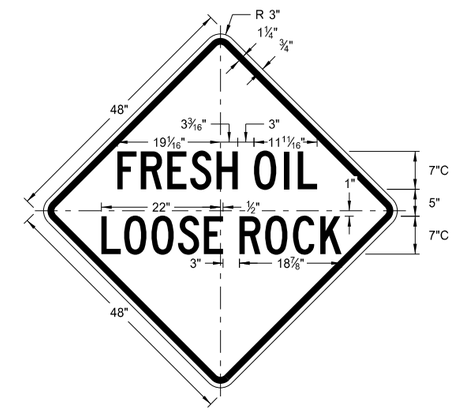

W22-8-48
Legend: black (non-refl)
Background: orange

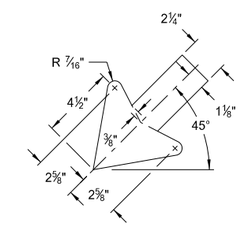

W5-9-48

ARROW DETAILS

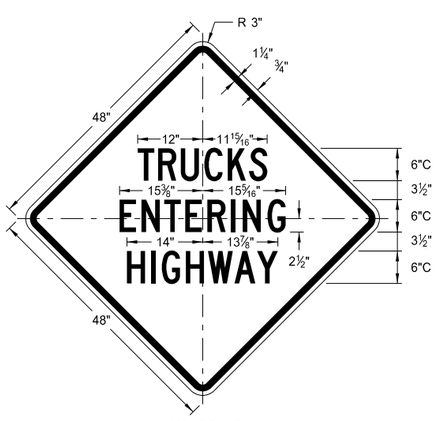

W8-53-48
Legend: black (non-refl)
Background: orange

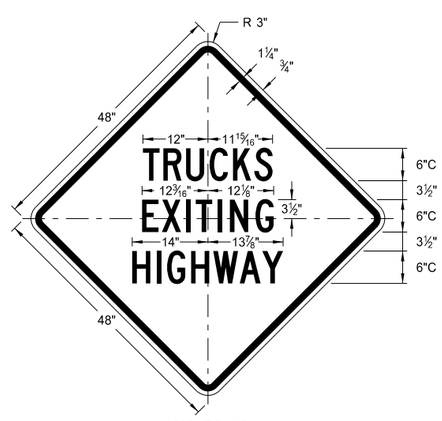

W8-56-48
Legend: black (non-refl)
Background: orange

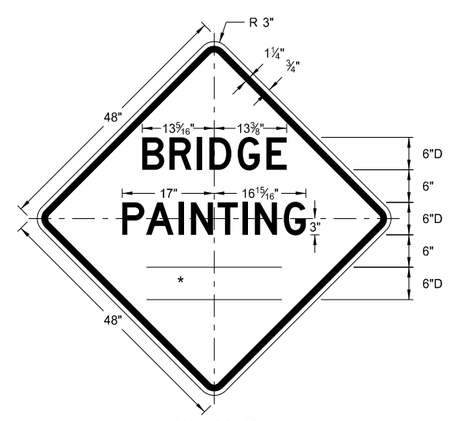

W21-50-48
Legend: black (non-refl)
Background: orange

NORTH DAKOTA DEPARTMENT OF TRANSPORTATION	
8-13-13	
REVISIONS	
DATE	CHANGE

This document was originally issued and sealed by Roger Weigel, Registration Number PE- 2930, on 8/13/13 and the original document is stored at the North Dakota Department of Transportation

SHOULDER CLOSURE TAPERS

D-704-12

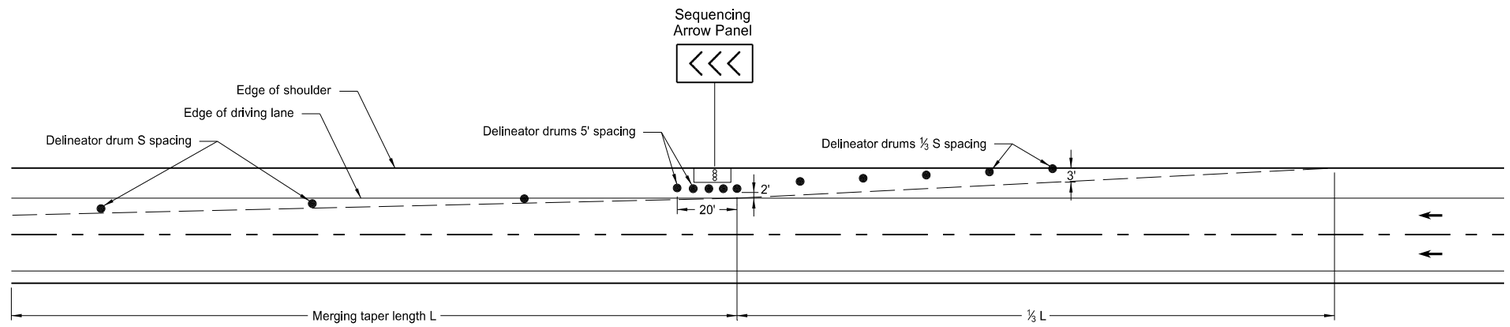

SHOULDER CLOSURE WITH LANE CLOSURE
(when shoulder is 8' or wider)

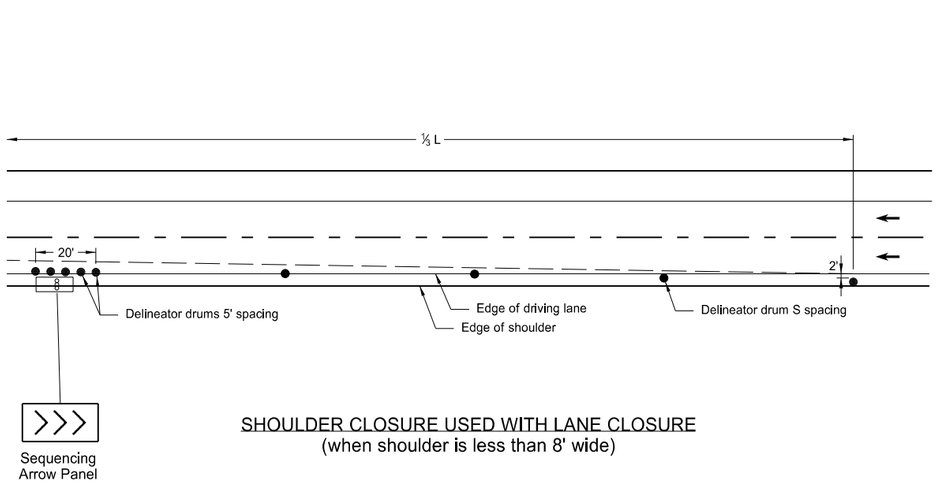

SHOULDER CLOSURE USED WITH LANE CLOSURE
(when shoulder is less than 8' wide)

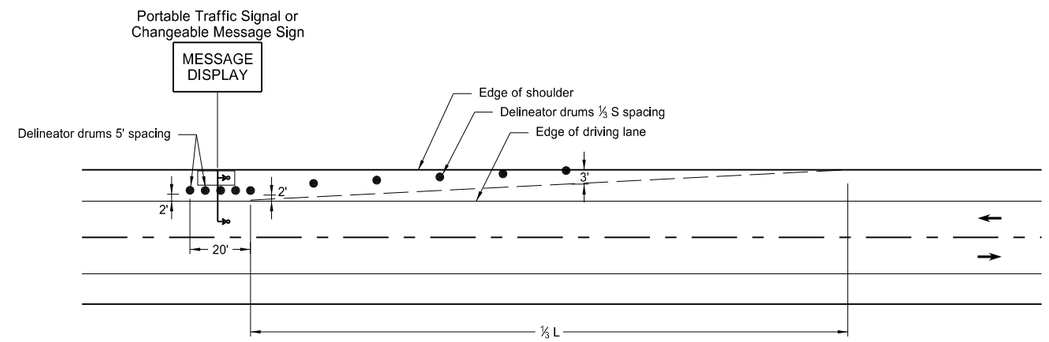

PORTABLE TRAFFIC SIGNAL OR CHANGEABLE MESSAGE SIGN ON SHOULDER

KEY			
●	Delineator Drum	∞	Sequencing Arrow Panel
∘	Message Display		Portable Traffic Signal

Notes:

1. S = Posted Speed Limit in mph
   W = Width of offset in feet
   L = Taper length in feet
   $L = WS^2/60$ (40mph or less)
   L = WS (45mph or more)

2. If a shoulder taper is used, it should have a length of approximately ⅓L. If a shoulder is used as a travel lane, a normal merging or shifting taper should be used.

3. When paved shoulders of 8 foot width or more are closed, channelizing devices shall be used to close the shoulder in advance to delineate the beginning of the work space and direct vehicular traffic to remain within the traveled way.

NORTH DAKOTA DEPARTMENT OF TRANSPORTATION	
10-3-13	
REVISIONS	
DATE	CHANGE

This document was originally issued and sealed by Roger Weigel Registration Number PE- 2930, on 10/3/13 and the original document is stored at the North Dakota Department of Transportation

BARRICADE AND CHANNELIZING DEVICE DETAILS

D-704-13

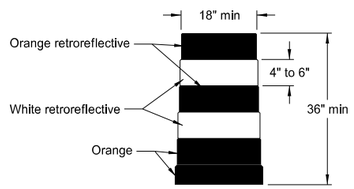

DELINEATOR DRUM

The markings on drums shall be horizontal, circumferential, alternating orange and white retroreflective stripes 4" to 6" wide. Each drum shall have a minimum of two orange and two white stripes with the top stripe being orange. Any nonretroreflectorized spaces between the horizontal orange and white stripes shall not exceed 3" wide. Stripes shall not be placed on ribs or indentations in the drum. Drums shall have closed tops that will not allow collection of construction debris or other debris. Ballast shall not be placed on the top of a drum.

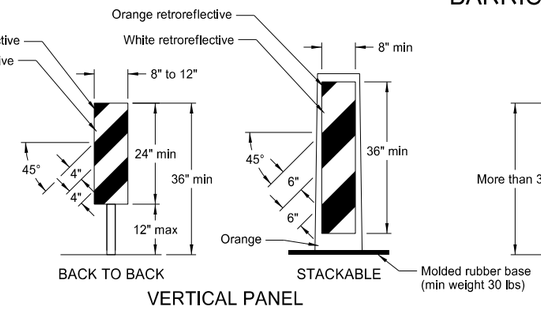

VERTICAL PANEL

Markings for vertical panels shall be alternating orange and white retroreflective stripes, sloping downward in the direction vehicular traffic is to pass. Retroreflective sheeting shall be placed on both sides of panel and shall have a minimum of 270 square inches of retroreflective area facing vehicular traffic. Where the height of the retroreflective material on the vertical panel is 36 inches or more, a stripe width of 6 inches shall be used.

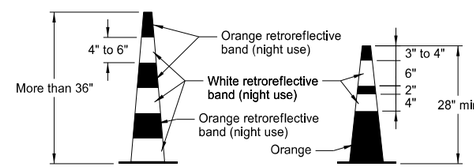

TRAFFIC CONE

Retroreflectorization of cones more than 36" in height shall be provided by alternating orange and white retroreflective stripes. Each cone shall have a minimum of two orange and two white stripes with the top stripe being orange. Any nonretroreflectorized space between the orange and white stripes shall not exceed 3" wide.

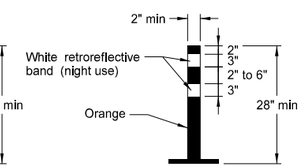

TUBULAR MARKER

Retroreflectorization of tubular markers more than 42" in height shall be provided by alternating four 4" to 6" wide orange and white stripes with the top stripe being orange.

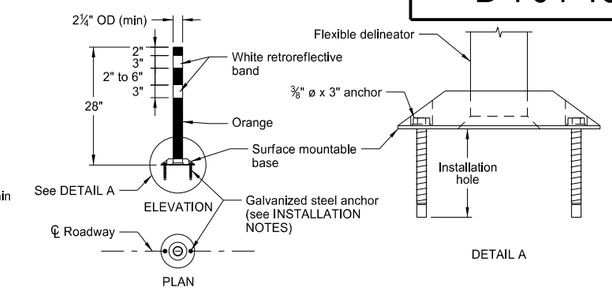

FLEXIBLE DELINEATOR

INSTALLATION NOTES:

1. Drill installation holes to diameter and depth as required by manufacturer's specifications.
2. For removal, remove anchors and fill installation hole with an epoxy designed to bond to pavement surface.
3. In lieu of bolted down base, the contractor may use an 8" x 8" butyl pad or hot melt butyl. Butyl shall be removed as close as possible to pavement surface.

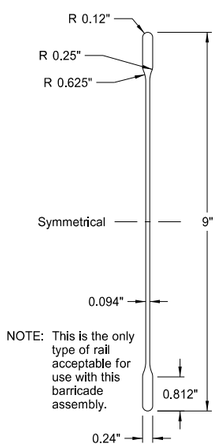

NOTE: This is the only type of rail acceptable for use with this barricade assembly.

BARRICADE BLADE DETAIL

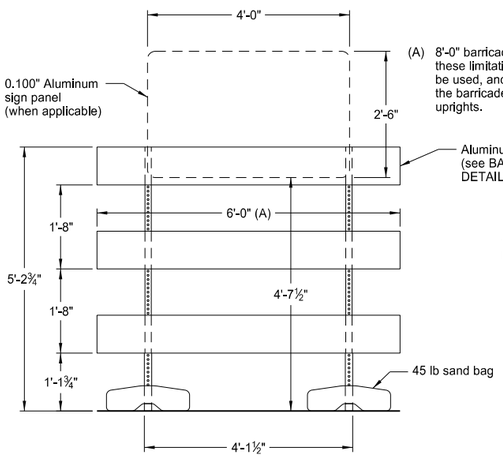

(A) 8'-0" barricade rails may be used with these limitations: 1) no sign panel can be used, and 2) no more than 1'-0" of the barricade rail can extend past the uprights.

ELEVATION VIEW

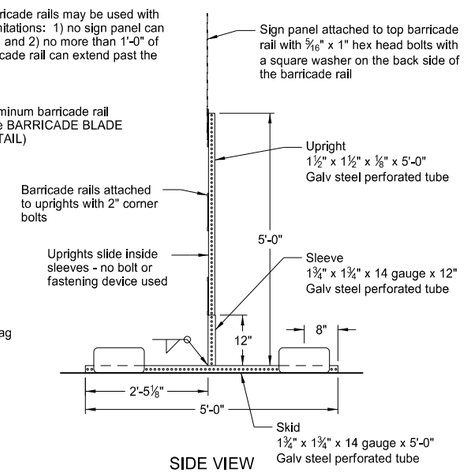

SIDE VIEW

BARRICADE ASSEMBLY DETAIL
(Aluminum Barricade Rails)

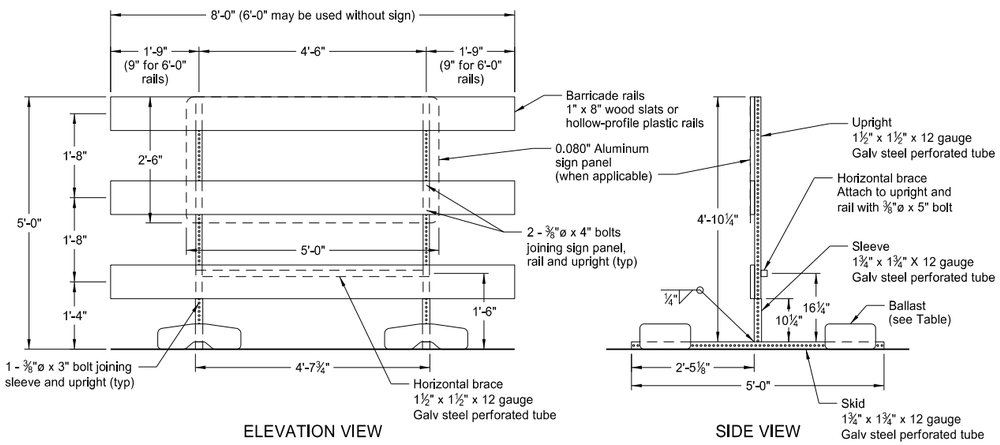

ELEVATION VIEW

SIDE VIEW

BARRICADE ASSEMBLY DETAIL
(Wood or Plastic Rails)

NOTE: Markings for barricades shall be alternating orange and white retroreflective stripes, sloping downward in the direction traffic is to pass. Retroreflective sheeting shall be placed on both sides of the rails and shall have a minimum of 270 square inches of visible retroreflective area facing vehicular traffic. When the barricade length is less than 36", the rail stripe width shall be 4".

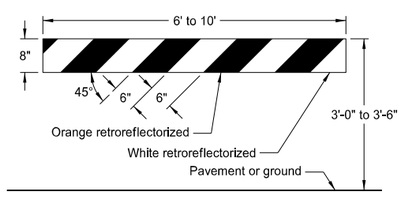

TYPE I BARRICADE

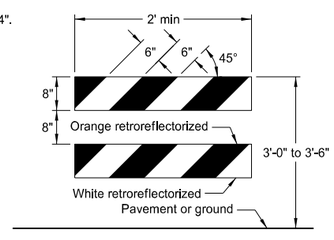

TYPE II BARRICADE

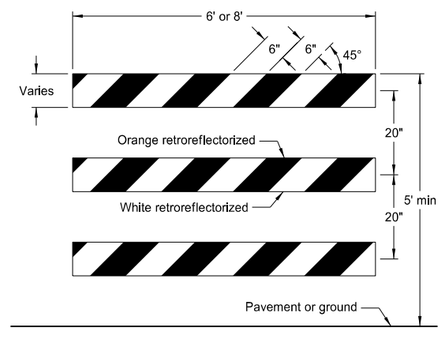

TYPE III BARRICADE

BARRICADE RAIL DETAILS

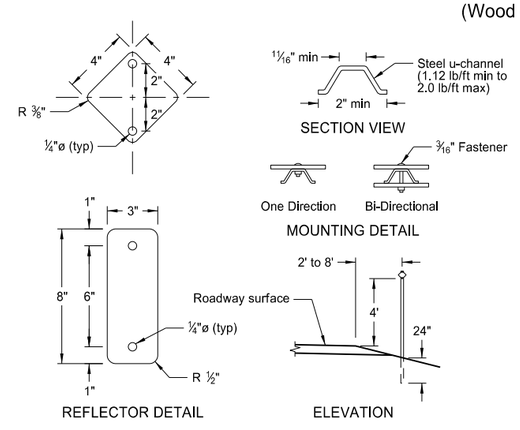

DELINEATORS

MINIMUM BALLAST
(For each side of barricade support)

Without Sign	4 - 25 lb sandbags
With Sign	6 - 25 lb sandbags

Note: The number of sandbags are based on a wind speed of 55 MPH. The sandbags are assumed to be placed at or near the ends of the skids.

NORTH DAKOTA DEPARTMENT OF TRANSPORTATION	
10-3-13	
REVISIONS	
DATE	CHANGE

This document was originally issued and sealed by Roger Weigel, Registration Number PE- 2930, on 10/3/13 and the original document is stored at the North Dakota Department of Transportation

CONSTRUCTION SIGN PUNCHING AND MOUNTING DETAILS

D-704-14

Note: Signs placed in sections with curb shall have a minimum horizontal clearance of 2' from the face of the curb to the near edge of the sign.

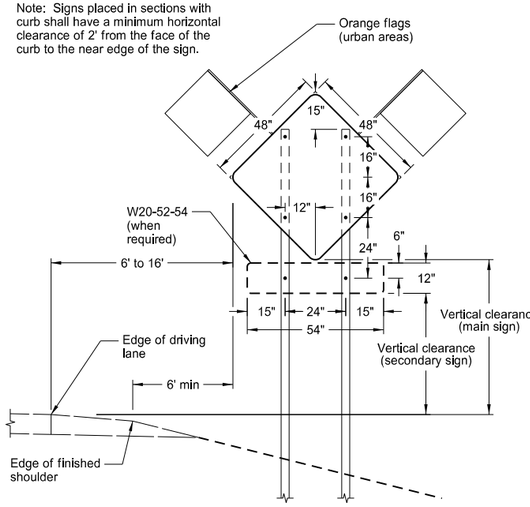

TYPICAL SECTION
(48" x 48" diamond warning sign shown)

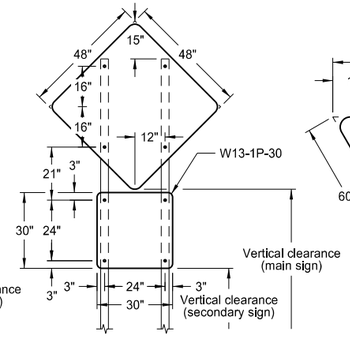

48" x 48" DIAMOND SIGN
(with 30" x 30" secondary sign)

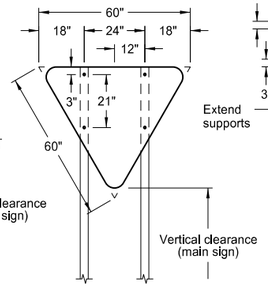

R1-2-60 - YIELD SIGN

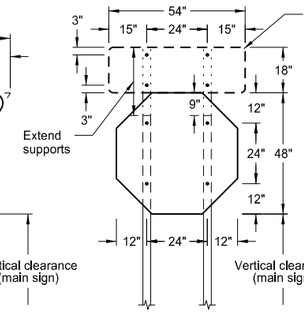

R1-1-48 - STOP SIGN
(with R6-1-54 sign as required)

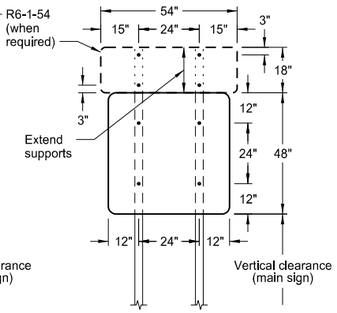

48" x 48" SIGN
(with R6-1-54 sign as required)

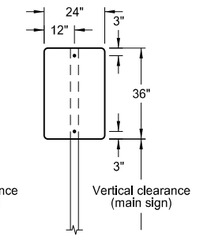

24" x 36" SIGN

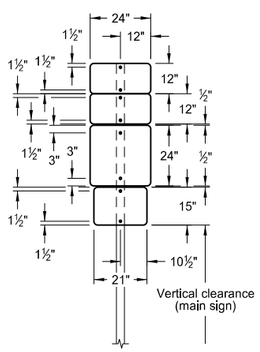

24" x 24"
ROUTE MARKER
ASSEMBLY

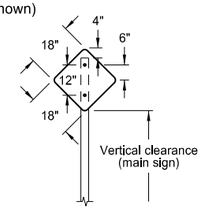

18" x 18"
DIAMOND SIGN

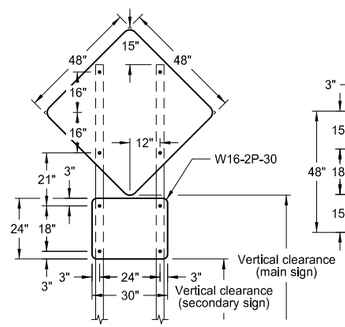

48" x 48" DIAMOND SIGN
(with 30" x 24" secondary sign)

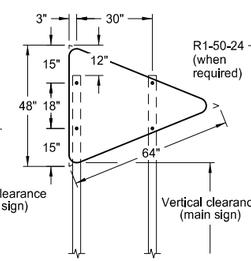

W14-3-64 - PENNANT SIGN

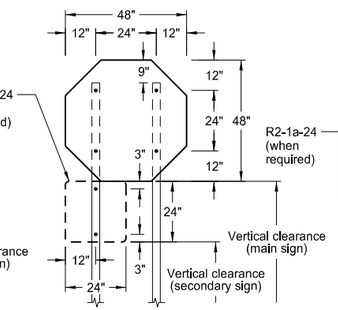

R1-1-48 - STOP SIGN
(with R1-50-24 sign as required)

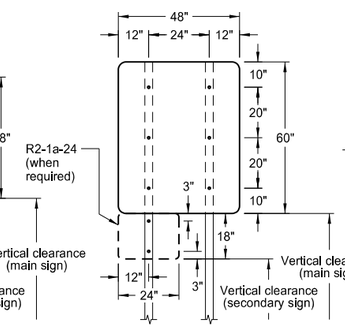

48" x 48" SIGN
(with R2-1a-24 sign as required)

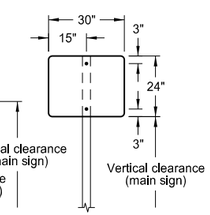

30" x 24" SIGN

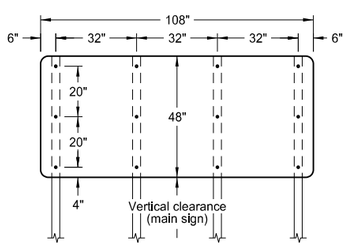

108" x 48" SIGN

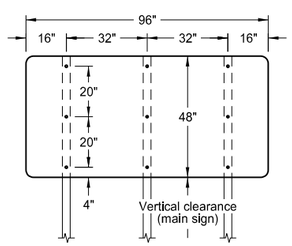

96" x 48" SIGN

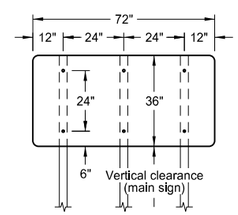

72" x 36" SIGN

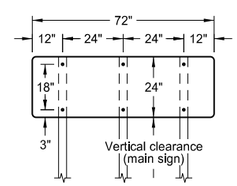

72" x 24" SIGN

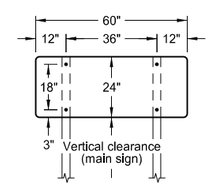

60" x 24" SIGN

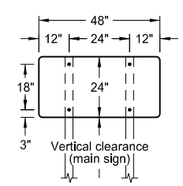

48" x 24" SIGN

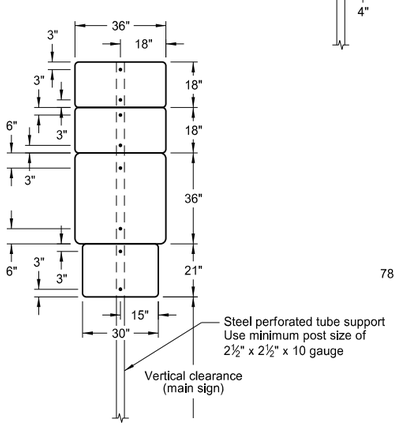

36" x 36"
ROUTE MARKER
ASSEMBLY

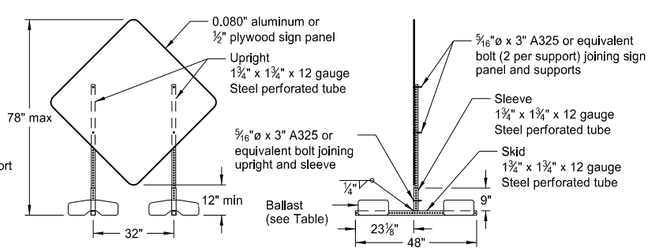

PORTABLE SIGN SUPPORT
LOW-MOUNTING HEIGHT

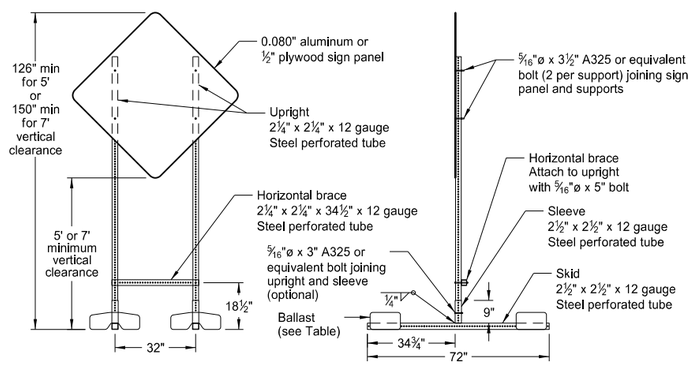

PORTABLE SIGN SUPPORT
HIGH-MOUNTING HEIGHT

NOTES:

1. Sign Supports: Supports shall be galvanized or painted. Minimum post sizes are 2.5 lb/ft u-channel or 2" x 2" x 12 gauge steel perforated tube, except where noted. When installing signs on u-channel, the minimum post size for assemblies containing a secondary sign is 3.0 lb/ft. Post sizes are based on a wind speed of 55 MPH.

   Signs over 50 square feet should be installed on 2½" x 2½" perforated tube supports as a minimum.

   Guy wires shall not be attached to sign supports. Wind beams may be attached to u-posts behind the sign panels.

2. Sign Panels: Provide sign panels made of 0.100" aluminum, ½" plywood, or other approved material, except where noted. All holes to be punched round for ⅜" bolts.

3. Alternate Messages: The signs that have alternate messages may have these alternate messages placed on a reflectorized plate (without a border) and installed and removed as required. (i.e. "Left" and "Right" message on a lane closure sign)

4. Route Marker Auxiliary Signs: Provide route marker auxiliary signs, such as the cardinal direction and directional arrows, with a background and legend that match the route marker they are used with:

   Interstate - white legend on blue background
   Interstate Business Loop - white legend on green background
   US and State - black legend on white background
   County - yellow legend on blue background

5. Vertical Clearance: Install signs with a vertical clearance of 5'-0" (see TYPICAL SECTION.) In areas where parking or pedestrian movements are likely or the view of the sign may be obstructed, install signs with a vertical clearance of 7'-0" from the top of the curb or from the near edge of the driving lane in absence of a curb.

   The vertical clearance to secondary signs is 1'-0" less than the vertical clearance as stated above.

   Large signs having an area exceeding 50 square feet shall have a minimum clearance of 7'-0" from the ground at the post.

6. Portable Signs: Provide portable signs that meet the vertical clearance as stated above. Use portable signs when it is necessary to place signs within the pavement surface.

   When portable signs are used for 5 days or less, low-mounting height (minimum 12" vertical clearance) sign supports may be used as long as the view of the sign is not obstructed. Time delays caused by unforseen circumstances, such as equipment breakdown, rain, subgrade failures, etc., will not accrue towards the 5 day period. The R9-8 through R9-11a series, W1-6 through W1-8 series, M4-10, and E5-1 may be used for longer than 5 days.

   Signs mounted to the portable sign supports shown in the LOW-MOUNTING HEIGHT and HIGH-MOUNTING HEIGHT Details shall have a maximum surface area of 16 square feet.

MINIMUM BALLAST
(For each side of sign support base)

Sign Panel Mounting Height (ft)	Number of 25 lb sandbags for 4' x 4' sign panel
1'	6
5'	8
7'	10

Note: The number of sandbags are based on a wind speed of 55 MPH. The sandbags are assumed to be placed at or near the ends of the skids.

NORTH DAKOTA DEPARTMENT OF TRANSPORTATION	
10-4-13	
REVISIONS	
DATE	CHANGE
11-14-13	Revised Note 6.

This document was originally issued and sealed by Roger Weigel, Registration Number PE- 2930, on 11/14/13 and the original document is stored at the North Dakota Department of Transportation

ROAD CLOSURE AND LANE CLOSURE ON A TWO WAY ROAD LAYOUTS

D-704-19

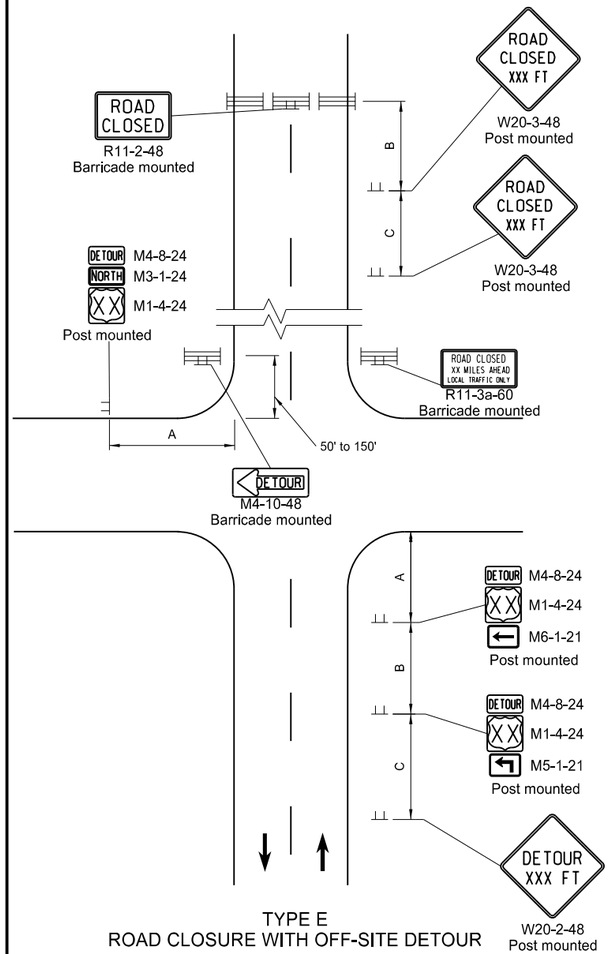

TYPE E
ROAD CLOSURE WITH OFF-SITE DETOUR

Used where a road is closed beyond a detour point. Signing shown for one direction only. Sign not shown on detour shall be shown in plans and installed and maintained by the contractor.

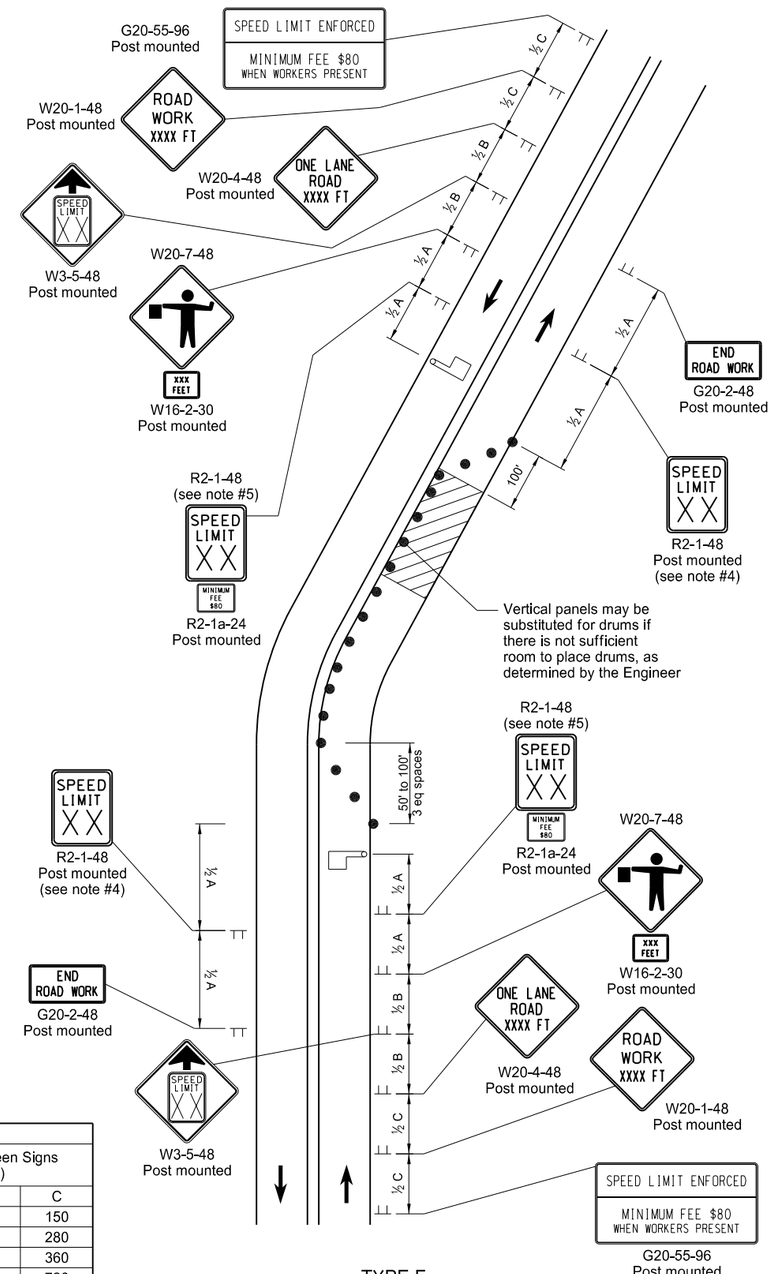

TYPE F
LANE CLOSURE ON A TWO LANE ROAD USING FLAGGERS

Two lane highway with one lane closed. Flagger is at a point where it is visible to approaching traffic.

Notes

1. Variables
   S = Numerical value of speed limit or 85th percentile.
   W = The width of taper
   L = Minimum length of taper, or S x W for freeways, expressways, and all other roads with speeds of 45 mph or greater, or
   W x $S^2/60$ for urban, residential, and other streets with speeds of 40 mph or less.
2. Barricades placed on roadway shall be on a moveable assembly. Signs placed on the roadway shall be placed on skid mounted assemblies.
3. Delineator drums used for tapering traffic shall be placed at 3 equal spaces. Delineator drums for tangents shall be spaced at 2 times dimension "S".
4. The speed limit shall be re-established. The exact speed limit shall be determined in the field, dependent on location and conditions.
5. The reduced speed limit shall be determined dependent on the in place speed limit before construction. The speed limit reduction should not exceed 10 mph below the existing speed limit, unless the design speed of the work zone feature has been reduced below the 10 mph. In this case, the speed limit reduction shall not exceed 30 MPH. Where speed limits are to be reduced more than 30 MPH, a second speed limit sign shall be installed with the desired speed reduction but shall not exceed 30 MPH. The second speed limit sign shall be placed at 1/2 B.
6. When warning signs are used in urban areas and the signs are not portable, flags shall be installed. The flags shall be 24 inches square, mounted perpendicular to the edges of the diamond sign, and at such a distance above the edge so that when the flag is limp it will not touch the sign. Rural areas will not require flags.
7. Existing speed limit signs within a reduced speed zone shall be covered.
8. Where necessary, safe speed to be determined by the Engineer.
9. The contractor has the option of using portable sign supports in lieu of post mounted signs in accordance with the NDDOT Standard Specifications.
10. G20-55-96 or R2-1a-24 sign are not required when a pilot car operation is used, if this standard is part of other traffic control layouts, or the work is less than 15 days.
11. When highway-rail grade crossings exist either within or in the vicinity of the roadway work activities:
    a. Extra care shall be taken to minimize the probability of conditions being created, either by lane restrictions, flagging or other operations, where vehicles might be stopped within the highway-rail grade crossing (considered as being 15 feet on either side of the closest and farthest rail.)
    b. A "Do Not Stop on Tracks" sign (R8-8-24) should be placed near the cross buck in each direction while the lane closure is in the vicinity of the tracks.
    c. A buffer space between the work zone and the lane closure transition should be extended upstream of the highway-rail grade crossing so a queue created by the flagging operation will not extend across the highway-rail grade crossing.
    d. If the queuing of vehicles across active rail tracks cannot be avoided, a flagger shall be provided at the highway-rail grade crossing to prevent vehicles from stopping within the highway-rail grade crossing, even if automatic warning devices are in place.

ADVANCE WARNING SIGN SPACING

Road Type	Distance Between Signs Min. (ft)		
	A	B	C
Urban - Low Speed (30 mph or less)	150	150	150
Urban - Low Speed (over 30 to 40mph)	280	280	280
Urban - High Speed (over 40 mph to 50 mph)	360	360	360
Rural - High Speed (over 50 mph to 65 mph)	720	720	720
Urban Expressway and Freeway (55 mph to 60 mph)	850	1350	2200
Rural Expressway and Freeway (70 mph to 75 mph)	1000	1500	2640
Interstate/4-Lane Divided (Maintenance and Surveying)	750	1000	1500

KEY

- Delineator Drum
- Type III Barricade
- Flagger
- Sign
- Work/Hazard Area

NORTH DAKOTA DEPARTMENT OF TRANSPORTATION

9-27-13

REVISIONS

DATE	CHANGE
3-13-14	Revised Sign Cell "ROAD WORK XXX FT"

This document was originally issued and sealed by Roger Weigel Registration Number PE-2930, on 03/13/14 and the original document is stored at the North Dakota Department of Transportation

CONSTRUCTION TRUCK AND TEMPORARY DETOUR LAYOUTS

D-704-22

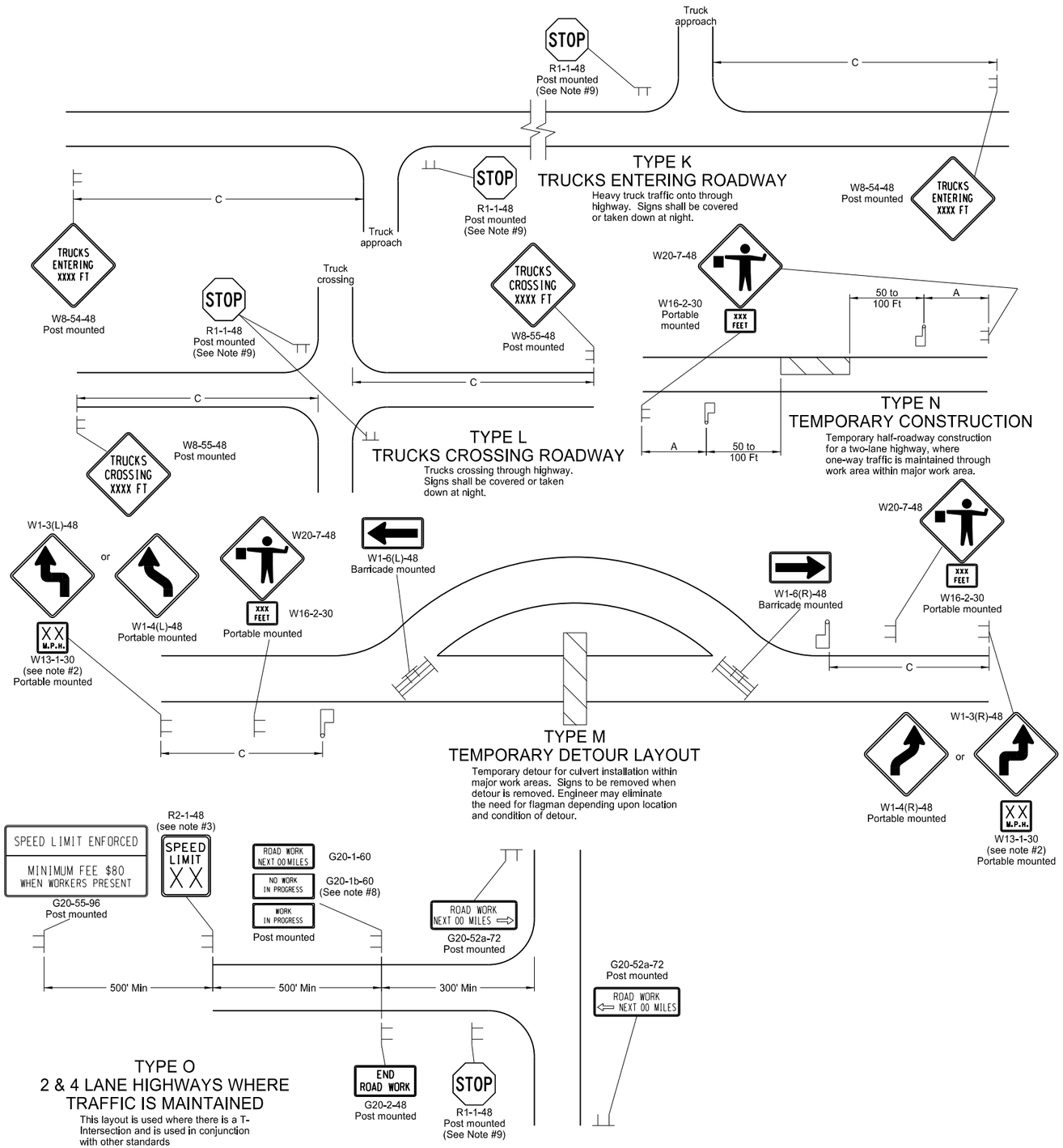

Notes

1. Barricades placed on roadway shall be on a moveable assembly. Signs placed on the roadway shall be placed on skid mounted assemblies.
2. Where necessary, safe speed to be determined by the Engineer.
3. The reduced speed limit shall be determined dependent on the in place speed limit before construction. The speed limit reduction should not exceed 10 mph below the existing speed limit, unless the design speed of the work zone feature has been reduced below the 10 mph. In this case, the speed limit reduction shall not exceed 30 MPH. Where speed limits are to be reduced more than 30 MPH, a second speed limit sign shall be installed with the desired speed reduction but shall not exceed 30 MPH. The second speed limit sign shall be placed at ½ B.
4. When warning signs are used in urban areas and the signs are not portable, flags shall be installed. The flags shall be 24 inches square, mounted perpendicular to the edges of the diamond sign, and at such a distance above the edge so that when the flag is limp it will not touch the sign. Rural areas will not require flags.
5. Existing speed limit signs within a reduced speed zone shall be covered.
6. Obliterated or covered pavement marking shall be paid for as Obliteration of Pavement Marking. The covering shall be approved by the engineer.
7. The contractor has the option of using portable sign supports in lieu of post mounted signs in accordance with the NDDOT Standard Specifications.
8. The contractor shall install the G20-1b-60 sign when work is suspended for winter.
9. If existing stop sign is in place, a 48" stop sign is not required.
10. G20-55-96 sign is not required if this standard is part of other traffic control layouts with this sign or the work is less than 15 days.

KEY

Type III barricade — Work area

Sign — Flagger

ADVANCE WARNING SIGN SPACING			
Road Type	Distance Between Signs Min. (ft)		
	A	B	C
Urban - Low Speed (30 mph or less)	150	150	150
Urban - Low Speed (over 30 to 40mph)	280	280	280
Urban - High Speed (over 40 mph to 50 mph)	360	360	360
Rural - High Speed (over 50 mph to 65 mph)	720	720	720
Urban Expressway and Freeway (55 mph to 60 mph)	850	1350	2200
Rural Expressway and Freeway (70 mph to 75 mph)	1000	1500	2640
Interstate/4-Lane Divided (Maintenance and Surveying)	750	1000	1500

NORTH DAKOTA DEPARTMENT OF TRANSPORTATION	
9-27-13	
REVISIONS	
DATE	CHANGE

This document was originally issued and sealed by Roger Weigel Registration Number PE- 2930, on 09/27/13 and the original document is stored at the North Dakota Department of Transportation

SHOULDER CLOSURES AND BRIDGE PAINTING LAYOUTS

D-704-24

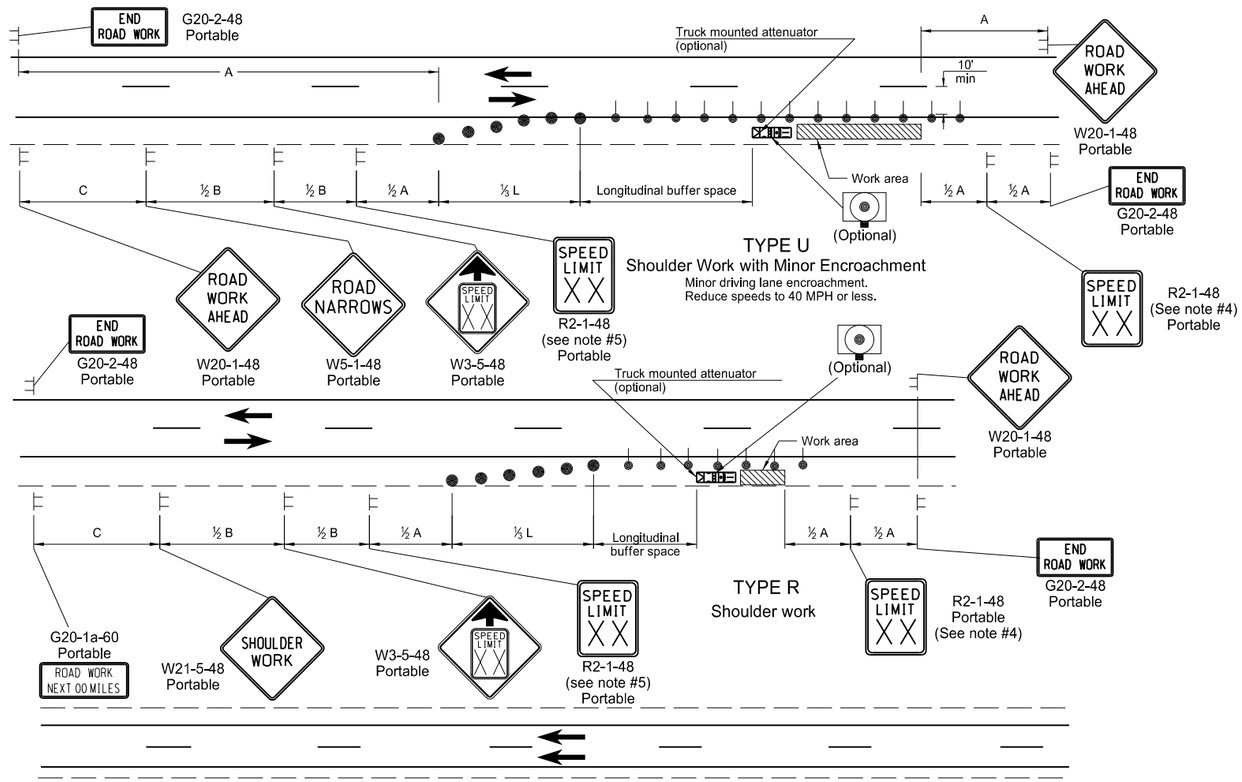

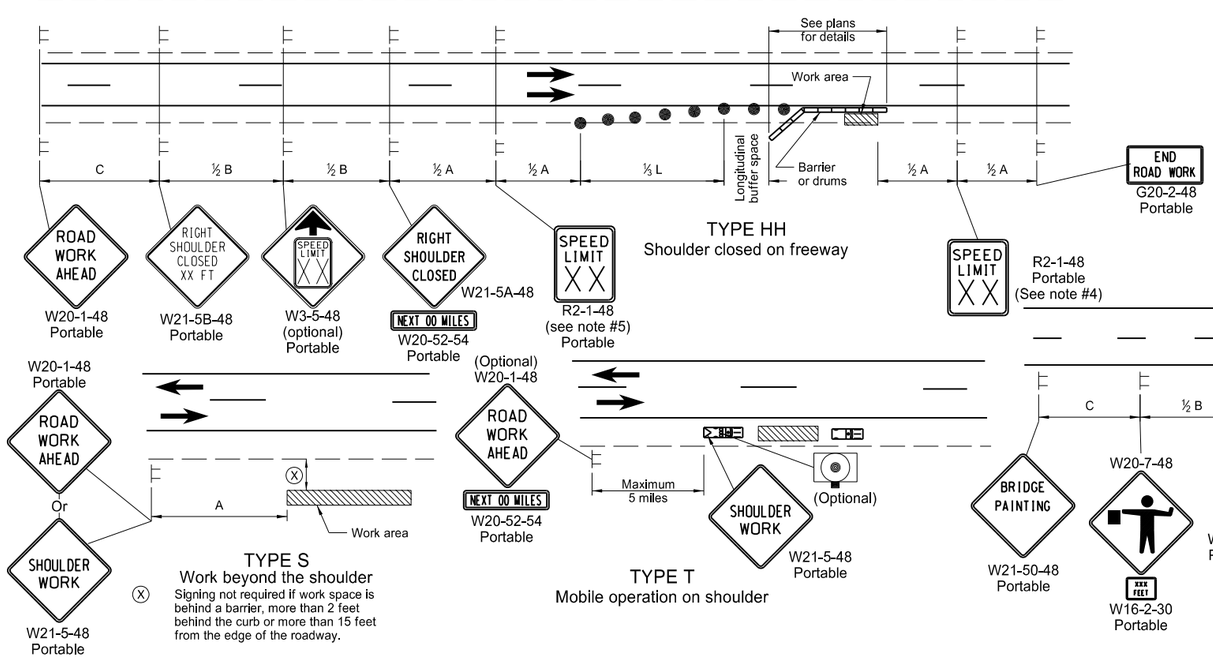

Notes

1. Variables
   S = Numerical value of speed limit or 85th percentile.
   W = The width of the taper.
   L = Minimum length of taper, or S x W for freeways, expressways, and all other roads with speeds of 45 mph or greater, or W x S^2 /60 for urban, residential, and other streets with speeds of 40 mph or less.
2. Delineator drums used for tapering traffic shall be spaced at dimension "S".
   Delineator drums or tubular markers used for tangents shall be spaced at 2 times "S".
3. Sequencing Arrow Panels
   Type A shall be used on roadways with slow moving traffic speeds and low volume (25 mph or less and 750 ADT or less).
   Type B shall be used on roadways with moderate traffic speeds and volumes (40 mph or less and 5000 ADT or less).
   Type C shall be used on roadways with high traffic speeds and volumes (over 40 mph or over 5000 ADT).
4. The speed limit shall be re-established. The exact speed limit shall be determined in the field, dependent on location and conditions.
5. The reduced speed limit shall be determined dependent on the in place speed limit before construction. The speed limit reduction should not exceed 10 mph below the existing speed limit, unless the design speed of the work zone feature has been reduced below the 10 mph. In this case, the speed limit reduction shall not exceed 30 MPH. Where speed limits are to be reduced more than 30 MPH, a second speed limit sign shall be installed with the desired speed reduction but shall not exceed 30 MPH. The second speed limit sign shall be placed at ½B.
6. When warning signs are used in urban areas and the signs are not portable, flags shall be installed. The flags shall be 24 inches square, mounted perpendicular to the edges of the diamond sign, and at such a distance above the edge so that when the flag is limp it will not touch the sign. Rural areas will not require flags.
7. Existing speed limit signs within a reduced speed zone shall be covered.
8. The contractor has the option of using portable sign supports in lieu of post mounted signs in accordance with the NDDOT Standard Specifications.

Longitudinal Buffer Space	
Speed (mph)	Length Min (feet)
20	115
25	155
30	200
35	250
40	305
45	360
50	425
55	495
60	570
65	645
70	730
75	820

ADVANCE WARNING SIGN SPACING			
Road Type	Distance Between Signs Min. (ft)		
	A	B	C
Urban - Low Speed (30 mph or less)	150	150	150
Urban - Low Speed (over 30 to 40 mph)	280	280	280
Urban - High Speed (over 40 mph to 50 mph)	360	360	360
Rural - High Speed (over 50 mph to 65 mph)	720	720	720
Urban Expressway and Freeway (55 mph to 60 mph)	850	1350	2200
Rural Expressway and Freeway (70 mph to 75 mph)	1000	1500	2640
Interstate/4-Lane Divided (Maintenance and Surveying)	750	1000	1500

KEY

- Sign
- Work area
- Delineator Drum
- Tubular Marker
- Sequencing Arrow Panel (Caution Mode)

NORTH DAKOTA DEPARTMENT OF TRANSPORTATION

9-27-13

REVISIONS

DATE	CHANGE

This document was originally issued and sealed by Roger Weigel Registration Number PE- 2930, on 09/27/13 and the original document is stored at the North Dakota Department of Transportation

MISCELLANEOUS SIGN LAYOUTS

D-704-26

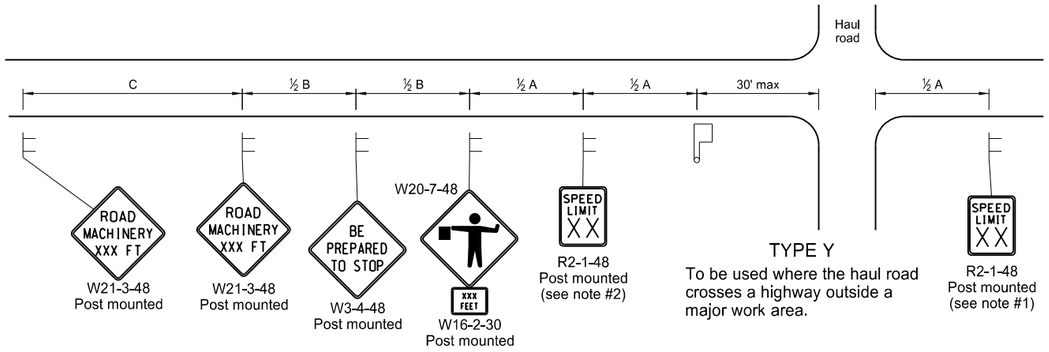

TYPE Y

To be used where the haul road crosses a highway outside a major work area.

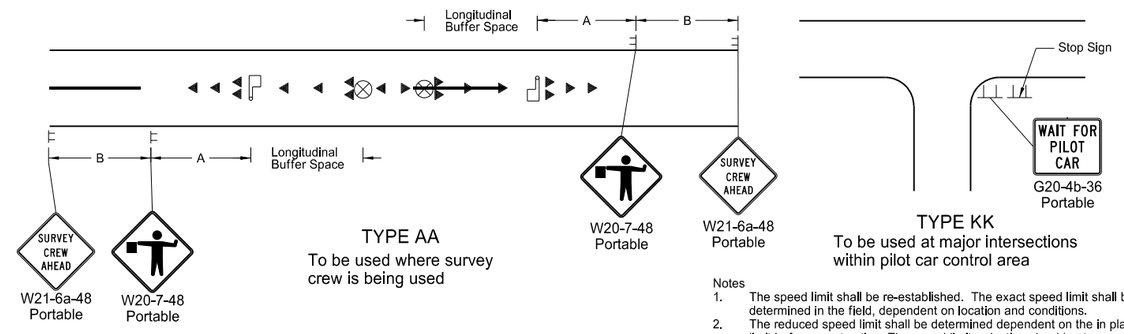

TYPE AA

To be used where survey crew is being used

TYPE KK

To be used at major intersections within pilot car control area

Notes

1. The speed limit shall be re-established. The exact speed limit shall be determined in the field, dependent on location and conditions.
2. The reduced speed limit shall be determined dependent on the in place speed limit before construction. The speed limit reduction should not exceed 10 mph below the existing speed limit, unless the design speed of the work zone feature has been reduced below the 10 mph. In this case, the speed limit reduction shall not exceed 30 MPH. Where speed limits are to be reduced more than 30 MPH, a second speed limit sign shall be installed with the desired speed reduction but shall not exceed 30 MPH. The second speed limit sign shall be placed at ½ B.
3. When warning signs are used in urban areas and the signs are not portable, flags shall be installed. The flags shall be 24 inches square, mounted perpendicular to the edges of the diamond sign, and at such a distance above the edge so that when the flag is limp it will not touch the sign. Rural areas will not require flags.
4. Existing speed limit signs within a reduced speed zone shall be covered.
5. The contractor has the option of using portable sign supports in lieu of post mounted signs in accordance with the NDDOT Standard Specifications.
6. G20-55-96 signs are not required if this standard is part of other traffic control layouts, or the work is less than 15 days.
7. When a pilot car operation is used, place a G20-4b-36 "Wait For Pilot Car" sign at major intersections within pilot car control area.

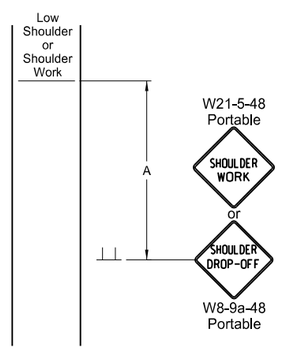

TYPE BB

To be used within a major work area where the sign conditions exist

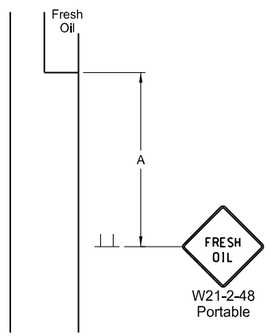

TYPE CC

To be used where the sign conditions exist

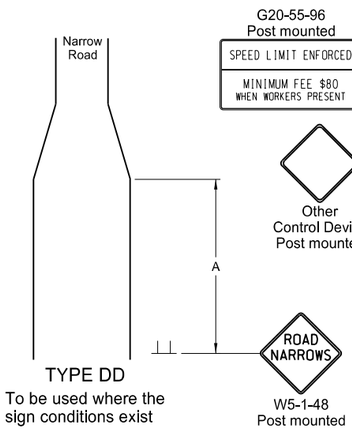

TYPE DD

To be used where the sign conditions exist

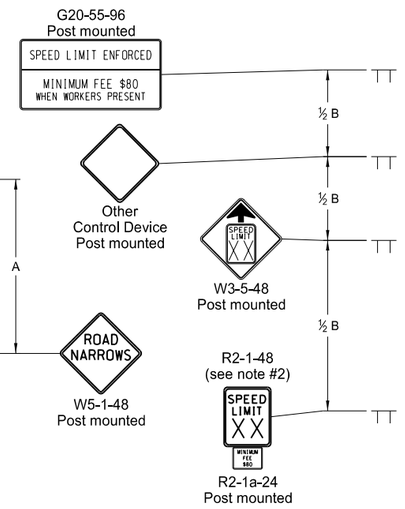

TYPE Z

To be used where speed zone is needed

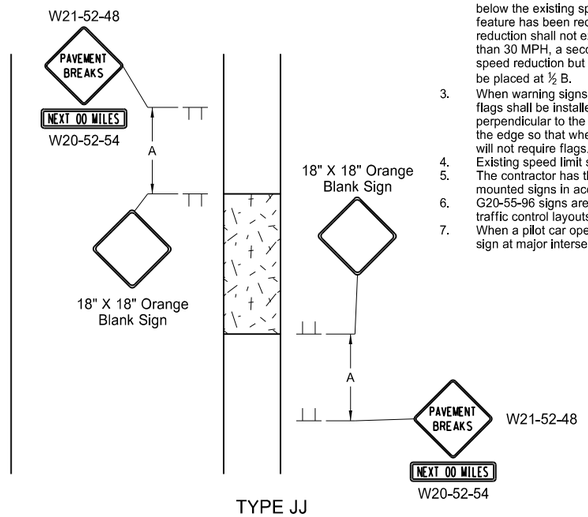

TYPE JJ

To be used where there is a break in the pavement. These signs may be skid mounted or post mounted and shall be installed when conditions exist and removed when not applicable.

Longitudinal Buffer Space	
*Speed (mph)	Length Min (feet)
20	115
25	155
30	200
35	250
40	305
45	360
50	425
55	495
60	570
65	645
70	730
75	820

* Posted speed, off-peak 85th percentile speed prior to work starting, or the anticipated operating speed in mph.

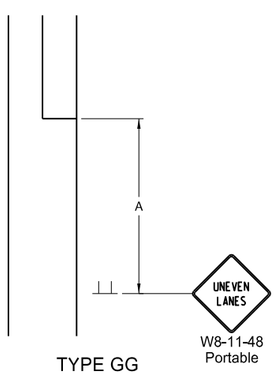

TYPE GG

To be used where a difference of elevation between lanes exist

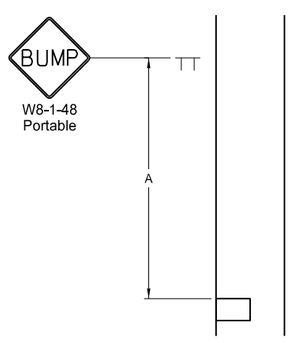

TYPE EE

To be used where the sign conditions exist

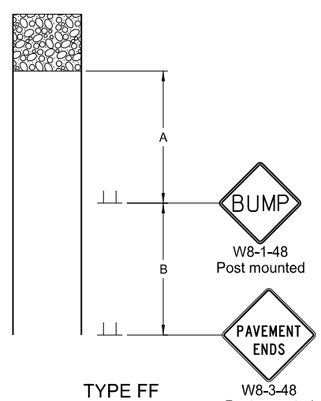

TYPE FF

To be used where the sign conditions exist

ADVANCE WARNING SIGN SPACING			
Road Type	Distance Between Signs Min. (ft)		
	A	B	C
Urban - Low Speed (30 mph or less)	150	150	150
Urban - Low Speed (over 30 to 40 mph)	280	280	280
Urban - High Speed (over 40 mph to 50 mph)	360	360	360
Rural - High Speed (over 50 mph to 65 mph)	720	720	720
Urban Expressway and Freeway (55 mph to 60 mph)	850	1350	2200
Rural Expressway and Freeway (70 mph to 75 mph)	1000	1500	2640
Interstate/4-Lane Divided (Maintenance and Surveying)	750	1000	1500

KEY

Sign — Flagger

Cones

NORTH DAKOTA DEPARTMENT OF TRANSPORTATION	
9-27-13	
REVISIONS	
DATE	CHANGE

This document was originally issued and sealed by Roger Weigel Registration Number PE- 2930, on 09/27/13 and the original document is stored at the North Dakota Department of Transportation

TRAFFIC CONTROL PLAN FOR MOVING OPERATIONS

D-704-27

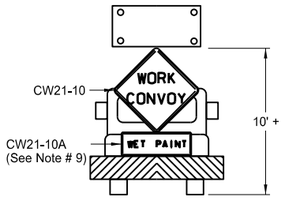

Typical Shadow Vehicle 1
Two-Way Roaday

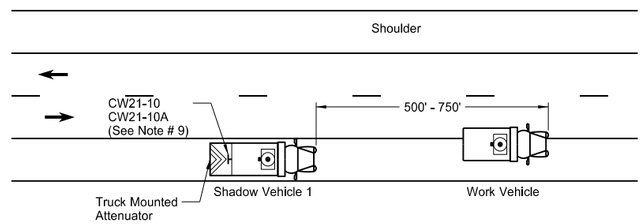

Two-Way Roadway with Paved Shoulders

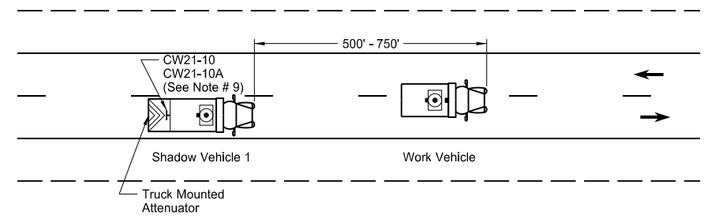

Two-Way Roadway without Paved Shoulders

Notes

1. If the contractor chooses to place more vehicles in the convoy than are shown, these vehicles shall have the truck mounted attenuator and shall be at the contractor's expense.
2. Shadow and work vehicles shall display yellow rotating beacons or strobe lights unless otherwise stated elsewhere in the plans.
3. Flashing arrow panels shall be Type B or Type C. The panel operation shall be controlled from inside the vehicle.
4. Each vehicle shall have two-way electronic communication capability.
5. When work convoys must change lanes, shadow vehicle 1 should change lanes first to shadow other convoy vehicles.
6. Vehicle spacing between the shadow vehicle 1 and shadow vehicle 2 will vary depending on sight distance restrictions. Motorists approaching the work convoy should be able to see the trail vehicle in time to slow down and/or change lanes as they approach the shadow vehicle.
7. Sign Colors
   Letters = Black
   Border = Black
   Background = Orange
8. Shadow vehicle 2 may be used as the paint tender vehicle.
9. Sign CW21-10A shall only be used during a painting operation.
10. On two lane - two way roadways, the work and shadow vehicles should pull over periodically to allow motor vehicle traffic to pass.

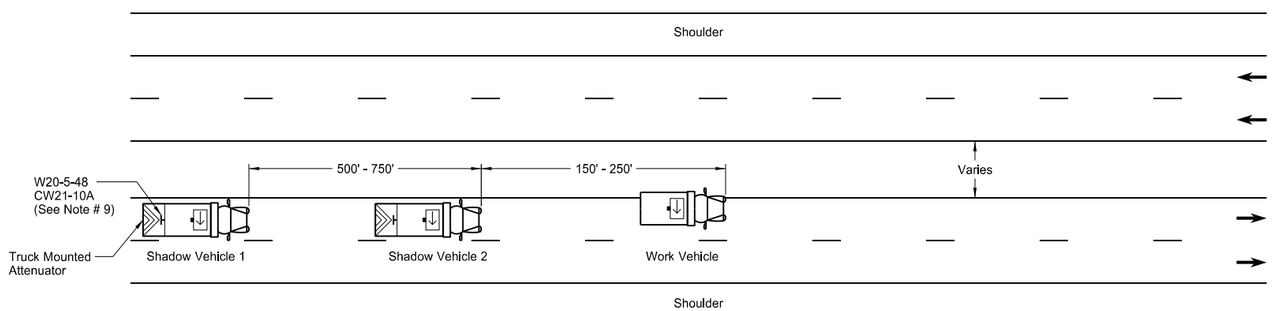

Undivided Multi-Lane Roadway

Sign Details

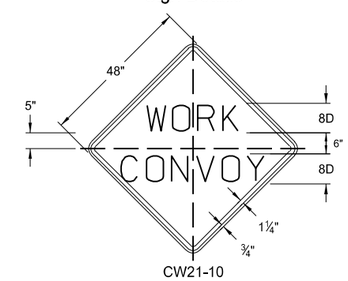

CW21-10

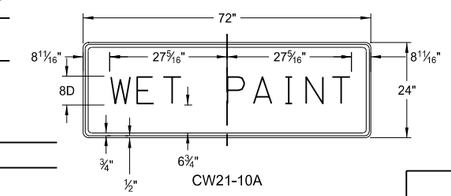

CW21-10A

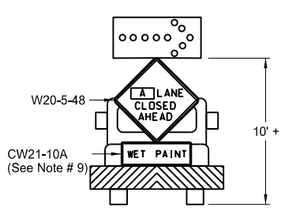

Typical Shadow Vehicle 1 & 2
Multi-Lane Highways

A = Left Right Center

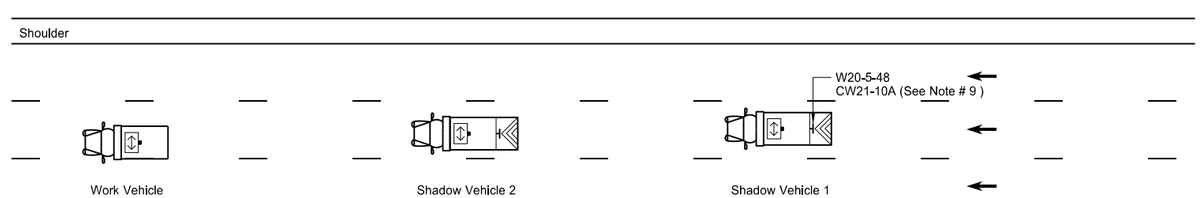

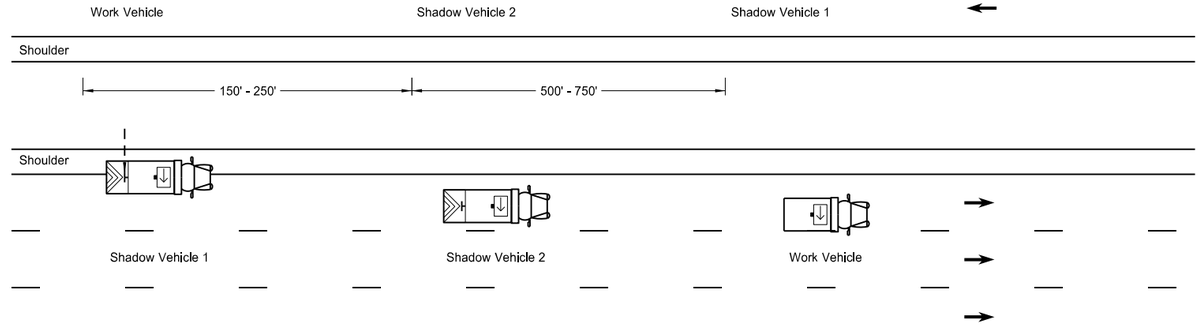

Divided Multi-Lane Highway

KEY

- Sign
- Truck mounted attenuator
- Flashing arrow panels:
  - Right directional
  - Left directional
  - Double arrow directional
  - Caution Mode

NORTH DAKOTA DEPARTMENT OF TRANSPORTATION	
9-27-13	
REVISIONS	
DATE	CHANGE
6-18-14	Removed shadow vehicle 2 on two lane roadways

This document was originally issued and sealed by Roger Weigel Registration Number PE- 2930, on 06/18/14 and the original document is stored at the North Dakota Department of Transportation

PORTABLE SIGN SUPPORT ASSEMBLY

D-704-50

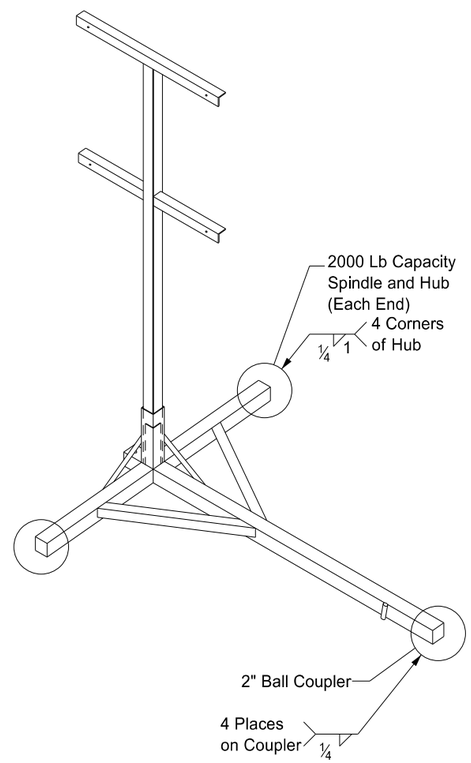

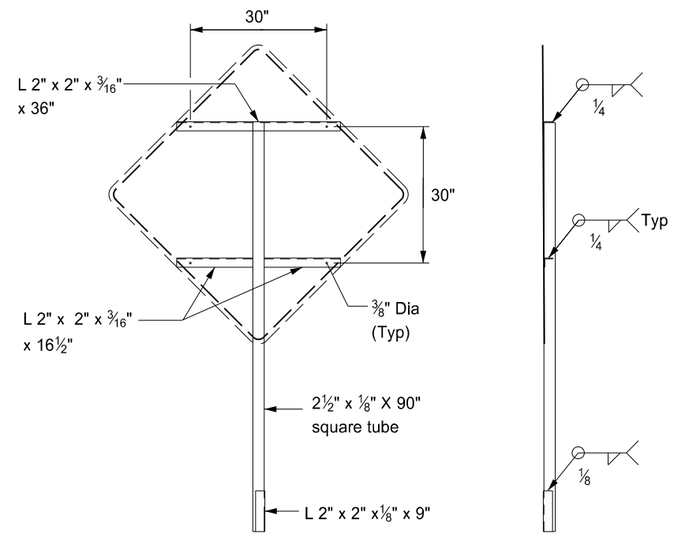

FRONT

RIGHT

SIGN SUPPORT

Notes:

1. The maximum weight of the assembly is 250 pounds.
2. Use a 14" wheel and tire.
3. Automotive and equipment axle assemblies may not be used for trailer-mounted sign supports.
4. Other NCHRP 350 crash tested assemblies are acceptable.

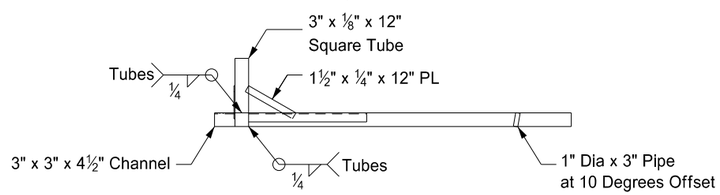

FRONT

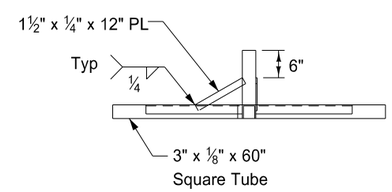

RIGHT

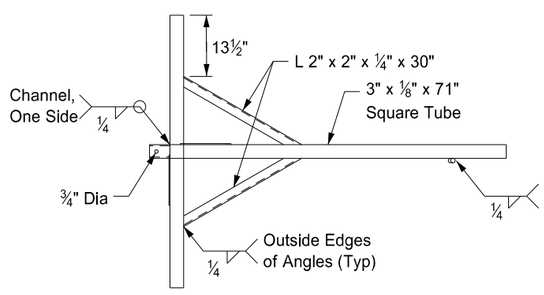

TOP

TRAILER

NORTH DAKOTA DEPARTMENT OF TRANSPORTATION	
11-23-10	
REVISIONS	
DATE	CHANGE

This document was originally issued and sealed by Roger Weigel Registration Number PE- 2930 , on 11/23/10 and the original document is stored at the North Dakota Department of Transportation

EROSION AND SILTATION CONTROLS
MEDIAN OR DITCH INLET PROTECTION

D-708-6

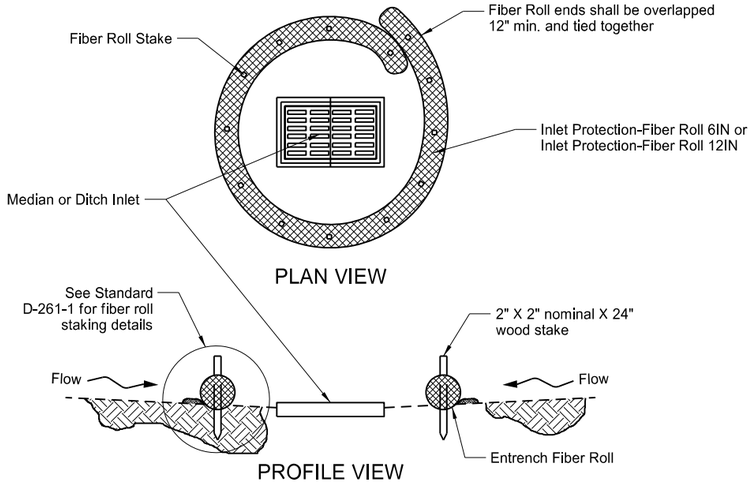

FIBER ROLL PROTECTION (MEDIAN OR DITCH INLET)

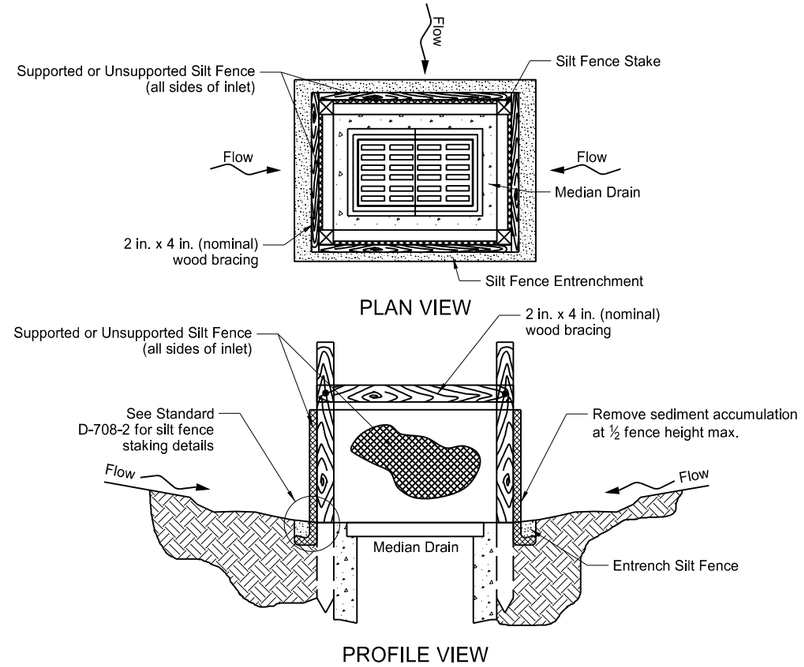

SILT FENCE PROTECTION (MEDIAN OR DITCH INLET)

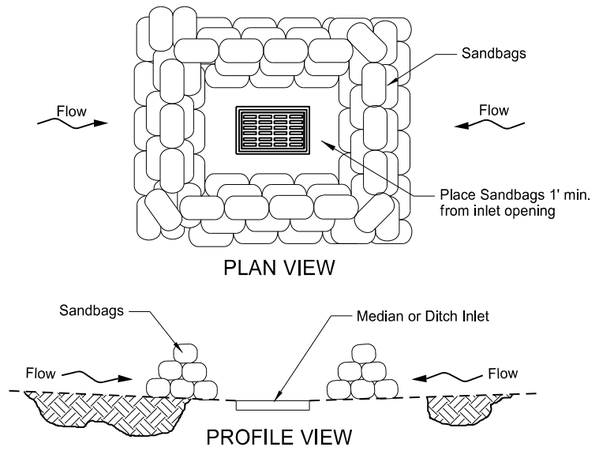

SANDBAG PROTECTION (LOW POINT)

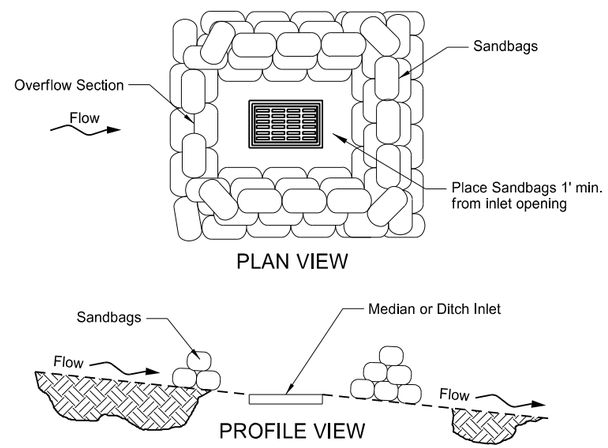

SANDBAG PROTECTION (ON SLOPE)

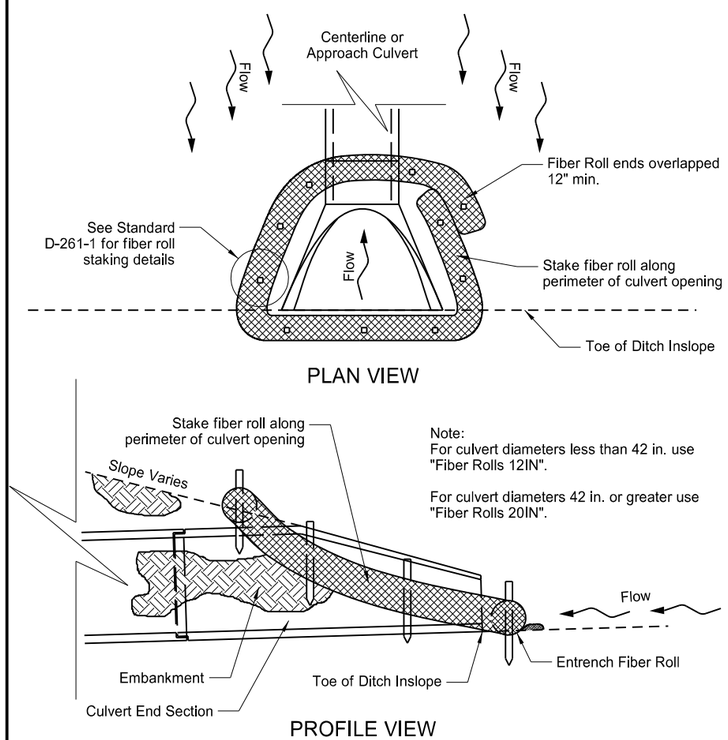

FIBER ROLL PROTECTION (INLET OF CULVERT)

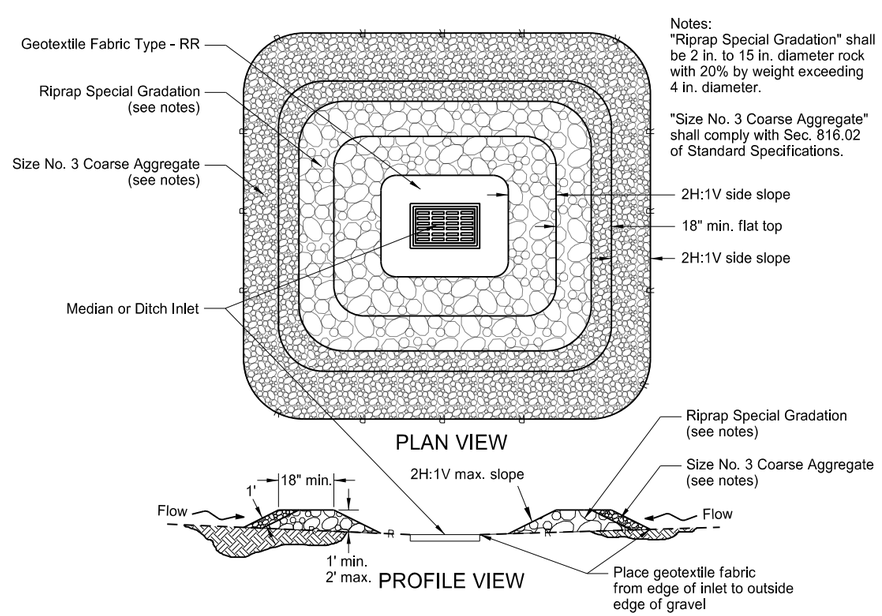

GRAVEL INLET PROTECTION (MEDIAN OR DITCH INLET)

NORTH DAKOTA DEPARTMENT OF TRANSPORTATION	
10-03-13	
REVISIONS	
DATE	CHANGE
06-26-14	Updated reference to standard drawing number for fiber roll staking details.

This document was originally issued and sealed by Roger Weigel Registration Number PE-2930, on 06/26/14 and the original document is stored at the North Dakota Department of Transportation

REINFORCED CONCRETE PIPE CULVERTS AND END SECTIONS
(Round Pipe)

D-714-1

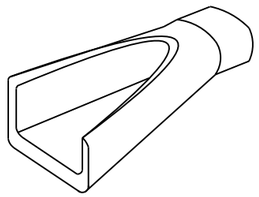

PERSPECTIVE

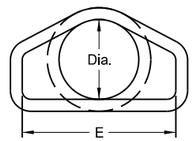

END VIEW

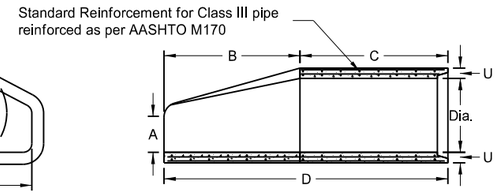

SIDE VIEW

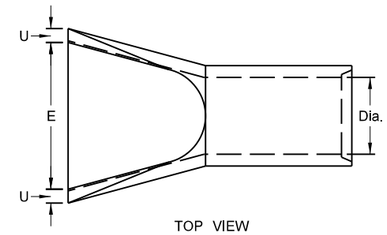

TOP VIEW

REINFORCED CONCRETE PIPE - FLARED END SECTION
Reinforcement to be equivalent to Class III RCP

FLARED END SECTION						
TERMINAL DIMENSIONS						
DIA	A	B	C	D	E	U
12	0'-4"	2'-0"	4'-0⅞"	6'-0⅞"	2'-0"	2"
15	0'-6"	2'-3"	3'-10"	6'-1"	2'-6"	2¼"
18	0'-9"	2'-3"	3'-10"	6'-1"	3'-0"	2½"
21	0'-9"	3'-0"	3'-1"	6'-1"	3'-6"	2¾"
24	0'-9½"	3'-7½"	2'-6"	6'-1½"	4'-0"	3"
27	0'-10½"	4'-0"	2'-1½"	6'-1½"	4'-6"	3¼"
30	1'-0"	4'-6"	1'-7¾"	6'-1¾"	5'-0"	3½"
36	1'-3"	5'-3"	2'-9"	8'-0"	6'-0"	4"
42	1'-9"	5'-3"	2'-9"	8'-0"	6'-6"	4½"
48	2'-0"	6'-0"	2'-0"	8'-0"	7'-0"	5"
54	2'-3"	5'-5"	2'-9¼"	8'-2¼"	7'-6"	5½"
60	2'-11"	5'-0"	3'-3"	8'-3"	8'-0"	5"
66	2'-6"	6'-0"	2'-3"	8'-3"	8'-6"	5½"
72	3'-0"	6'-6"	1'-9"	8'-3"	9'-0"	6"
78	3'-0"	7'-6"	1'-9"	9'-3"	9'-6"	6½"
84	3'-0"	7'-6½"	1'-9"	9'-3½"	10'-0"	6½"
90	3'-5"	7'-3½"	2'-0"	9'-3½"	11'-0"	6½"

TRAVERSABLE END SECTION							
DIA	B	C	D	E	F	R	S
15"	4'	9"	4'-9"	1'-7½"	2¼"	3"	6
18"	5'-9"	9"	6'-6"	1'-11"	2½"	3"	6
24"	6'	1'	7'	2'-6"	3"	3"	4
30"	7'-6"	1'	8'-6"	3'-1"	3½"	3½"	4
36"	7'-3"	15"	8'-6"	3'-8"	4"	3"	4

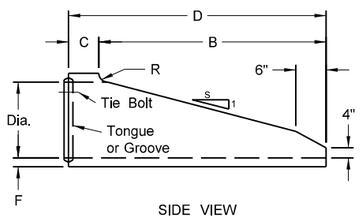

SIDE VIEW

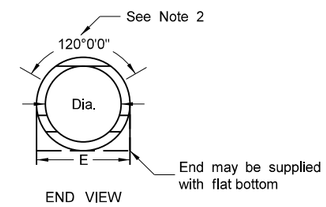

END VIEW

NOTES (Traversable End Section):

1. Manufactured in accordance with applicable portions of ASTM C76/AASHTO M170.
2. Reinforcement per Class III RCP with double reinforcement in the upper 120° of the full barrel portion.

REINFORCED CONCRETE PIPE - TRAVERSABLE END SECTION
Reinforcement to be equivalent to Class III RCP

All Classifications of Round Concrete Pipe					
Internal Dia.of pipe in Inches	Cross-Sectional Water Area	Weight per lin. foot of Pipe Std. Wall	Joint J Groove End Min./Max.	Joint K Tongue End Min.	Minimum Wall Thickness (T)
Dia	Sq. ft.	Lbs.	In.	In.	In.
12	0.79	92	1⅝-2⅜	¾	2
15	1.23	127	1¾-2¾	⅞	2¼
18	1.77	168	1⅞-2⅞	1	2½
21	2.40	214	1⅞-3⅛	1⅛	2¾
24	3.14	265	2⅛-3¼	1⅛	3
27	3.98	322	2⅜-4	1¼	3¼
30	4.91	384	3⅛-4¼	1¼	3½
33	5.94	452	3⅛-4¼	1½	3¾
36	7.07	524	3⅛-4¼	1½	4
42	9.62	685	3⅜-4¾	1¾	4½
48	12.57	685	3⅝-4¾	1⅞	5
54	15.90	1070	4⅛-5½	2	5½
60	19.63	1296	4½-5½	2¼	6
66	23.76	1542	5-6	2⅝	6½
72	28.27	1810	5⅝-6¾	2⅞	7
78	33.18	2098	6¼-7¼	2⅞	7½
84	38.48	2410	5⅝-7¾	3⅜	8
90	44.18	2793	6¾-8½	3⅛	8½
96	50.27	3092	7-8¾	3½	9
102	56.75	3466	7-8¾	3½	9½
108	63.62	3864	7¼-8½	3¾	10

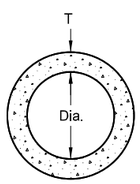

END VIEW

CIRCULAR PIPE

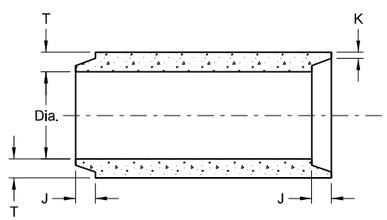

TONGUE & GROOVE JOINT

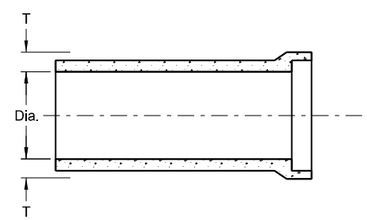

BELL & SPIGOT JOINT

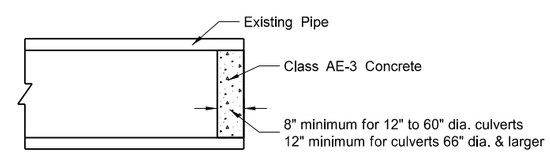

CONCRETE PIPE PLUG

JOINTS FOR REINFORCED CONCRETE PIPE

SEE STANDARD DRAWING D-714-22 FOR DETAILS OF CONCRETE PIPE TIES (TIE BOLTS).

NOTES:
1. All reinforcing steel shall meet AASHTO M170 requirements.
2. All circular, longitudinal, and elliptical reinforcement shall be assembled and securely fastened in cage fashion so as to maintain reinforcement in exact shape and correct positions within the forms.
3. Laying length of pipe: 12" to 66" (incl.) = not less than 4 feet
   66" to 108" (incl.) = not less than 6 feet
4. Joints shall be sealed with rubber gaskets or with sealer approved by the engineer whenever pipe are specified for storm drain or sanitary sewers.
5. For Class IV and Class V reinforced concrete pipe and end sections, shop drawings and design calculations shall be sealed by a Professional Engineer and submitted for Engineer's review.

NORTH DAKOTA DEPARTMENT OF TRANSPORTATION	
05-12-14	
REVISIONS	
DATE	CHANGE

This document was originally issued and sealed by Terrence R. Udland, Registration Number PE- 2674, on 05/12/14 and the original document is stored at the North Dakota Department of Transportation

ROUND CORRUGATED STEEL PIPE CULVERTS AND END SECTIONS

D-714-4

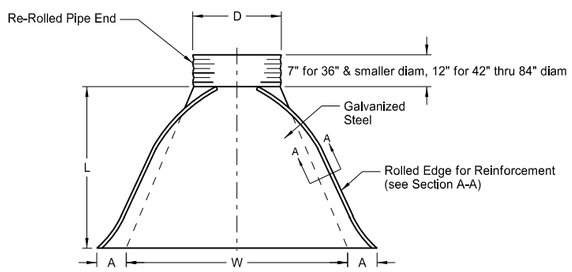

PLAN VIEW

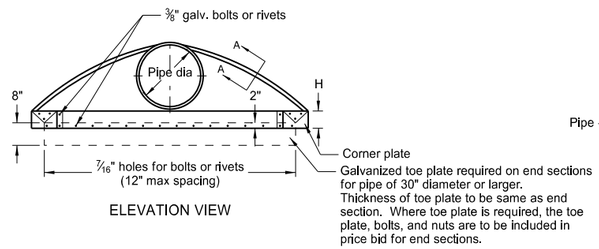

ELEVATION VIEW

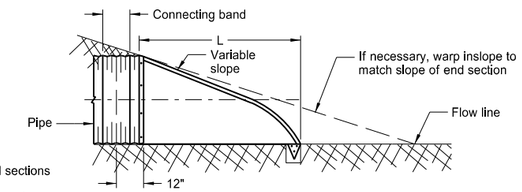

TYPICAL CROSS SECTION
(showing connector section)

* * PIPE DIA.	GALV. THICK.	END SECTION DIMENSIONS					APPROX. SLOPE	BODY
		A	B	H	L	W		
IN	IN	IN	IN	IN	IN	IN	RATE	PIECE
15	0.064	7	8	6	26	30	2½:1	1
18	0.064	8	10	6	31	36	2½:1	1
24	0.064	10	13	6	41	48	2½:1	1
30	0.079	12	16	8	51	60	2½:1	1 or 2
36	0.079	14	19	9	60	72	2½:1	2
42	0.109	16	22	11	69	84	2½:1	2
48	0.109	18	27	12	78	90	2½:1	2
54	0.109	18	30	12	84	102	2:1	2
* 60	0.109	18	33	12	87	114	1¾:1	3
* 66	0.109	18	36	12	87	120	1½:1	3
* 72	0.109	18	39	12	87	126	1 1/3 :1	3
* 78	0.109	18	42	12	87	132	1¼:1	3
* 84	0.109	18	45	12	87	138	1 1/6 :1	3

* These sizes have 0.109" sides and 0.138" center panels.

* * Pipe diameter is equal to dimension "D" of end section.

Manufacturers tolerances of above dimensions will be allowed.

Splices to be the lap riveted type.

Multiple panel bodies shall have lap seams which are to be tightly joined with ⅜" dia. galv. bolts or rivets. Nuts to be torqued to 25 foot-lbs ±.

SECTION A-A

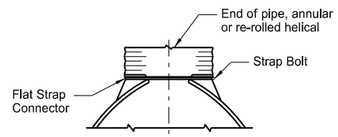

TYPE #1
For circular pipes with diameter 24" & smaller

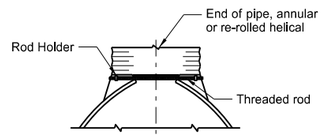

TYPE #2
For circular pipes with diameter 30" through 36"

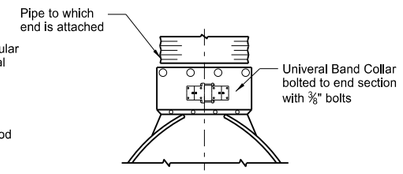

TYPE #3
For all pipe sizes

COUPLING BAND DIMENSIONS				
COUPLING TYPE	CORRUGATION PITCH x DEPTH	PIPE SIZE	COUPLING BAND LENGTH	MIN. BAND THICKNESS
Hat Band	2⅔" x ½"	12" - 48"	2¾"	.064"
Annular Band	2⅔" x ½"	12" - 72"	12"	.052"
		78" - 84"	12"	.079"
	3" x 1"	48" - 120"	14"	.052"
Hugger Band	2⅔" x ½" Rerolled End	12" - 72"	10½"	.052"
		78" - 84"	10½"	.079"
	3" x 1" Rerolled End	48" - 120"	10½"	.052"
	5" x 1" Rerolled End	48" - 120"	12"	.064"

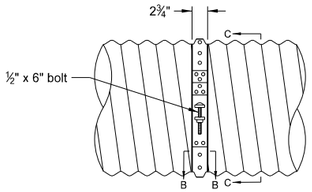

SIDE VIEW

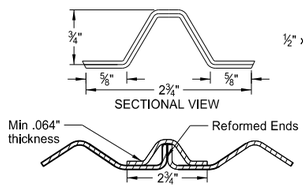

SECTIONAL VIEW

SECTION B-B

HAT BAND FOR FLANGED END PIPE

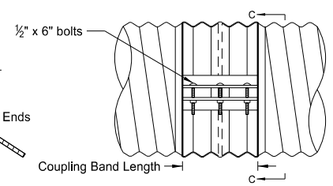

SIDE VIEW

ANNULAR BAND

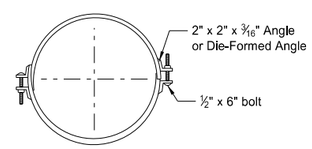

SECTION C-C
Angle Connection

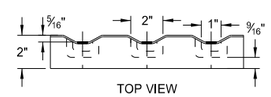

TOP VIEW

Die-Formed Angle Connector

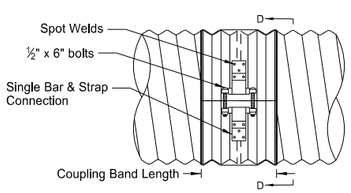

SIDE VIEW

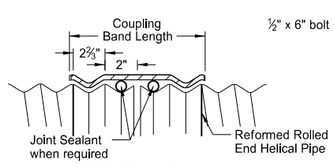

SECTIONAL VIEW

HUGGER COUPLING BAND

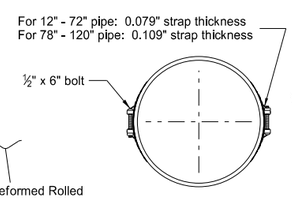

SECTION D-D
Bar & Strap Connection

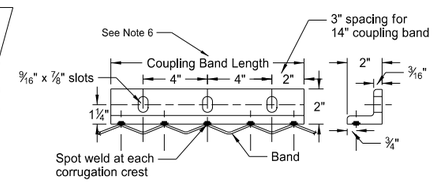

SIDE VIEW
END VIEW

2" x 2" x 3/16" Angle Connector

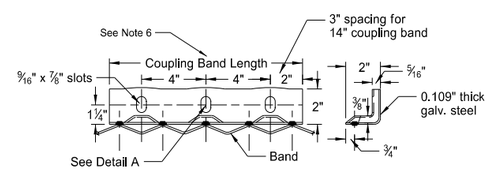

SIDE VIEW
END VIEW

Die-Formed Angle Connector

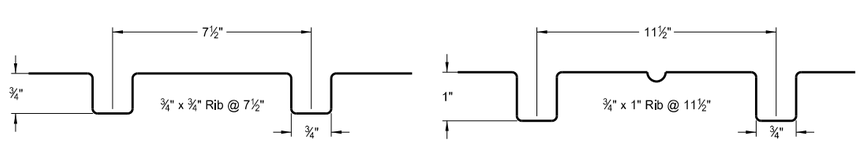

SPIRAL RIB CORRUGATIONS

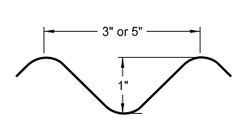

3" x 1" CORRUGATIONS or
5" x 1" CORRUGATIONS

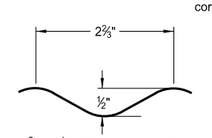

2⅔" x ½" CORRUGATIONS

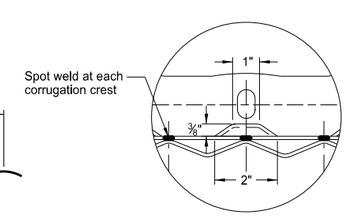

Detail A

NOTES:

1. Pipes and connecting bands shall conform to applicable sections of NDDOT Standard Specifications and to AASHTO M-36.
2. Top edge of all end sections to have rolled edges for reinforcement (see Section A-A). The reinforced edges are to be supplemented with 2" x 2" x ¼" galv. angle for 60" through 72" dia. and 2½" x 2½" x ¼" galv. angle for 78" and 84" dia.. Angles to be attached by galv. ⅜" dia. bolts and nuts. Angles are to extend from pipe to the corner wing bend.
3. Elongated pipes shall be factory preformed so that the vertical diameter shall be 5% greater and the horizontal diameter 5% less than a circular pipe.
4. Coupling bands shall be two-piece for pipes larger than 36" as shown in Section C-C & D-D details. For pipes 36" and smaller, a one-piece band is acceptable.
5. ½" x 8" bolts may be used as a substitute for the ½" x 6" bolts shown in the details.
6. Coupling bands wider than 14" may be used if a minimum of four ½" bolts with maximum spacing of 5½" are used for the connection.
7. Length of spot welds shall be minimum ½".

NORTH DAKOTA
DEPARTMENT OF TRANSPORTATION

08-06-13

REVISIONS

DATE	CHANGE
01-07-14	End Section Plan View
02-27-14	3" x 1" Corrugation Detail

This document was originally issued and sealed by Terrence R. Udland, Registration Number PE- 2674 , on 02/27/2014 and the original document is stored at the North Dakota Department of Transportation

D-714-16

JACKED AND BORED PIPE

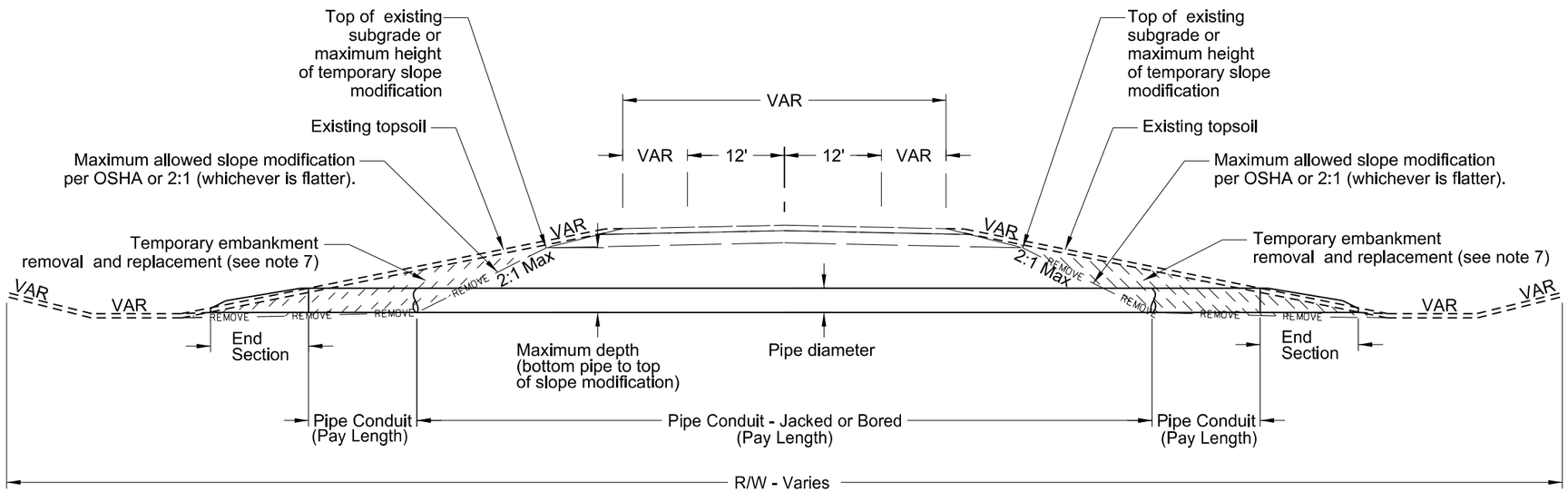

JACKED AND BORED PAY LENGTH

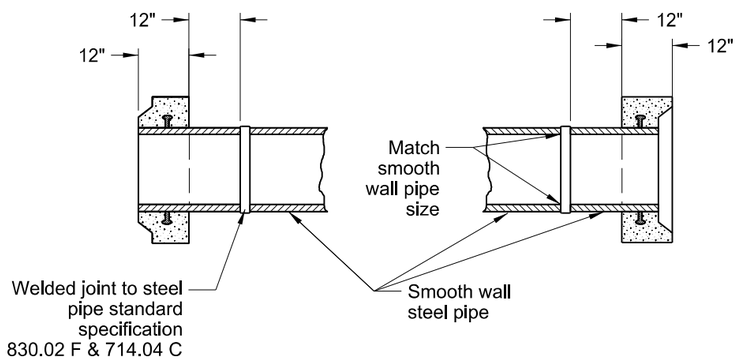

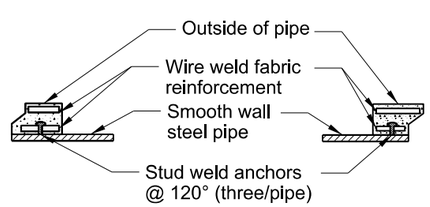

STANDARD COUPLER FOR JOINING SMOOTH WALL STEEL PIPE TO REINFORCED CONCRETE PIPE

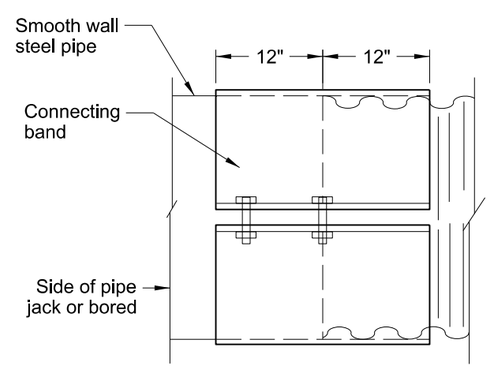

STANDARD CONNECTING BAND FOR JOINING SMOOTH WALL STEEL PIPE TO CORRUGATED PIPE

Table of Minimum Wall Thicknesses for Smooth Walled Steel Pipe Through Roadway Embankment	
Diameter of Pipe	Minimum Wall Thickness
24 Inches	0.312 Inch
30 Inches	0.406 Inch
36 Inches	0.469 Inch
42 Inches	0.500 Inch
48 Inches	0.563 Inch
54 Inches	0.656 Inch
60 Inches	0.719 Inch
66 Inches	0.813 Inch
72 Inches	0.875 Inch

NOTES:

1. The method used to install the pipe indicated as jacked on the plans shall be left to the discretion of the contractor. The boring or jacked methods are acceptable. If the boring method is used, the contractor may use smooth wall steel pipe in lieu of RCP. Jacked concrete pipe sections shall be the class required for the height of fill, but concrete compressive strength shall be a minimum of 6,000 psi or greater. If smooth walled steel pipe is to be used, this material shall be welded steel pipe of new material, meeting ASTM Specifications A-139, Grade B with minimum yield strength of 35,000 psi . The Table of Minimum Wall Thicknesses for Smooth Walled Steel Pipe Through Roadway Embankment shall be used.

2. Pipe culverts that are bored or jacked shall conform to section 714 and section 830 of the standard specifications.

3. Pipe culverts shall be installed using equipment that encases the hole as the earth is removed. Boring or jacking without the concurrent installation of the pipe will not be permitted.

4. Pipe shall extend through the undisturbed fill and shall be installed so as not to disrupt traffic nor damage roadway grade and surface. Contractor shall ensure proper traffic control and traffic safety measures are put into place to protect the traveling public throughout the jacking or boring process.

5. The encased hole shall not be more than 0.1 foot greater than the outside diameter of the pipe.

6. Use of water in the process of boring or jacking is prohibited.

7. Temporary removal and replacement of embankment shall be included in price bid for Pipe Conduit – Jacked or Bored. Temporary removal of embankment may be allowed up to a maximum of 2:1, and shall not be into the existing pavement section (base, pavement, etc). Contractor is responsible for protection and stability of the slope throughout the jacking or boring process.

8. Proper cushioning material shall be inserted between the jack and pipe. Damaged ends that result in an unsatisfactory joint when the additional sections of pipe are placed, shall be rejected and removed, and a new section shall be installed.

9. The boring or jacking shall start from the low or downstream end, be made in straight lines, to the grade and alignment as shown on the plans. The flow line elevation at the starting point for boring or jacking shall be within 0.1 ft. of staked grade; the flow line shall not be reversed at any point; and the line and grade at any point within the pipe shall not vary by more than 0.5 ft. from the line and grade designated.

10. Openings more than 1/4 inch (5 mm) in width between adjacent sections of concrete pipe shall be filled with 1:2 cement/sand mortar. All concrete pipe sections and end sections shall be tied in accordance with standard drawing D-714-22. All steel sections shall be welded continuously around their periphery in accordance with Standard Specification 830.02 F & 714.04 C.

11. Once the pipe jacking has begun, proceed with the operation without interruption to prevent the pipe from becoming firmly set in the embankment.

12. The culvert consists of separate bid items for each portion: "Pipe Conduit XXIn – Jacked or Bored" and "Pipe Conduit XXIn". The pay lengths of the pipe bid items are as shown for the type and size specified per linear foot. Connecting bands or Couplers shall be included in the unit price bid for "Pipe Conduit XXIn – Jacked or Bored". The required materials, labor, and equipment to complete the work shall be included in the price bid for the above bid items.

Note: This Standard Drawing only applies to jacked and bored pipe under a roadway embankment. Additional coordination and design is needed for railroad embankments.

NORTH DAKOTA DEPARTMENT OF TRANSPORTATION	
02-28-2014	
REVISIONS	
DATE	CHANGE
07-07-2014	Revise Notes

This document was originally issued and sealed by Roger Weigel Registration Number PE-2930, on 7/7/14 and the original document is stored at the North Dakota Department of Transportation

CONCRETE PIPE OR PRECAST CONCRETE BOX CULVERT TIES

D-714-22

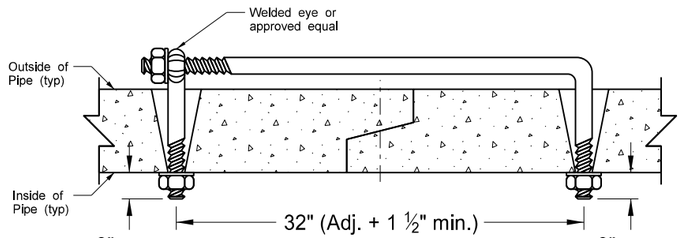

EYE BOLT TIE (PIPES ONLY)

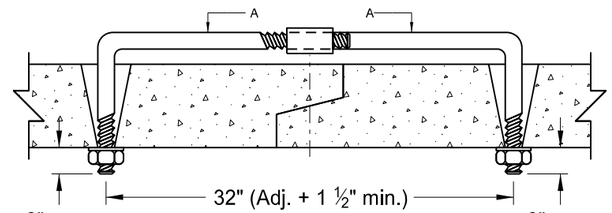

ADJUSTABLE TIE (PIPES ONLY)

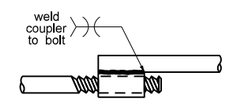

SECTION A-A

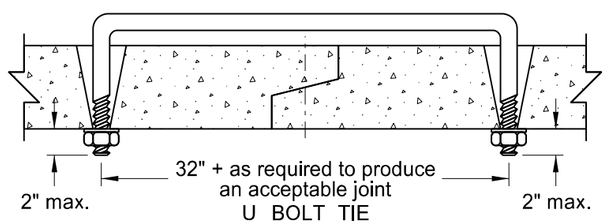

U BOLT TIE

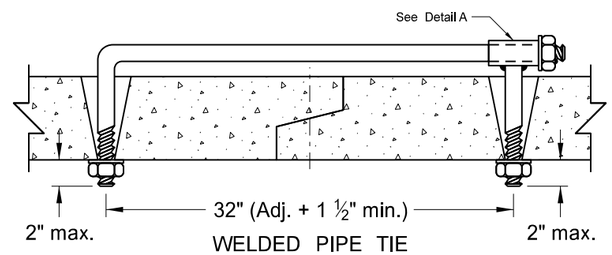

WELDED PIPE TIE

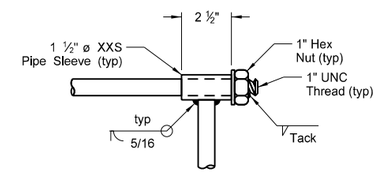

DETAIL A

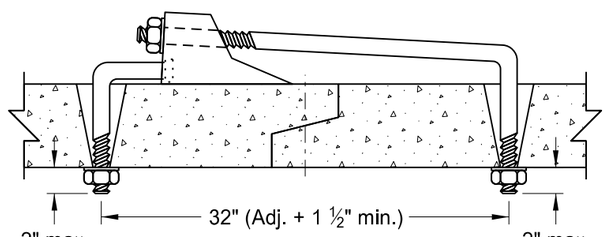

CANOPY TIE (PIPES ONLY)

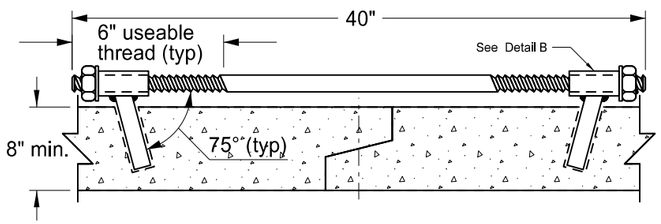

HIDDEN TIE (RCB ONLY)

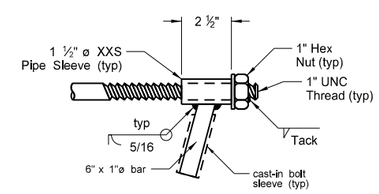

DETAIL B

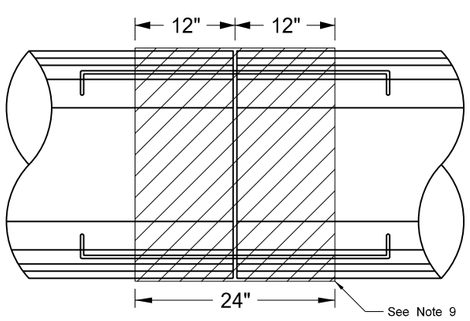

PLAN VIEW

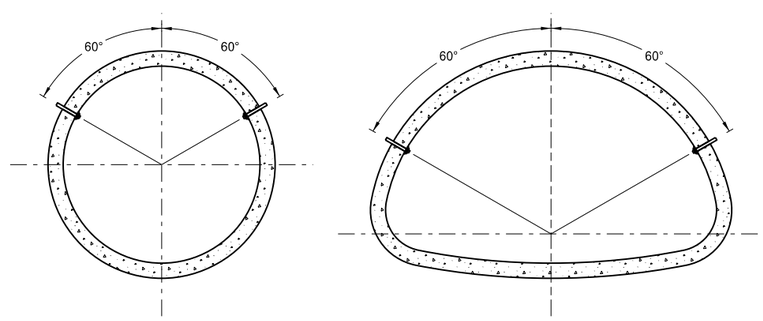

END VIEW

REQUIRED SIZE OF TIE BOLTS		
Pipe Size	Thread ø	XXS Pipe Sleeve Inner ø
18" - 24"	⅝" See note 2	¾"
30" - 66"	¾"	1"
72" - 78"	1"	1 ¼"
RCB		

NOTES:

1. The pipe size listed is the inside diameter of round pipe or the equivalent diameter of pipe arch.
2. Nuts and washers are not required on Jacked and Bored pipes or pipes with a 24" diameter or less. Where nuts and washers are not used, the tie bars shall be inserted and grouted into place.
3. Ties are only for holding pipe or RCB sections together, not for pulling sections tight.
4. Tie bolt assembly shall be hot dip galvanized in accordance with AASHTO M232.
5. Holes in pipes to accommodate tie bolts can be precast or drilled. Tapered holes are permitted when precast. Holes shall have a diameter ¼" larger than the diameter of the thread. Holes in precast RCB's shall contain cast-in bolt sleeves with an inside diameter of 1 ¼".
6. The contractor has the option of selecting the type of tie bolt used from those shown.
7. The cost of precasting or drilling the required holes and furnishing and installing the tie bolts shall be included in the price bid for the appropriate conduit or RCB pay item.
8. All concrete culvert and storm sewer joints, including the end section joints, shall be tied unless otherwise specified.
9. When joint wrap is specified in the plans, place wrap beneath ties. Overlap the joint by 12" in both directions.
10. Tie bolts shall conform to ASTM A 36. Nuts shall be heavy hex and conform to ASTM A 563. Washers shall conform to ASTM F 436, Type 1. Welded pipe sleeves and cast-in bolt sleeves shall conform to ASTM A 53, Grade B.
11. Cattle Pass and Jacked and Bored pipes shall have pipe ties inserted from the inside of the pipes and grouted into place. Jacked and bored pipes with a diameter of 24" or less do not require pipe ties.
12. RCB tie locations shall be as shown on the plans.

NORTH DAKOTA DEPARTMENT OF TRANSPORTATION	
3-18-14	
REVISIONS	
DATE	CHANGE

This document was originally issued and sealed by Terrence R. Udland, Registration Number PE-2674, on 3/18/2014 and the original document is stored at the North Dakota Department of Transportation

PIPE EXCAVATION AND INSTALLATION DETAIL FOR LONGITUDINAL MAINLINE PIPE OR PIPE NOT UNDER THE ROADWAY

D-714-27

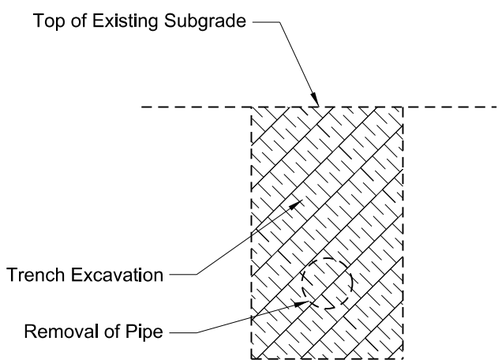

EXCAVATION DETAIL A

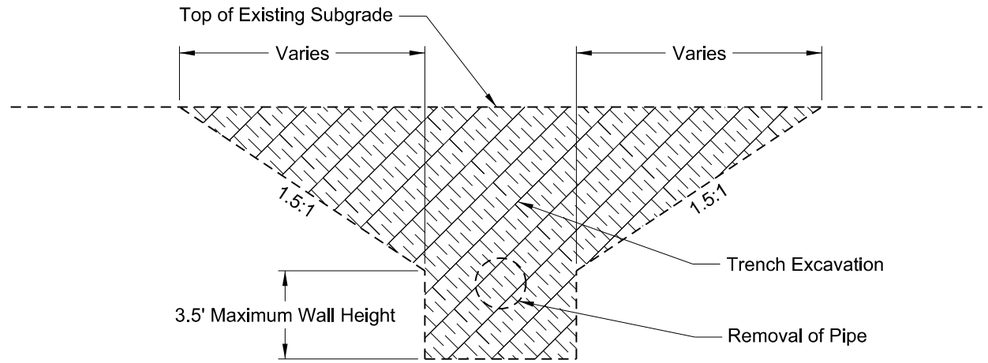

EXCAVATION DETAIL B

Pay Items
1) Pipe*
2) Removal of Pipe (if required)

*Included in Pipe Pay Item
1) Pipe
2) Trench excavation
3) Aggregate base course Cl 3 or Cl 5
4) Common Excavation - Type A
5) Common Excavation - Type B

NOTES:
1) This drawing does not apply to pipes in approaches.

2) It is the contactor's option to select Detail A or B.

Bedding and Haunch (A)
Pipes Not Under Roadway = 0.5 O.D. + 4 Inches
Pipes Under the Roadway = 0.5 O.D. + 2 Feet

Backfill Cover (B)
Concete Pipe = 0.5 O.D.
Metal Pipe = 0.5 O.D. + 1 Foot
PVC/HDPE = 0.5 O.D. + 1 Foot

Backfill Material (C)
Top of Pipe 4 Feet or Less Below the Top of Proposed Subgrade = Aggregate Base Course Cl 3 or Cl 5
Top of Pipe Greater than 4 Feet Below the Top of Proposed Subgrade = Common Excavation - Type A
Pipe Not Under Roadway = Common Excavation - Type B

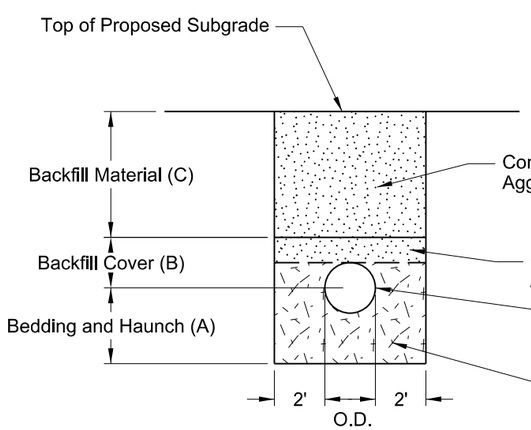

BACKFILL DETAIL A

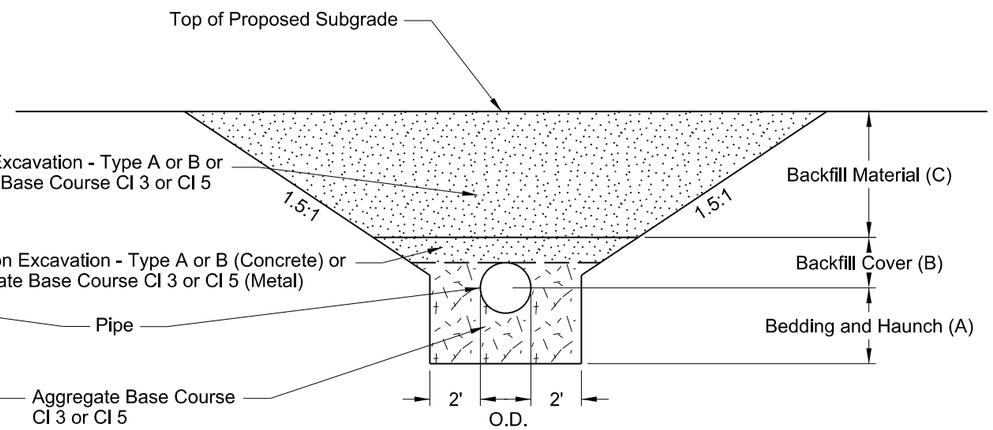

BACKFILL DETAIL B

NORTH DAKOTA DEPARTMENT OF TRANSPORTATION	
7-26-13	
REVISIONS	
DATE	CHANGE
10-15-13	Label Formatting

This document was originally issued and sealed by Ron Horner, Registration Number PE- 2087, on 10/15/13 and the original document is stored at the North Dakota Department of Transportation

MANHOLE DETAILS

D-722-5

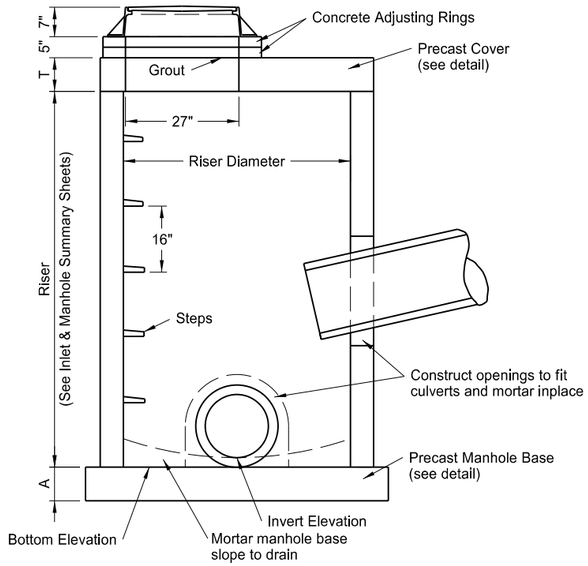

ELEVATION

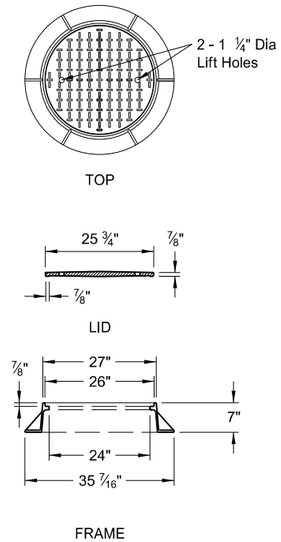

MANHOLE CAST IRON RING & COVER

PRECAST MANHOLE COVERS

RISER DIAMETER	COVER DIAMETER	WEIGHT OF SECTION	T	K	L	BOTTOM * BARS	TOP * BARS
48"	58"	1,080 Lb	6"	6"	8"	#4 at 6"	—
54"	65"	1,910 Lb	8"	6"	8"	#4 at 6"	—
60"	72"	2,430 Lb	8"	7"	9"	#4 at 6"	#4 at 11"
66"	79"	3,010 Lb	8"	7"	9"	#4 at 6"	#4 at 11"
72"	86"	3,640 Lb	8"	8"	10"	#4 at 6"	#4 at 11"
84"	100"	5,060 Lb	8"	9"	11"	#5 at 6"	#5 at 11"
96"	114"	6,695 Lb	8"	9"	11"	#5 at 6"	#5 at 11"
108"	128"	12,810 Lb	12"	10"	12"	#5 at 6"	#5 at 11"
120"	142"	15,900 Lb	12"	11"	13"	#5 at 6"	#5 at 11"

* - Reinforcement listed shall be placed in each direction.

MANHOLE BASES

RISER DIAMETER	BASE DIAMETER	WEIGHT OF SECTION	A	BARS *
48"	66"	1,785 Lb	6"	#4 at 12"
54"	72"	2,830 Lb	8"	#4 at 12"
60"	78"	3,320 Lb	8"	#4 at 12"
66"	86"	4,035 Lb	8"	#4 at 12"
72"	92"	4,620 Lb	8"	#4 at 12"
84"	107"	6,245 Lb	8"	#4 at 12"
96"	120"	7,855 Lb	8"	#4 at 12"
108"	132"	14,255 Lb	12"	#4 at 8"
120"	148"	17,925 Lb	12"	#4 at 8"

* - Reinforcement listed shall be placed in each direction.

NOTES:

1. The contractor shall have the option of using precast or cast-in-place bases. Class of concrete shall be AE. The aggregate size shall be approved by the engineer in the field. Construction shall be in accordance with the NDDOT Standard Specifications.
2. Precast concrete manholes, risers and steps shall conform to AASHTO M199.
3. Precast concrete bases and covers shall be reinforced as shown in the table for the corresponding riser diameter.
4. All reinforcing steel shall be Grade 60 steel.
5. Bottoms of manhole risers shall be cut or precast square to fit the manhole base. Grout joint between base and riser with cement mortar.
6. The manhole riser length listed in the plans has been determined assuming the use of the 7" manhole casting plus 2 concrete adjusting rings (5") plus the "T" dimension shown in the Precast Manhole Covers table.
7. Manhole steps shall be corrosion resistant and shall have a minimum vertical load resistance of 800 pounds and a minimum horizontal pull-out resistance of 400 pounds. Configuration of the steps shall be approved by the Engineer.
8. Precast concrete manhole covers shown are designed for an HS-20 wheel load and a maximum fill height of 15'-0". Special design required for heavier wheel loads and/or greater fill heights.
9. Other castings, similar in dimension, may be used if the casting conforms to the manhole cover and has a lid style as specified. If modifications to the manhole cover are required to facilitate similar castings the contractor must receive written approval from the engineer.
10. Castings shall be manufactured in accordance with AASHTO M306-09. Metal used in the manufacture of castings shall conform to AASHTO M105 Class 35B.

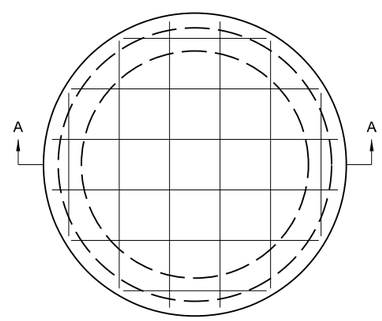

TOP VIEW

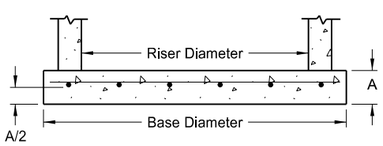

SECTION A-A

PRECAST MANHOLE BASE

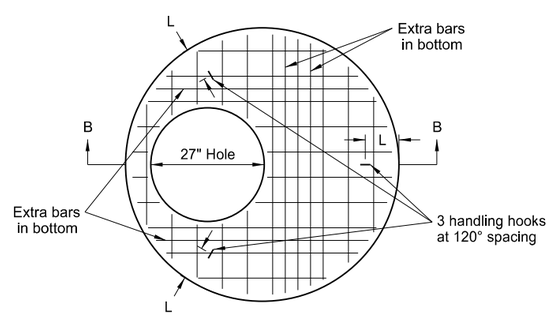

TOP VIEW

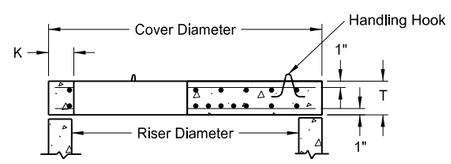

SECTION B-B

PRECAST COVER

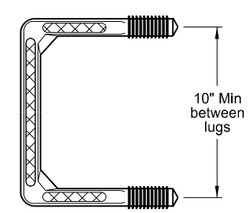

TOP VIEW

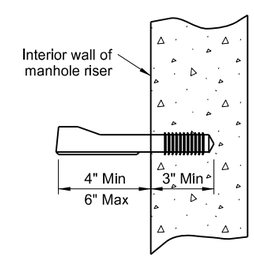

STEP DETAIL

NORTH DAKOTA DEPARTMENT OF TRANSPORTATION	
05-14-2013	
REVISIONS	
DATE	CHANGE
6-24-14	Revised notes 1 & 6, added dimensions to Elev. drawing

This document was originally issued and sealed by Roger Weigel, Registration Number PE- 2930, on 6-24-14 and the original document is stored at the North Dakota Department of Transportation

PERFORATED TUBE ASSEMBLY DETAILS

D-754-23

Notes:

1. Curbed Roadways: The clearance from the face of the curb should be 3' except where right of way or sidewalk width is limited, a minimum clearance of 2' shall be provided. The horizontal clearance may need to be increased to maintain a minimum sidewalk clear width of 4' from the sign support, not including any attached curb.

2. Minimum vertical clearance: Signs installed at the side of the road in rural districts shall be at least 5' measured from the bottom of the sign to the edge of the driving lane or auxiliary lane. Where parking or pedestrian movements occur, the clearance to the bottom of the sign shall be at least 7'.

   Signs on expressways shall be installed with a minimum height of 7'.

   Adopt-a-highway signs installed on Freeways shall be at least 7' above the edge of the driving lane.

   The vertical clearance shall have a maximum height of 6" above the vertical clearance specified above.

3. Offset signs: Where signs are placed at least 30 feet or more from the edge of the traveled way, the height to the bottom of such sign shall be 5' above the edge of the driving lane.

4. The clearance from edge of shared use path to edge of sign should be 3' except where width is limited, a minimum clearance of 2' shall be provided.

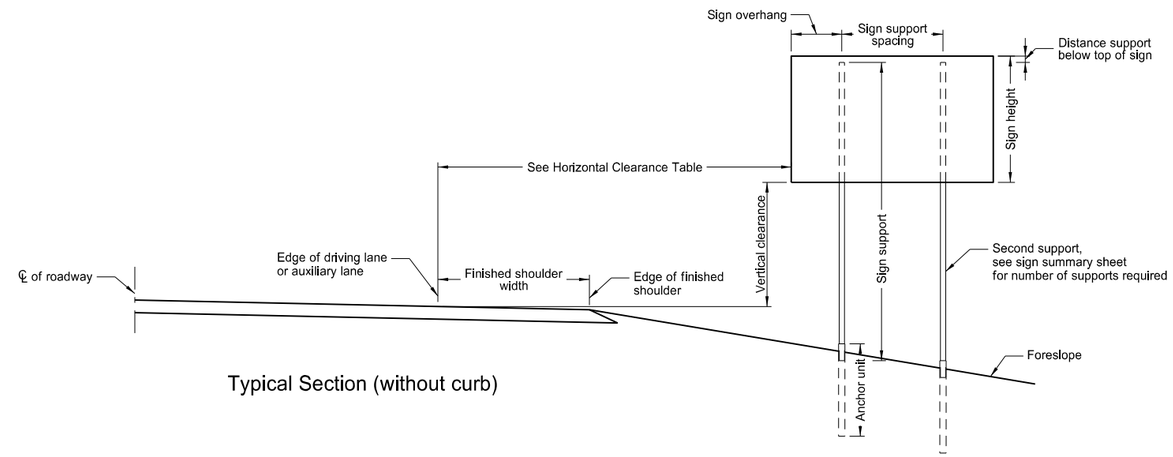

Typical Section (without curb)

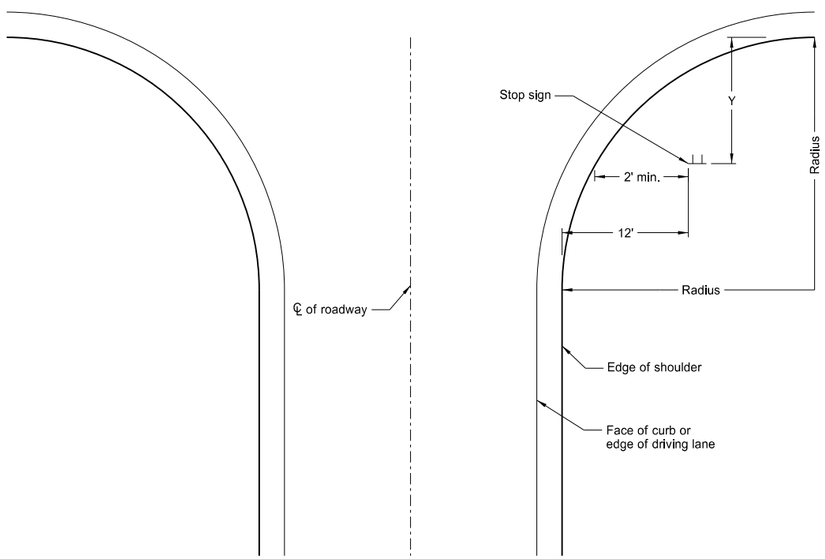

Stop Sign Location
Wide Throat Intersection

This layout is to be used for the placement of "Stop" signs.

Radius ft.	Y-max. ft.	Y-min. ft.
40	50	15
45	50	18
50	50	21
55	50	25
60	50	28
65	50	32
70	50	35
75	50	39
80	50	43

Horizontal Clearance Table	
Shoulder Width ft	Offset ft
0 to 2	16
>2 to 4	18
>4 to 6	20
>6 to 8	22
>8 to 10	24

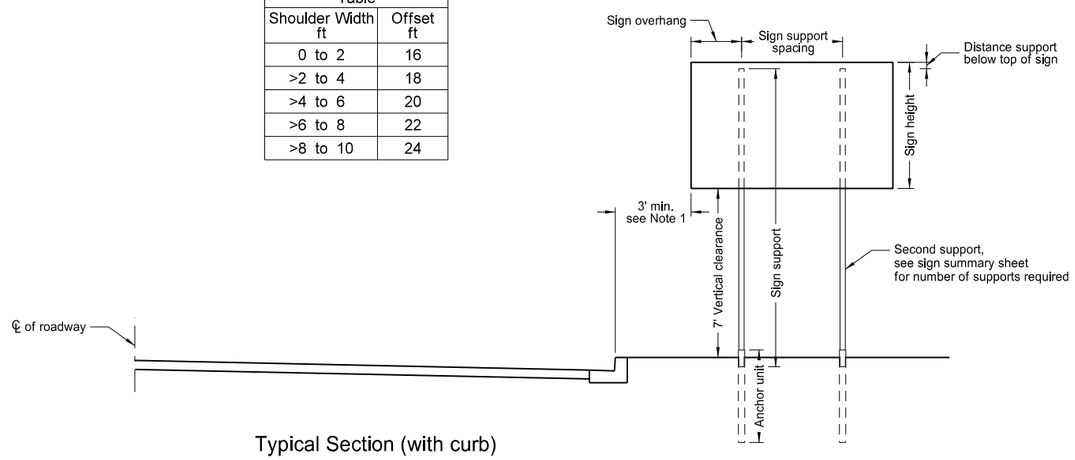

Typical Section (with curb)

Residential or Business District

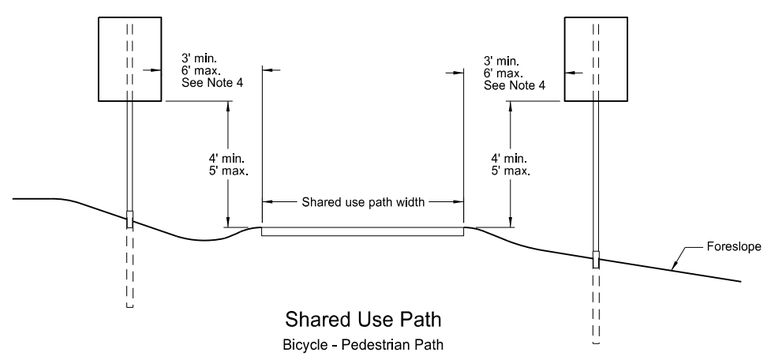

Shared Use Path

Bicycle - Pedestrian Path

NORTH DAKOTA DEPARTMENT OF TRANSPORTATION	
10-3-13	
REVISIONS	
DATE	CHANGE
7-8-14	Revised note 2, added note 4.

This document was originally issued and sealed by Roger Weigel Registration Number PE- 2930, on 7/8/14 and the original document is stored at the North Dakota Department of Transportation

Mounting Details Perforated Tube

D-754-24

Number of Posts	Telescoping Perforated Tube						
	Post Size In.	Wall Thick-ness Gauge	Sleeve Size In.	Wall Thick-ness Gauge	Slip Base	Anchor Size Without Slip Base In.	Anchor Wall Thick-ness Gauge
1	2	12			No	2¼	12
1	2¼	12			No	2½	12
1	2½	12			(B)	3(C)	7
1	2½	10			Yes		7
1	2¼	12	2½(D)	12	Yes		7
1	2½	12	2¼	12	Yes		7
2	2½	10			Yes		7
2	2¼	12	2½(D)	12	Yes		7
2	2½	12	2¼	12	Yes		7
3 & 4	2½	12			Yes		7
3 & 4	2½	10			Yes		7
3 & 4	2½	12	2¼	12	Yes		7
3 & 4	2¼	12	2½(D)	12	Yes		7
3 & 4	2½	10	2 3/16	10	Yes		7

(B) - The 2½", 12 gauge posts do not need breakaway bases when placed in standard soils, but require a shim as specified by the manufacturer. The breakaway base is required when the support is placed in weak soils. The Engineer shall determine if the soils are weak. Weak soils are classified as boggy, wet, or loose soil areas.
(C) - 3" anchor unit
(D) - 2½" x 12 ga. x 18" minimum length external sleeve required.

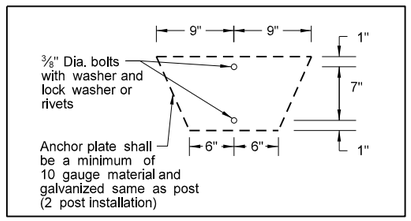

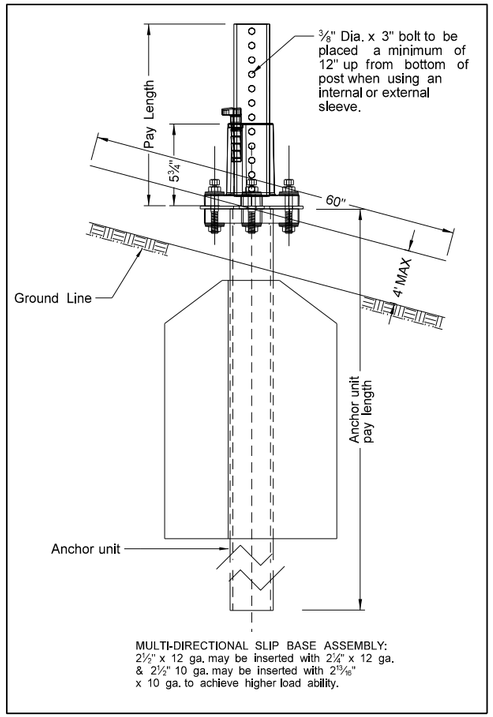

MULTI-DIRECTIONAL SLIP BASE ASSEMBLY:
2½" x 12 ga. may be inserted with 2¼" x 12 ga. & 2½" 10 ga. may be inserted with 2 15/16" x 10 ga. to achieve higher load ability.

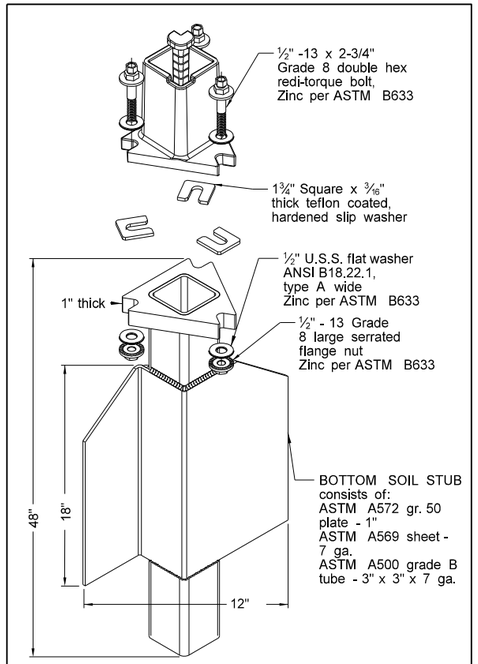

SLIP BASE FOR 2½" POST

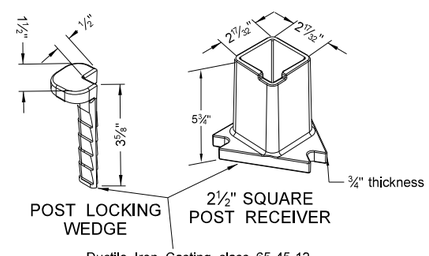

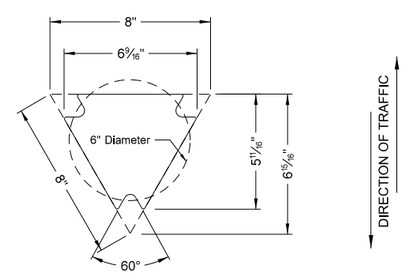

SLIP BASE DETAIL

Properties of Telescoping Perforated Tubes						
Tube Size In.	Wall Thickness in.	U.S. Standard Gauge	Weight Per Foot Lbs.	Moment of Inertia In.⁴	Cross Sect. Area In.²	Section Modulud In.³
1½ x 1½	0.105	12	1.702	0.129	0.380	0.172
2 x 2	0.105	12	2.416	0.372	0.590	0.372
2¼ x 2¼	0.105	12	2.773	0.561	0.695	0.499
2⅜ x 2⅜	0.135	10	3.432	0.605	0.841	0.590
2½ x 2½	0.105	12	3.141	0.804	0.803	0.643
2½ x 2½	0.135	10	4.006	0.979	1.010	0.783

The 2 3/16" size 10 gauge is shown as 2.19" size on the plans; The 2½" size is shown as 2.51" size on the plans.

NOTE:

1. 4" Vertical clearance of anchor or breakaway base. The 4" x 60" measurement shall be made above and below post location and also back and ahead of post.
2. Anchor material shall be 7 guage H.R.P.O. Commmercial quality ASTM A569 and 3" x 3" x 7" guage ASTM A500 grade B. Anchor shall have a yield strength 43.9 KSI and tensile strength of 59.3 KSI. Anchor shall be hot dipped galvanized per ASTM A123/153. All tolerances on anchor unit and slip base bottom assembly are +/- 0.005" unless ortherwise noted.
3. When used in concrete sidewalk, anchor shall be the same concept without the wings
4. Four post signs shall have over 8' between the first and fourth posts.
5. Installation procedures as per manufacturers recommendation.
6. Concrete fasteners for surface mount breakaway base shall be a minimum ½" diameter x 4" grade 8.

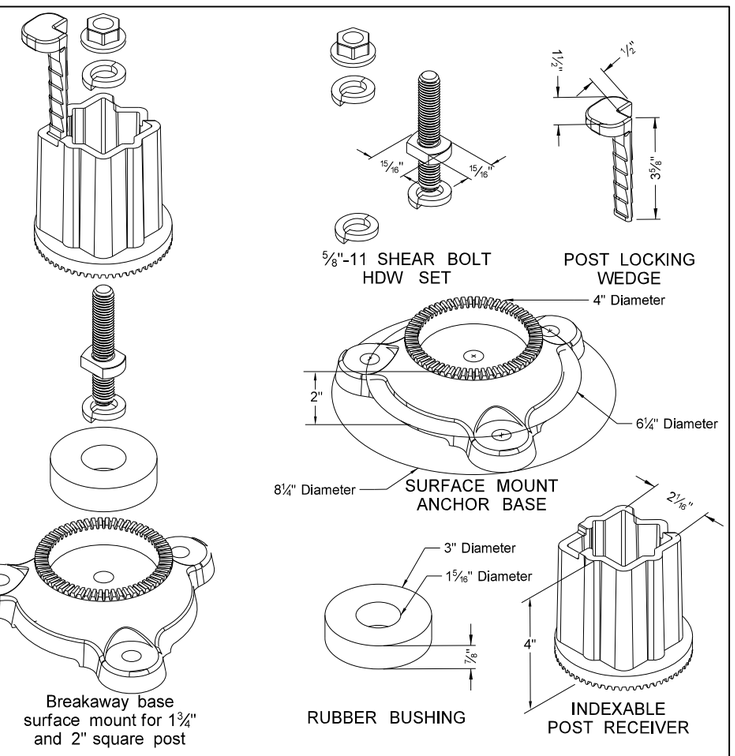

SURFACE MOUNT ANCHOR BASE

SHOULDER BOLT

Shimming agent to reduce tolerance between 3" anchor unit and 2½" post.
(standard ⅜" diameter grade 8 bolt may be used with proper shim)

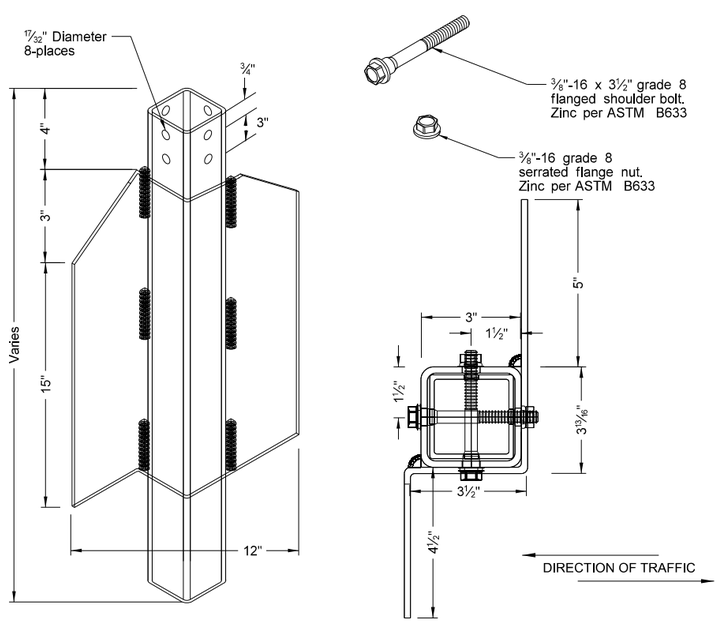

3" ANCHOR UNIT

NORTH DAKOTA DEPARTMENT OF TRANSPORTATION	
8-6-09	
REVISIONS	
DATE	CHANGE

This document was originally issued and sealed by Roger Weigel, Registration Number PE- 2930, on 08/06/09 and the original document is stored at the North Dakota Department of Transportation

D-754-24A

Breakaway Coupler System for Perforated Tubes

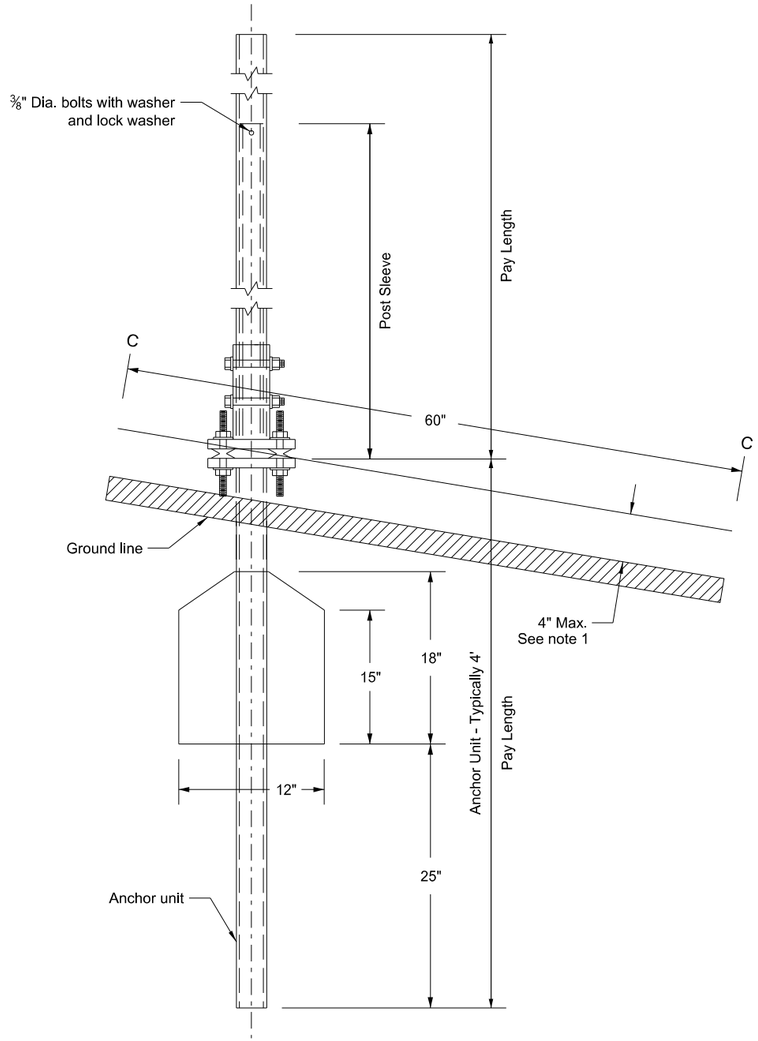

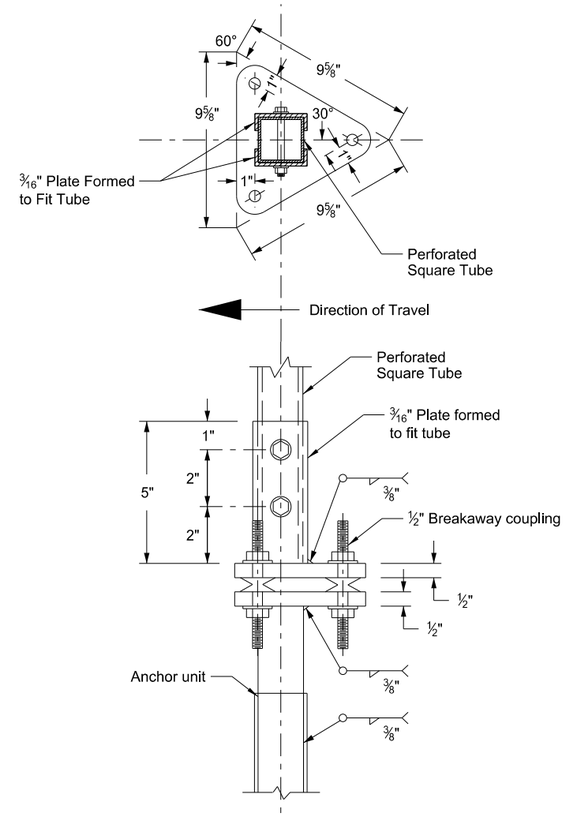

Base Plate with Breakaway Coupler

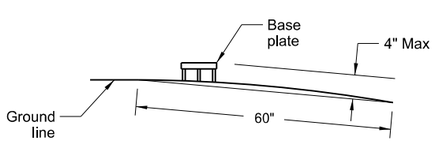

Section C-C

Max. protection of the stub post is 4" above a 60" chord aligned radially to the center line of the highway and connecting any point, within the length of the chord, on the ground surface on one side of the support to a point in the ground surface on the other side.

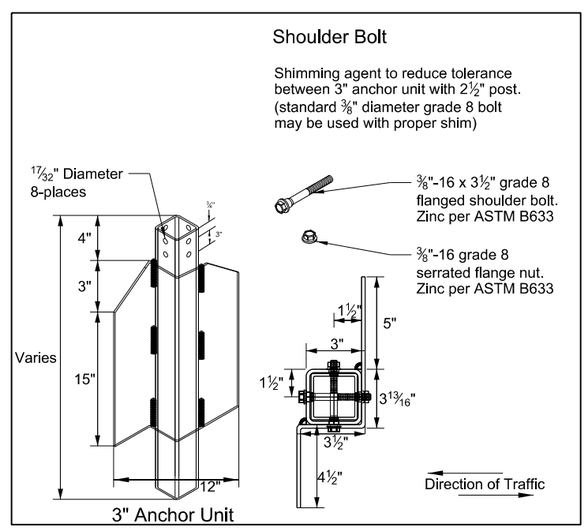

3" Anchor Unit

Notes:

1. 4" Vertical clearance of anchor or breakaway base. The 4" x 60" measurement shall be made above and below post location and also back and ahead of post.
2. Anchor unit shall be the same size as the post and shall have the same specification as the post.
3. Four post signs shall have over 8' between the first and fourth post.
4. In lieu of the breakaway base system on standard D-754-24 the breakaway coupling system may be used. The breakaway coupler system shall be manufactured from material meeting the requirements of ASTM A325 fasteners with the special requirements as specified by DENT BREAKAWAY IND., INC. which meets the test requirements of NCHRP Report 350.

Number of Posts	Telescoping Perforated Tube						
	Post Size In.	Wall Thick-ness Gauge	Sleeve Size In.	Wall Thick-ness Gauge	Slip Base	Anchor Size Without Slip Base In.	Anchor Wall Thickness Guage
1	2	12			No	2¼	12
1	2¼	12			No	2½	12
1	2½	12			(B)	3(C)	7
1	2½	10			Yes		7
1	2¼	12	2	12	Yes		7
1	2½	12	2¼	12	Yes		7
2	2½	10			Yes		7
2	2¼	12	2	12	Yes		7
2	2½	12	2¼	12	Yes		7
3 & 4	2½	12			Yes		7
3 & 4	2½	10			Yes		7
3 & 4	2½	12	2¼	12	Yes		7
3 & 4	2¼	12	2	12	Yes		7
3 & 4	2½	10	2 3/16	10	Yes		7

(B) - The 2½" 12 gauge posts do not need breakaway bases when placed in standard soils. The breakaway base is required when the support is placed in weak soils. The Engineer shall determine if the soils are weak. Weak soils are classified as boggy, wet, or loose soil areas.

(C) - 3" anchor unit

NORTH DAKOTA DEPARTMENT OF TRANSPORTATION	
10-3-2013	
REVISIONS	
DATE	CHANGE

This document was originally issued and sealed by Roger Weigel Registration Number PE- 2930, on 10/3/13 and the original document is stored at the North Dakota Department of Transportation

Mounting Details Perforated Tube

D-754-25

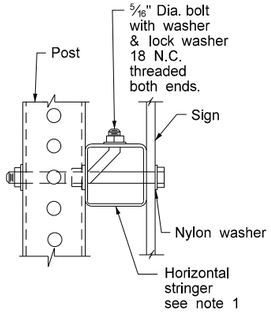

Side View

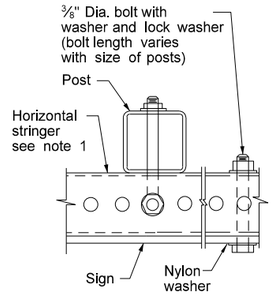

Top View

STRINGER MOUNTING
(WITH STRINGER IN FRONT OF POST)

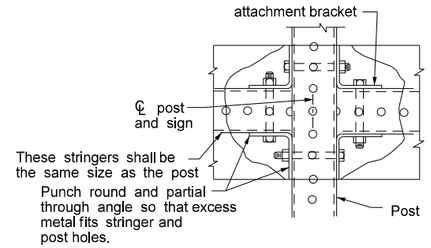

STREET NAME SIGNS
AND ONE WAY SIGNS
SINGLE POST ASSEMBLY
ONE STRINGER OR
BACK TO BACK MOUNTING

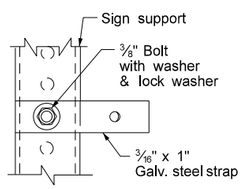

Side View

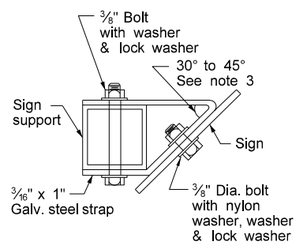

Top View

STRAP DETAIL

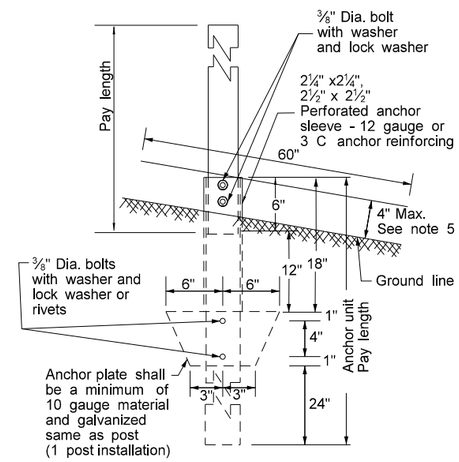

ANCHOR UNIT AND
POST ASSEMBLY

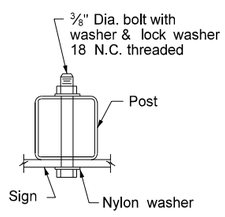

BOLT MOUNTING

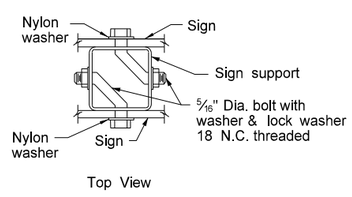

Top View

BACK TO BACK
MOUNTING

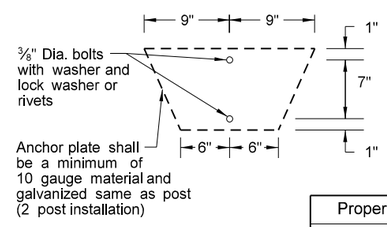

Note:

1. Horizontal stringers - In lieu of perforated tubes, the contractor may substitute z bar stringers. The z bar stringers shall be 1¾" x 3/16" thick, 1.08 lbs./ft aluminum or 3.16 lbs./ft steel.
2. Metal washers used on sign face shall have a minimum outside diameter of 15/16" ± 1/16" and 10 gauge thickness.
3. No Parking Signs: All no parking signs with directional arrows shall be placed at a 30 to 45 degree angle with the line of traffic flow. No parking signs required at the above angles may have the support turned to the correct angle. If the no parking sign is placed with another sign that has to be placed at a 90 degree angle with the line of traffic flow, the detailed angle strap should be used to mount the no parking sign. Flat washers and lock washers shall be used with all nylon washers.
4. In lieu of using the bent bolt to attach the post to the stringer, the contractor may choose to punch the sign backing and place the bolt through the sign, the stringer and the post.
5. 4" vertical clearance of anchor or breakaway base. The 4" x 60" measurement shall be made above and below post location and also back and ahead of post.

Number of Posts	Telescoping Perforated Tube						
	Post Size In.	Wall Thick-ness Gauge	Sleeve Size In.	Wall Thick-ness Gauge	Slip Base	Anchor Size Without Slip Base In.	Anchor Wall Thick-ness Gauge
1	2	12			No	2¼	12
1	2¼	12			No	2½	12
1	2½	12			(B)	3(C)	7
1	2½	10			Yes		7
1	2¼	12	2½(D)	12	Yes		7
1	2½	12	2¼	12	Yes		7
2	2½	10			Yes		7
2	2¼	12	2½(D)	12	Yes		7
2	2½	12	2¼	12	Yes		7
3 & 4	2½	12			Yes		7
3 & 4	2½	10			Yes		7
3 & 4	2½	12	2¼	12	Yes		7
3 & 4	2¼	12	2½(D)	12	Yes		7
3 & 4	2½	10	2 3/16	10	Yes		7

(B) - The 2½", 12 gauge posts do not need breakaway bases when placed in standard soils, but require a shim as specified by the manufacturer. The breakaway base is required when the support is placed in weak soils. The Engineer shall determine if the soils are weak. Weak soils are classified as boggy, wet, or loose soil areas.
(C) - 3" anchor unit
(D) - 2½" x 12 ga. x 18" minimum length external sleeve required.

Properties of Telescoping Perforated Tubes						
Tube Size In.	Wall Thickness In.	U.S. Standard Gauge	Weight Per Foot Lbs.	Moment of Inertia $In.^4$	Cross Sect. area $In.^2$	Section Modulus $In.^3$
1½ x 1½	0.105	12	1.702	0.129	0.380	0.172
2 x 2	0.105	12	2.416	0.372	0.590	0.372
2¼ x 2¼	0.105	12	2.773	0.561	0.695	0.499
2 3/16 x 2 3/16	0.135	10	3.432	0.605	0.841	0.590
2½ x 2½	0.105	12	3.141	0.804	0.803	0.643
2½ x 2½	0.135	10	4.006	0.979	1.010	0.783

The 2 3/16" size 10 gauge is shown as 2.19" size on the plans.
The 2½" size is shown as 2.51" size on the plans.

NORTH DAKOTA
DEPARTMENT OF TRANSPORTATION

8-6-09

REVISIONS

DATE	CHANGE
7-8-14	Revised Note 3

This document was originally issued and sealed by Roger Weigel, Registration Number PE- 2930 , on 7/8/14 and the original document is stored at the North Dakota Department of Transportation

PAVEMENT MARKING

D-762-4

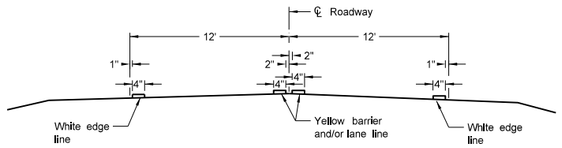

Two Lane Two Way
RURAL ROADWAY

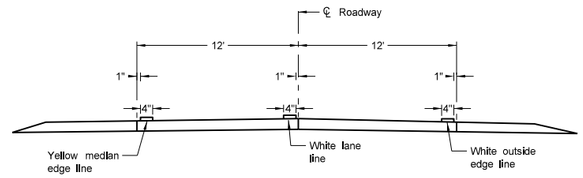

Two Lane Roadway
INTERSTATE HIGHWAY
Concrete Section

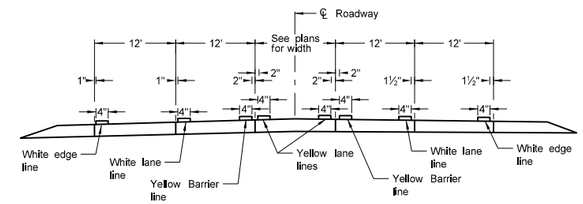

RURAL FIVE LANE ROADWAY
Concrete Section

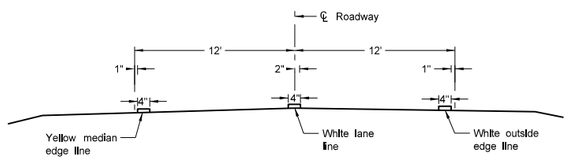

Two Lane Divided
Rural Roadway
PRIMARY HIGHWAY
Asphalt Section

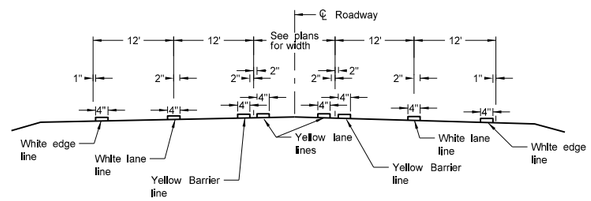

RURAL FIVE LANE ROADWAY
Asphalt Section

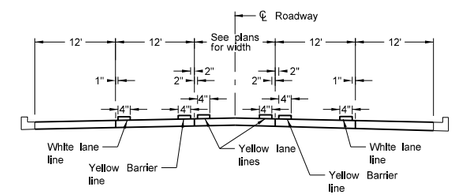

URBAN FIVE LANE SECTION
Concrete Section

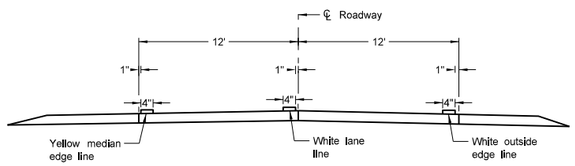

Two Lane Roadway
PRIMARY HIGHWAY
Concrete Section

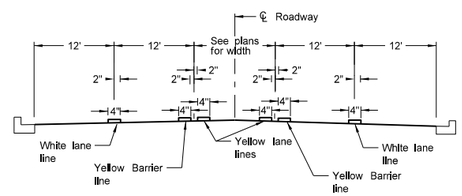

URBAN FIVE LANE SECTION
Asphalt Section

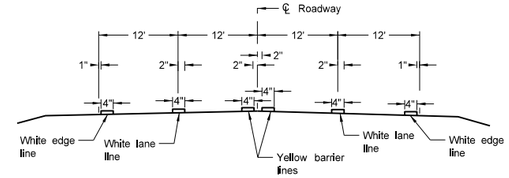

RURAL FOUR LANE ROADWAY
Asphalt Section

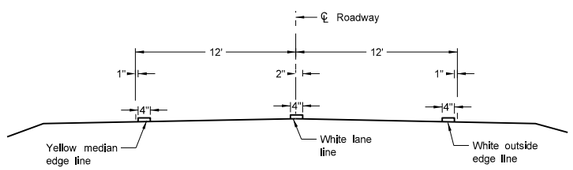

Two Lane Roadway
INTERSTANGE HIGHWAY
Asphalt Section

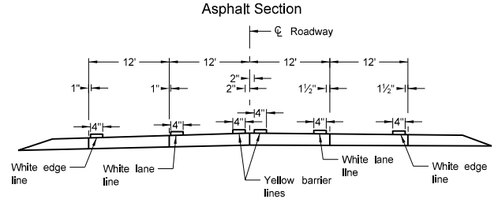

RURAL FOUR LANE ROADWAY
Concrete Section

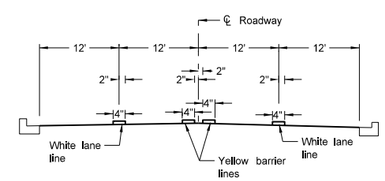

URBAN FOUR LANE SECTION
Asphalt Section

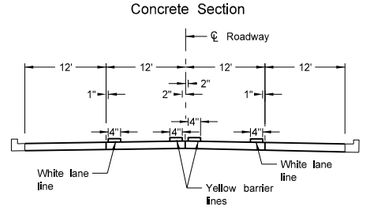

URBAN FOUR LANE SECTION
Concrete Section

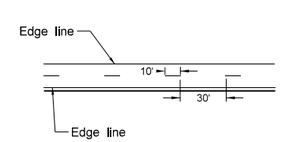

CENTERLINE PAVEMENT MARKING SKIP SPACING DETAIL

NOTES:

1. Edge lines shall be continued through private drives and field drives and broken for intersections.

NORTH DAKOTA DEPARTMENT OF TRANSPORTATION	
12-1-10	
REVISIONS	
DATE	CHANGE

This document was originally issued and sealed by Roger Weigel, Registration Number PE- 2930, on 12-1-10 and the original document is stored at the North Dakota Department of Transportation