STATE	PROJECT NO.	SECTION NO.	SHEET NO.
ND	SOIA-7-002(130)019	100	1

SIGN NUMBER	SIGN SIZE	DESCRIPTION	AMOUNT REQUIRED BY PHASE NO. 1	2	3		TOTAL AMOUNT REQUIRED	UNITS PER AMOUNT	UNITS SUB TOTAL
D3-36	36"x6"	STREET NAME SIGN (Sign and installation only)						6	
G20-1-60	60"x24"	ROAD WORK NEXT __ MILES						34	
G20-1b-60	60"x24"	WORK IN PROGRESS/ NO WORK IN PROGRESS (Sign and installation only)						26	
G20-2-48	48"x24"	END ROAD WORK						19	
G20-2A-36	**36"x18"**	**END ROAD WORK**	**4**	**4**			**4**	**22**	**88**
G20-4-36	36"x18"	PILOT CAR FOLLOW ME (Mounted to back of pilot car)						18	
G20-10-108	108"x48"	CONTRACTOR SIGN						64	
G20-50a-72	72"x36"	ROAD WORK NEXT __ MILES RT & LT ARROWS						37	
G20-52a-72	72"x24"	ROAD WORK NEXT __ MILES RT or LT ARROW						30	
G20-55-96	**96"x48"**	**SPEED LIMIT ENFORCED - MINIMUM FEE $80 WHEN WORKERS PRESENT**		**4**			**4**	**59**	**236**
M1-1-36	36"x36"	INTERSTATE ROUTE MARKER (Post and installation only)						10	
M1-4-24	24"x24"	U.S. ROUTE MARKER (Post and installation only)						10	
M1-5-24	24"x24"	STATE ROUTE MARKER (Post and installation only)						10	
M3-1-24	24"x12"	NORTH (Mounted on route marker post)						7	
M3-2-24	24"x12"	EAST (Mounted on route marker post)						7	
M3-3-24	24"x12"	SOUTH (Mounted on route marker post)						7	
M3-4-24	24"x12"	WEST (Mounted on route marker post)						7	
M4-8-24	24"x12"	DETOUR (Mounted on route marker post)						7	
M4-8a-24	**24"X18"**	**END DETOUR**	**2**	**3**	**3**		**3**	**13**	**39**
M4-9-30	**30"x24"**	**DETOUR ARROW RIGHT or LEFT/AHD AND RT or LT**	**29**	**35**	**25**		**35**	**15**	**525**
M4-9a-30	**30"x24"**	**BIKE/PEDESTRIAN DETOUR (WITH ARROW)**	**15**	**14**	**17**		**17**	**15**	**255**
M4-10-48	**48"x18"**	**DETOUR ARROW RIGHT or LEFT**			**1**		**1**	**23**	**23**
M5-1-21	21"x15"	ARROW AHD AND RT or LT(Mounted on route marker post)						7	
M5-2-21	21"x15"	ARROW AHD UP & RT or LT (Mounted on route marker post)						7	
M6-1-21	21"x15"	ARROW RT or LT (Mounted on route marker post)						7	
M6-2-21	21"x15"	ARROW UP & RT or LT (Mounted on route marker post)						7	
M6-3-21	21"x15"	ARROW AHD (Mounted on route marker post)						7	
R1-1-30	**30"X30"**	**STOP**	**2**	**3**	**1**		**3**	**17**	**51**
R1-1-48	48"x48"	STOP						32	
R1-1a-18	**18"x18"**	**STOP and SLOW PADDLE Back to Back**	**2**	**2**	**2**		**2**	**5**	**10**
R1-2-60	60"x60"	YIELD						29	
R2-1-24	**24"X30"**	**SPEED LIMIT _**		**12**			**12**	**15**	**180**
R2-1-48	48"x60"	SPEED LIMIT _						39	
R2-1a-24	**24"x18"**	**MINIMUM FEE $80 (Mounted on Speed Limit post)**		**8**			**8**	**10**	**80**
R3-5-30	**30"X36"**	**RIGHT TURN ONLY**	**1**				**1**	**18**	**18**
R3-7-48	48"x48"	LEFT or RIGHT LANE MUST TURN LEFT or RIGHT						35	
R3-8b-54	**54"x30"**	**LEFT TURN ONLY, THRU, RIGHT TURN ONLY**		**2**			**2**	**29**	**58**
R3-8 (mod)	**48"X30"**	**LEFT TURN ONLY, THRU, THRU AND RIGHT TURN**		**1**			**1**	**29**	**29**
R4-1-48	48"x60"	DO NOT PASS						39	
R4-7-48	48"x60"	KEEP RIGHT SYMBOL						39	
R5-1-48	48"x48"	DO NOT ENTER						35	
R6-1-36	36"x12"	ONE WAY RIGHT or LEFT						13	
R7-1-12	12"x18"	NO PARKING						11	
R9-9-24	**24"X12"**	**SIDEWALK CLOSED**	**4**	**6**	**9**		**9**	**3**	**27**
R9-11-24	**24"X18"**	**SIDEWALK CLOSED AHEAD CROSS HERE with ARROW RT or LT**	**1**	**1**	**1**		**1**	**4**	**4**
R9-11a-24	**24"X12"**	**SIDEWALK CLOSED CROSS HERE with ARROW RT or LT**	**1**	**2**	**3**		**3**	**3**	**9**
R10-6-24	24"x36"	STOP HERE ON RED						16	
R11-2-48	**48"x30"**	**ROAD CLOSED**	**4**	**5**	**7**		**7**	**28**	**196**
R11-2a-48	48"x30"	STREET CLOSED						28	
R11-3a-60	**60"x30"**	**ROAD CLOSED __ MILES AHEAD LOCAL TRAFFIC ONLY**	**1**	**3**	**2**		**3**	**31**	**93**
R11-3c-60	60"x30"	STREET CLOSED __ MILES AHEAD LOCAL TRAFFIC ONLY						31	
R11-4a-60	**60"x30"**	**STREET CLOSED TO THRU TRAFFIC**	**1**				**1**	**31**	**31**
W1-3-48	48"x48"	RIGHT or LEFT SHARP REVERSE CURVE ARROW						35	
W1-4-48	48"x48"	RIGHT or LEFT REVERSE CURVE ARROW						35	
W1-4b-48	48"x48"	DOUBLE RIGHT or LEFT REVERSE CURVE ARROW						35	
W1-6-48	**48"x24"**	**LARGE ARROW**	**3**	**2**			**3**	**26**	**78**
W3-1-48	48"x48"	STOP AHEAD SYMBOL						35	
W3-3-48	48"x48"	SIGNAL AHEAD SYMBOL						35	
W3-4-48	48"x48"	BE PREPARED TO STOP						35	
W3-5-36	**36"x36"**	**SPEED REDUCTION AHEAD**		**4**			**4**	**27**	**108**
W3-5-48	48"x48"	SPEED REDUCTION AHEAD						35	
W4-2-36	**36"x36"**	**RIGHT or LEFT TRANSITION SYMBOL**	**4**	**4**			**4**	**27**	**108**
W4-2-48	48"x48"	RIGHT or LEFT LANE TRANSITION SYMBOL						35	
W5-1-48	48"x48"	ROAD NARROWS						35	
W5-8-48	48"x48"	THRU TRAFFIC RIGHT LANE						35	
W5-9-48	48"x48"	ROAD WORK TRAFFIC ONLY DOWN & LT or RT ARROW						35	
W6-3-36	**36"x36"**	**TWO WAY TRAFFIC SYSTEM**		**4**			**4**	**27**	**108**
W6-3-48	48"x48"	TWO WAY TRAFFIC SYMBOL						35	
W8-1-48	48"x48"	BUMP						35	
W8-3-48	48"x48"	PAVEMENT ENDS						35	
W8-7-48	48"x48"	LOOSE GRAVEL						35	
W8-9a-48	48"x48"	SHOULDER DROP-OFF						35	
W8-11-48	48"x48"	UNEVEN LANES						35	
W8-12-48	48"x48"	NO CENTER STRIPE						35	
W8-53-48	48"x48"	TRUCKS ENTERING HIGHWAY						35	
W8-54-48	48"x48"	TRUCKS ENTERING AHEAD or __ FT.						35	
W8-55-48	48"x48"	TRUCKS CROSSING AHEAD or __ FT.						35	
W8-56-48	48"x48"	TRUCKS EXITING HIGHWAY						35	
W9-3a-48	48"x48"	CENTER LANE CLOSED SYMBOL						35	
W12-2-36	**36"x36"**	**LOW CLEARANCE SYMBOL**	**4**	**4**	**4**		**4**	**27**	**108**
W12-2-48	48"x48"	LOW CLEARANCE SYMBOL						35	
W13-1-24	24"x24"	__ MPH ADVISORY SPEED PLATE (Mounted on warning sign post)						11	

SIGN NUMBER	SIGN SIZE	DESCRIPTION	AMOUNT REQUIRED BY PHASE NO. 1	2	3		TOTAL AMOUNT REQUIRED	UNITS PER AMOUNT	UNITS SUB TOTAL
W13-4-48	48"x60"	RAMP ARROW						39	
W14-3-48	48"x36"	NO PASSING ZONE						23	
W20-1-36	**36"x36"**	**ROAD WORK AHEAD or _FT or _MILE**		**4**			**4**	**27**	**108**
W20-1-48	48"x48"	ROAD WORK AHEAD or _FT or _ MILE						35	
W20-2-36	**36"x36"**	**DETOUR AHEAD or _FT or _MILE**	**10**	**10**	**11**		**11**	**27**	**297**
W20-2-48	48"x48"	DETOUR AHEAD or __ FT						35	
W20-3-48	48"x48"	ROAD or STREET CLOSED AHEAD or __ FT.						35	
W20-4-48	48"x48"	ONE LANE ROAD AHEAD or __ FT.						35	
W20-5-36	**36"x36"**	**RIGHT or LEFT LANE CLOSED AHEAD or _FT**	**4**	**4**			**4**	**27**	**108**
W20-5-48	48"x48"	RIGHT or LEFT LANE CLOSED AHEAD or __ FT.						35	
W20-7a-48	**48"x48"**	**FLAGGING SYMBOL**	**2**	**2**	**2**		**2**	**35**	**70**
W20-7k-24	24"x18"	__ FEET (Mounted on warning sign post)						10	
W20-8-48	48"x48"	STREET CLOSED						35	
W20-51-48	48"x48"	EQUIPMENT WORKING						35	
W20-52-54	54"x12"	NEXT __ MILES (Mounted on warning sign post)						12	
W21-1a-48	48"x48"	WORKERS SYMBOL						35	
W21-2-48	48"x48"	FRESH OIL						35	
W21-3-48	48"x48"	ROAD MACHINERY AHEAD or __ FT						35	
W21-5-48	48"x48"	SHOULDER WORK						35	
W21-5a-48	48"x48"	RIGHT or LEFT SHOULDER CLOSED						35	
W21-5b-48	48"x48"	RIGHT or LEFT SHOULDER CLOSED AHEAD or __ FT.						35	
W21-6a-48	48"x48"	SURVEY CREW AHEAD						35	
W21-50-48	48"x48"	BRIDGE PAINTING AHEAD or __ FT.						35	
W21-51-48	48"x48"	MATERIAL ON ROADWAY						35	
W22-8-48	48"x48"	FRESH OIL LOOSE ROCK						35	

SPECIAL SIGNS

Consign 1	**96"x48"**	**18th St Closed At US 2 Use Box Elder St**	**4**	**4**	**4**		**4**	**53**	**212**
Consign 2	**60"x18"**	**18th St W**	**29**	**35**	**25**		**35**	**25**	**875**
Consign 3	**84"x48"**	**18th St Closed At US 2 Use 9th Ave W**	**2**	**2**	**2**		**2**	**48**	**96**

SPEC & CODE

704-1000	**TRAFFIC CONTROL SIGNS**	**TOTAL UNITS**	**4228**

NOTE:
If additional signs are required, units will be calculated using the formula from Section III-19.06 of the Design Manual.
http://www.dot.nd.gov/

SPEC & CODE	DESCRIPTION	UNIT	QUANTITY BY PHASE NO. 1	2	3		TOTAL QUANTITY
704-0100	**FLAGGING**	MHR	**1080**	**3600**	**720**		**5400**
704-1041	ATTENUATION DEVICE-TYPE B-55	EACH					
704-1043	ATTENUATION DEVICE-TYPE B-65	EACH					
704-1044	ATTENUATION DEVICE-TYPE B-70	EACH					
704-1045	**ATTENUATION DEVICE-TYPE B-75**	EACH		**1**			**1**
704-1050	TYPE I BARRICADES	EACH					
704-1051	TYPE II BARRICADES	EACH					
704-1052	**TYPE III BARRICADES**	EACH	**56**	**56**	**87**		**87**
704-1060	**DELINEATOR DRUMS**	EACH	**102**	**118**	**37**		**118**
704-1065	TRAFFIC CONES	EACH					
704-1067	**TUBULAR MARKERS**	EACH		**66**			**66**
704-1070	DELINEATOR	EACH					
704-1072	FLEXIBLE DELINEATORS	EACH					
704-1081	VERTICAL PANELS - BACK TO BACK	EACH					
704-1085	SEQUENCING ARROW PANEL - TYPE A	EACH					
704-1086	SEQUENCING ARROW PANEL - TYPE B	EACH					
704-1087	**SEQUENCING ARROW PANEL - TYPE C**	EACH	**2**	**2**			**2**
704-1088	SEQUENCING ARROW PANEL - TYPE C - CROSSOVER	EACH					
704-1095	TYPE B FLASHERS	EACH					
704-3501	PORTABLE PRECAST CONCRETE MED BARRIER	LF					
704-3510	**PRECAST CONCRETE MED BARRIER - STATE FURNISHED**	EACH		**100**			**100**
752-0911	**TEMPORARY SAFETY FENCE**	LF		**293**	**200**		**493**
762-0200	RAISED PAVEMENT MARKERS	EACH					
762-0420	SHORT TERM 4IN LINE - TYPE R	LF					
762-0430	SHORT TERM 4IN LINE - TYPE NR	LF					
762-1500	**OBLITERATION OF PVMT MK**	SF	**2950**				**2950**
772-2110	FLASHING BEACON - POST MOUNTED	EACH					

This document was originally issued and sealed by Jacob Nordick, Registration Number PE- 6736, on 1/22/14 and the original document is stored at the North Dakota Department Of Transportation

Traffic Control Devices List

Williston Intersection US 2 & 18th St W

STATE	PROJECT NO.	SECTION NO.	SHEET NO.
ND	SOIA-7-002(130)019	100	2

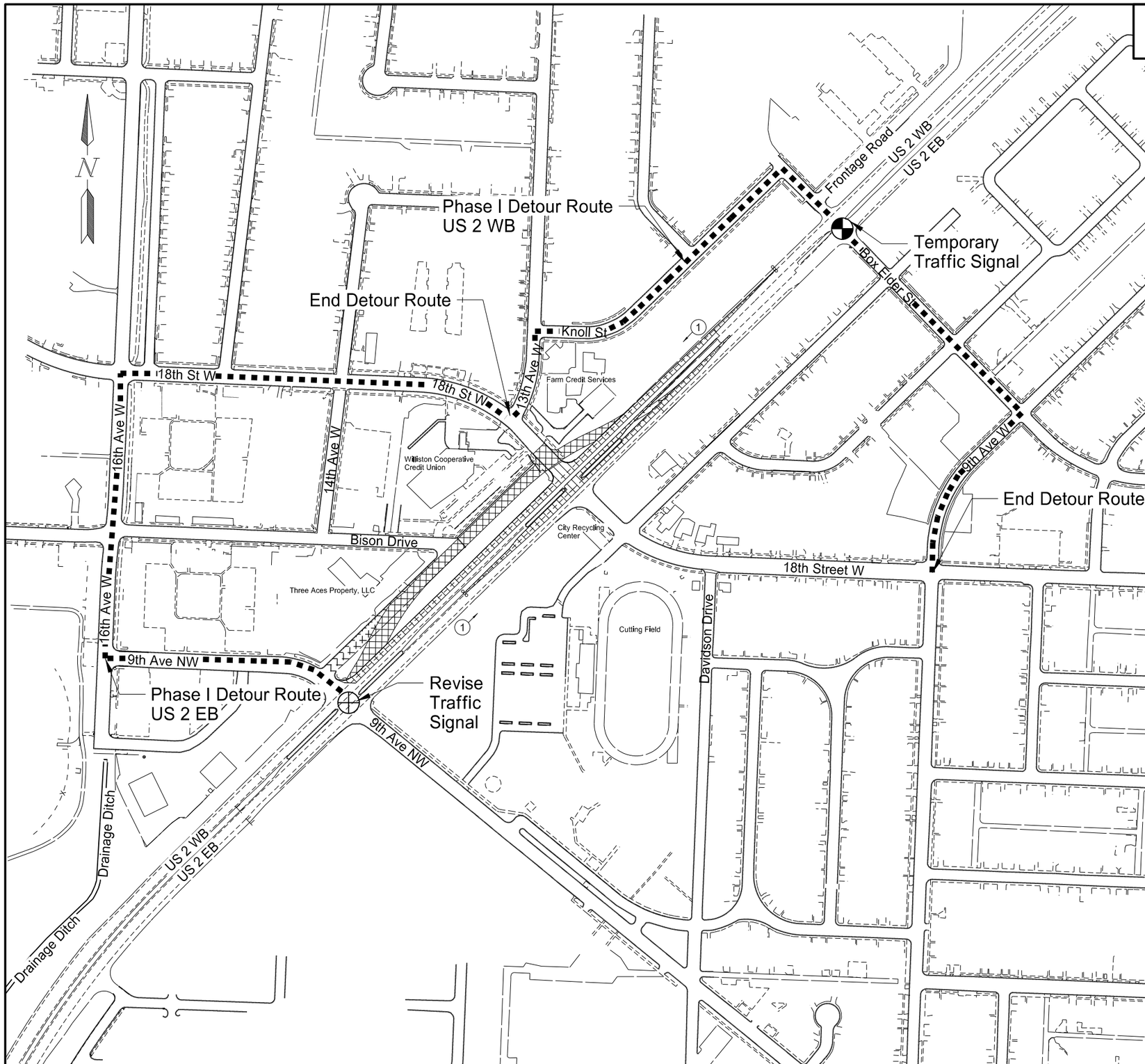

Phase 1: Construct Temporary Bypass

- Revise traffic signal system at 9th Ave NW. Install temporary traffic signal at Box Elder St. Install temporary lighting.
- Close westbound right turn lane and eastbound left turn lane at 18th St W and outside through lane for WB US 2 between 9th Ave NW and Box Elder St
- Close westbound left turn lane at 18th St W and through lane for EB US 2 between 9th Ave NW and Box Elder St
- Close 18th St W west of US 2; traffic will be detoured via 9th Ave NW or Box Elder St
- 18th St W intersection will operate as EB US 2 right-in / right-out only
- Install gravity storm sewer and re-grade US 2 WB ditch from 11th St W to Bison Drive.
- Construct bypass.
- After bypass is constructed, close remaining westbound US 2 through lane and divert traffic onto bypass. Construct remainder of eastbound bypass on now closed WB US 2.
- With north/east end of bypass constructed the contractor can install remaining barricades, barrels, and temporary pavement markings under traffic at the intersection of 9th Ave.
- Switch EB US 2 traffic onto bypass when traffic control is set up.

Work Area

Lane Closure

Detour Route

Temporary Traffic Signal

Revise Traffic Signal

Traffic Direction and Number of Lanes

This document was originally issued and sealed by Jacob Nordick, Registration Number PE- 6736, on 12/11/13 and the original document is stored at the North Dakota Department of Transportation

Work Zone Traffic Control

Williston Intersection US 2 & 18th St W & Bison Dr

Phase 1 Work Zone and Detour Layout

STATE	PROJECT NO.	SECTION NO.	SHEET NO.
ND	SOIA-7-002(130)019	100	3

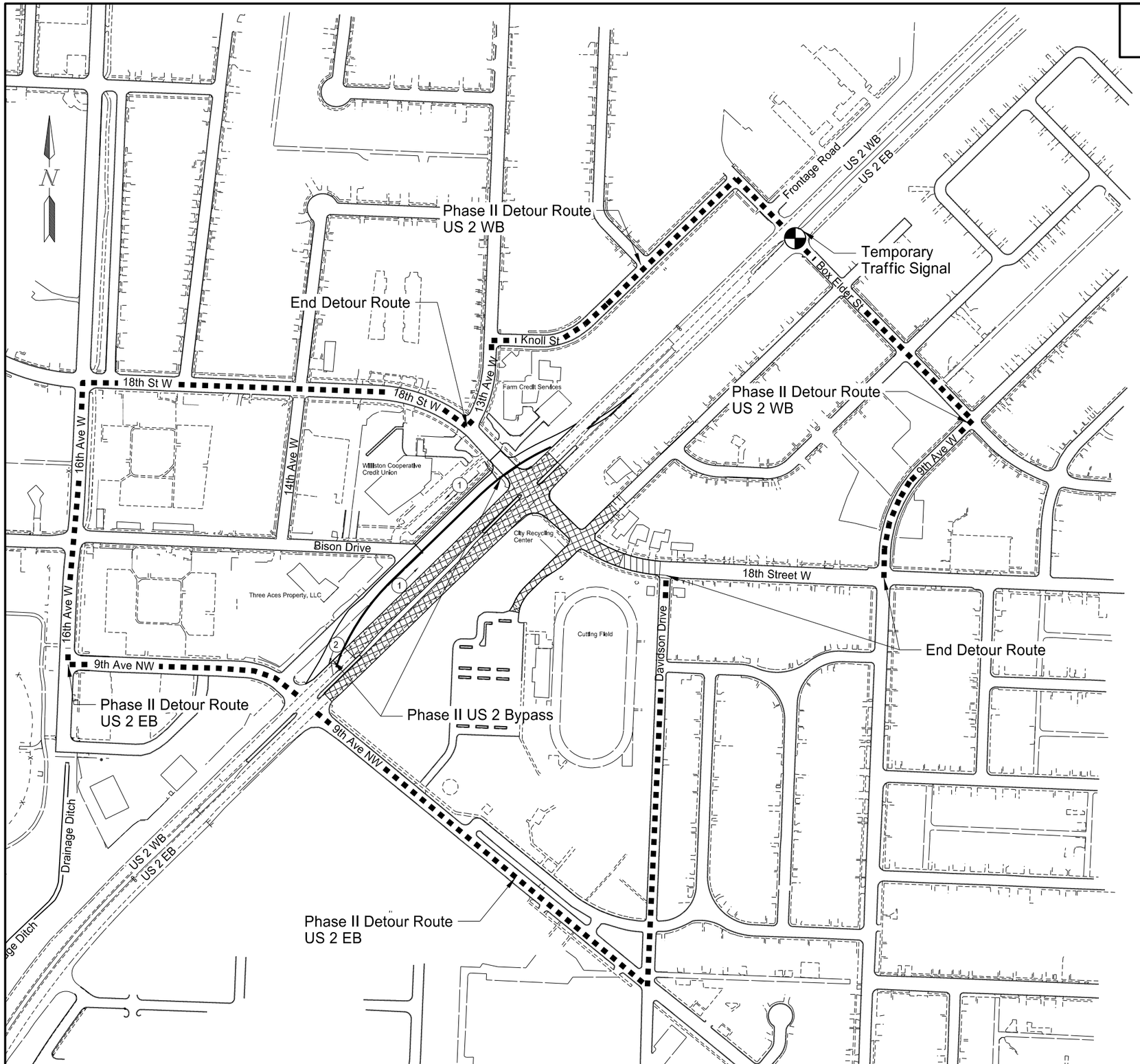

Phase 2: Construct Bridge, US 2, Loop Ramp, School Driveway, and 18th St W east of US 2

- Traffic on US 2 is diverted along bypass route with intersection at 9th Ave NW fully operational and intersection with 18th Street as westbound right-in/right-out only.
- Lower watermain conflicts, replace Cutting Field sanitary sewer line, and relocate other utilities under contract.
- Traffic on Bison Drive/18th Street will be detoured through neighborhood via 9th Ave NW or Box Elder St intersections with US 2.
- Access to "Cutting Field" parking lot will be facilitated through driveway off 9th Street NW.

Traffic

Work Area

Work Under Traffic

Detour Route

Temporary Traffic Signal

Traffic Direction and Number of Lanes

This document was originally issued and sealed by Jacob Nordick, Registration Number PE- 6736, on 12/11/13 and the original document is stored at the North Dakota Department of Transportation

Work Zone Traffic Control

Williston Intersection US 2 & 18th St W & Bison Dr

Phase 2 Work Zone and Detour Layout

STATE	PROJECT NO.	SECTION NO.	SHEET NO.
ND	SOIA-7-002(130)019	100	4

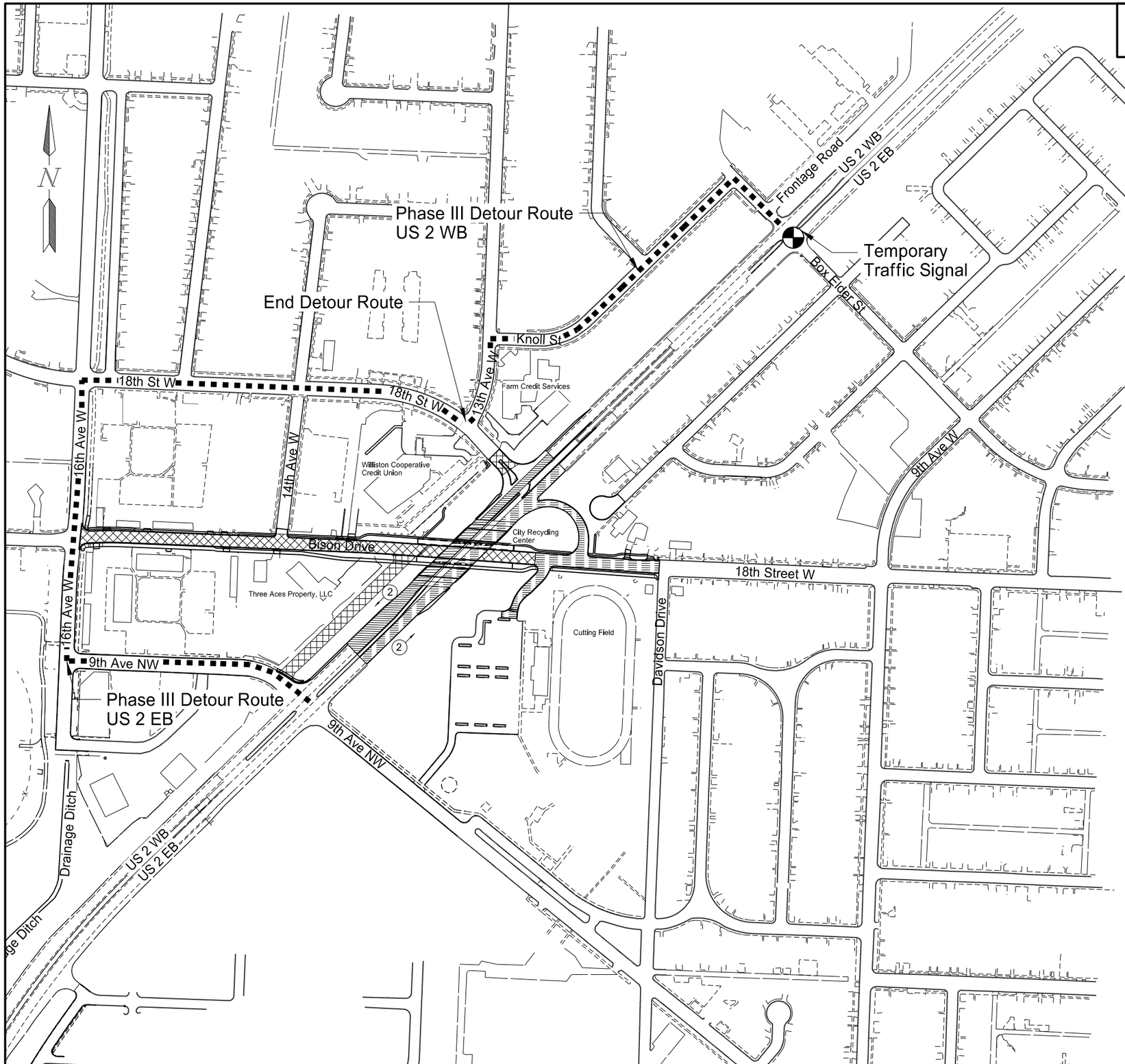

Phase 3: Construct remainder of Bison Drive and 18th Street West 3/4 access

- Remove US 2 bypass pavement.
- Construct 18th Street West 3/4 access prior to closing Bison Drive to maintain access to Credit Union; US 2 traffic to use detour route while 18th Street, west of US 2, is closed.
- Apartment buildings and businesses along Bison Drive will have access from alleyways or private driveways abutting either 9th Ave NW or 18th Street W.

Traffic

Work Area

Detour Route

Temporary Traffic Signal

Traffic Direction and Number of Lanes

This document was originally issued and sealed by Jacob Nordick, Registration Number PE- 6736, on 12/11/13 and the original document is stored at the North Dakota Department of Transportation

Work Zone Traffic Control

Williston Intersection US 2 & 18th St W & Bison Dr

Phase 3 Work Zone and Detour Layout

STATE	PROJECT NO.	SECTION NO.	SHEET NO.
ND	SOIA-7-002(130)019	100	5

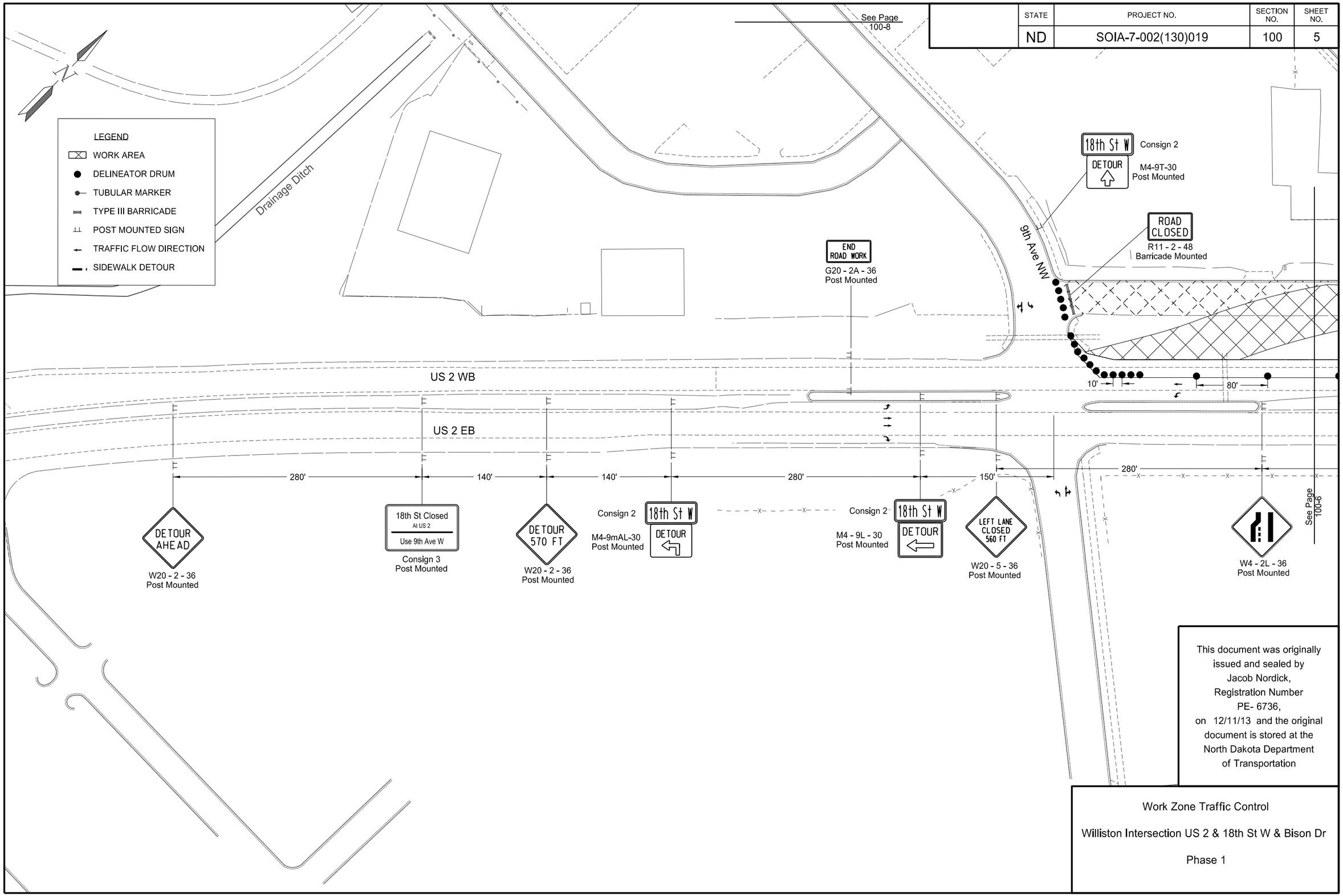

This document was originally issued and sealed by Jacob Nordick, Registration Number PE- 6736, on 12/11/13 and the original document is stored at the North Dakota Department of Transportation

Work Zone Traffic Control

Williston Intersection US 2 & 18th St W & Bison Dr

Phase 1

STATE	PROJECT NO.	SECTION NO.	SHEET NO.
ND	SOIA-7-002(130)019	100	6

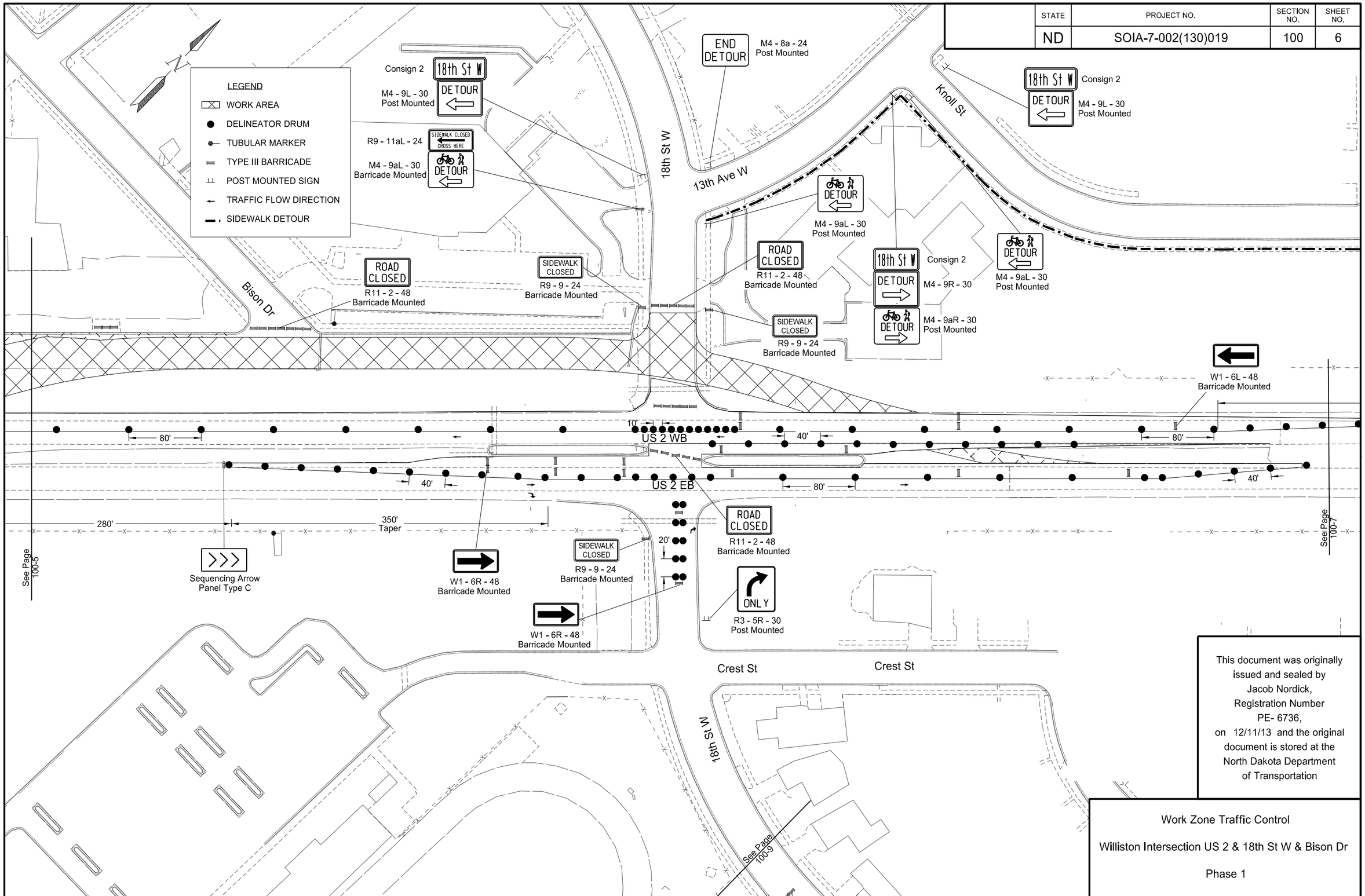

This document was originally issued and sealed by Jacob Nordick, Registration Number PE- 6736, on 12/11/13 and the original document is stored at the North Dakota Department of Transportation

Work Zone Traffic Control

Williston Intersection US 2 & 18th St W & Bison Dr

Phase 1

STATE	PROJECT NO.	SECTION NO.	SHEET NO.
ND	SOIA-7-002(130)019	100	7

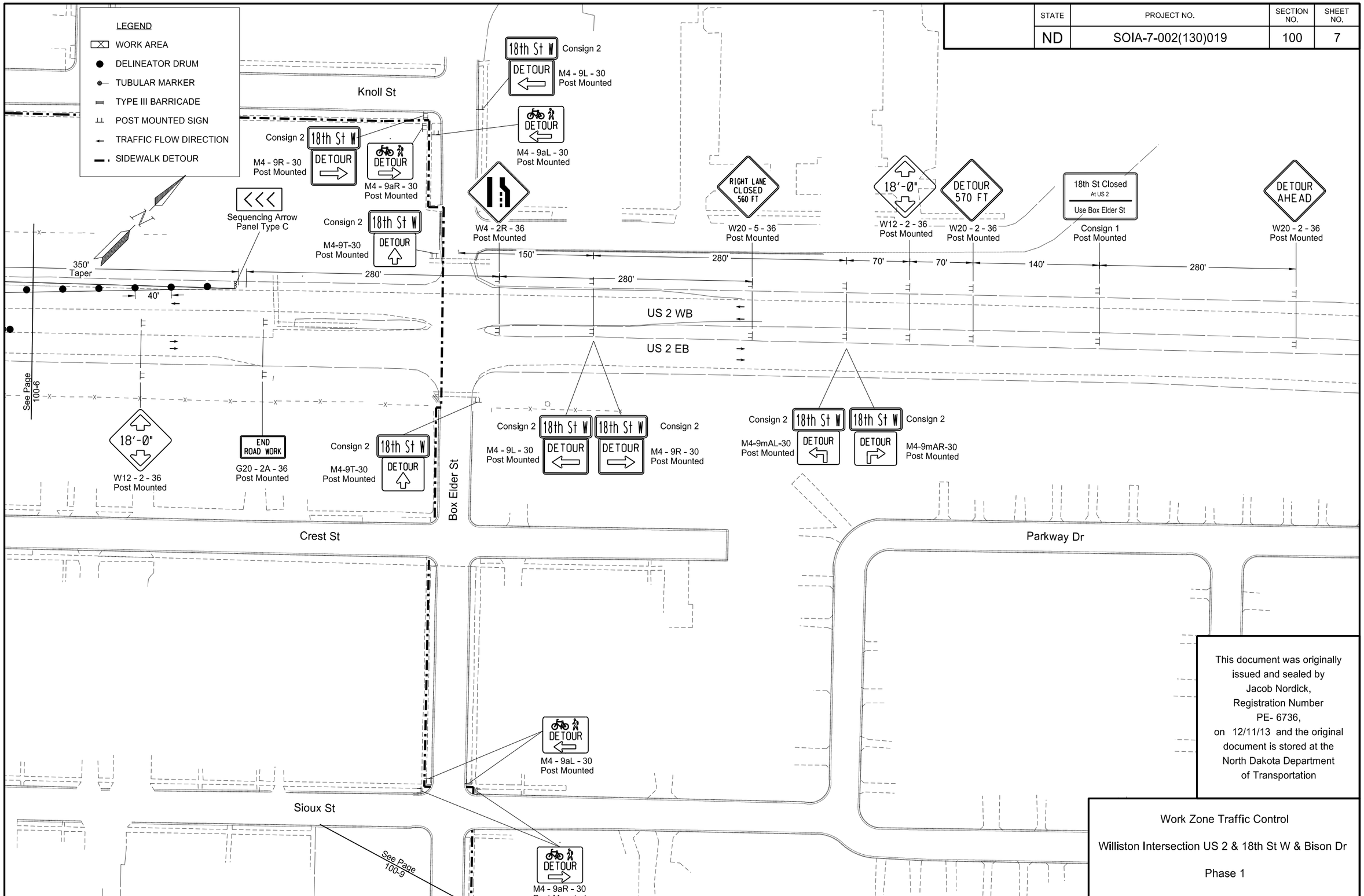

This document was originally issued and sealed by Jacob Nordick, Registration Number PE- 6736, on 12/11/13 and the original document is stored at the North Dakota Department of Transportation

Work Zone Traffic Control

Williston Intersection US 2 & 18th St W & Bison Dr

Phase 1

STATE	PROJECT NO.	SECTION NO.	SHEET NO.
ND	SOIA-7-002(130)019	100	8

LEGEND

- WORK AREA
- DELINEATOR DRUM
- TUBULAR MARKER
- TYPE III BARRICADE
- POST MOUNTED SIGN
- TRAFFIC FLOW DIRECTION
- SIDEWALK DETOUR

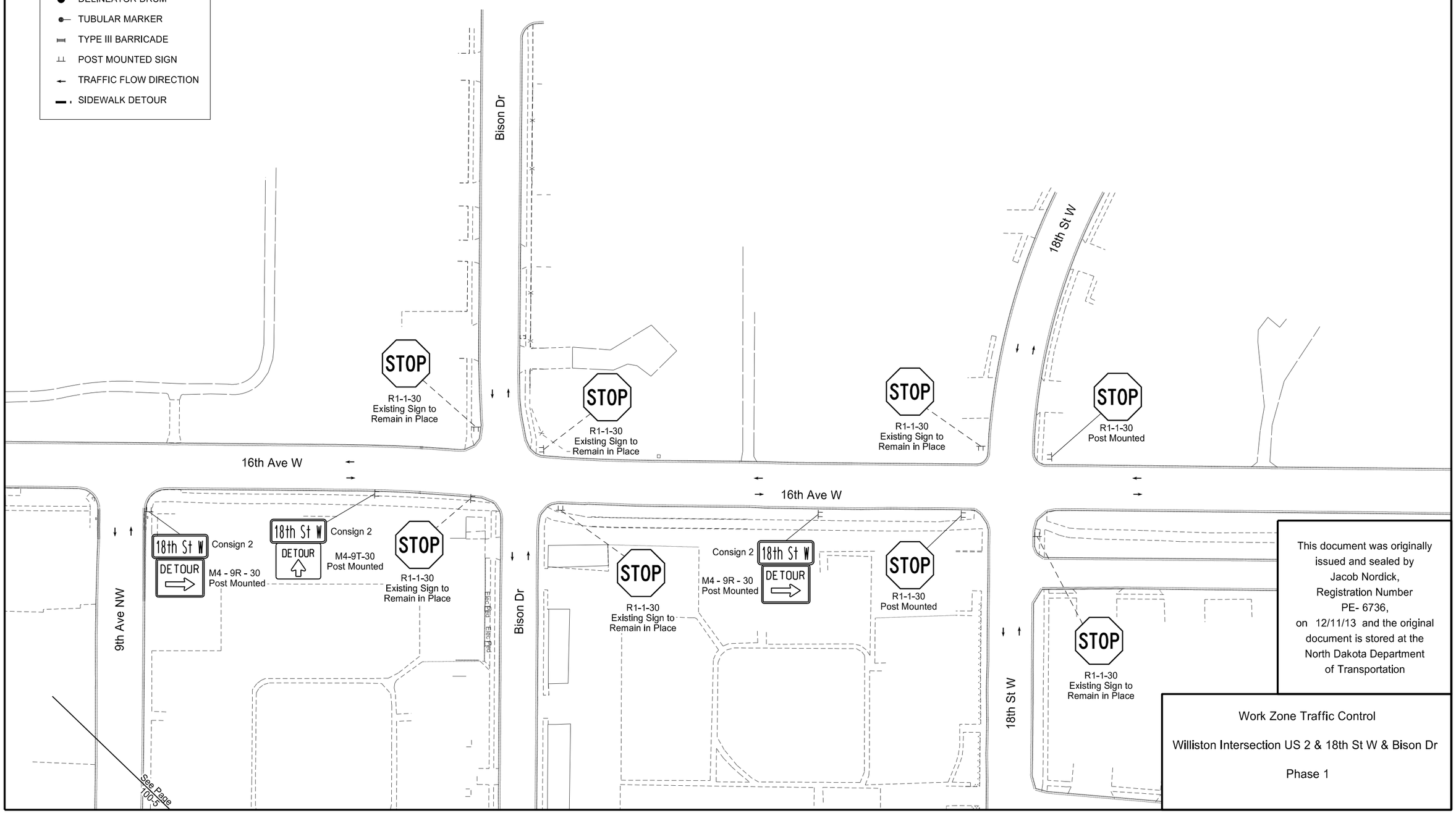

This document was originally issued and sealed by Jacob Nordick, Registration Number PE- 6736, on 12/11/13 and the original document is stored at the North Dakota Department of Transportation

Work Zone Traffic Control

Williston Intersection US 2 & 18th St W & Bison Dr

Phase 1

STATE	PROJECT NO.	SECTION NO.	SHEET NO.
ND	SOIA-7-002(130)019	100	9

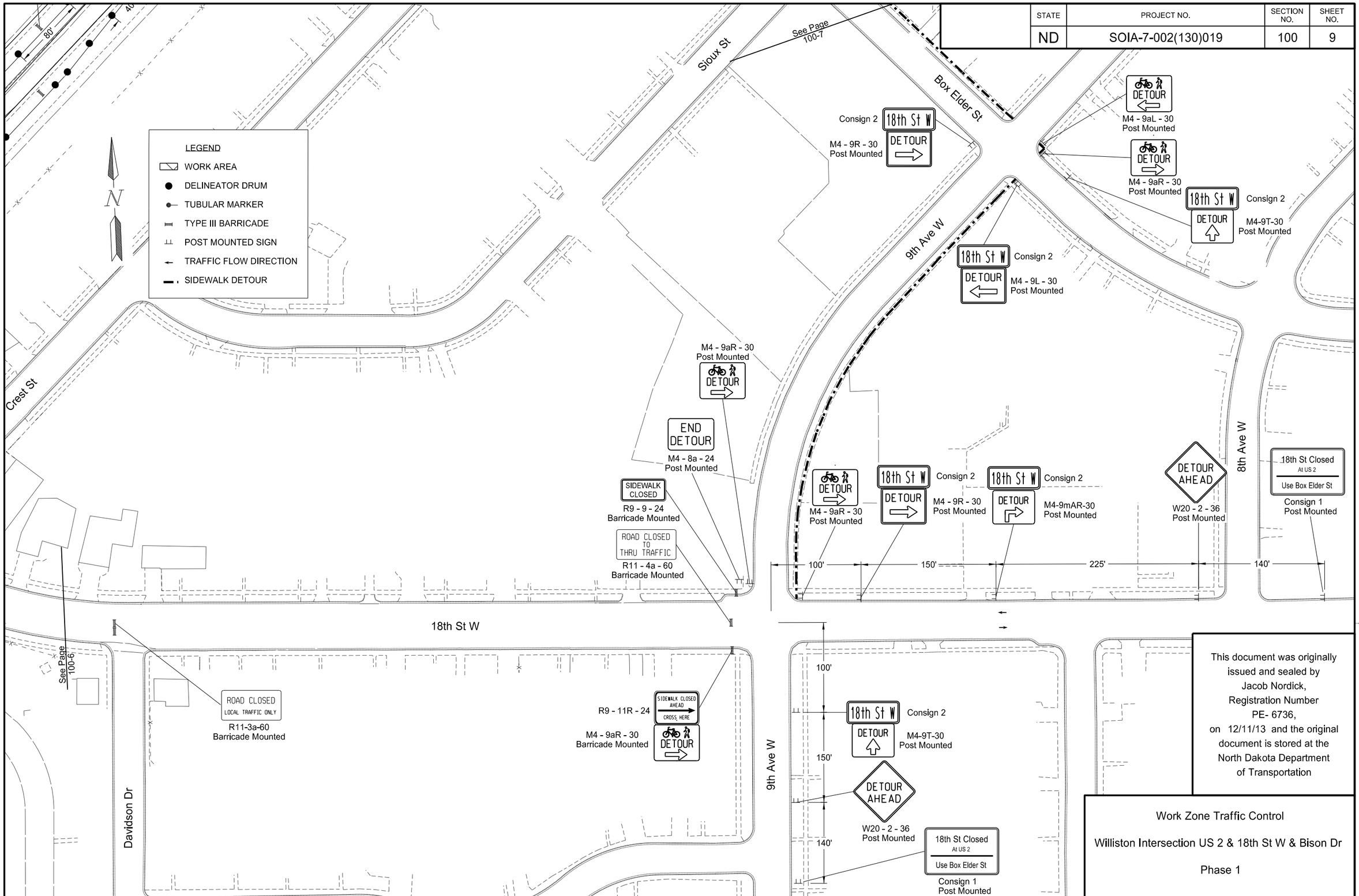

This document was originally issued and sealed by Jacob Nordick, Registration Number PE- 6736, on 12/11/13 and the original document is stored at the North Dakota Department of Transportation

Work Zone Traffic Control

Williston Intersection US 2 & 18th St W & Bison Dr

Phase 1

STATE	PROJECT NO.	SECTION NO.	SHEET NO.
ND	SOIA-7-002(130)019	100	10

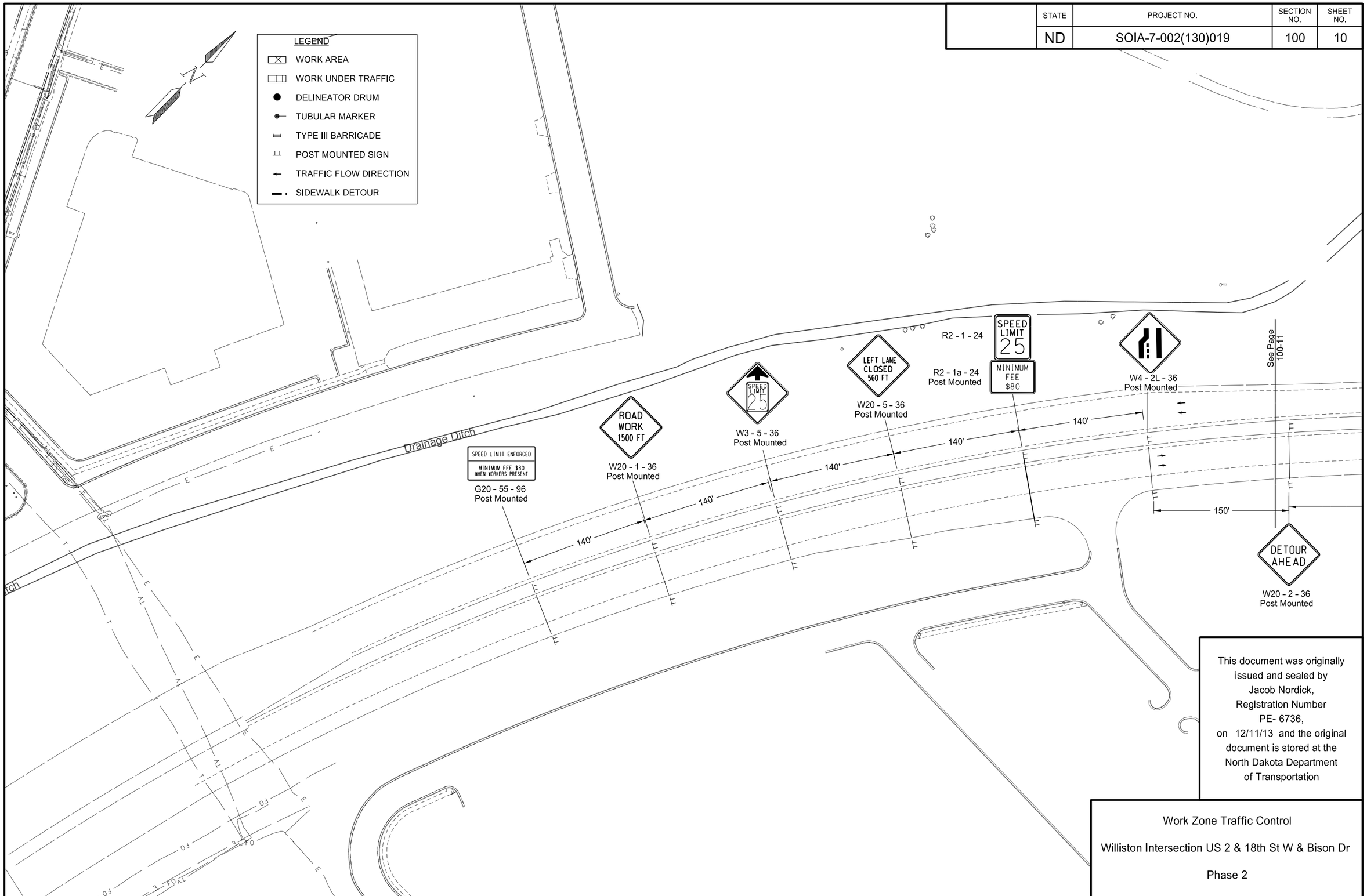

This document was originally issued and sealed by Jacob Nordick, Registration Number PE- 6736, on 12/11/13 and the original document is stored at the North Dakota Department of Transportation

Work Zone Traffic Control

Williston Intersection US 2 & 18th St W & Bison Dr

Phase 2

STATE	PROJECT NO.	SECTION NO.	SHEET NO.
ND	SOIA-7-002(130)019	100	11

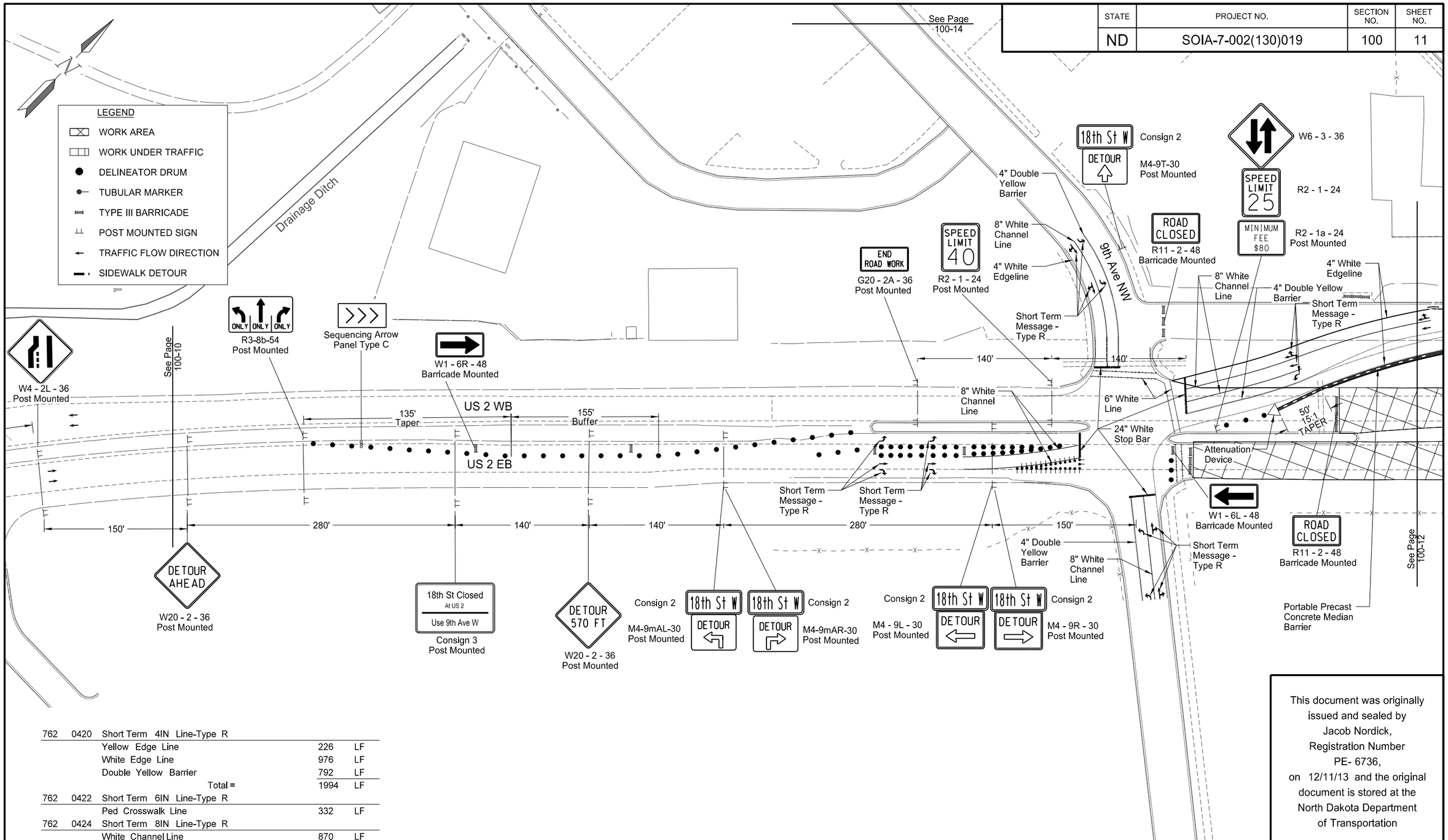

762	0420	Short Term 4IN Line-Type R		
		Yellow Edge Line	226	LF
		White Edge Line	976	LF
		Double Yellow Barrier	792	LF
		Total =	1994	LF
762	0422	Short Term 6IN Line-Type R		
		Ped Crosswalk Line	332	LF
762	0424	Short Term 8IN Line-Type R		
		White Channel Line	870	LF
762	0426	Short Term 24IN Line-Type R		
		White Stop Bar	115	LF
762	0440	Short Term Message-Type R		
		Arrow (LT) 16 SF x 7 EA =	112	SF
		Arrow (RT) 16 SF x 2 EA =	32	SF
		Arrow (STRT) 12 SF x 3 EA =	36	SF
		Arrow (STRT-RT) 27 SF x 5 EA =	135	SF
		Total =	315	SF

This document was originally issued and sealed by Jacob Nordick, Registration Number PE- 6736, on 12/11/13 and the original document is stored at the North Dakota Department of Transportation

Work Zone Traffic Control

Williston Intersection US 2 & 18th St W & Bison Dr

Phase 2

STATE	PROJECT NO.	SECTION NO.	SHEET NO.
ND	SOIA-7-002(130)019	100	12

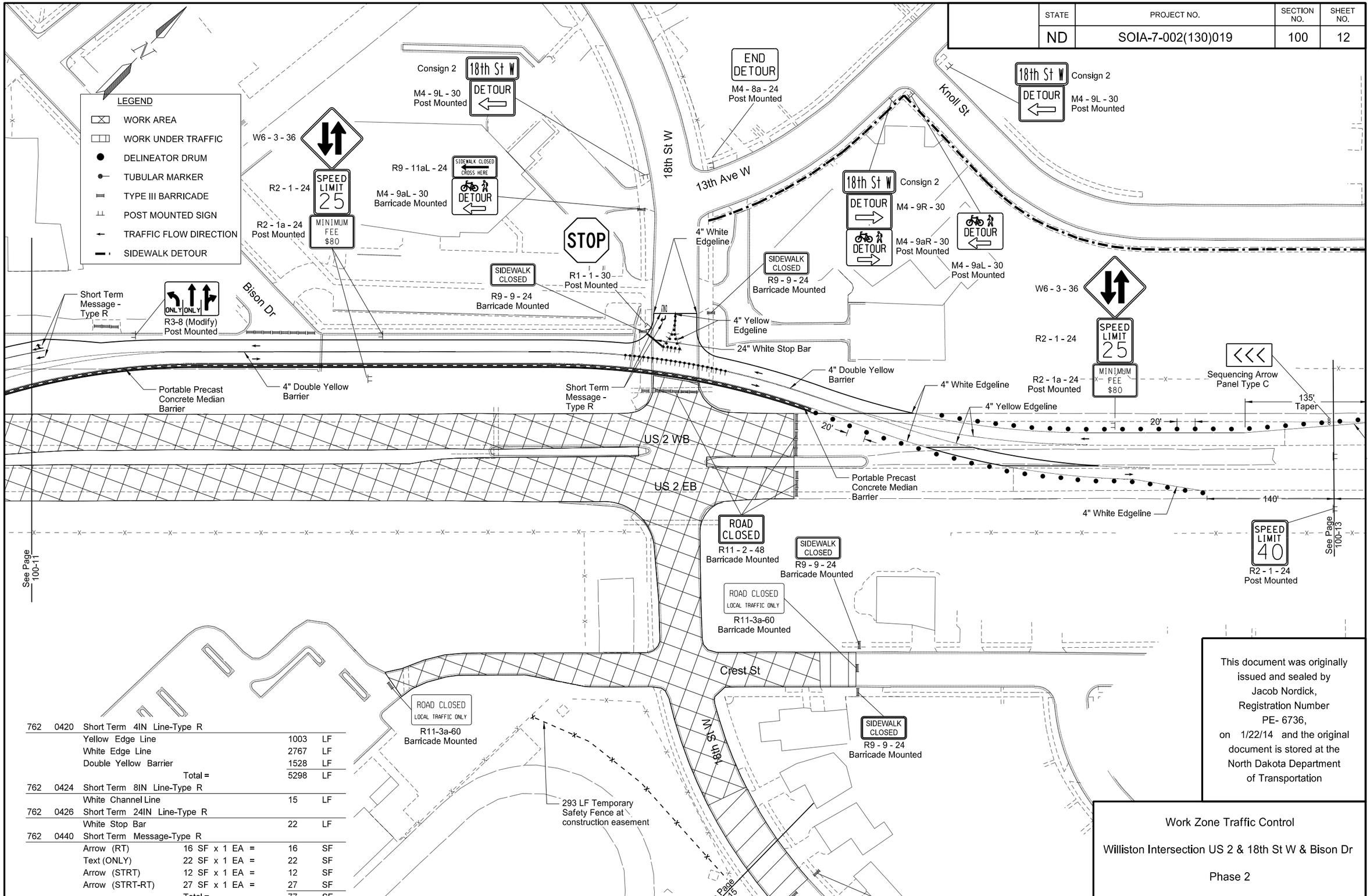

762	0420	Short Term 4IN Line-Type R		
		Yellow Edge Line	1003	LF
		White Edge Line	2767	LF
		Double Yellow Barrier	1528	LF
		Total =	5298	LF
762	0424	Short Term 8IN Line-Type R		
		White Channel Line	15	LF
762	0426	Short Term 24IN Line-Type R		
		White Stop Bar	22	LF
762	0440	Short Term Message-Type R		
		Arrow (RT) 16 SF x 1 EA =	16	SF
		Text (ONLY) 22 SF x 1 EA =	22	SF
		Arrow (STRT) 12 SF x 1 EA =	12	SF
		Arrow (STRT-RT) 27 SF x 1 EA =	27	SF
		Total =	77	SF

This document was originally issued and sealed by Jacob Nordick, Registration Number PE- 6736, on 1/22/14 and the original document is stored at the North Dakota Department of Transportation

Work Zone Traffic Control

Williston Intersection US 2 & 18th St W & Bison Dr

Phase 2

STATE	PROJECT NO.	SECTION NO.	SHEET NO.
ND	SOIA-7-002(130)019	100	13

762 0420 Short Term 4IN Line-Type R
White Edge Line 37 LF

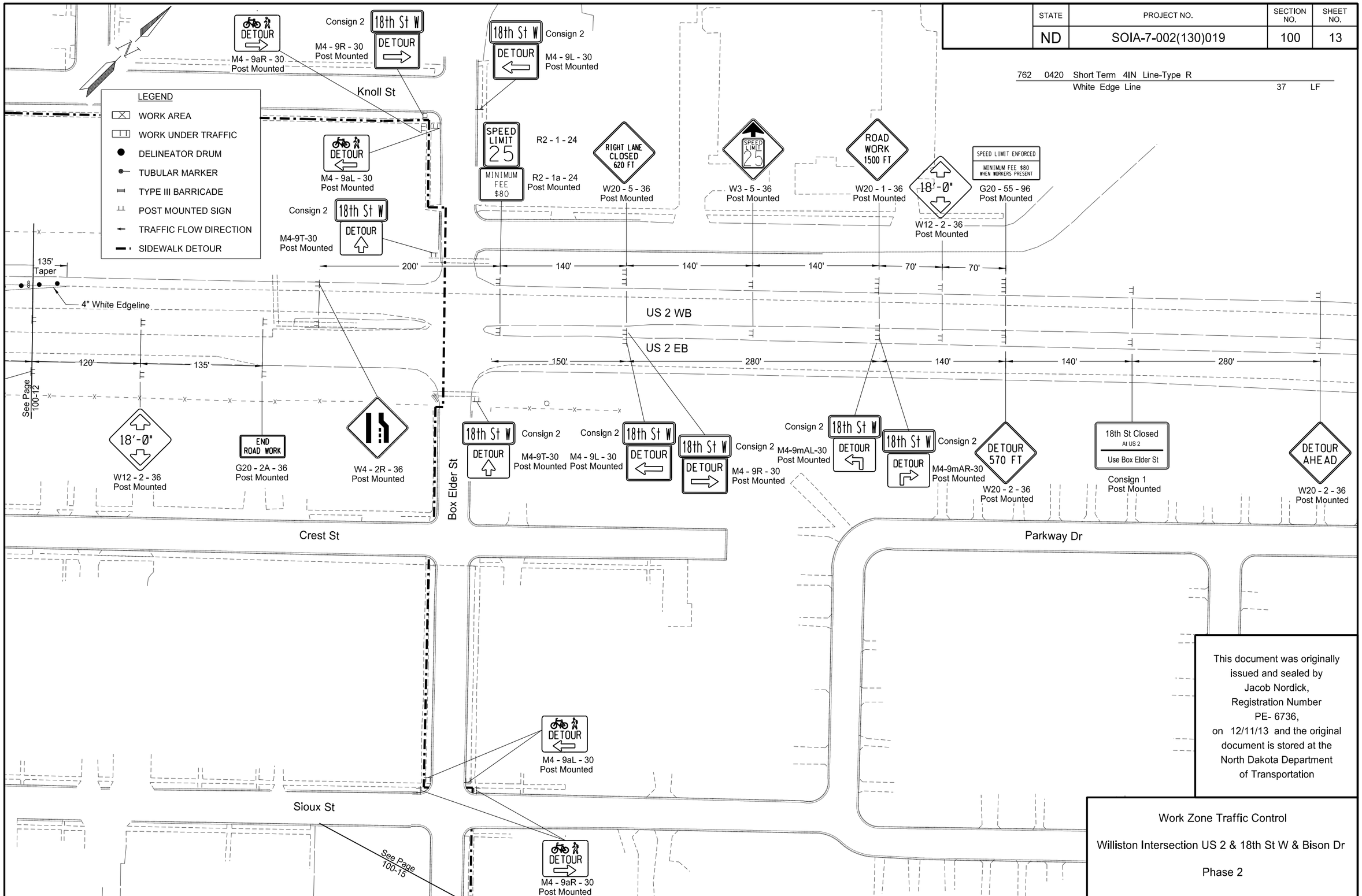

This document was originally issued and sealed by Jacob Nordick, Registration Number PE- 6736, on 12/11/13 and the original document is stored at the North Dakota Department of Transportation

Work Zone Traffic Control

Williston Intersection US 2 & 18th St W & Bison Dr

Phase 2

STATE	PROJECT NO.	SECTION NO.	SHEET NO.
ND	SOIA-7-002(130)019	100	14

LEGEND

- WORK AREA
- WORK UNDER TRAFFIC
- DELINEATOR DRUM
- TUBULAR MARKER
- TYPE III BARRICADE
- POST MOUNTED SIGN
- TRAFFIC FLOW DIRECTION
- SIDEWALK DETOUR

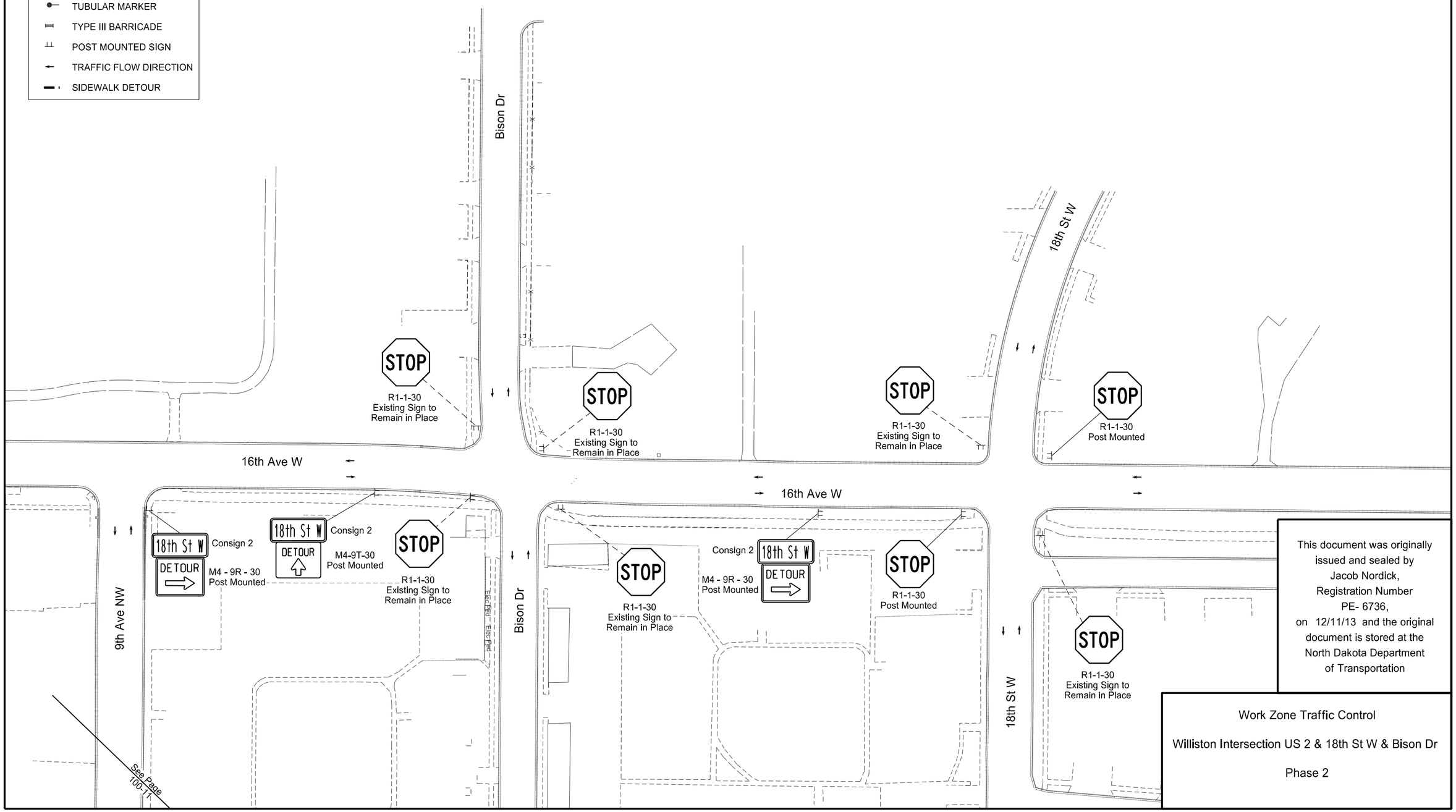

This document was originally issued and sealed by Jacob Nordick, Registration Number PE- 6736, on 12/11/13 and the original document is stored at the North Dakota Department of Transportation

Work Zone Traffic Control

Williston Intersection US 2 & 18th St W & Bison Dr

Phase 2

STATE	PROJECT NO.	SECTION NO.	SHEET NO.
ND	SOIA-7-002(130)019	100	15

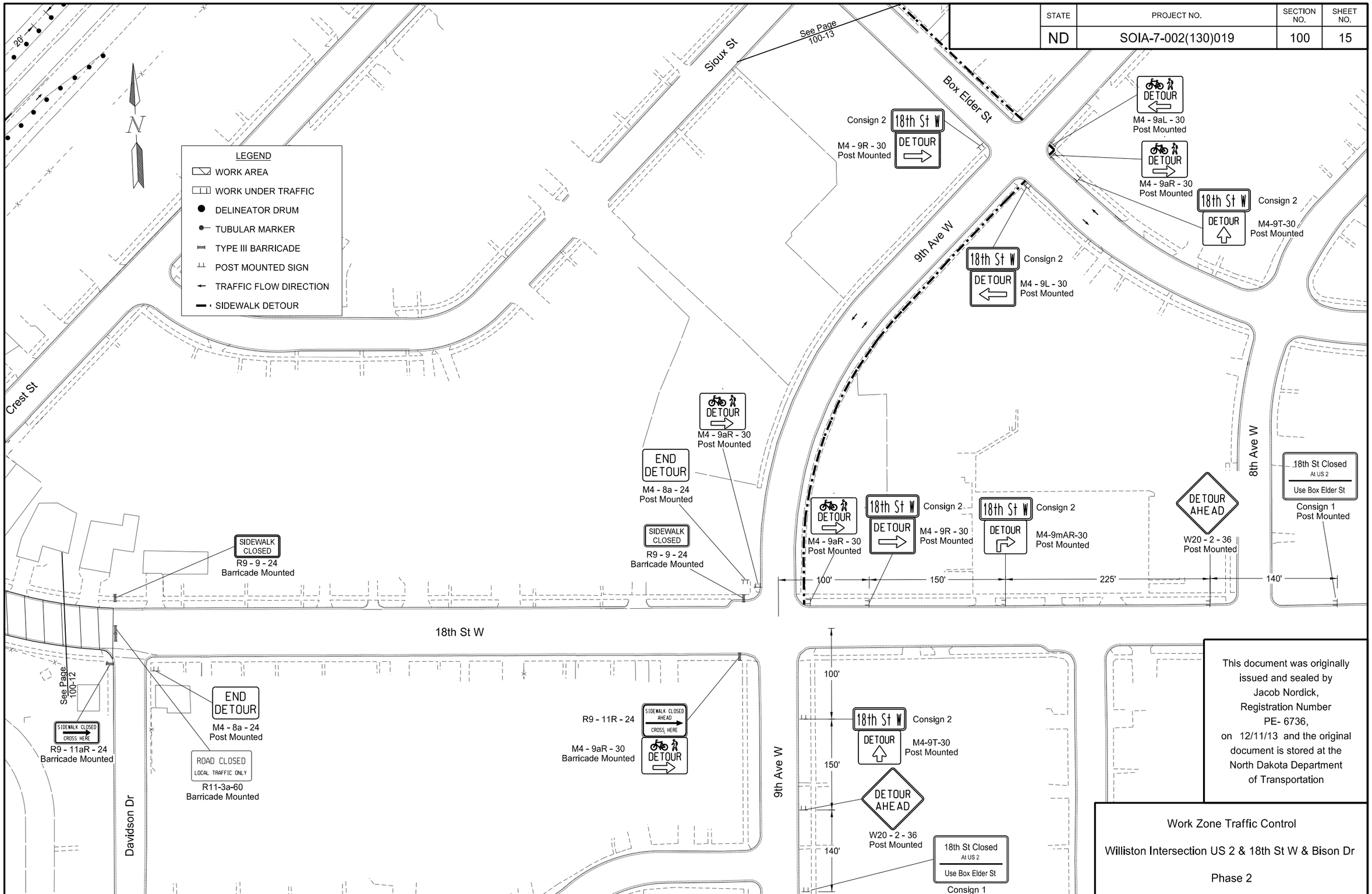

This document was originally issued and sealed by Jacob Nordick, Registration Number PE- 6736, on 12/11/13 and the original document is stored at the North Dakota Department of Transportation

Work Zone Traffic Control

Williston Intersection US 2 & 18th St W & Bison Dr

Phase 2

STATE	PROJECT NO.	SECTION NO.	SHEET NO.
ND	SOIA-7-002(130)019	100	16

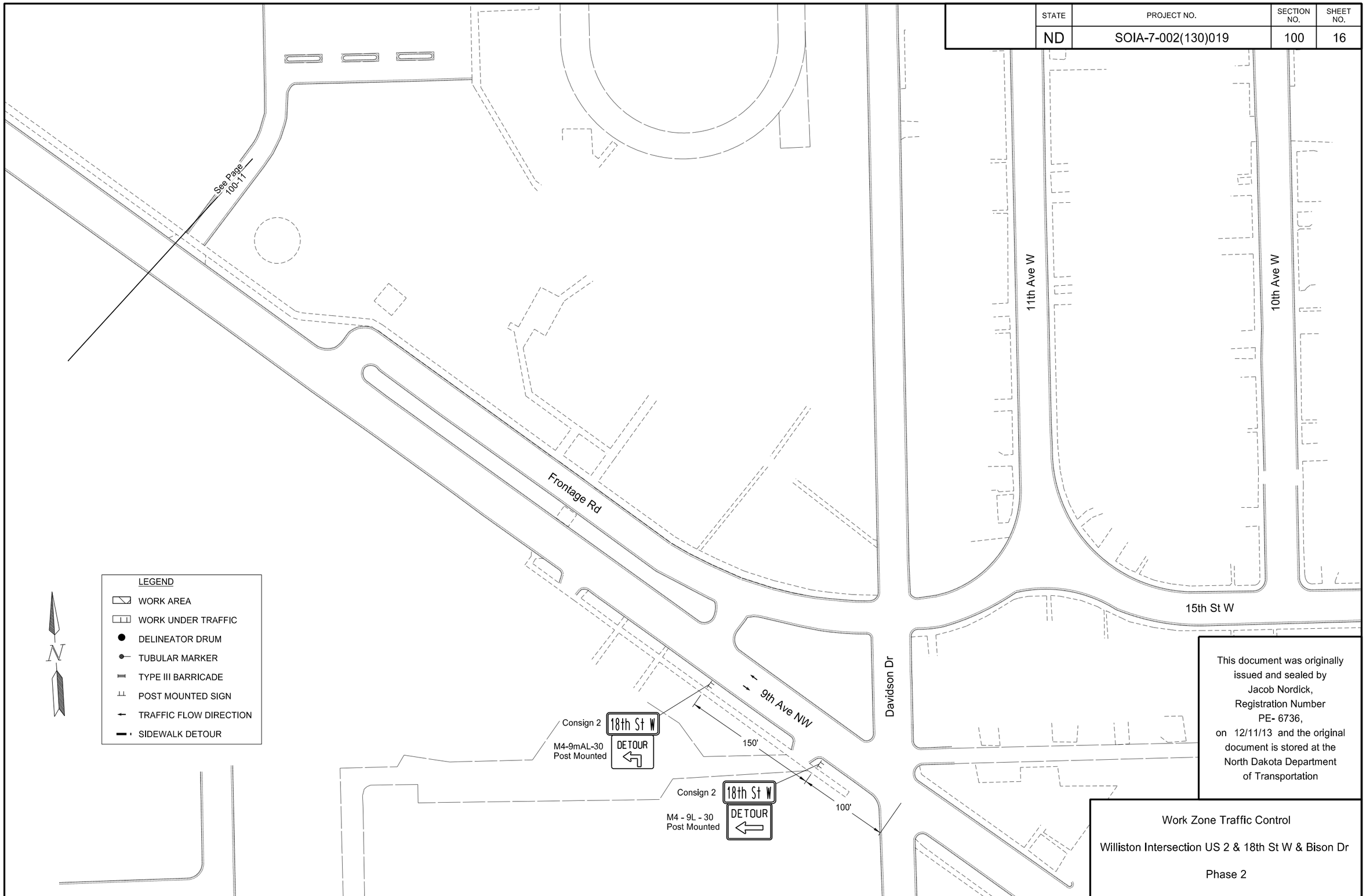

This document was originally issued and sealed by Jacob Nordick, Registration Number PE- 6736, on 12/11/13 and the original document is stored at the North Dakota Department of Transportation

Work Zone Traffic Control

Williston Intersection US 2 & 18th St W & Bison Dr

Phase 2

STATE	PROJECT NO.	SECTION NO.	SHEET NO.
ND	SOIA-7-002(130)019	100	17

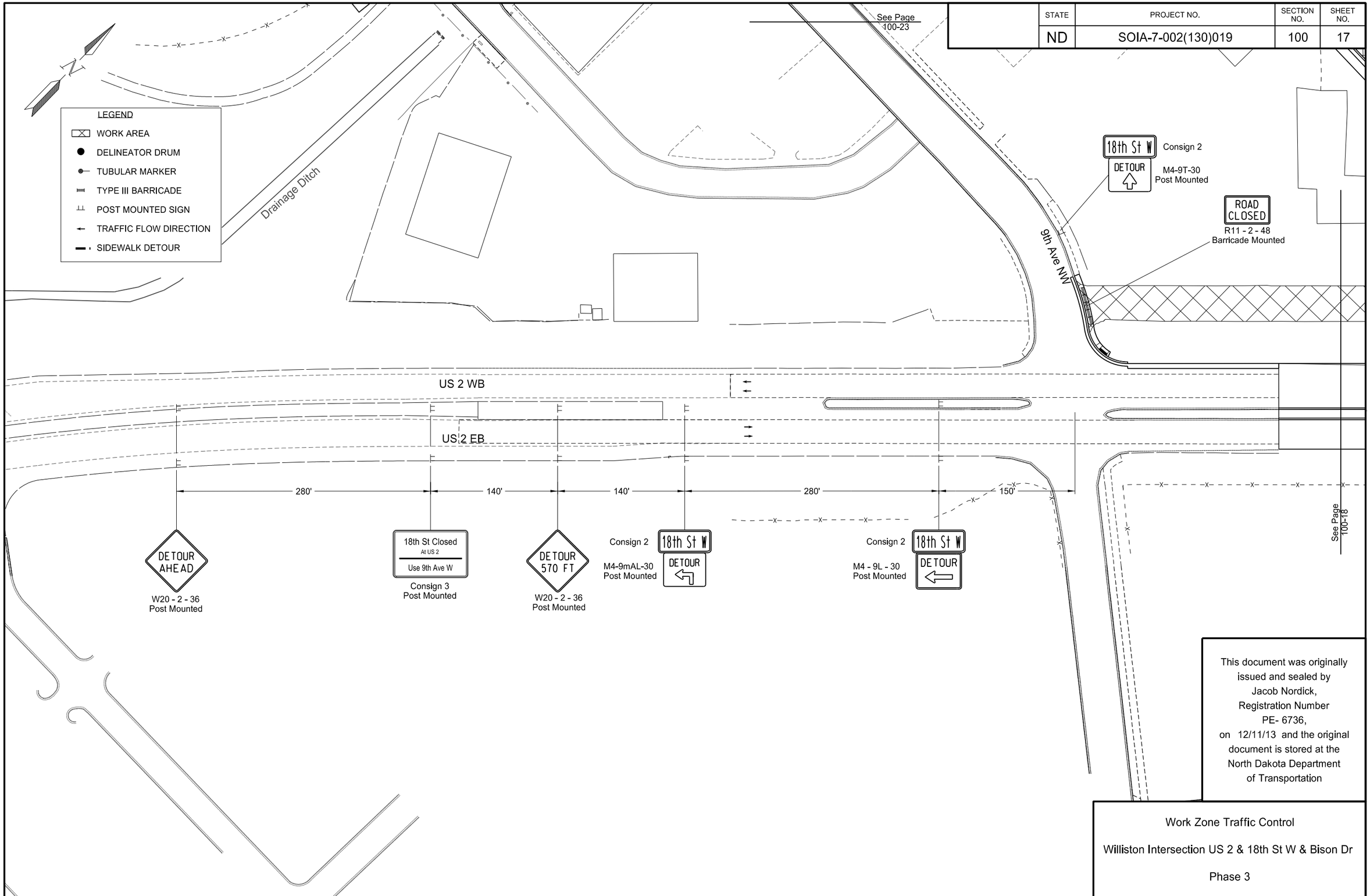

This document was originally issued and sealed by Jacob Nordick, Registration Number PE- 6736, on 12/11/13 and the original document is stored at the North Dakota Department of Transportation

Work Zone Traffic Control

Williston Intersection US 2 & 18th St W & Bison Dr

Phase 3

STATE	PROJECT NO.	SECTION NO.	SHEET NO.
ND	SOIA-7-002(130)019	100	18

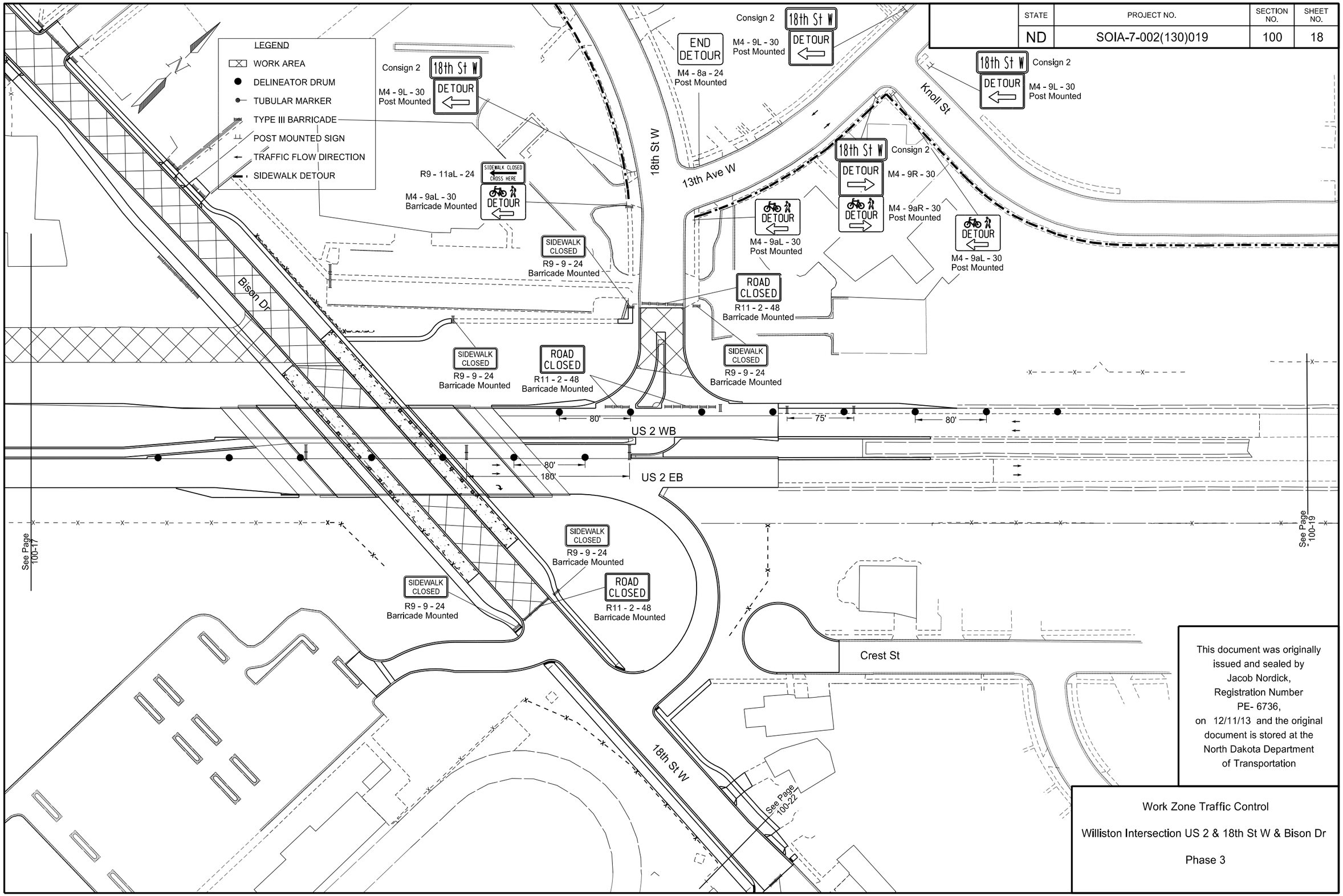

This document was originally issued and sealed by Jacob Nordick, Registration Number PE- 6736, on 12/11/13 and the original document is stored at the North Dakota Department of Transportation

Work Zone Traffic Control

Williston Intersection US 2 & 18th St W & Bison Dr

Phase 3

STATE	PROJECT NO.	SECTION NO.	SHEET NO.
ND	SOIA-7-002(130)019	100	19

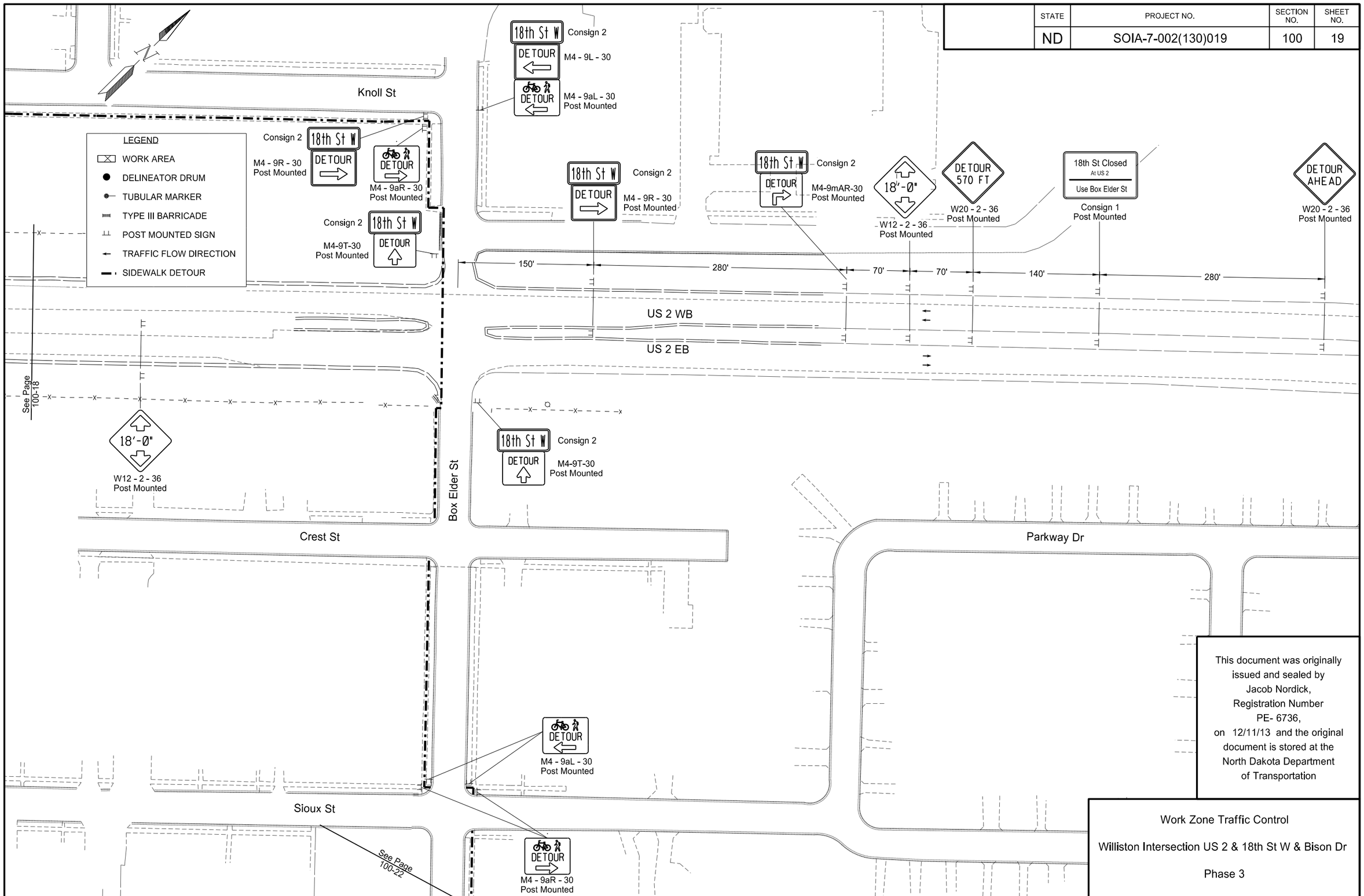

This document was originally issued and sealed by Jacob Nordick, Registration Number PE- 6736, on 12/11/13 and the original document is stored at the North Dakota Department of Transportation

Work Zone Traffic Control

Williston Intersection US 2 & 18th St W & Bison Dr

Phase 3

STATE	PROJECT NO.	SECTION NO.	SHEET NO.
ND	SOIA-7-002(130)019	100	20

LEGEND

- WORK AREA
- DELINEATOR DRUM
- TUBULAR MARKER
- TYPE III BARRICADE
- POST MOUNTED SIGN
- TRAFFIC FLOW DIRECTION
- SIDEWALK DETOUR

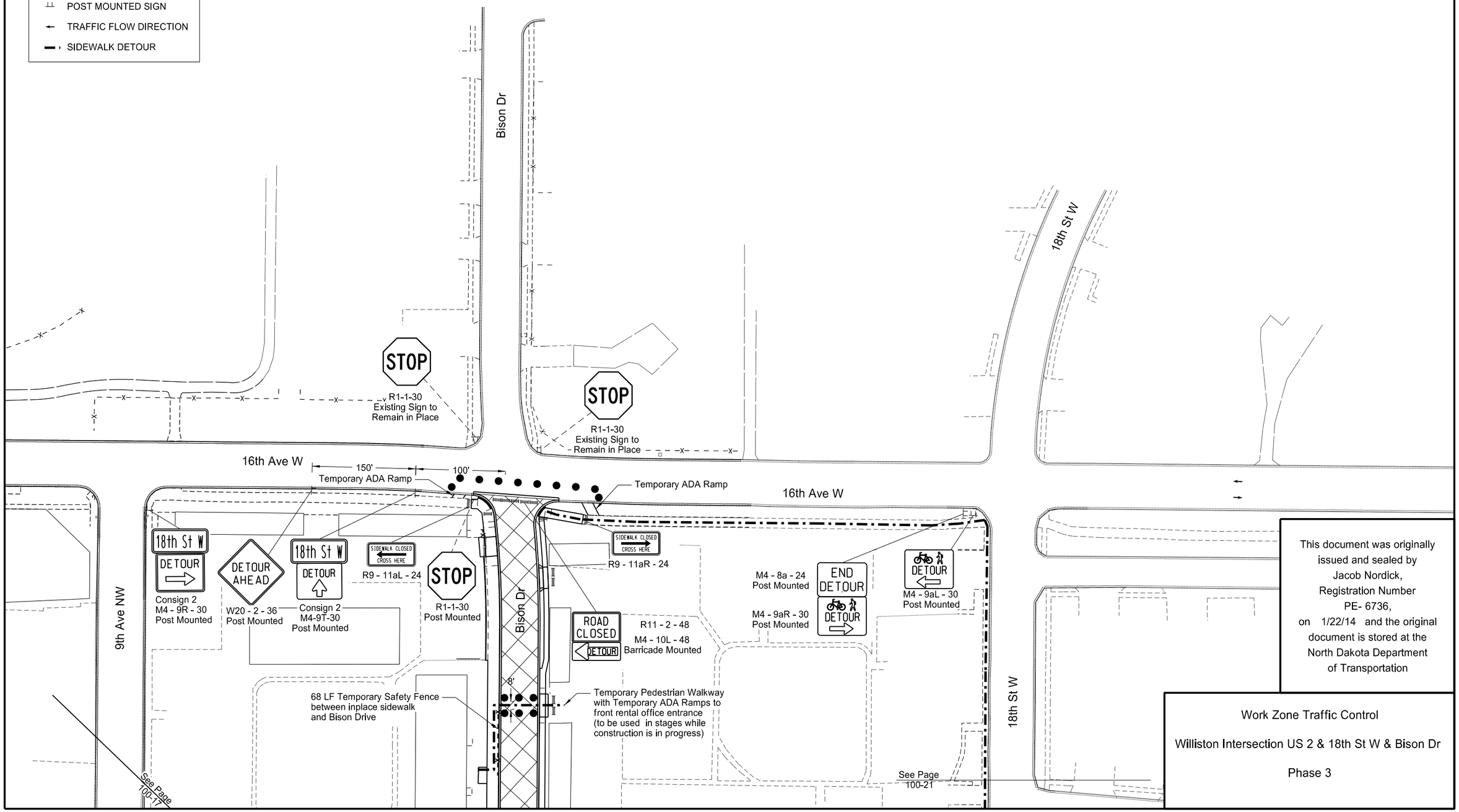

This document was originally issued and sealed by Jacob Nordick, Registration Number PE- 6736, on 1/22/14 and the original document is stored at the North Dakota Department of Transportation

Work Zone Traffic Control

Williston Intersection US 2 & 18th St W & Bison Dr

Phase 3

STATE	PROJECT NO.	SECTION NO.	SHEET NO.
ND	SOIA-7-002(130)019	100	21

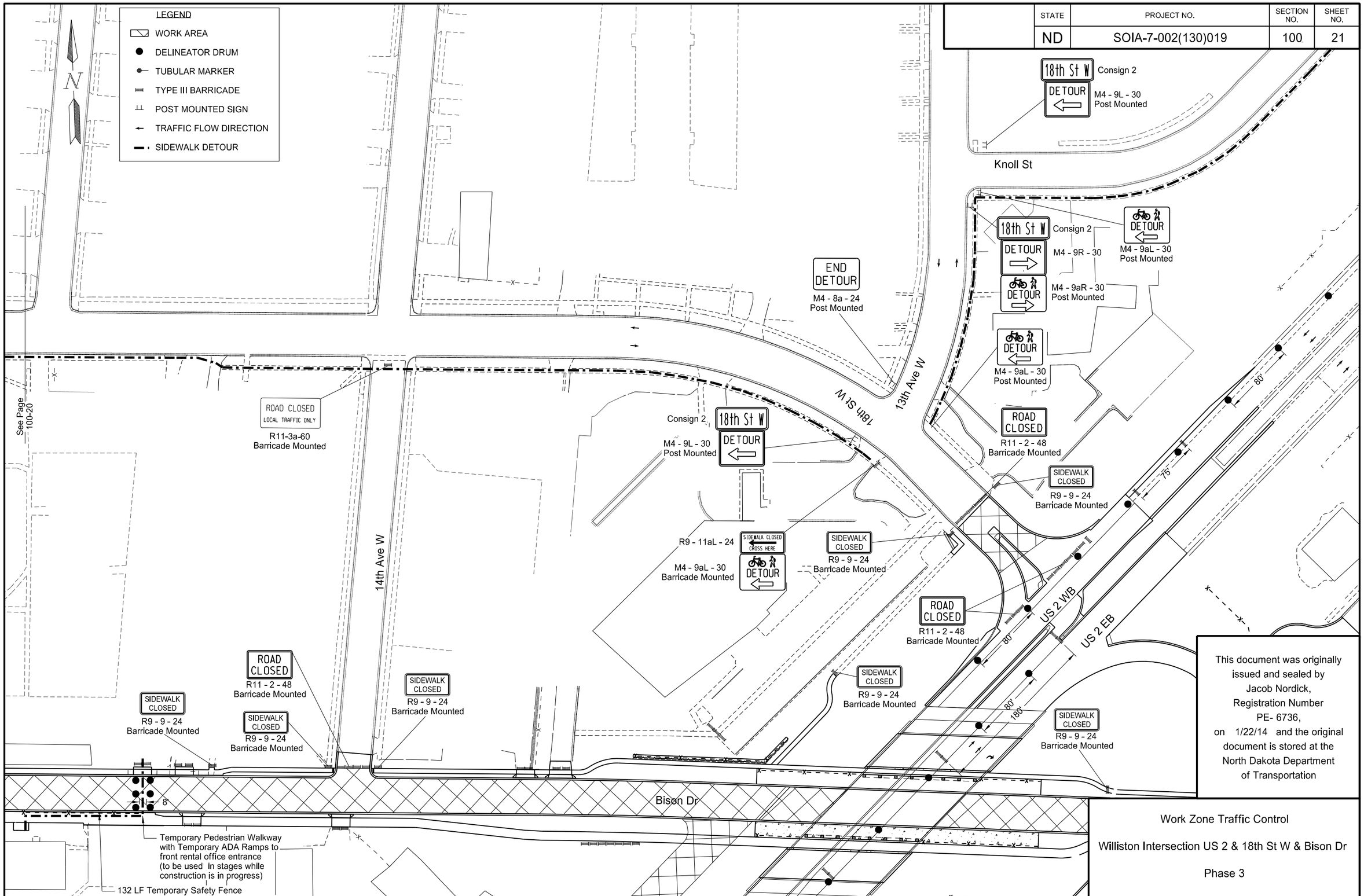

This document was originally issued and sealed by Jacob Nordick, Registration Number PE- 6736, on 1/22/14 and the original document is stored at the North Dakota Department of Transportation

Work Zone Traffic Control

Williston Intersection US 2 & 18th St W & Bison Dr

Phase 3

STATE	PROJECT NO.	SECTION NO.	SHEET NO.
ND	SOIA-7-002(130)019	100	22

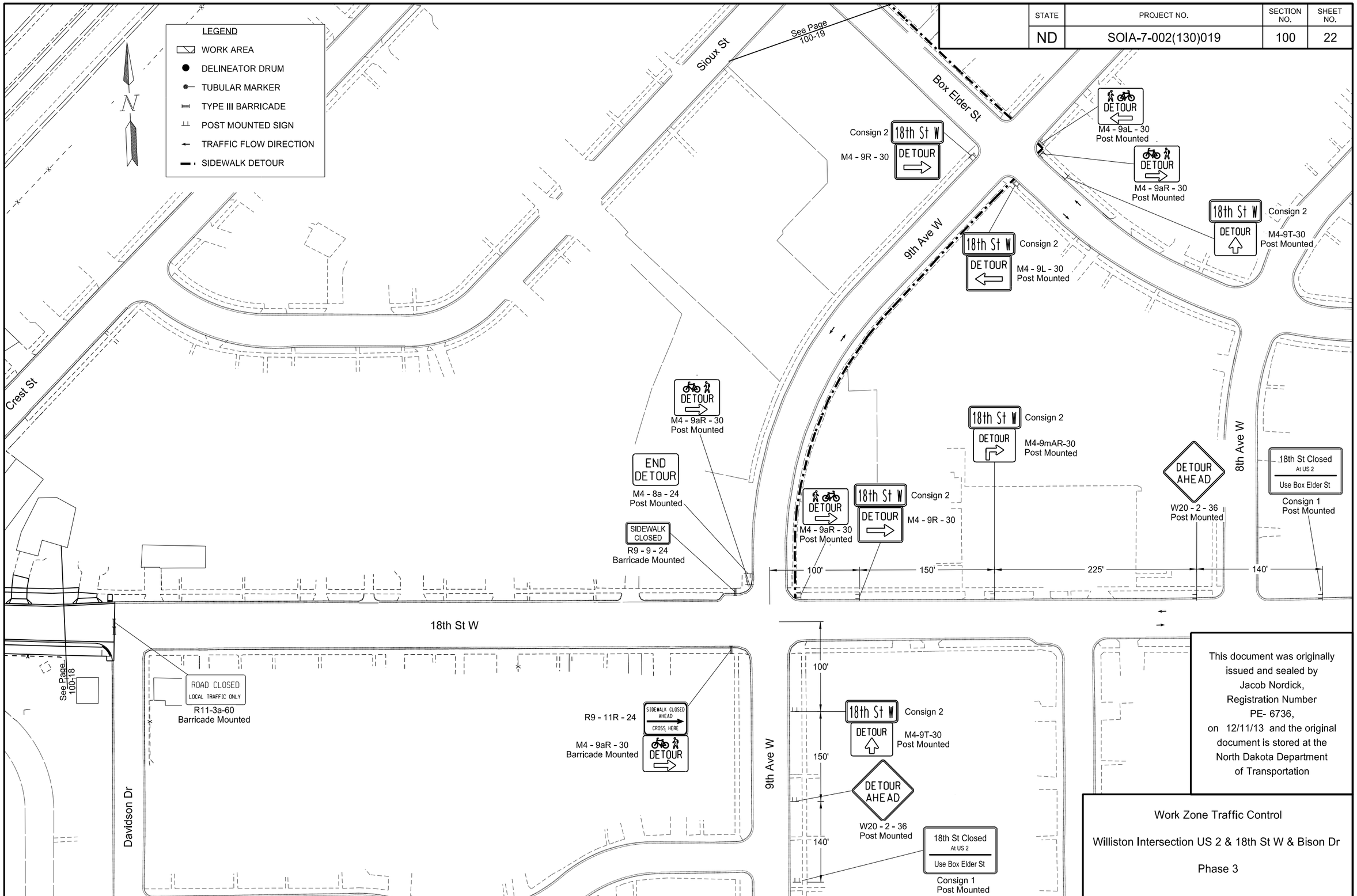

This document was originally issued and sealed by Jacob Nordick, Registration Number PE- 6736, on 12/11/13 and the original document is stored at the North Dakota Department of Transportation

Work Zone Traffic Control

Williston Intersection US 2 & 18th St W & Bison Dr

Phase 3

STATE	PROJECT NO.	SECTION NO.	SHEET NO.
ND	SOIA-7-002(130)019	100	23

SIGN NUMBER	Consign 1
WIDTH x HEIGHT	8'-0" x 4'-0"
BORDER WIDTH	1.25" (inset 0.75")
CORNER RADIUS	6"
MOUNTING	Ground
BACKGROUND	TYPE: 3A Reflective
	COLOR: Orange
LEGEND/BORDER	TYPE: 3A Reflective
	COLOR: Black

SYMBOL	X	Y	WID	HT	ANGLE

AREA: 9479.7 Sq.Ft.

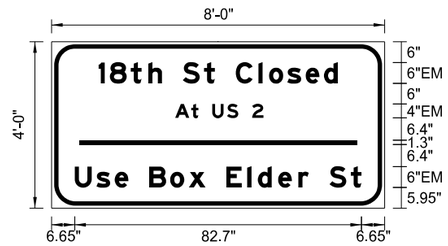

Dimensions are in inches.tenths

Letter locations are panel edge to lower left corner

PANEL STYLE: ND_Const_Conv_Detour.ssl

LETTER POSITION (X)																				LENGTH	SIZE	SERIES
1	8	t	h		S	t		C	l	o	s	e	d							68.9	6/4.5	EM 2000
223.5	226.7	232.8	237.8	241.8	247.8	253.9	257	263	269.6	272.6	277.9	283.2	288.5									
A	t		U	S		2														25.4	4/3	EM 2000
245.6	250.2	252.3	256.3	260.5	263.7	267.7																
U	s	e		B	o	x		E	l	d	e	r		S	t					82.7	6/4.5	EM 2000
216.6	222.8	228.1	232.1	238.1	244.1	249.5	254.3	260.3	266.3	269.4	275.2	281	284	290	296.2							
1	8	t	h		S	t		W												46	6/4.5	EM 2000
551.9	555.1	561.2	566.3	570.2	576.3	582.4	585.5	591.5														

SIGN NUMBER	Consign 2
WIDTH x HEIGHT	5'-0" x 1'-6"
BORDER WIDTH	0" (inset 0.75")
CORNER RADIUS	3"
MOUNTING	Ground
BACKGROUND	TYPE: 3A Reflective
	COLOR: Orange
LEGEND/BORDER	TYPE: 3A Reflective
	COLOR: Black

SYMBOL	X	Y	WID	HT	ANGLE

AREA: 7.5 Sq.Ft.

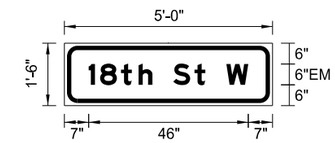

Dimensions are in inches.tenths

Letter locations are panel edge to lower left corner

PANEL STYLEND_Const_Conv_Detour.ssl

LETTER POSITION (X)																				LENGTH	SIZE	SERIES
1	8	t	h		S	t		W												46	6/4.5	EM 2000
7	10.3	16.3	21.4	25.3	31.4	37.5	40.6	46.6														

SIGN NUMBER	Consign 3
WIDTH x HEIGHT	7'-0" x 4'-0"
BORDER WIDTH	1.25" (inset 0.75")
CORNER RADIUS	6"
MOUNTING	Ground
BACKGROUND	TYPE: 3A Reflective
	COLOR: Orange
LEGEND/BORDER	TYPE: 3A Reflective
	COLOR: Black

SYMBOL	X	Y	WID	HT	ANGLE

AREA: 9475.7 Sq.Ft.

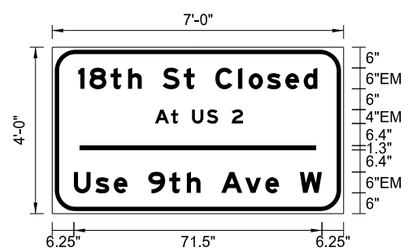

Dimensions are in inches.tenths

Letter locations are panel edge to lower left corner

PANEL STYLE: ND_Const_Conv_Detour.ssl

LETTER POSITION (X)																				LENGTH	SIZE	SERIES
1	8	t	h		S	t		C	l	o	s	e	d							68.9	6/4.5	EM 2000
223.5	226.7	232.8	237.8	241.8	247.8	253.9	257	263	269.6	272.6	277.9	283.2	288.5									
A	t		U	S		2														25.4	4/3	EM 2000
245.6	250.2	252.3	256.3	260.5	263.7	267.7																
U	s	e		B	o	x		E	l	d	e	r		S	t					82.7	6/4.5	EM 2000
216.6	222.8	228.1	232.1	238.1	244.1	249.5	254.3	260.3	266.3	269.4	275.2	281	284	290	296.2							
1	8	t	h		S	t		W												46	6/4.5	EM 2000
551.9	555.1	561.2	566.3	570.2	576.3	582.4	585.5	591.5														
1	8	t	h		S	t		C	l	o	s	e	d							68.9	6/4.5	EM 2000
223.4	226.6	232.7	237.7	241.7	247.7	253.8	256.9	262.9	269.5	272.5	277.8	283.1	288.4									
A	t		U	S		2														25.4	4/3	EM 2000
245.5	250.1	252.2	256.2	260.4	263.7	267.7																
U	s	e		9	t	h		A	v	e		W								71.5	6/4.5	EM 2000
222.1	228.3	233.6	237.6	243.6	249.6	254.7	258.6	264.6	271.5	277.3	281.3	287.3										

This document was originally issued and sealed by Jacob Nordick, Registration Number PE- 6736, on 12/11/13 and the original document is stored at the North Dakota Department of Transportation

Work Zone Traffic Control

Williston Intersection US 2 & 18th St W & Bison Dr

Construction Sign Detail

STATE	PROJECT NO.	SECTION NO.	SHEET NO.
ND	SOIA-7-002(130)019	100	24

Legend

(1) Signal Head Number

[17] Cable Run Number

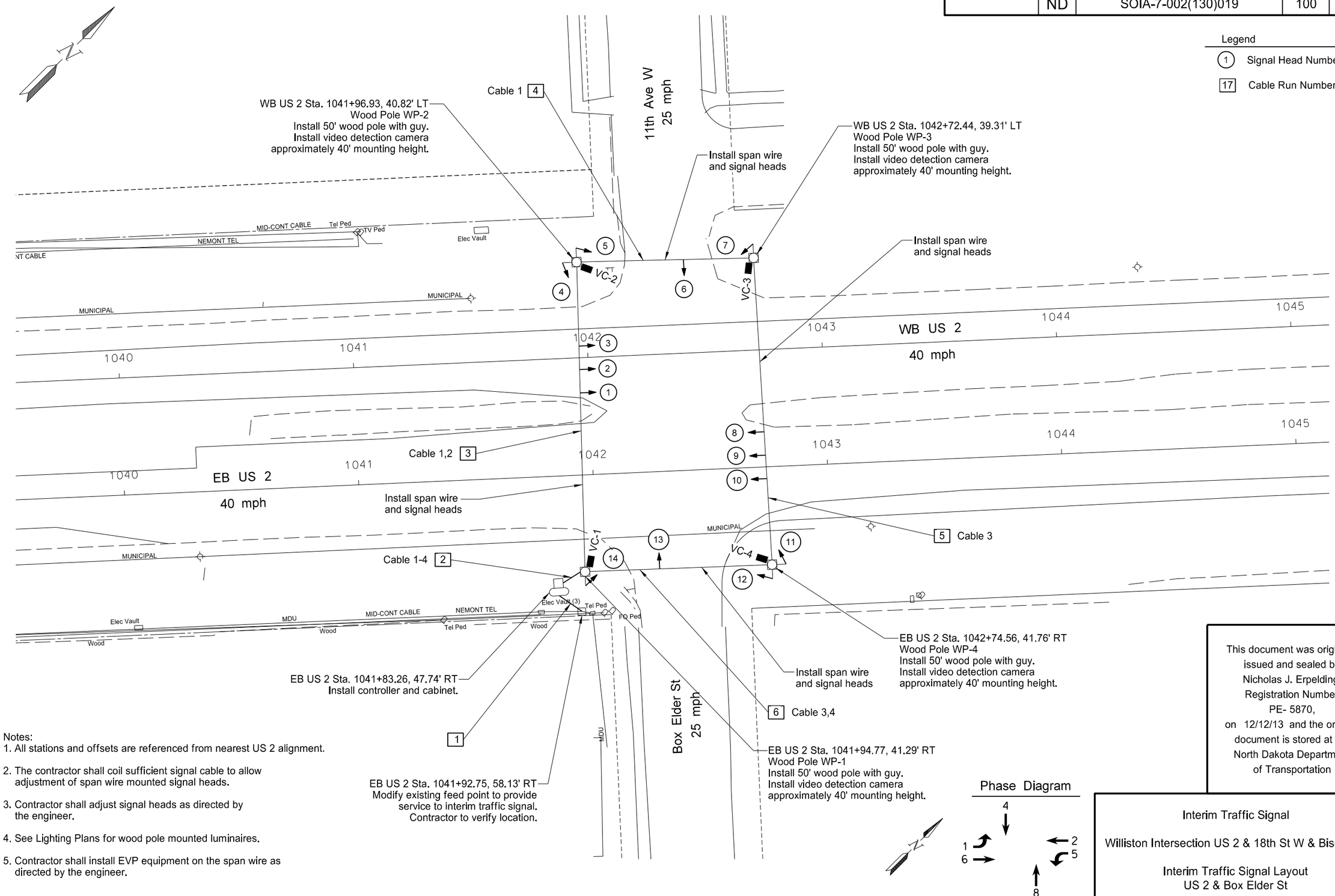

Notes:

1. All stations and offsets are referenced from nearest US 2 alignment.
2. The contractor shall coil sufficient signal cable to allow adjustment of span wire mounted signal heads.
3. Contractor shall adjust signal heads as directed by the engineer.
4. See Lighting Plans for wood pole mounted luminaires.
5. Contractor shall install EVP equipment on the span wire as directed by the engineer.

Phase Diagram

This document was originally issued and sealed by Nicholas J. Erpelding, Registration Number PE- 5870, on 12/12/13 and the original document is stored at the North Dakota Department of Transportation

Interim Traffic Signal

Williston Intersection US 2 & 18th St W & Bison Dr

Interim Traffic Signal Layout
US 2 & Box Elder St

STATE	PROJECT NO.	SECTION NO.	SHEET NO.
ND	SOIA-7-002(130)019	100	25

Note:
All stations and offsets are referenced from nearest US 2 alignment.

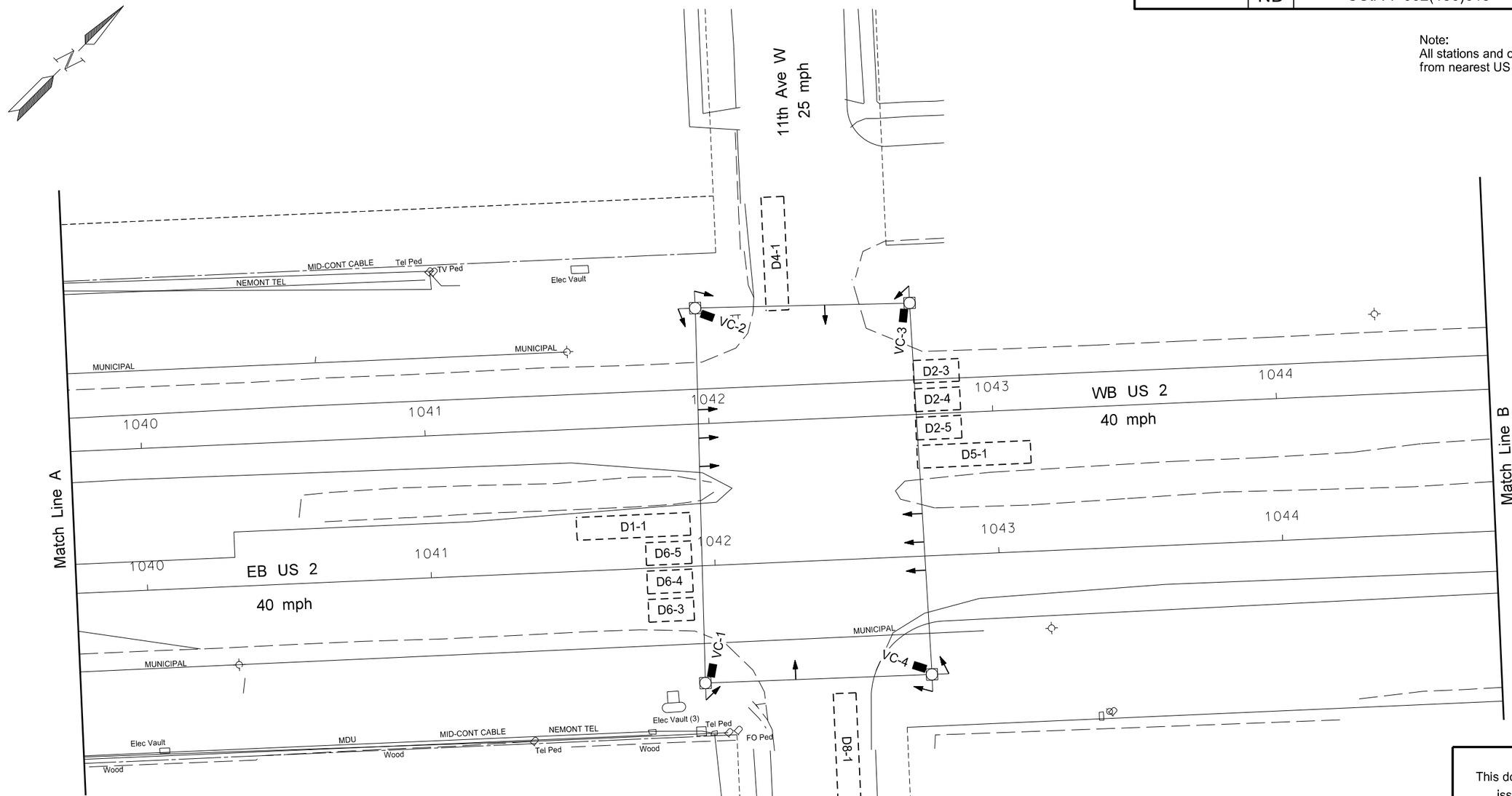

Video Detector Zone Schedule

Zone	Video Camera	Phase	Size (ft)	Type	Approximate Distance from Stop Bar to Detection Zone
D1-1	VC-4	1	1-6x50	Presence	0'
D2-1,D2-2	VC-2	2	1-6x6	Passage	300'
D2-3,D2-4,D2-5	VC-2	2	1-6x6	Calling	0'
D4-1	VC-1	4	1-6x50	Presence	0'
D5-1	VC-2	5	1-6x50	Presence	0'
D6-1,D6-2	VC-4	6	1-6x6	Passage	300'
D6-3,D6-4,D6-5	VC-4	6	1-6x6	Calling	0'
D8-1	VC-3	8	1-6x50	Presence	0'

Note: Counting enabled for all detectors.

Phase Diagram

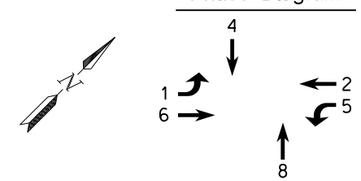

This document was originally issued and sealed by Nicholas J. Erpelding, Registration Number PE- 5870, on 12/12/13 and the original document is stored at the North Dakota Department of Transportation

Interim Traffic Signal

Williston Intersection US 2 & 18th St W & Bison Dr

Interim Traffic Signal Layout
US 2 & Box Elder St

STATE	PROJECT NO.	SECTION NO.	SHEET NO.
ND	SOIA-7-002(130)019	100	26

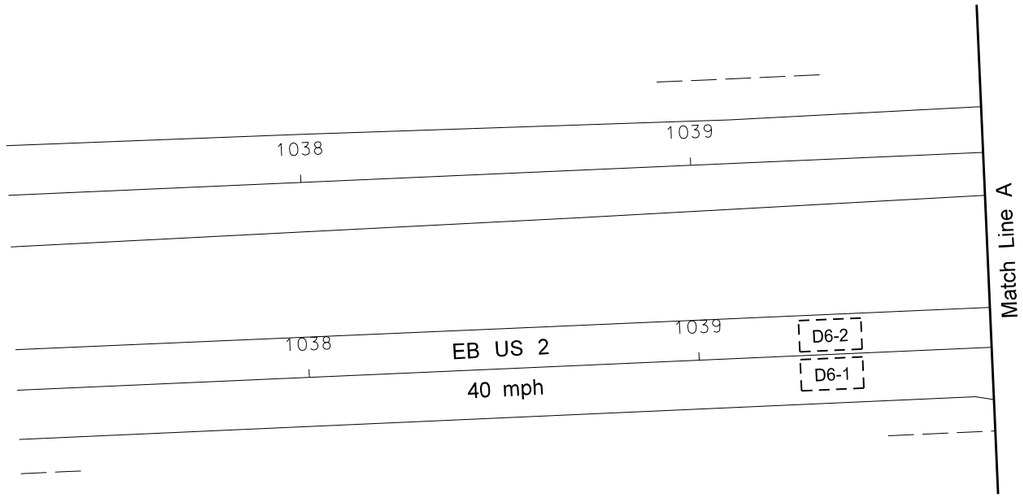

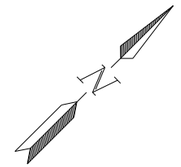

Note:
All stations and offsets are referenced from nearest US 2 alignment.

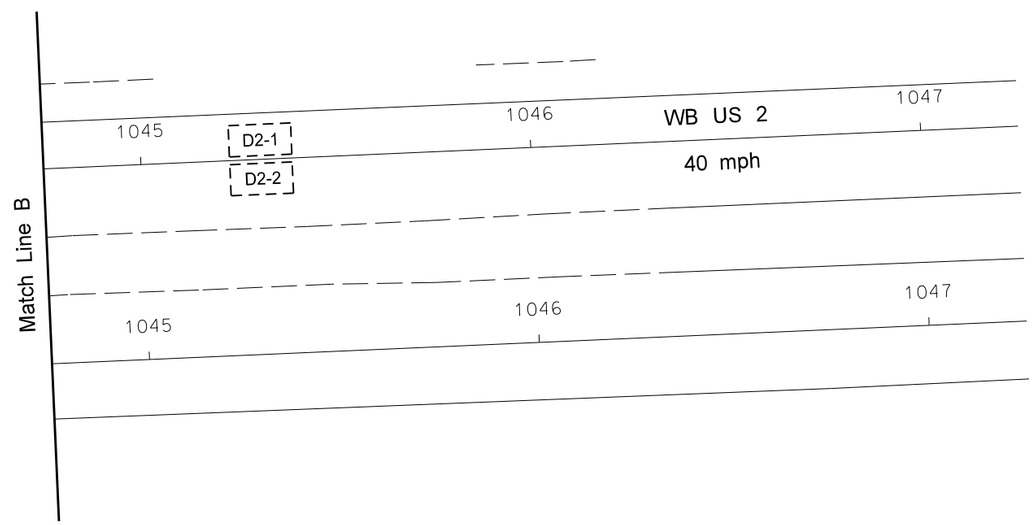

Video Detector Zone Schedule

Zone	Video Camera	Phase	Size (ft)	Type	Approximate Distance from Stop Bar to Detection Zone
D1-1	VC-4	1	1-6x50	Presence	0'
D2-1,D2-2	VC-2	2	1-6x6	Passage	300'
D2-3,D2-4,D2-5	VC-2	2	1-6x6	Calling	0'
D4-1	VC-1	4	1-6x50	Presence	0'
D5-1	VC-2	5	1-6x50	Presence	0'
D6-1,D6-2	VC-4	6	1-6x6	Passage	300'
D6-3,D6-4,D6-5	VC-4	6	1-6x6	Calling	0'
D8-1	VC-3	8	1-6x50	Presence	0'

Note: Counting enabled for all detectors.

Phase Diagram

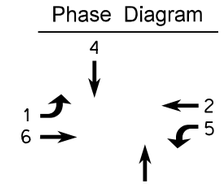

This document was originally issued and sealed by Nicholas J. Erpelding, Registration Number PE- 5870, on 12/12/13 and the original document is stored at the North Dakota Department of Transportation

Interim Traffic Signal

Williston Intersection US 2 & 18th St W & Bison Dr

Interim Traffic Signal Layout
US 2 & Box Elder St

Run	Station	Location	Conduit Run		Cable Run			
			Length	Size	Code	QTY	Length	Type
1	1041+92.75 to 1041+83.26	Feed Point 1 to Signal Controller 1	20	2"	E	1	30	#6 U.S.E.
2	1041+83.26 to 1041+94.77	Signal Controller 1 to Wood Pole WP-1	45	2"	A	4	220	No. 12 AWG 2 Conductor Cable
					B	4	220	Emergency Detector Cable
					C	2	110	No. 12 AWG 7 Conductor Cable
					C	2	110	No. 12 AWG 12 Conductor Cable
					D	4	220	Video Detector Cable
3	1041+94.77 to 1041+96.93	Wood Pole WP-1 to Wood Pole WP-2	135	Span Wire	A	2	282	No. 12 AWG 2 Conductor Cable
					B	2	282	Emergency Detector Cable
					C	1	146	No. 12 AWG 7 Conductor Cable
					C	1	146	No. 12 AWG 12 Conductor Cable
					D	1	146	Video Detector Cable
4	1041+96.93 to 1042+72.44	Wood Pole WP-2 to Wood Pole WP-3	75	Span Wire	A	1	50	No. 12 AWG 2 Conductor Cable
					B	1	50	Emergency Detector Cable
					C	1	50	No. 12 AWG 7 Conductor Cable
5	1042+74.56 to 1042+72.44	Wood Pole WP-4 to Wood Pole WP-3	135	Span Wire	A	1	50	No. 12 AWG 2 Conductor Cable
					B	1	50	Emergency Detector Cable
					C	1	145	No. 12 AWG 12 Conductor Cable
					D	1	145	Video Detector Cable
6	1041+94.77 to 1042+74.56	Wood Pole WP-1 to Wood Pole WP-4	80	Span Wire	A	2	180	No. 12 AWG 2 Conductor Cable
					B	2	180	Emergency Detector Cable
					C	1	90	No. 12 AWG 7 Conductor Cable
					C	1	90	No. 12 AWG 12 Conductor Cable
					D	2	180	Video Detector Cable

Cable Code

A = Emergency Vehicle Indicator Lamp
B = Emergency Vehicle Detector Cable
C = Signal Control Cable
D = Video Detection Cable
E = Power Cable

Notes:
1) Conduit run length for Run 2 includes distance from controller to wood pole (15') and ground to span wire mounting height (30').
2) Where applicable, cable run lengths represent distance from wood pole to traffic signal device.

This document was originally issued and sealed by Nicholas J. Erpelding, Registration Number PE- 5870, on 12/12/13 and the original document is stored at the North Dakota Department of Transportation

Interim Traffic Signal

Williston Intersection US 2 & 18th St W & Bison Dr

Conduit and Conductors
US 2 & Box Elder St

STATE	PROJECT NO.	SECTION NO.	SHEET NO.
ND	SOIA-7-002(130)019	100	28

Head #	Phase 1								Phase 2								Phase 3								Phase 4							
	R/W	Clear to Phase							R/W	Clear to Phase							R/W	Clear to Phase							R/W	Clear to Phase						
		2	3	4	5	6	7	8		3	4	5	6	7	8	1		4	5	6	7	8	1	2		5	6	7	8	1	2	3
1																																
2									G		Y	(A)	(A)		Y	Y																
3									G		Y	(A)	(A)		Y	Y																
4																																
5									G		Y	(A)	(A)		Y	Y																
6																																
7	GL	YL		YL	(A)	(A)		YL																								
8	GL	YL		YL	(A)	(A)		YL																								
9																																
10																																
11																									G	Y	Y		(A)	Y	Y	
12																																
13																									G	Y	Y		(A)	Y	Y	
14																																

Head #	Phase 5								Phase 6								Phase 7								Phase 8							
	R/W	Clear to Phase							R/W	Clear to Phase							R/W	Clear to Phase							R/W	Clear to Phase						
		6	7	8	1	2	3	4		7	8	1	2	3	4	5		8	1	2	3	4	5	6		1	2	3	4	5	6	7
1	GL	YL		YL	(A)	(A)		YL																								
2																																
3																																
4																									G	Y	Y		(A)	Y	Y	
5																																
6																									G	Y	Y		(A)	Y	Y	
7																																
8																																
9									G		Y	(A)	(A)		Y	Y																
10									G		Y	(A)	(A)		Y	Y																
11																																
12									G		Y	(A)	(A)		Y	Y																
13																																
14	GL	YL		YL	(A)	(A)		YL																								

Blank Squares Denote Red Indication
G = Green Ball Indication
Y = Yellow Ball Indication
GL = Green Left Arrow Indication
YL = Yellow Left Arrow Indication
(A) = Continue to Display Right of Way Indication.
When one phase is on alone any nonconflicting phase may start timing concurrently without a clearance interval (See Chart A).

Chart A		
On Phase	Non-Conflicting Phase Allowed to Time Concurrently	Flashing Yellow Arrow Phase Allowed to Time Concurrently
1	5 or 6	
2	5 or 6	1
3		
4	8	
5	1 or 2	
6	1 or 2	5
7		
8	4	

Emergency Vehicle Preemption Phasing			
Eastbound	Westbound	Northbound	Southbound
Phase 6	Phase 2	Phase 8	Phase 4

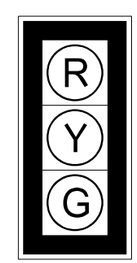

(12" Lenses)
Heads 2-6,9-13

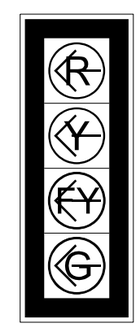

(12" Lenses)
Heads 1,7,8,14

This document was originally issued and sealed by Nicholas J. Erpelding, Registration Number PE- 5870, on 12/12/13 and the original document is stored at the North Dakota Department of Transportation

Notes:

All Heads Shall use LED

5" Louvered Back Plate with Type XI Yellow Reflective Border (typ.) on all heads

Left turn phases 1 and 5 may operate as leading or lagging phases.

Interim Traffic Signal

Williston Intersection US 2 & 18th St W & Bison Dr

Phasing
US 2 & Box Elder St

STATE	PROJECT NO.	SECTION NO.	SHEET NO.
ND	SOIA-7-002(130)019	100	29

US 2 & Box Elder St Interim Signal

Conductor			Cable 1 (7 No.12 AWG)			Cable 2 (12 No.12 AWG)			Cable 3 (12 No.12 AWG)			Cable 4 (7 No.12 AWG)		
Run	Base	Tracer	Head	Phase	Indication	Head	Phase	Indication	Head	Phase	Indication	Head	Phase	Indication
1	Black		4,6	Ø8	Green	2,3,5	Ø2	Green	9,10,12	Ø6	Green	11,13	Ø4	Green
2	White				Neutral			Neutral			Neutral			Neutral
3	Red		4,6	Ø8	Red	2,3,5	Ø2	Red	9,10,12	Ø6	Red	11,13	Ø4	Red
4	Green				Ground			Ground			Ground			Ground
5	Orange		4,6	Ø8	Yellow	2,3,5	Ø2	Yellow	9,10,12	Ø6	Yellow	11,13	Ø4	Yellow
6	Blue				Spare	1,14	Ø5	Green Left Arrow	7,8	Ø1	Green Left Arrow			Spare
7	White	Black			Spare	1,14	Ø5	Yellow Left Arrow	7,8	Ø1	Yellow Left Arrow			Spare
8	Red	Black				1,14	Ø5	Red Left Arrow	7,8	Ø1	Red Left Arrow			
9	Green	Black						Spare			Spare			
10	Orange	Black				1,14	Ø5	Flashing Yellow Arrow	7,8	Ø1	Flashing Yellow Arrow			
11	Blue	Black						Spare			Spare			
12	Black	White						Spare			Spare			

This document was originally issued and sealed by Nicholas J. Erpelding, Registration Number PE- 5870, on 1/23/14 and the original document is stored at the North Dakota Department of Transportation

Interim Traffic Signal

Williston Intersection US 2 & 18th St W & Bison Dr

Conductors
US 2 & Box Elder St

STATE	PROJECT NO.	SECTION NO.	SHEET NO.
ND	SOIA-7-002(130)019	100	30

		Phase 1	Phase 2	Phase 3	Phase 4	Phase 5	Phase 6	Phase 7	Phase 8
				Not Used				Not Used	
BASIC INTERVALS (OR FUNCTIONS)		EBL	WB		SB	WBL	EB		NB
Minimum Initial		5.0	15.0		10.0	5.0	15.0		10.0
Passage Time		2.5	4.5		3.5	2.5	4.5		3.5
Maximum (Maximum Green or Ext.Limit)		20.0	60.0		60.0	20.0	60.0		60.0
Yellow Change		3.0	4.0		3.0	3.0	4.0		3.0
Red Clearance		3.0	1.5		3.0	3.0	1.5		3.0
VOLUME DENSITY TIMING FUNCTIONS VARIABLE INITIAL TIMING OPTIONS									
Actuations Before Added Initial		-	-		-	-	-		-
Added Initial per Actuation		-	-		-	-	-		-
Maximum Initial		-	-		-	-	-		-
TIME WAITING GAP REDUCTION OPTIONS									
Time Before Reduction		-	20.0		-	-	20.0		-
Time to Reduce to Minimum Gap		-	20.0		-	-	20.0		-
Minimum Gap		-	2.0		-	-	2.0		-
Locking Memory									
Non-Locking Memory		X	X		X	X	X		X
Red Revert		2.0	2.0		2.0	2.0	2.0		2.0
Dual Entry			X		X		X		X
Phase recall (Y/N)		N	Y		N	N	Y		N
Flashing-Normal & Conflict Monitor		R	R		R	R	R		R
Start Up Phasing		R	G		R	R	G		R
Type of Detector	Presence	X			X	X			X
	Calling		X				X		
	Passage		X				X		
Emergency Vehicle Preemption			X		X		X		X

This document was originally issued and sealed by Nicholas J. Erpelding, Registration Number PE- 5870, on 12/12/13 and the original document is stored at the North Dakota Department of Transportation

Interim Traffic Signal

Williston Intersection US 2 & 18th St W & Bison Dr

Controller Settings
US 2 & Box Elder St

SPEC	CODE	ITEM DESCRIPTION	UNIT	TOTAL
		SPAN WIRE	LF	425
		50FT WOOD POLE WITH GUYS	EA	4
		1-WAY 3 SEC HEAD W/12IN LENS-SPAN WIRE MTD	EA	6
		1-WAY 3 SEC HEAD W/12IN LENS-WOOD POLE MTD	EA	4
		1-WAY 4 SEC HEAD W/12IN LENS-SPAN WIRE MTD	EA	2
		1-WAY 4 SEC HEAD W/12IN LENS-WOOD POLE MTD	EA	2
772	0240	2IN DIAMETER RIGID CONDUIT	LF	65
772	0375	EMERGENCY VEHICLE DETECTOR CABLE	LF	782
772	0400	NO12 AWG 2 CONDUCTOR CABLE	LF	782
772	0405	NO12 AWG 7 CONDUCTOR CABLE	LF	396
772	0410	NO12 AWG 12 CONDUCTOR CABLE	LF	491
772	2260	VIDEO DETECTION CABLE	LF	691
772	2264	VIDEO DETECTION-SINGLE CAMERA	EA	4
772	2265	VIDEO DETECTION SYSTEM	EA	1
772	2610	EMERGENCY VEHICLE PREEMPTION UNIT	EA	4
772	2700	TYPE A CONTROLLER & CABINET	EA	1
772	3135	REMOVE INTERIM TRAFFIC SIGNAL	EA	1
772	9270	MODIFY EXISTING FEED POINT	EA	1
772	2800	INTERIM TRAFFIC SIGNALS	EA	1
		Items shown above are for informational purposes; contractor shall provide all labor and equipment necessary for the signal system to be fully operational as shown in the Plans. Items shall be included in the corresponding price bid for "INTERIM TRAFFIC SIGNALS."		

This document was originally issued and sealed by Nicholas J. Erpelding, Registration Number PE- 5870, on 12/12/13 and the original document is stored at the North Dakota Department of Transportation

Interim Traffic Signal

Williston Intersection US 2 & 18th St W & Bison Dr

Estimated Signal Quantities
US 2 & Box Elder St

STATE	PROJECT NO.	SECTION NO.	SHEET NO.
ND	SOIA-7-002(130)019	110	1

Sta/RP	Sign No.	Assembly No.	Flat Sheet For Signs IV SF	Flat Sheet For Signs XI SF	Sign Support Length 1st LF	Sign Support Length 2nd LF	Sign Support Length 3rd LF	Sign Support Length 4th LF	Support Size	Max Post Len LF	Sleeve Length 1st LF	Sleeve Length 2nd LF	Sleeve Length 3rd LF	Sleeve Length 4th LF	Sleeve Size	Anchor EA	Anchor LF	Anchor Size	Reset Sign Panel EA	Reset Sign Support EA	Break-Away EA	Comments
0002+02 Lt		8		3.0	9.4				2 x 2 12 ga	14.6						1	4	2.25 x 2.25 12 ga				
0002+42 Lt		8		3.0	9.4				2 x 2 12 ga	14.6						1	4	2.25 x 2.25 12 ga				
0002+52 Rt		446		6.9	11.0				2.25 x 2.25 12 ga	11.7						1	4	2.5 x 2.5 12 ga				
0002+82 Lt		8		3.0	9.4				2 x 2 12 ga	14.6						1	4	2.25 x 2.25 12 ga				
0003+22 Lt		8		3.0	9.4				2 x 2 12 ga	14.6						1	4	2.25 x 2.25 12 ga				
0003+99 Lt		33		6.0	9.4				2.25 x 2.25 12 ga	11.7						1	4	2.5 x 2.5 12 ga				
0003+99 Rt		33		6.0	16.8				2.5 x 2.5 12 ga	20.7	4.8				2.25 x 2.25 12 ga	1	4	3 x 3 7 ga			1	
0004+55 Rt	SA C			12.3	10.9				2.25 x 2.25 12 ga	12.7						1	4	2.5 x 2.5 12 ga				
0004+60 Rt	SA B			25.5	11.9				2.5 x 2.5 12 ga	14.3	2.8				2.25 x 2.25 12 ga	1	4	3 x 3 7 ga			1	
0106+71 Rt		1		5.2	9.9				2 x 2 12 ga	10.5						1	4	2.25 x 2.25 12 ga	1			
0107+07 Lt	S.A2E		16.0	5.2	10.4				2.5 x 2.5 10 ga	13.0						1	4	3 x 3 7 ga	1		1	
0107+67 Rt			0.0																			Mount on Light Standard
0108+52 Lt		9		5.0	9.9				2 x 2 12 ga	11.5						1	4	2.25 x 2.25 12 ga				
0109+47 Rt		22		6.0																		Mount on Light Standard
0111+29 Rt		9		5.0																		Mount on Light Standard
0111+98 Lt		9		5.0	9.9				2 x 2 12 ga	11.5						1	4	2.25 x 2.25 12 ga				
0112+47 Rt		9		5.0	9.9				2 x 2 12 ga	11.5						1	4	2.25 x 2.25 12 ga				
0113+11 Lt	S.A2E		16.0	5.2	10.4				2.5 x 2.5 10 ga	13.0						1	4	3 x 3 7 ga	1		1	
0113+88 Lt		22		6.0	10.4				2.25 x 2.25 12 ga	12.9						1	4	2.5 x 2.5 12 ga				
0113+97 Rt		22		6.0	10.4				2.25 x 2.25 12 ga	12.9						1	4	2.5 x 2.5 12 ga				
0115+00 Lt		9			9.9				2 x 2 12 ga	11.5						1	4	2.25 x 2.25 12 ga	1			
0116+34 Lt		32		5.0	9.4				2 x 2 12 ga	10.6						1	4	2.25 x 2.25 12 ga				
0117+78 Lt		9		5.0	9.9				2 x 2 12 ga	11.5						1	4	2.25 x 2.25 12 ga				
0122+18 Rt	S.A2B		8.0	5.2	10.4				2.5 x 2.5 10 ga	12.8						1	4	3 x 3 7 ga			1	
0122+50 Rt		9		5.0	9.9				2 x 2 12 ga	11.5						1	4	2.25 x 2.25 12 ga				
0122+60 Lt	SA 1B		8.0		8.4				2 x 2 12 ga	12.4						1	4	2.25 x 2.25 12 ga				
0123+50 Rt		9		5.0	9.9				2 x 2 12 ga	11.5						1	4	2.25 x 2.25 12 ga				
0123+69 Lt		9		5.0	9.9				2 x 2 12 ga	11.5						1	4	2.25 x 2.25 12 ga				
0124+50 Rt	SA D			8.4	11.4				2.5 x 2.5 12 ga	12.5						1	4	3 x 3 7 ga				Fluorescent Yellow-Green
0125+19 Lt		9		5.0	9.9				2 x 2 12 ga	11.5						1	4	2.25 x 2.25 12 ga				
0125+50 Rt	SA D			8.4	11.4				2.5 x 2.5 12 ga	12.5						1	4	3 x 3 7 ga				Fluorescent Yellow-Green
0125+79 Lt	SA D			8.4	11.4				2.5 x 2.5 12 ga	12.5						1	4	3 x 3 7 ga				Fluorescent Yellow-Green
0126+13 Rt		1		5.2	9.9				2 x 2 12 ga	10.5						1	4	2.25 x 2.25 12 ga	1			
0126+18 Rt				5.0																		Mount on Light Standard

Basis of Estimate
Sign Support Lengths

The sign support lengths have been calculated
using the following vertical clearances:

Areas where parking and/or pedestrian movement will occur - 84"
Urban/rural expressway and freeway - 84" (Offset - 60")
Rural Roadway - 60"
Bike route - 60"

This document was originally issued and sealed by Jacob Nordick, Registration Number PE-6736, on 12/11/13 and the original document is stored at the North Dakota Department of Transportation.

Sign Summary
Perforated Tube

Williston Intersection US 2 & 18th St W & Bison Dr

STATE	PROJECT NO.	SECTION NO.	SHEET NO.
ND	SOIA-7-002(130)019	110	2

Sta/RP	Sign No.	Assembly No.	Flat Sheet For Signs IV SF	Flat Sheet For Signs XI SF	Sign Support Length 1st LF	Sign Support Length 2nd LF	Sign Support Length 3rd LF	Sign Support Length 4th LF	Support Size	Max Post Len LF	Sleeve Length 1st LF	Sleeve Length 2nd LF	Sleeve Length 3rd LF	Sleeve Length 4th LF	Sleeve Size	Anchor EA	Anchor LF	Anchor Size	Reset Sign Panel EA	Reset Sign Support EA	Break-Away EA	Comments
0126+79 Lt	SA D			8.4	11.4				2.5 x 2.5 12 ga	12.5						1	4	3 x 3 7 ga				Fluorescent Yellow-Green
1022+36 Rt		20		9.0	16.2				2.5 x 2.5 10 ga	17.4	5.5				2.19 x 2.19 10 ga	1	4	3 x 3 7 ga			1	
1024+36 Rt		9		5.0	15.7				2.5 x 2.5 10 ga	18.5						1	4	3 x 3 7 ga	1		1	
1024+67 Lt		9		5.0															1			Mount on Light Standard
1028+51 Rt		9		5.0	15.1				2.5 x 2.5 10 ga	18.5						1	4	3 x 3 7 ga			1	
1028+76 Lt		375	12.0		16.8	17.1	17.4		2.5 x 2.5 12 ga	18.2						3	4	3 x 3 7 ga	4		3	
1028+82 Rt			22.8		15.6	15.5	15.3		2.25 x 2.25 12 ga	16.1	5.9	5.8	5.6		2 x 2 12 ga	3	4	3 x 3 7 ga	1		3	
1029+43 Rt		9		5.0	12.9				2.25 x 2.25 12 ga	15.0						1	4	2.5 x 2.5 12 ga				
1029+97 Rt	SA A			9.3	10.9				2.5 x 2.5 12 ga	11.3						1	4	3 x 3 7 ga				
1030+62 Lt mdn		16		9.0	10.2				2.5 x 2.5 12 ga	10.5						1	4	3 x 3 7 ga				
1030+70 Rt	E5-1		30.0		14.5	14.5	14.5		2.5 x 2.5 12 ga	16.3	4.6	4.6	4.6		2.25 x 2.25 12 ga	3	4	3 x 3 7 ga			3	
1031+75 Lt		20		9.0	17.2	17.5			2.5 x 2.5 10 ga	19.7						2	4	3 x 3 7 ga			2	
1031+75 Rt		375	12.0		16.3	16.3	16.3		2.5 x 2.5 12 ga	18.2						3	4	3 x 3 7 ga	4		3	
Sub Total			124.8	257.6		**Total**	628.1									**Total**	204		16	0	22	
Grand Total			124.8	257.6		**Total**	628.1									**Total**	204		16	0	22	

Basis of Estimate
Sign Support Lengths

The sign support lengths have been calculated
using the following vertical clearances:

Areas where parking and/or pedestrian movement will occur - 84"
Urban/rural expressway and freeway - 84" (Offset - 60")
Rural Roadway - 60"
Bike route - 60"

This document was originally issued and sealed by Jacob Nordick, Registration Number PE-6736, on 12/11/13 and the original document is stored at the North Dakota Department of Transportation.

Sign Summary
Perforated Tube

Williston Intersection US 2 & 18th St W & Bison Dr

STATE	PROJECT NO.	SECTION NO.	SHEET NO.
ND	SOIA-7-002(130)019	110	3

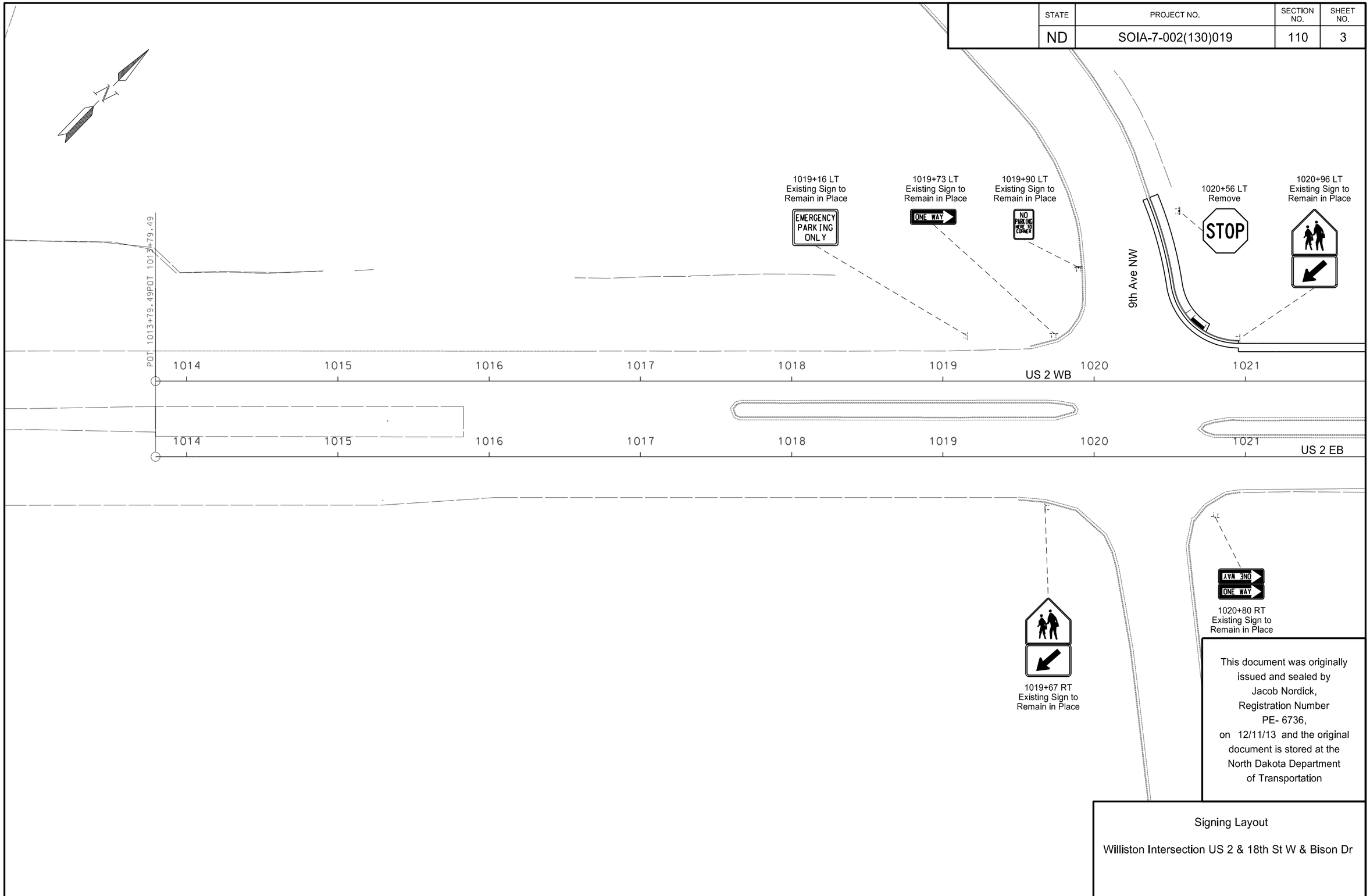

This document was originally issued and sealed by Jacob Nordick, Registration Number PE- 6736, on 12/11/13 and the original document is stored at the North Dakota Department of Transportation

Signing Layout

Williston Intersection US 2 & 18th St W & Bison Dr

STATE	PROJECT NO.	SECTION NO.	SHEET NO.
ND	SOIA-7-002(130)019	110	4

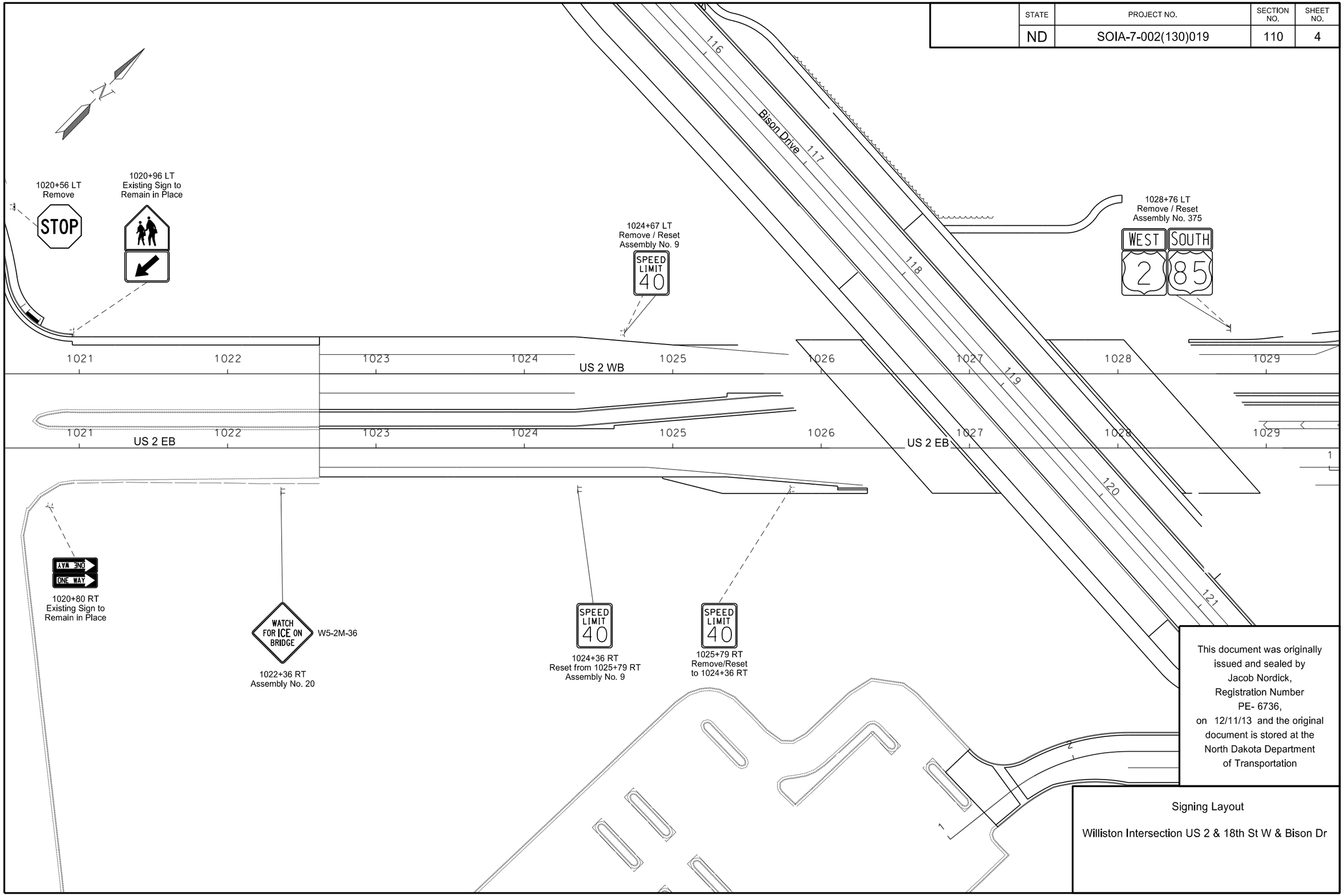

This document was originally issued and sealed by Jacob Nordick, Registration Number PE- 6736, on 12/11/13 and the original document is stored at the North Dakota Department of Transportation

Signing Layout

Williston Intersection US 2 & 18th St W & Bison Dr

STATE	PROJECT NO.	SECTION NO.	SHEET NO.
ND	SOIA-7-002(130)019	110	5

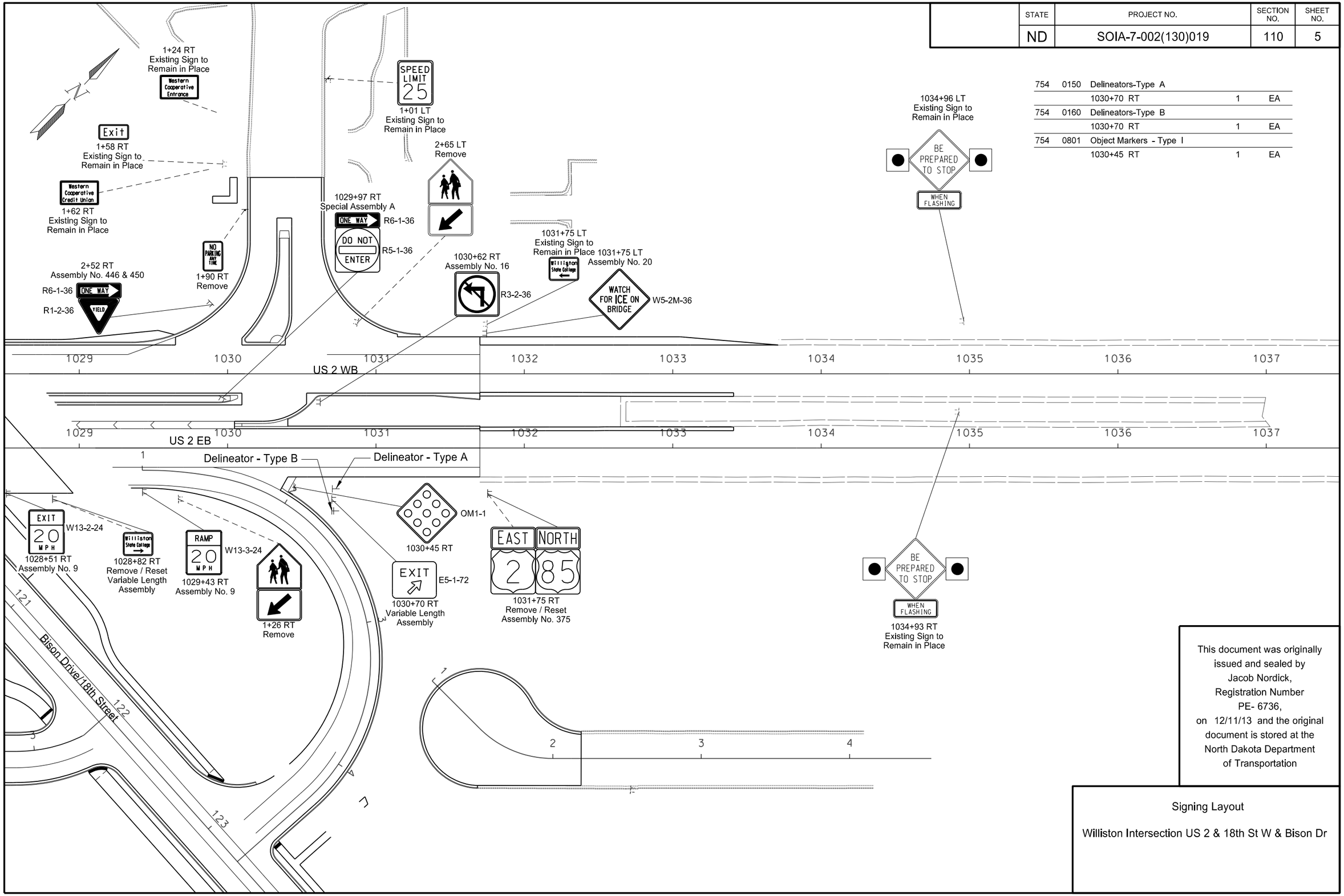

754	0150	Delineators-Type A		
		1030+70 RT	1	EA
754	0160	Delineators-Type B		
		1030+70 RT	1	EA
754	0801	Object Markers - Type I		
		1030+45 RT	1	EA

This document was originally issued and sealed by Jacob Nordick, Registration Number PE- 6736, on 12/11/13 and the original document is stored at the North Dakota Department of Transportation

Signing Layout

Williston Intersection US 2 & 18th St W & Bison Dr

STATE	PROJECT NO.	SECTION NO.	SHEET NO.
ND	SOIA-7-002(130)019	110	6

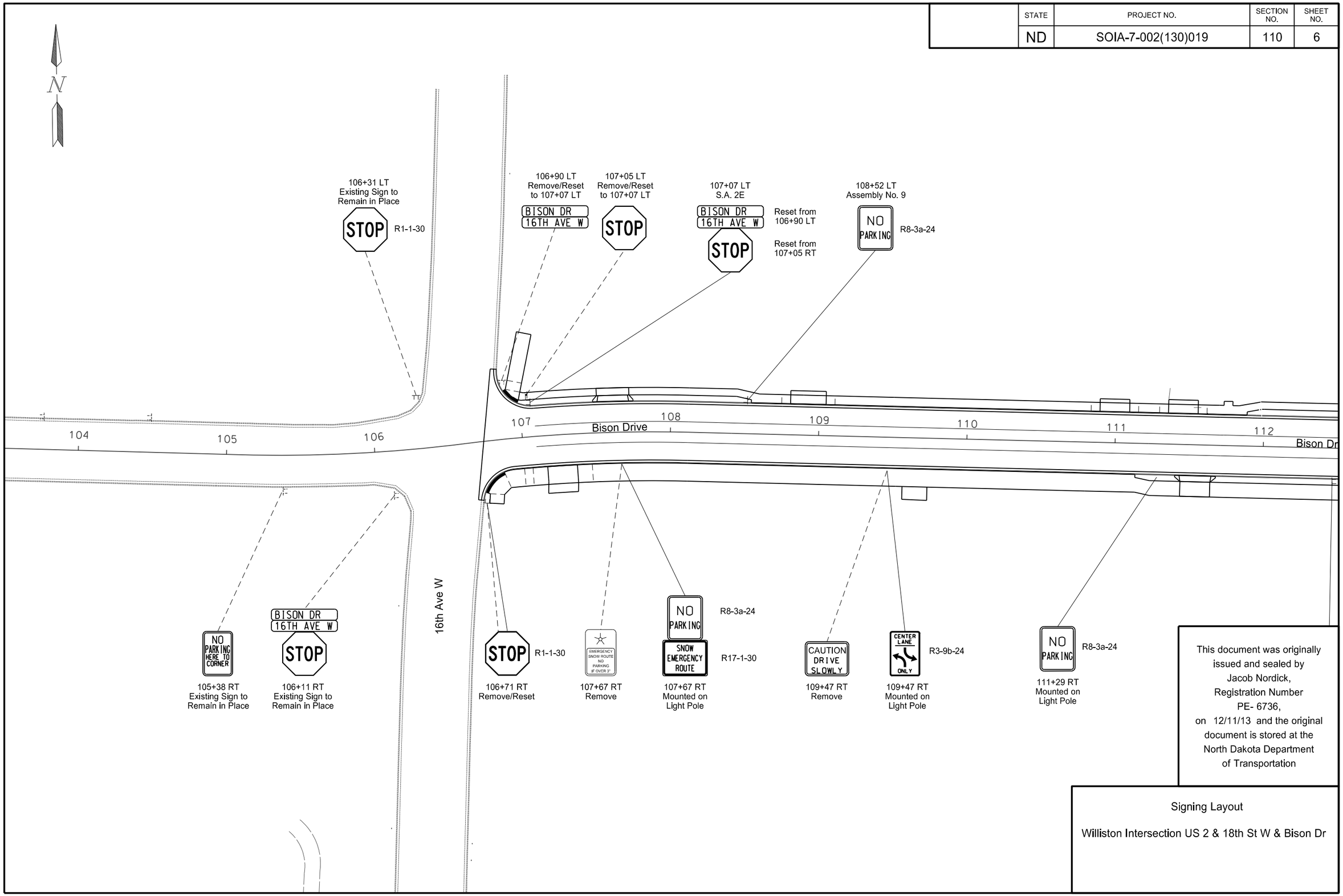

This document was originally issued and sealed by Jacob Nordick, Registration Number PE- 6736, on 12/11/13 and the original document is stored at the North Dakota Department of Transportation

Signing Layout

Williston Intersection US 2 & 18th St W & Bison Dr

STATE	PROJECT NO.	SECTION NO.	SHEET NO.
ND	SOIA-7-002(130)019	110	7

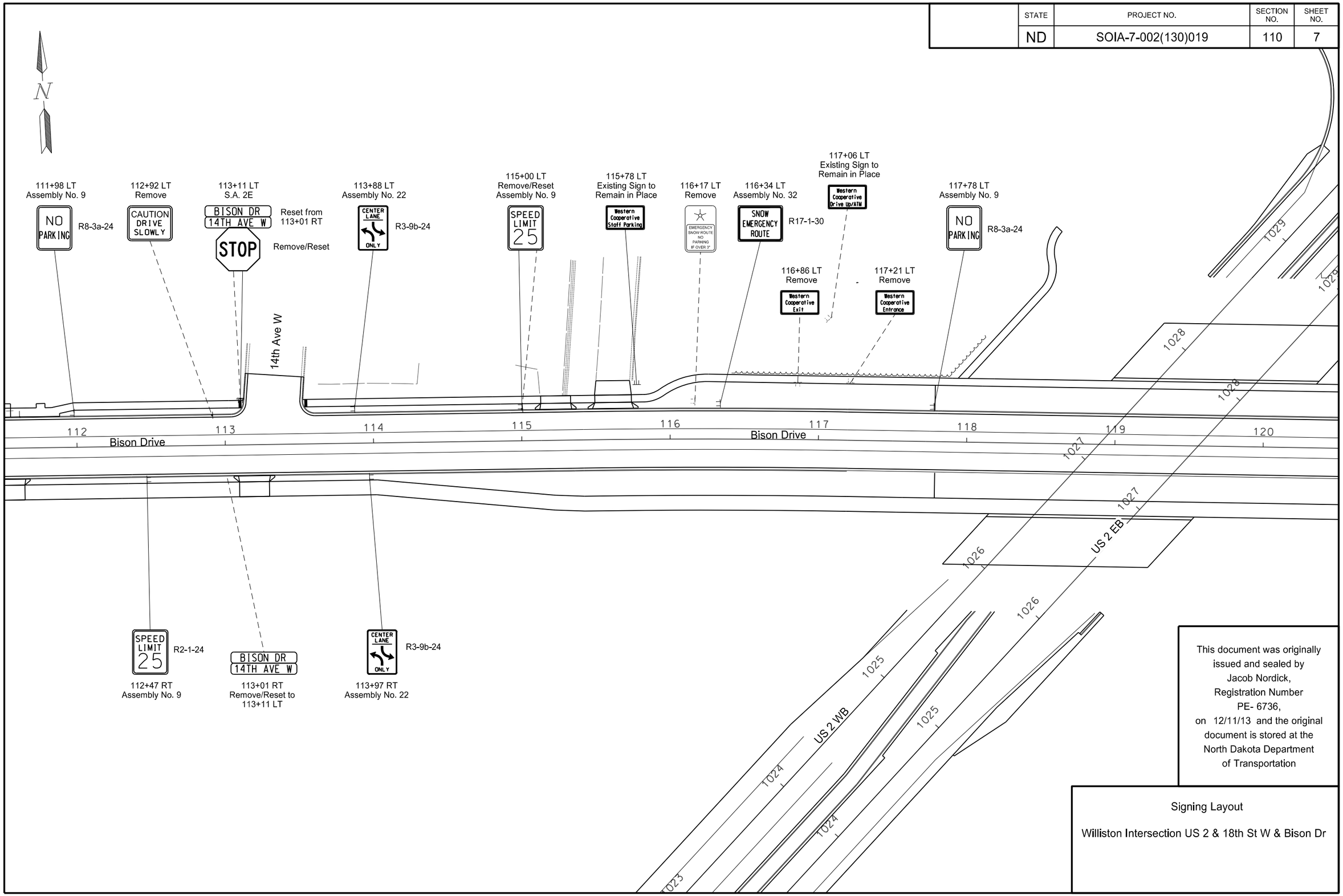

This document was originally issued and sealed by Jacob Nordick, Registration Number PE- 6736, on 12/11/13 and the original document is stored at the North Dakota Department of Transportation

Signing Layout

Williston Intersection US 2 & 18th St W & Bison Dr

STATE	PROJECT NO.	SECTION NO.	SHEET NO.
ND	SOIA-7-002(130)019	110	8

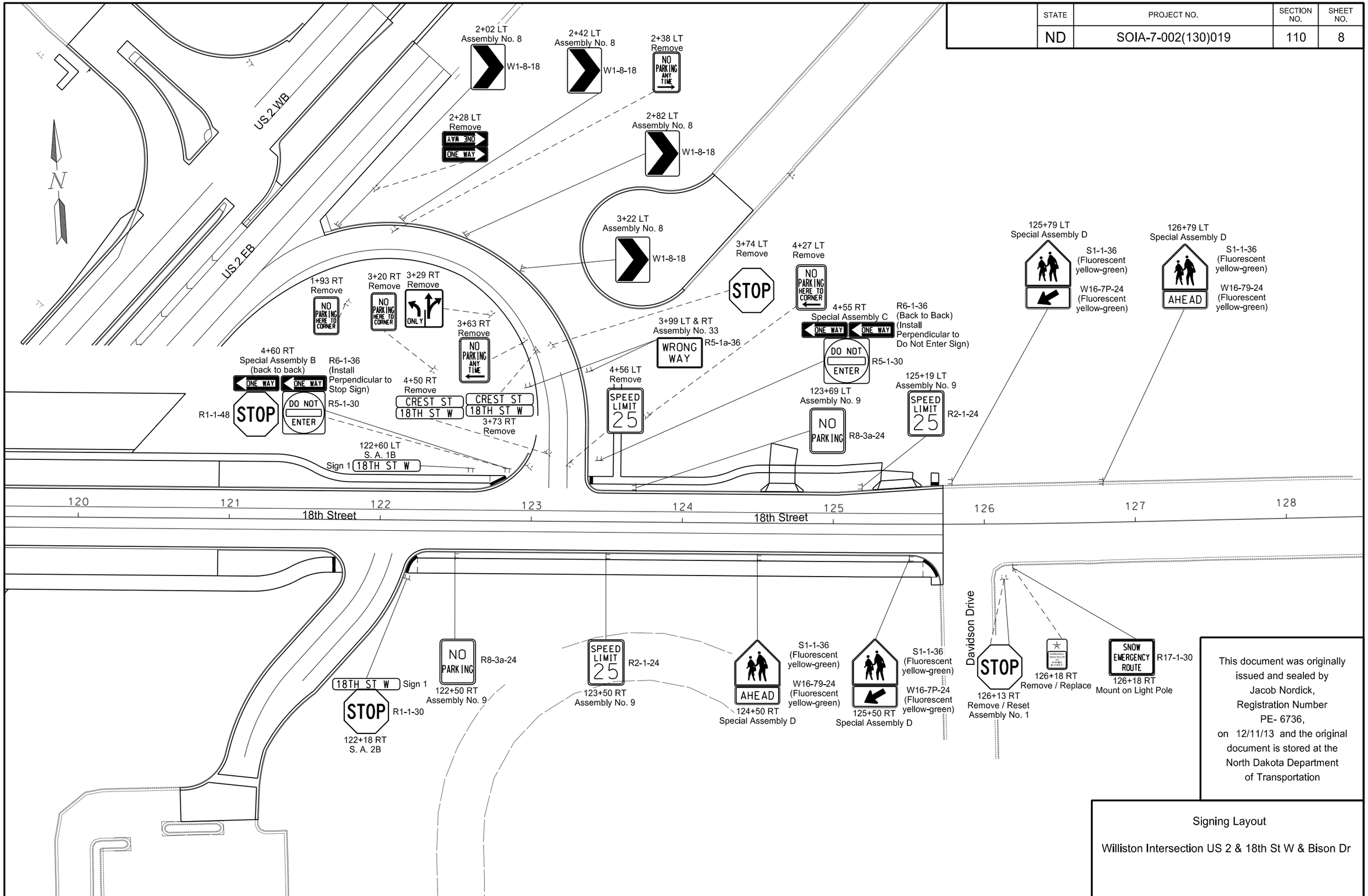

This document was originally issued and sealed by Jacob Nordick, Registration Number PE- 6736, on 12/11/13 and the original document is stored at the North Dakota Department of Transportation

Signing Layout

Williston Intersection US 2 & 18th St W & Bison Dr

STATE	PROJECT NO.	SECTION NO.	SHEET NO.
ND	SOIA-7-002(130)019	110	9

SIGN NUMBER	Sign 1
WIDTH x HEIGHT	4'-0" x 1'-0"
BORDER WIDTH	0.5" (inset 0")
CORNER RADIUS	1.5"
MOUNTING	Ground
BACKGROUND	TYPE: IV Reflective
	COLOR: Green
LEGEND/BORDER	TYPE: IV Reflective
	COLOR: White

SYMBOL	X	Y	WID	HT	ANGLE

STATION(S):
4+61 RT (US 2 Loop)
122+18 RT (Bison Dr)

AREA: 9451.7 Sq.Ft.

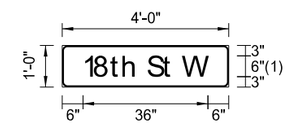

FONT:
(1) ClearviewHwy-3-W

Dimensions are in inches.tenths

Letter locations are panel edge to lower left corner

PANEL STYLE: ND_Street_Name_Conv_Border.ssl

LETTER POSITION (X)																			LENGTH	SIZE	SERIES
1	8	t	h		S	t		W											36	6/4.9	ClearviewHwy-3-W
399.5	402.9	407.6	411.2	414.9	418.2	422.7	425.3	428.4													

This document was originally issued and sealed by Jacob Nordick, Registration Number PE- 6736, on 12/11/13 and the original document is stored at the North Dakota Department of Transportation

Signing Layout

Williston Intersection US 2 & 18th St W & Bison Dr

Permanent Sign Detail

STATE	PROJECT NO.	SECTION NO.	SHEET NO.
ND	SOIA-7-002(130)019	110	10

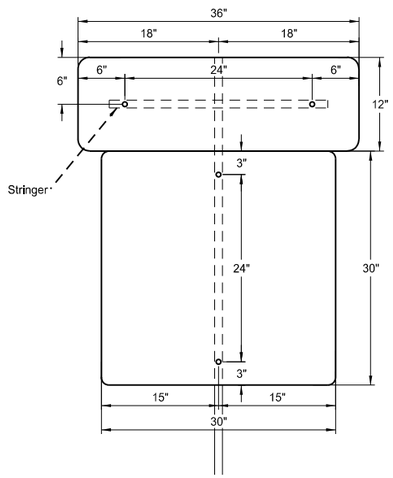

Special Assembly A
Sta 1029+97 RT
Design Area 9.25 SF

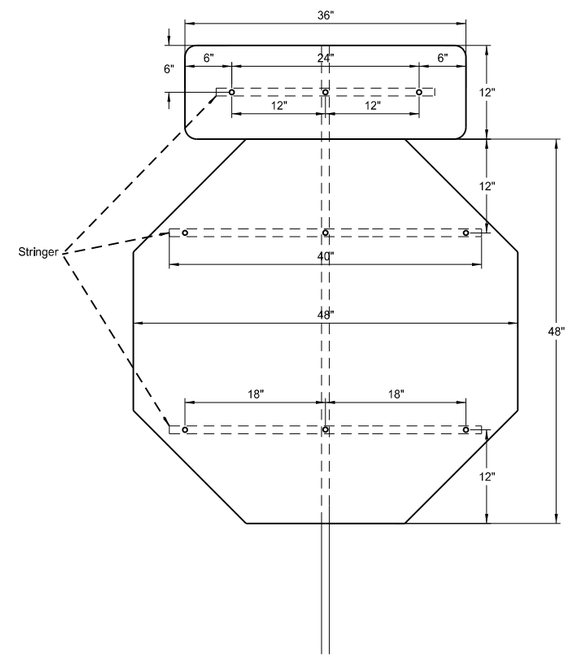

Special Assembly B
Sta 4+61 RT
Design Area 13.25 SF

Back to Back
Install Perpendicular
to Stop Sign

Back to Back

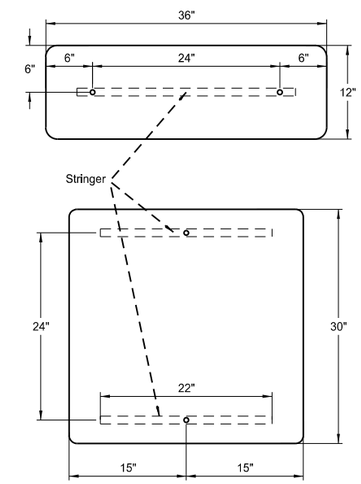

This document was originally issued and sealed by Jacob Nordick, Registration Number PE- 6736, on 12/11/13 and the original document is stored at the North Dakota Department of Transportation

Signing Layout

Williston Intersection US 2 & 18th St W & Bison Dr

Special Assemblies

STATE	PROJECT NO.	SECTION NO.	SHEET NO.
ND	SOIA-7-002(130)019	110	11

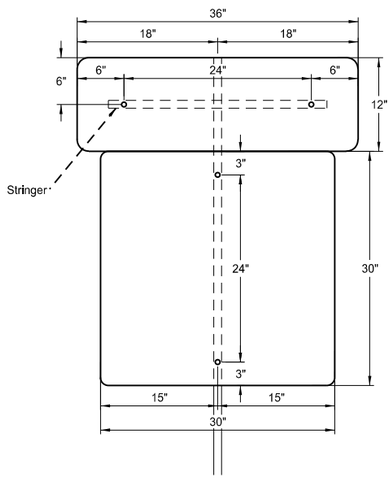

Special Assembly C
Sta 4+55 RT
Design Area 6.25 SF

Back to Back
Install Perpendicular
to Do Not Enter Sign

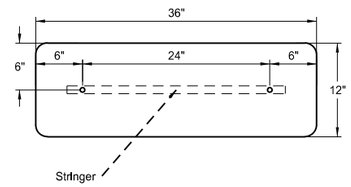

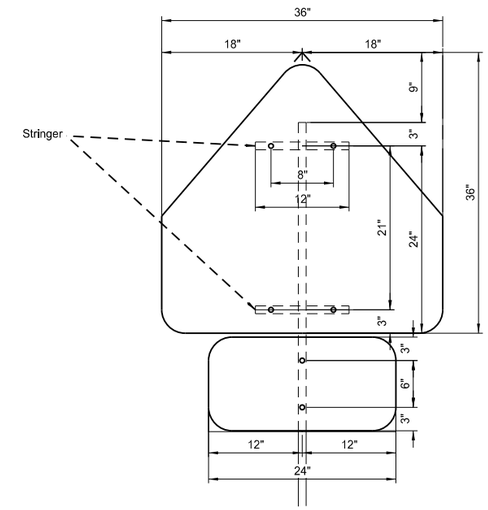

Special Assembly D
Sta 124+50 RT
Sta 125+50 RT
Sta 125+79 LT
Sta 126+79 LT
Design Area 8.4 SF

This document was originally issued and sealed by Jacob Nordick, Registration Number PE- 6736, on 12/11/13 and the original document is stored at the North Dakota Department of Transportation

Signing Layout

Williston Intersection US 2 & 18th St W & Bison Dr

Special Assemblies

STATE	PROJECT NO.	SECTION NO.	SHEET NO.
ND	SOIA-7-002(130)019	120	1

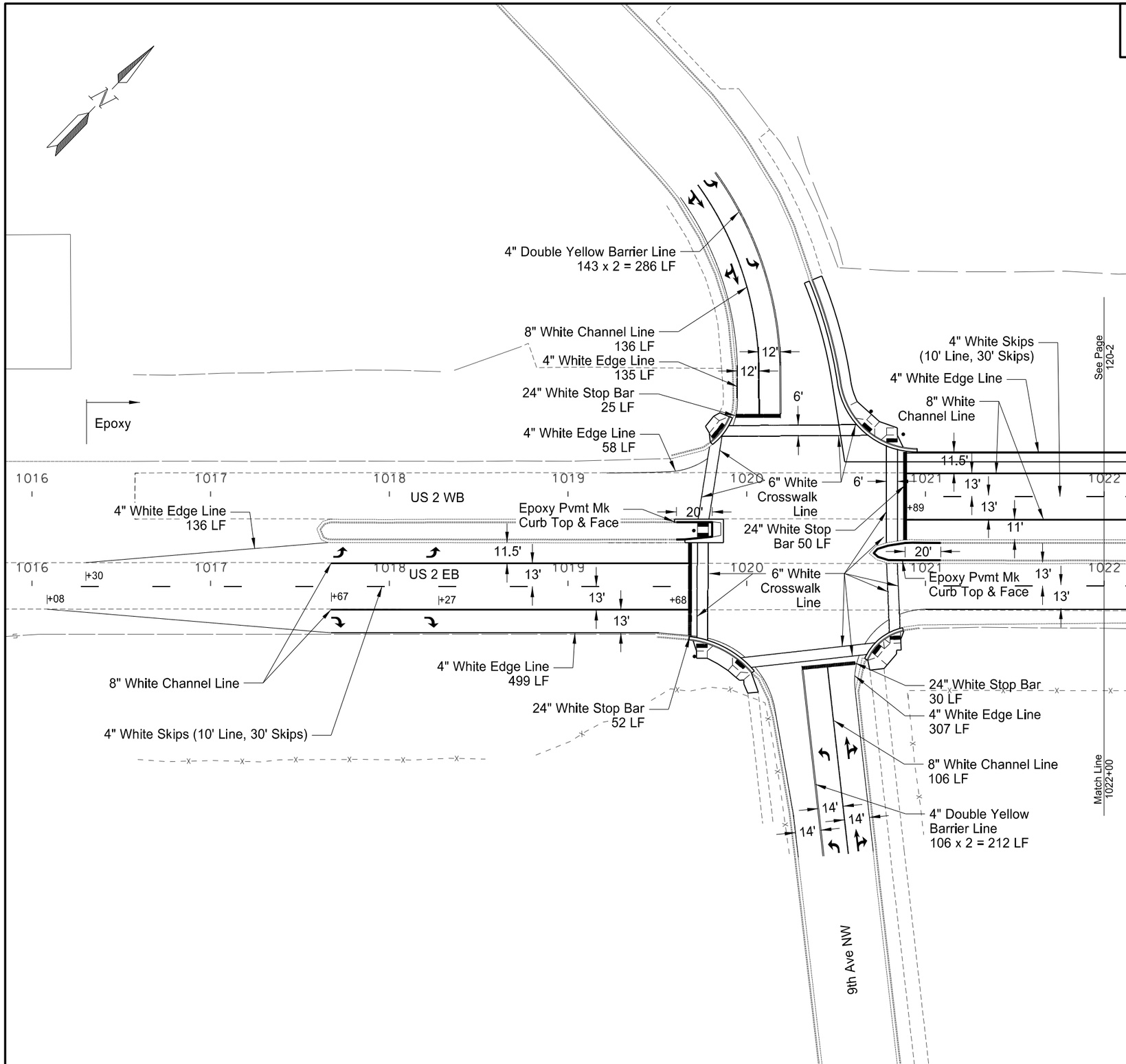

762	0112	Epoxy Pvmt Mk Message		
		Arrow (LT or RT)	16 SF x 8 EA =	128 SF
		Arrow (Thru RT)	27 SF x 4 EA =	108 SF
			Total =	236 SF
762	0113	Epoxy Pvmt Mk 4in Line		
		Double Yellow Barrier		498 LF
		Solid White Edge Line		1183 LF
		Solid White Centerline Skip		150 LF
			Total =	1831 LF
762	0114	Epoxy Pvmt Mk 6in Line		
		Solid White Crosswalk Line		670 LF
762	0115	Epoxy Pvmt Mk 8in Line		
		Solid White Channel Line		863 LF
762	0117	Epoxy Pvmt Mk 24in Line		
		Solid White Stop bar		156 LF
762	0118	Epoxy Pvmt Mk Curb Top & Face		
		Solid Yellow Line		127 LF

This document was originally issued and sealed by Jacob Nordick, Registration Number PE- 6736, on 1/23/14 and the original document is stored at the North Dakota Department of Transportation

Pavement Marking

Williston Intersection US 2 & 18th St W & Bison Dr

US 2

STATE	PROJECT NO.	SECTION NO.	SHEET NO.
ND	SOIA-7-002(130)019	120	2

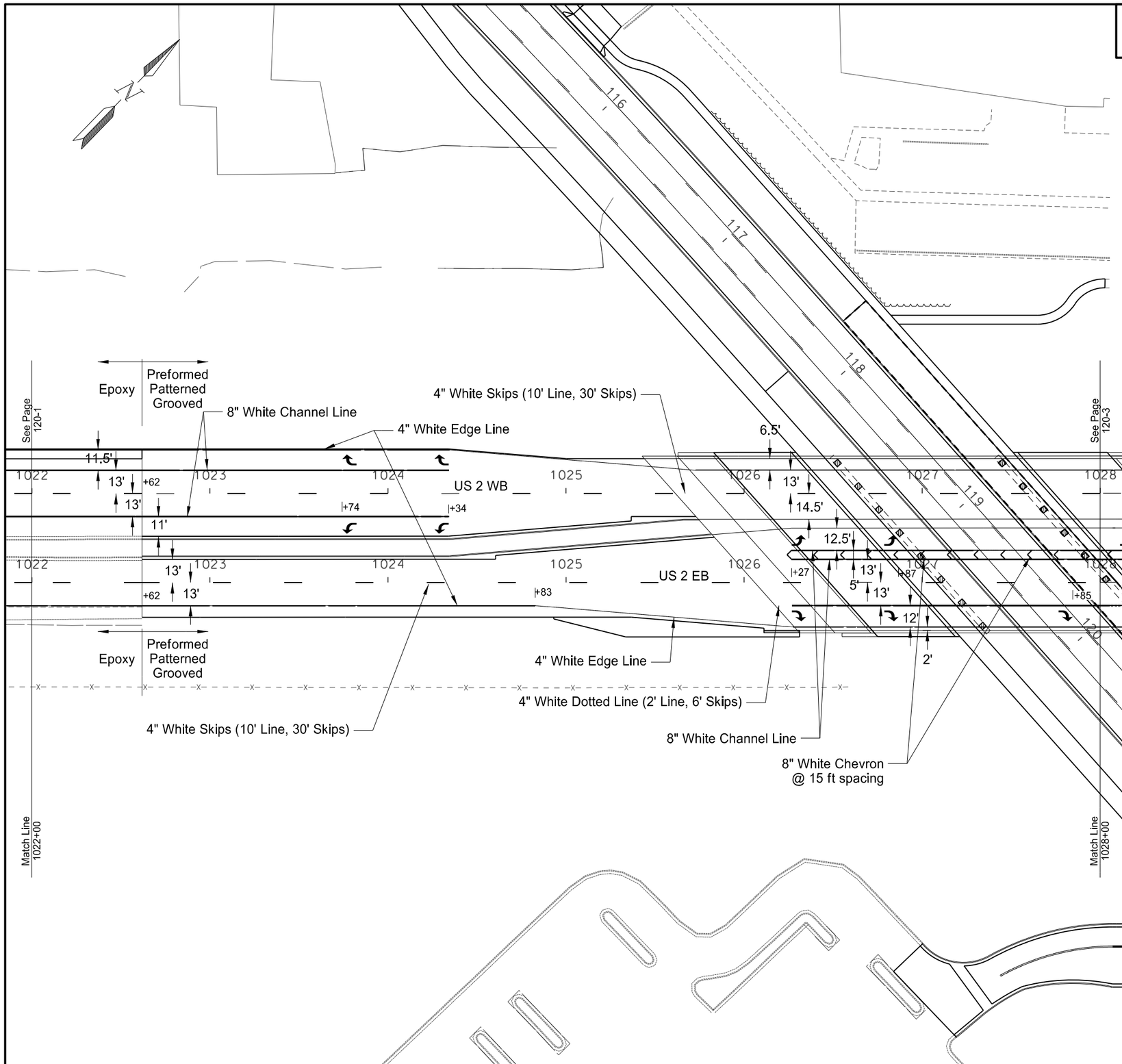

762	0113	Epoxy Pvmt Mk 4in Line	
		Solid White Edge Line	124 LF
		Solid White Centerline Skip	30 LF
		Total=	154 LF
762	0115	Epoxy Pvmt Mk 8in Line	
		Solid White Channel Line	124 LF
762	0122	Preformed Patterned Pvmt Mk - Message (Grooved)	
		Arrow (RT)	16 SF x 4 EA = 64 SF
		Arrow (LT)	16 SF x 5 EA = 80 SF
		Total=	144 SF
762	1305	Preformed Patterned Pvmt Mk 4in Line - Grooved	
		Solid White Edge Line	1078 LF
		Solid White Centerline Skip	270 LF
		Total=	1348 LF
762	1309	Preformed Patterned Pvmt Mk 8in Line - Grooved	
		Solid White Channel Line	951 LF

*Note:
See Sheets 5-8 for
Bison Dr Striping quantities

This document was originally issued and sealed by Jacob Nordick, Registration Number PE- 6736, on 12/11/13 and the original document is stored at the North Dakota Department of Transportation

Pavement Marking

Williston Intersection US 2 & 18th St W & Bison Dr

US 2

STATE	PROJECT NO.	SECTION NO.	SHEET NO.
ND	SOIA-7-002(130)019	120	3

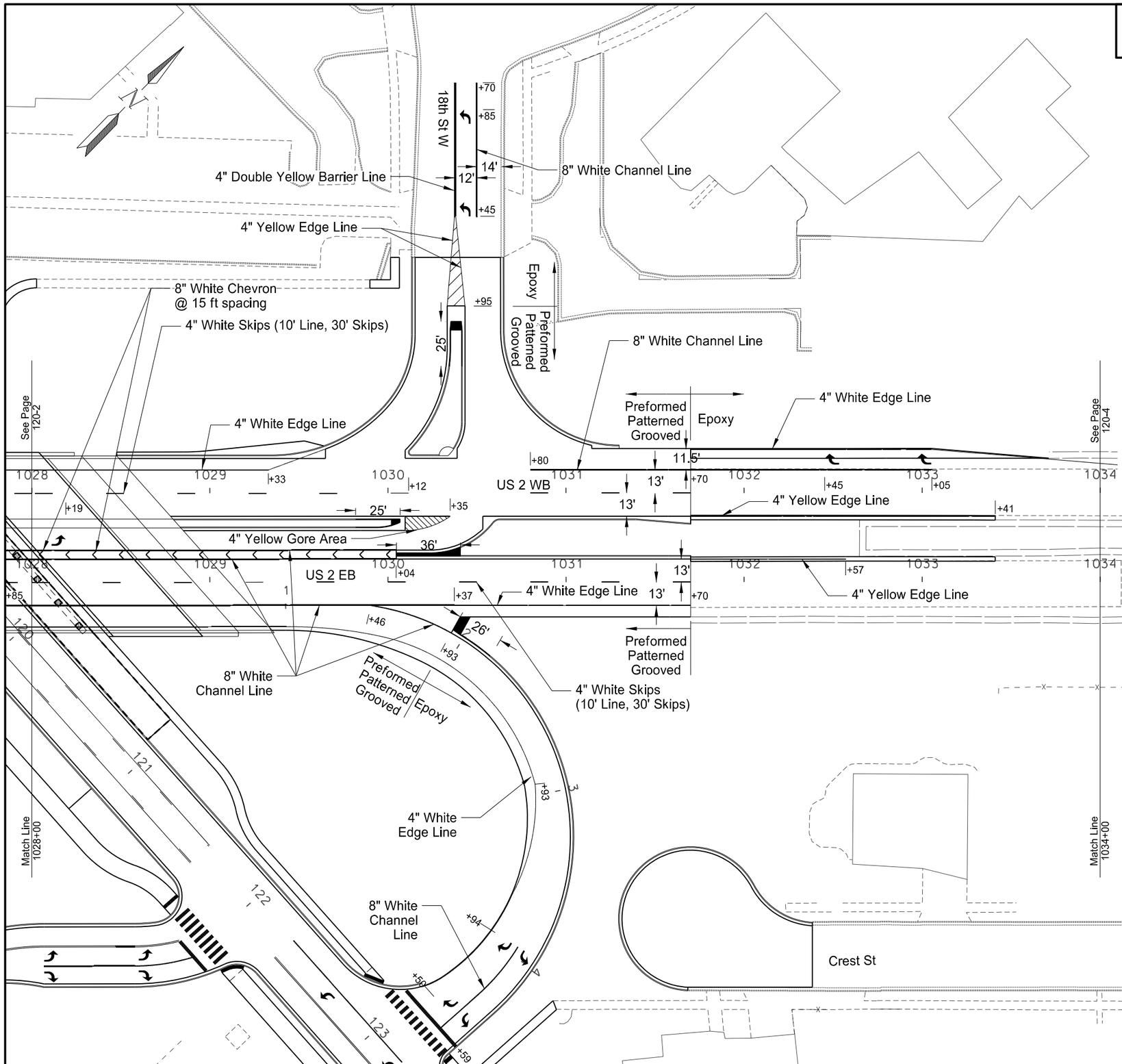

762	0112	Epoxy Pvmt Mk Message		
		Arrow (RT)	16 SF x 4 EA =	64 SF
		Arrow (LT)	16 SF x 4 EA =	64
			Total =	128 SF
762	0113	Epoxy Pvmt Mk 4in Line		
		Double Yellow Barrier		150 LF
		Solid White Edge Line		460 LF
		Solid Yellow Line		525 LF
			Total=	1135 LF
762	0115	Epoxy Pvmt Mk 8in Line		
		Solid White Channel Line		273 LF
762	0118	Epoxy Pvmt Mk Curb Top & Face		
		Solid Yellow Line		197 LF
762	0122	Preformed Patterned Pvmt Mk - Message (Grooved)		
		Arrow (LT)	16 SF x 1 EA =	16 SF
762	1305	Preformed Patterned Pvmt Mk 4in Line - Grooved		
		Solid White Edge Line		530 LF
		Solid White Centerline Skip		170 LF
		Solid Yellow Gore Area		114 LF
			Total=	814 LF
762	1309	Preformed Patterned Pvmt Mk 8in Line - Grooved		
		Solid White Channel Line		884 LF

*Note:
See Sheets 5-8 for
Bison Dr Striping quantities

This document was originally issued and sealed by Jacob Nordick, Registration Number PE- 6736, on 12/11/13 and the original document is stored at the North Dakota Department of Transportation

Pavement Marking

Williston Intersection US 2 & 18th St W & Bison Dr

US 2

STATE	PROJECT NO.	SECTION NO.	SHEET NO.
ND	SOIA-7-002(130)019	120	4

762 0113 Epoxy Pvmt Mk 4in Line
Solid White Edge Line 41 LF

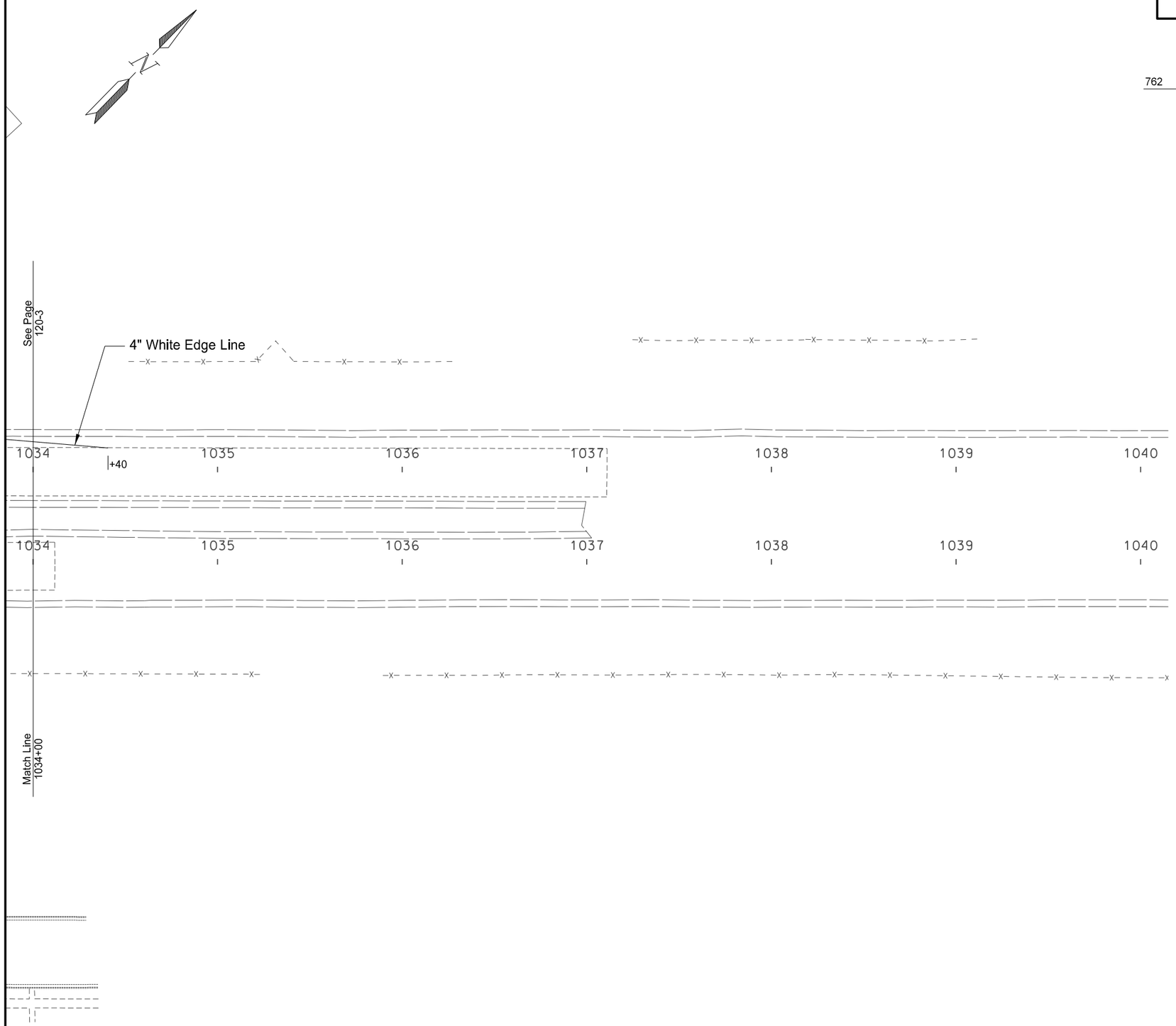

This document was originally issued and sealed by Jacob Nordick, Registration Number PE- 6736, on 12/11/13 and the original document is stored at the North Dakota Department of Transportation

Pavement Marking

Williston Intersection US 2 & 18th St W & Bison Dr

STATE	PROJECT NO.	SECTION NO.	SHEET NO.
ND	SOIA-7-002(130)019	120	5

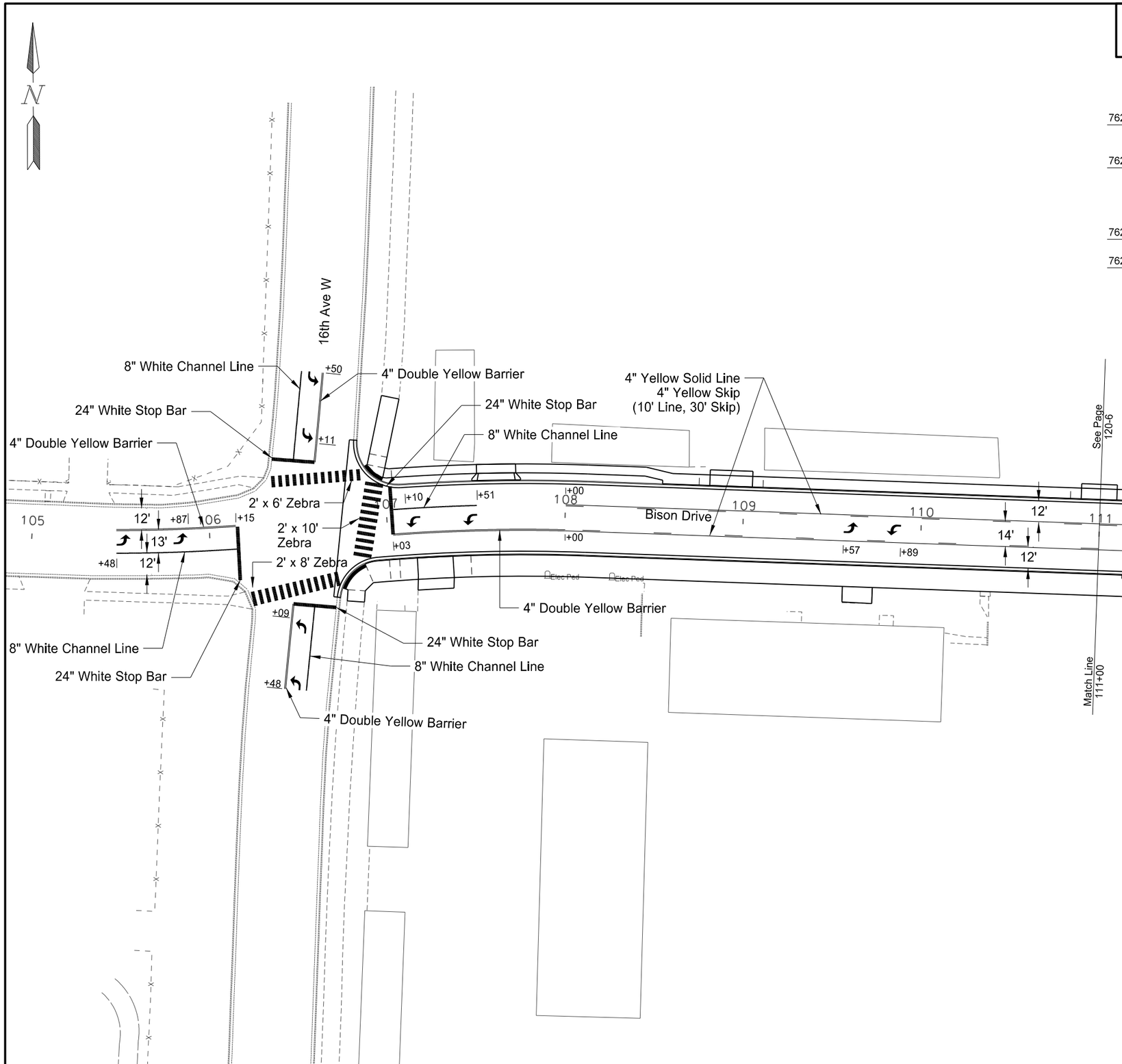

762	0112	Epoxy Pvmt Mk Message		
		Arrow (LT)	16 SF x 10 EA =	160 SF
			Total =	160 SF
762	0113	Epoxy Pvmt Mk 4in Line		
		Double Yellow Barrier		511 LF
		Solid Yellow Line		600 LF
		Solid Yellow Skip		150 LF
			Total =	1261 LF
762	0115	Epoxy Pvmt Mk 8in Line		
		Solid White Channel Line		215 LF
762	0117	Epoxy Pvmt Mk 24in Line		
		Solid White Stop bar		105 LF
		Solid White Zebra Crosswalk		292 LF
			Total =	397 LF

This document was originally issued and sealed by Jacob Nordick, Registration Number PE- 6736, on 12/11/13 and the original document is stored at the North Dakota Department of Transportation

Pavement Marking

Williston Intersection US 2 & 18th St W & Bison Dr

Bison Drive

STATE	PROJECT NO.	SECTION NO.	SHEET NO.
ND	SOIA-7-002(130)019	120	6

762	0112	Epoxy Pvmt Mk Message		
		Arrow (LT)	16 SF x 4 EA =	64 SF
			Total =	64 SF
762	0113	Epoxy Pvmt Mk 4in Line		
		Double Yellow Barrier		200 LF
		Solid Yellow Line		888 LF
		Solid Yellow Skip		222 LF
			Total =	1310 LF
762	0115	Epoxy Pvmt Mk 8in Line		
		Solid White Channel Line		50 LF
762	0117	Epoxy Pvmt Mk 24in Line		
		Solid White Zebra Crosswalk		54 LF

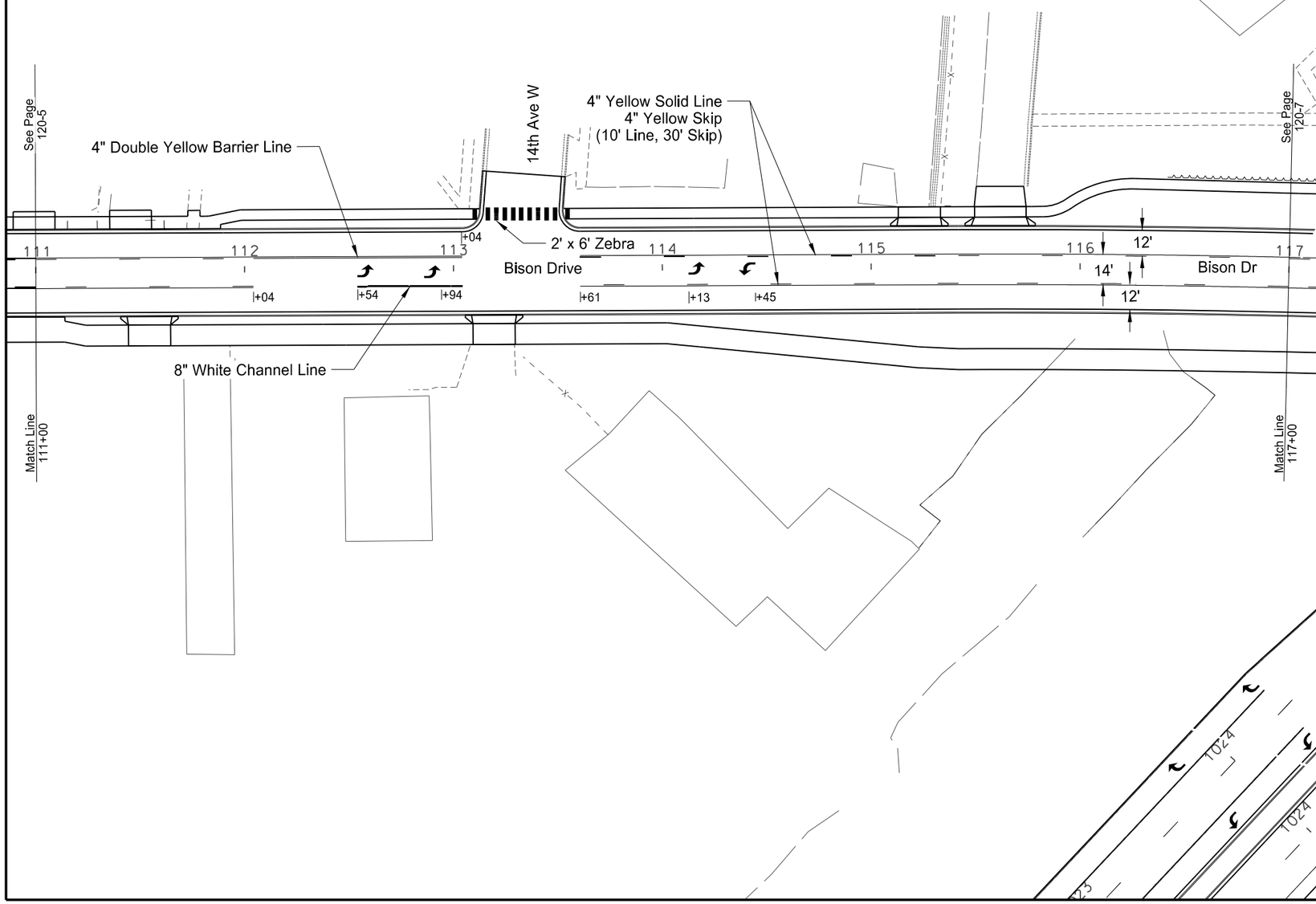

This document was originally issued and sealed by Jacob Nordick, Registration Number PE- 6736, on 12/11/13 and the original document is stored at the North Dakota Department of Transportation

Pavement Marking

Williston Intersection US 2 & 18th St W & Bison Dr

Bison Drive

STATE	PROJECT NO.	SECTION NO.	SHEET NO.
ND	SOIA-7-002(130)019	120	7

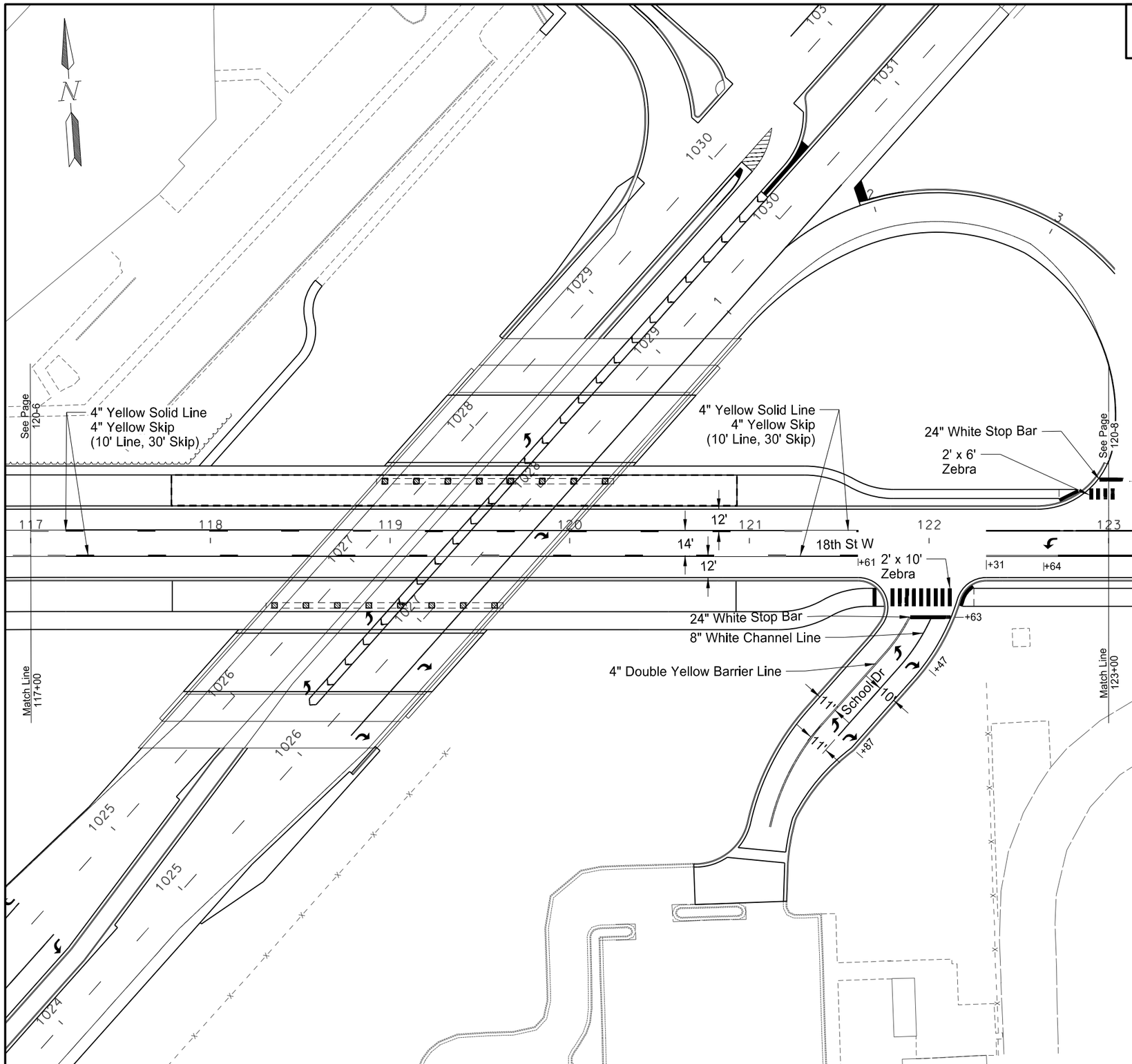

762	0112	Epoxy Pvmt Mk Message		
		Arrow (LT)	16 SF x 3 EA =	48 SF
		Arrow (RT)	16 SF x 2 EA =	32 SF
			Total =	80 SF
762	0113	Epoxy Pvmt Mk 4in Line		
		Double Yellow Barrier		421 LF
		Solid Yellow Line		921 LF
		Solid Yellow Skip		230 LF
			Total =	1572 LF
762	0115	Epoxy Pvmt Mk 8in Line		
		Solid White Channel Line		153 LF
762	0117	Epoxy Pvmt Mk 24in Line		
		Solid White Stop bar		27 LF
		Solid White Zebra Crosswalk		108 LF
			Total =	135 LF

*Note:
See sheets 1 - 4 for
US 2 striping quantities

This document was originally issued and sealed by Jacob Nordick, Registration Number PE- 6736, on 12/11/13 and the original document is stored at the North Dakota Department of Transportation

Pavement Marking

Williston Intersection US 2 & 18th St W & Bison Dr

Bison Drive

STATE	PROJECT NO.	SECTION NO.	SHEET NO.
ND	SOIA-7-002(130)019	120	8

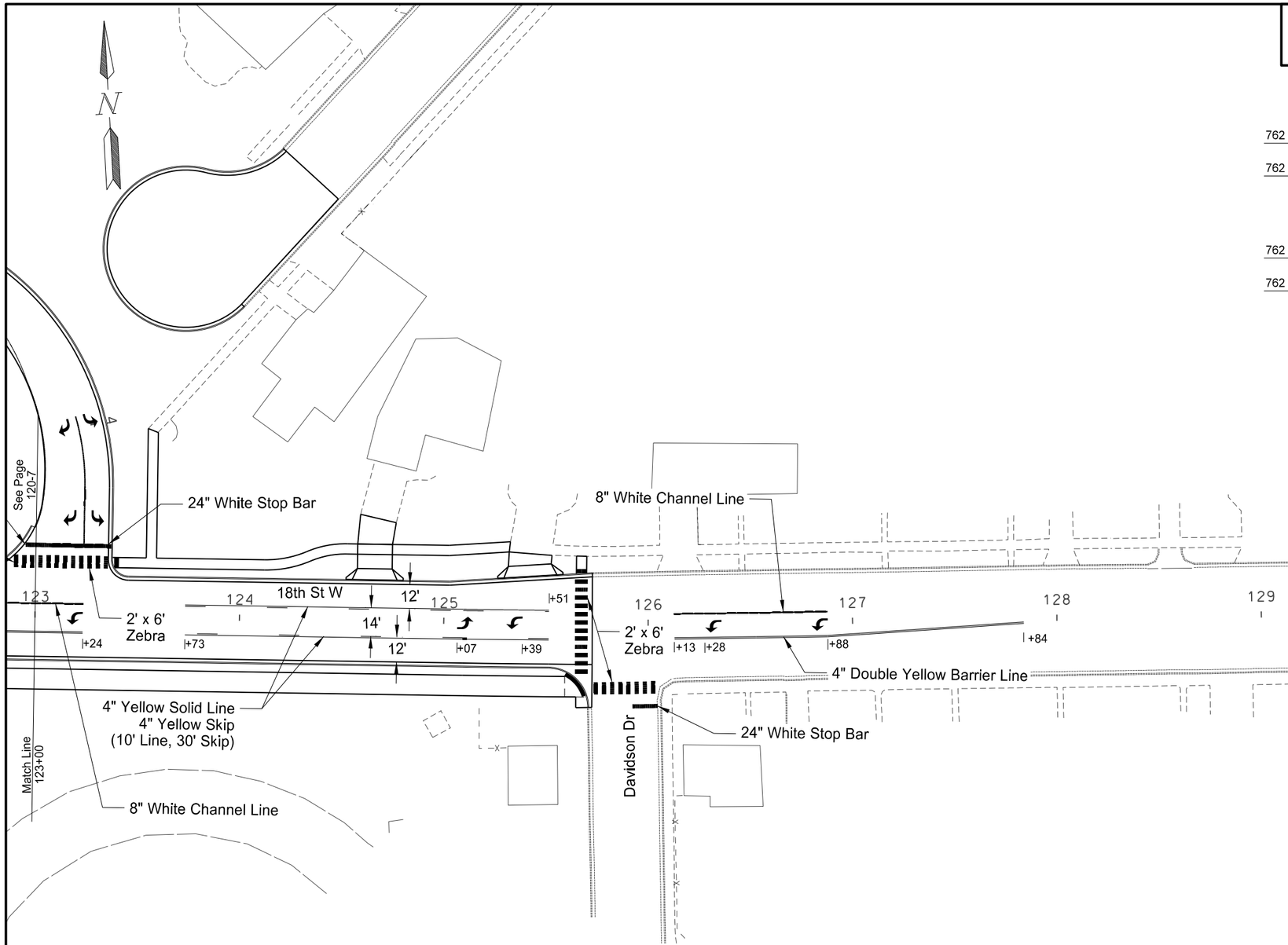

762	0112	Epoxy Pvmt Mk Message		
		Arrow (LT)	16 SF x 5 EA = 80	SF
762	0113	Epoxy Pvmt Mk 4in Line		
		Double Yellow Barrier	390	LF
		Solid Yellow Line	356	LF
		Solid Yellow Skip	90	LF
		Total =	836	LF
762	0115	Epoxy Pvmt Mk 8in Line		
		Solid White Channel Line	99	LF
762	0117	Epoxy Pvmt Mk 24in Line		
		Solid White Stop bar	49	LF
		Solid White Zebra Crosswalk	174	LF
		Total =	223	LF

Note:
Loop ramp Epoxy Pvmt Mk Message and Epoxy Pvmt Mk 8IN Line are quantified on sheet 120-3.

This document was originally issued and sealed by Jacob Nordick, Registration Number PE- 6736, on 12/11/13 and the original document is stored at the North Dakota Department of Transportation

Pavement Marking

Williston Intersection US 2 & 18th St W & Bison Dr

Bison Drive

STATE	PROJECT NO.	SECTION NO.	SHEET NO.
ND	SOIA-7-002(130)019	130	1

23 U.S.C. 409
NDDOT Reserves All Objections

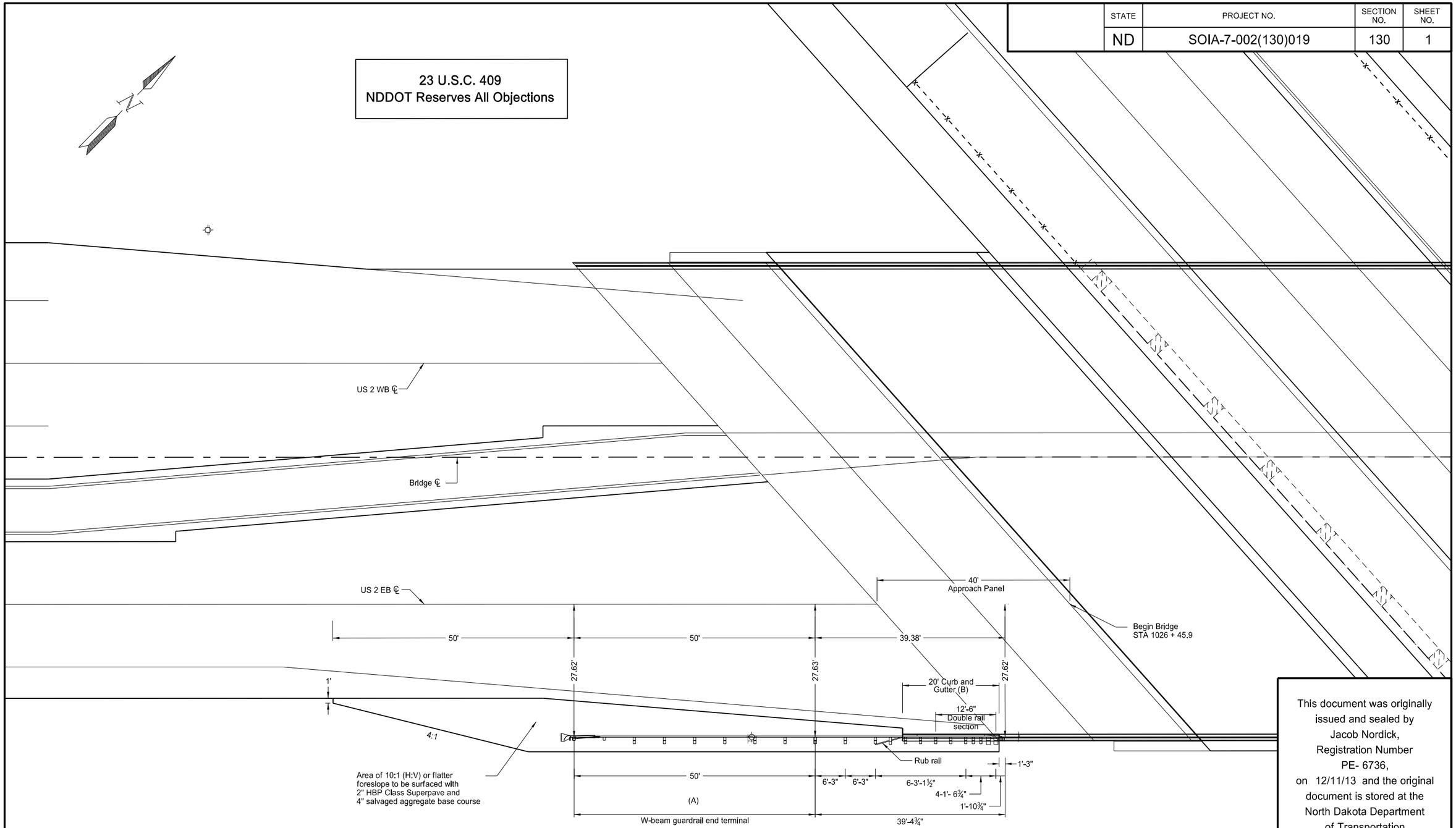

This document was originally issued and sealed by Jacob Nordick, Registration Number PE- 6736, on 12/11/13 and the original document is stored at the North Dakota Department of Transportation

(A) The W-beam guardrail end terminal to be installed at this location shall be an ET-Plus

(B) The curb and gutter shall be installed in accordance with Standard Drawing D-748-1, except that there shall be height transitions provided for a distance of 3 feet at each end as shown on Standard Drawing D-764-3.

W-beam guardrail layout

Williston Intersection US 2 & 18th St W & Bison Dr

South of Bison Drive

RP 19.458

STATE	PROJECT NO.	SECTION NO.	SHEET NO.
ND	SOIA-7-002(130)019	130	2

23 U.S.C. 409
NDDOT Reserves All Objections

(A) The W-beam guardrail end terminal to be installed at this location shall be FLEAT

(B) The curb and gutter shall be installed in accordance with Standard Drawing D-748-1, except that there shall be height transitions provided for a distance of 3 feet at each end as shown on Standard Drawing D-764-9.

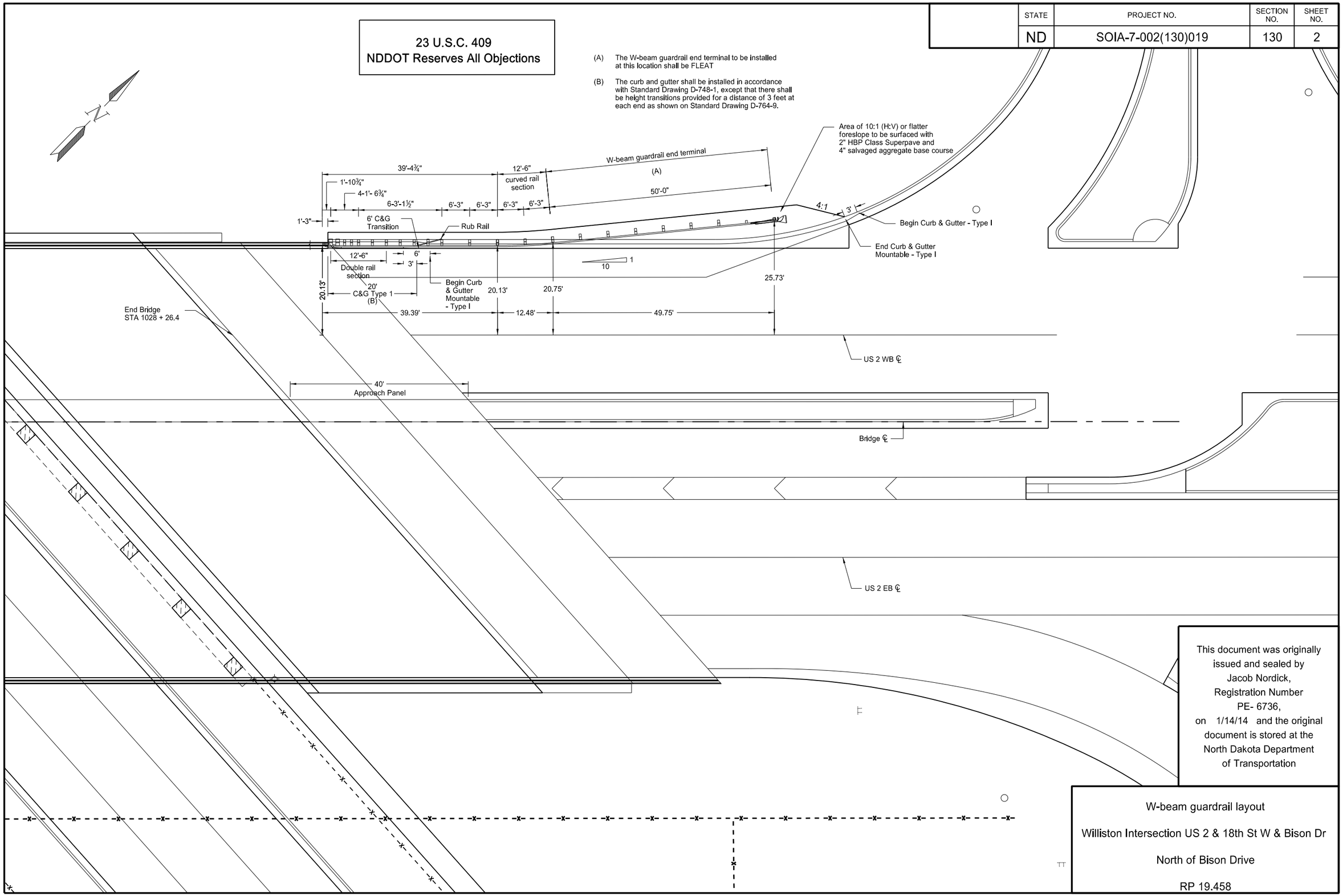

This document was originally issued and sealed by Jacob Nordick, Registration Number PE- 6736, on 1/14/14 and the original document is stored at the North Dakota Department of Transportation

W-beam guardrail layout

Williston Intersection US 2 & 18th St W & Bison Dr

North of Bison Drive

RP 19.458

23 U.S.C. 409
NDDOT Reserves All Objections

STATE	PROJECT NO.	SECTION NO.	SHEET NO.
ND	SOIA-7-002(130)019	130	3

W-BEAM GUARDRAIL SUMMARY OF QUANTITIES

W-BEAM GUARDRAIL AT BRIDGE ENDS

LOCATION	(A) TERM-INAL CON-NECTOR	(A) 5/8" ø x 22" LONG GUARD-RAIL BOLT	(A) 5/8" ø x 20" LONG GUARD-RAIL BOLT	(A) 7/8" ø x 10" LONG H.S. HEX HEAD BOLT	(A) 5/8" ø x 18" LONG GUARD-RAIL BOLT	(A) 6"x 8" x 14" TIMBER BLOCK	(A) 6"x 8" x 6' - 0" TIMBER POST	(A) 5/8" ø x 1 1/4" LONG GUARD-RAIL BOLT	(A) 12'-6" DOUBLE RAIL SECTION	(A) 12'-6" STRAIGHT RAIL SECTION	(A) 12'-6" CURVED RAIL SECTION	(A) 5/8" ø x 12" LONG GUARD-RAIL BOLT	(A) 1/2" ø x 4" LONG LAG SCREW	(A) 6" x 8" x 7'-0" TIMBER POST	(A) RUB RAIL END SHOE	(A) C 6 x 8.2 x 14'-6 1/4" RUB RAIL SECTION	(A) C 6 x 8.2 x 12'-7" BENT RUB RAIL SECTION	(A) 5/8" ø x 1 1/2" LONG GUARD-RAIL BOLT	(A) 7 3/4" x 4 1/2" x 3/8" RUB RAIL SPLICE PLATE	(A) 10" x 10" x 8'-0" TIMBER POST	(A) 10" x 8" x 21" TAPERED TIMBER BLOCK	(A) 6" x 8" x 21" TIMBER BLOCK	(A) 6" x 9 3/4" x 14" TIMBER BLOCK	(A) REFL-ECTOR-IZED PLATES
	EACH	EACH	EACH	EACH	EACH	EACH	EACH	EACH	EACH	EACH	EACH	EACH	EACH	EACH	EACH	EACH	EACH	EACH	EACH	EACH	EACH	EACH	EACH	EACH
1025+40.35 to 1026+32.43 Rt	1	2	10	4	10	3	8	32	1	2		2	1	3	1	1	1	4	1	2	2	7	1	5
1028+46.50 to 1029+50.91 Lt	1	2	10	4	12	5	10	40	1	2	1	2	1	3	1	1	1	4	1	2	2	7	1	6
TOTAL	2	4	20	8	22	8	18	72	2	4	1	4	2	6	2	2	2	8	2	4	4	14	2	11

(A) These items are not to be bid separately but shall be included in the price bid for the item "W-Beam Guardrail".

W-beam guardrail			
1025+40.35 to 1026+32.43 Rt		39.4	LF
1028+46.50 to 1029+50.91 Lt		51.9	LF
	Total	91.3	LF

W-beam guardrail end terminal			
1025+40.35 to 1026+32.43 Rt		1	EA
1028+46.50 to 1029+50.91 Lt		1	EA
	Total	2	EA

This document was originally issued and sealed by Jacob Nordick, Registration Number PE- 6736, on 12/11/13 and the original document is stored at the North Dakota Department of Transportation

W-beam guardrail quantities

Williston Intersection US 2 & 18th St W & Bison Dr

STATE	PROJECT NO.	SECTION NO.	SHEET NO.
ND	SOIA-7-002(130)019	140	1

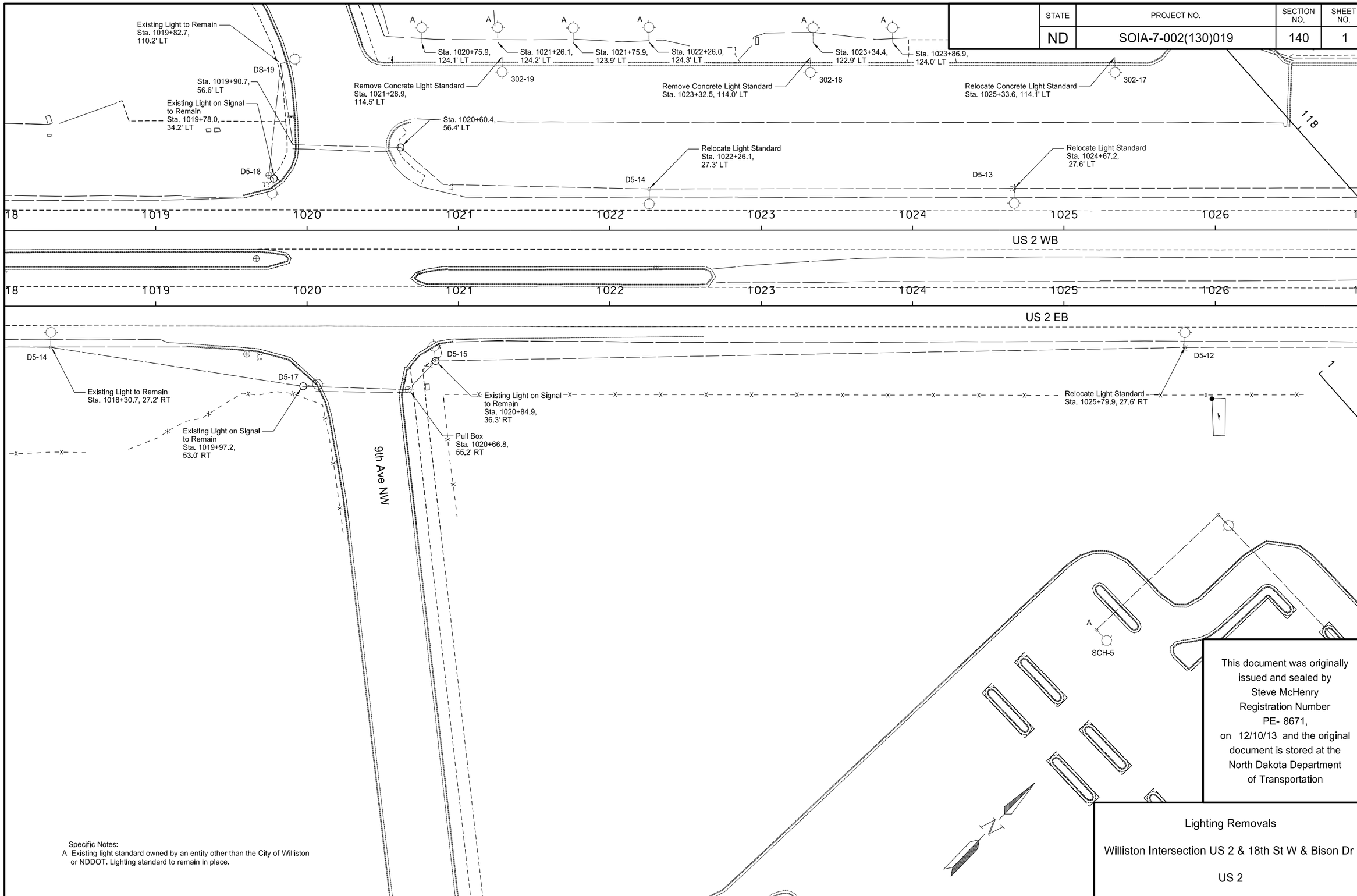

Specific Notes:
A Existing light standard owned by an entity other than the City of Williston or NDDOT. Lighting standard to remain in place.

This document was originally issued and sealed by Steve McHenry Registration Number PE- 8671, on 12/10/13 and the original document is stored at the North Dakota Department of Transportation

Lighting Removals

Williston Intersection US 2 & 18th St W & Bison Dr

US 2

STATE	PROJECT NO.	SECTION NO.	SHEET NO.
ND	SOIA-7-002(130)019	140	2

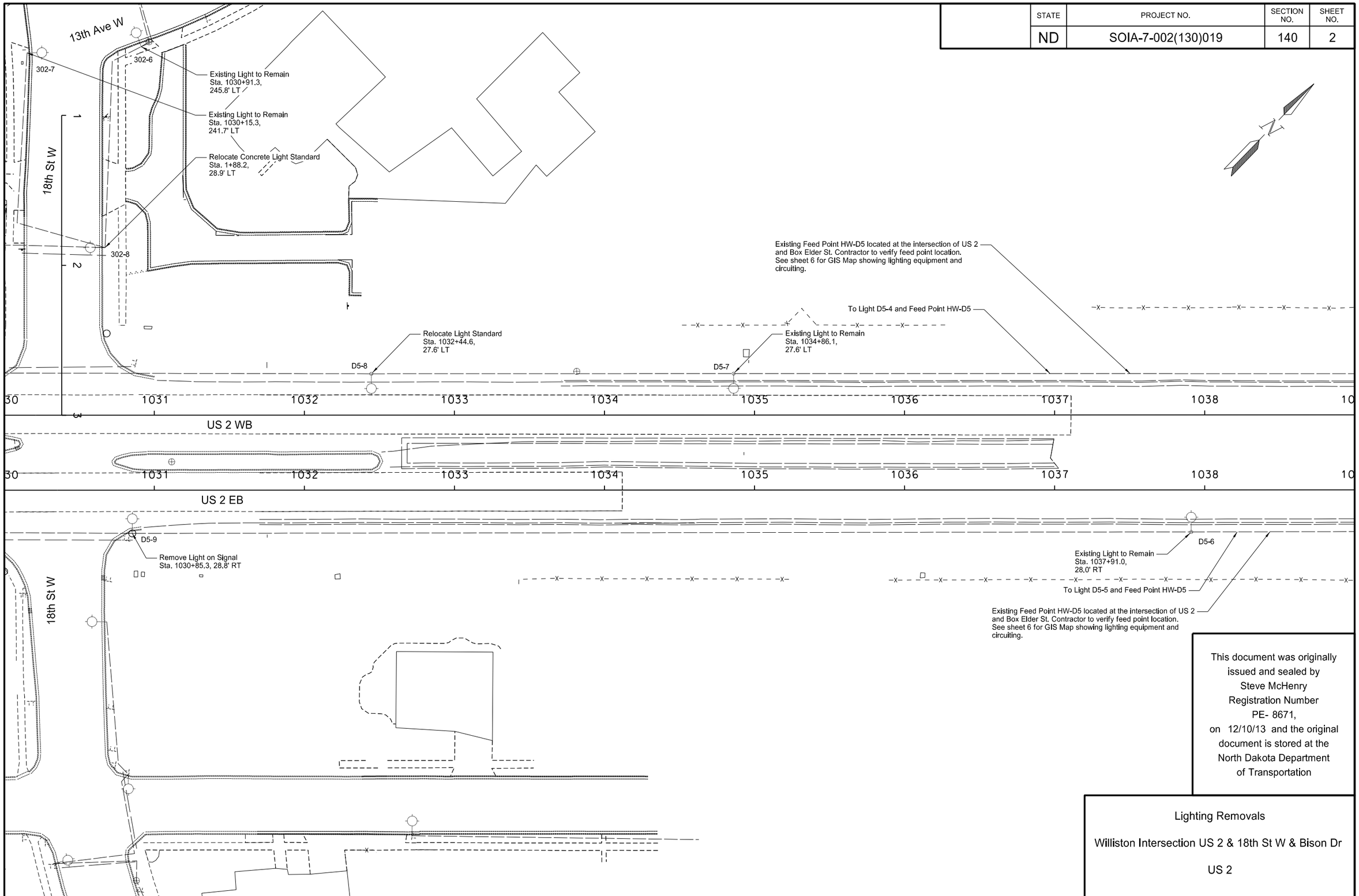

This document was originally issued and sealed by Steve McHenry Registration Number PE- 8671, on 12/10/13 and the original document is stored at the North Dakota Department of Transportation

Lighting Removals

Williston Intersection US 2 & 18th St W & Bison Dr

US 2

STATE	PROJECT NO.	SECTION NO.	SHEET NO.
ND	SOIA-7-002(130)019	140	3

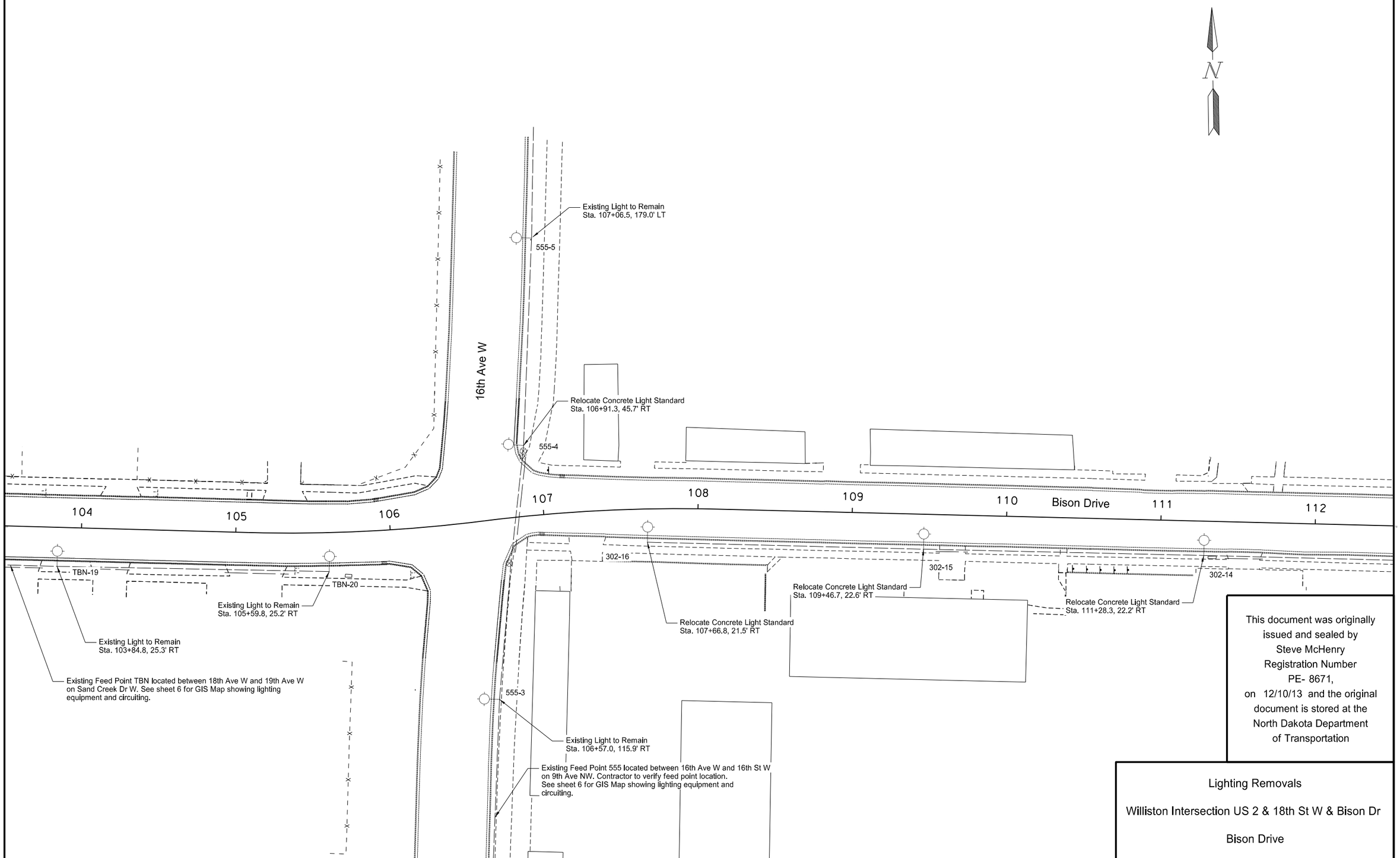

This document was originally issued and sealed by Steve McHenry Registration Number PE- 8671, on 12/10/13 and the original document is stored at the North Dakota Department of Transportation

Lighting Removals

Williston Intersection US 2 & 18th St W & Bison Dr

Bison Drive

STATE	PROJECT NO.	SECTION NO.	SHEET NO.
ND	SOIA-7-002(130)019	140	4

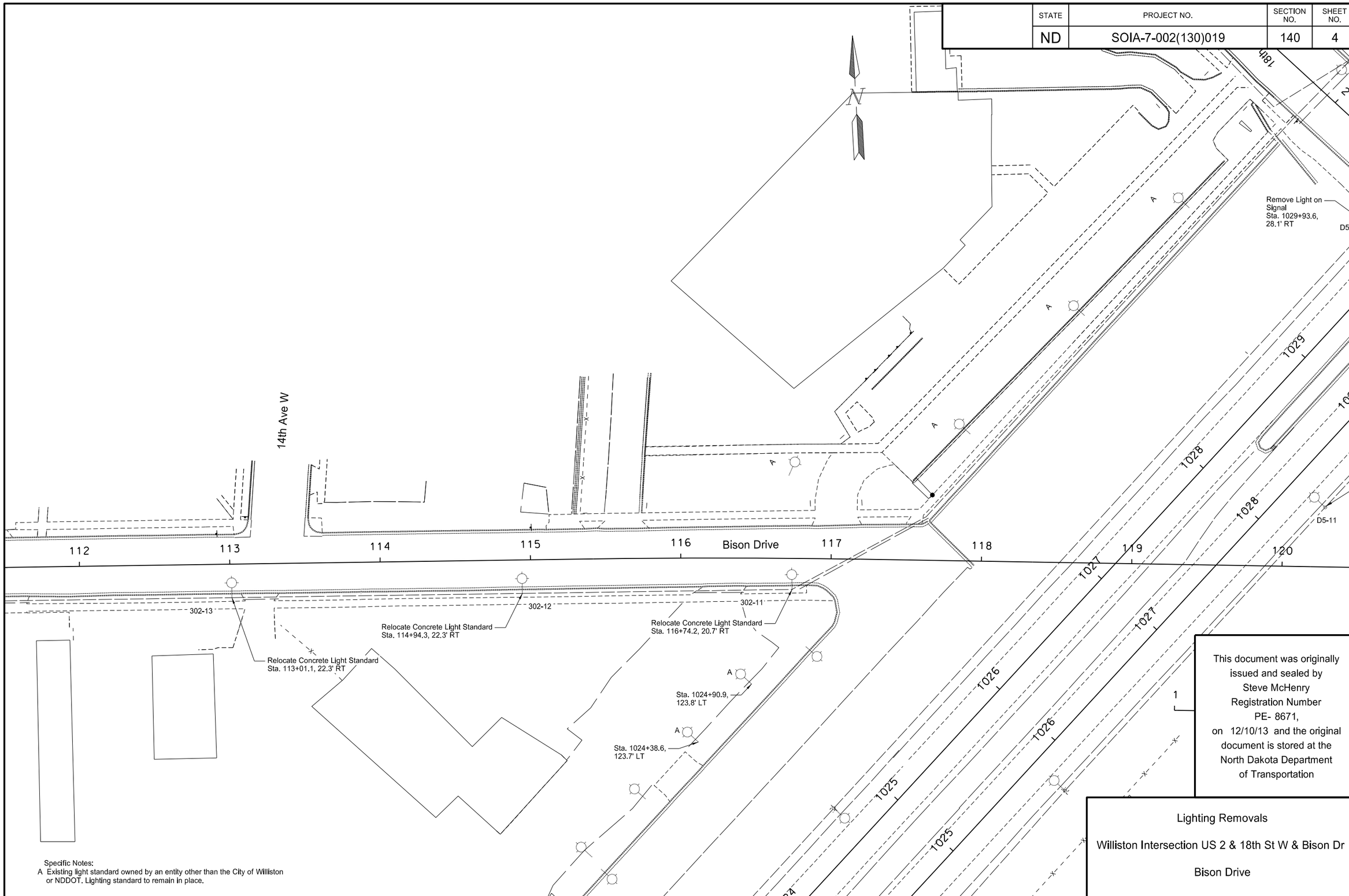

Specific Notes:
A Existing light standard owned by an entity other than the City of Williston or NDDOT. Lighting standard to remain in place.

This document was originally issued and sealed by Steve McHenry Registration Number PE- 8671, on 12/10/13 and the original document is stored at the North Dakota Department of Transportation

Lighting Removals

Williston Intersection US 2 & 18th St W & Bison Dr

Bison Drive

STATE	PROJECT NO.	SECTION NO.	SHEET NO.
ND	SOIA-7-002(130)019	140	5

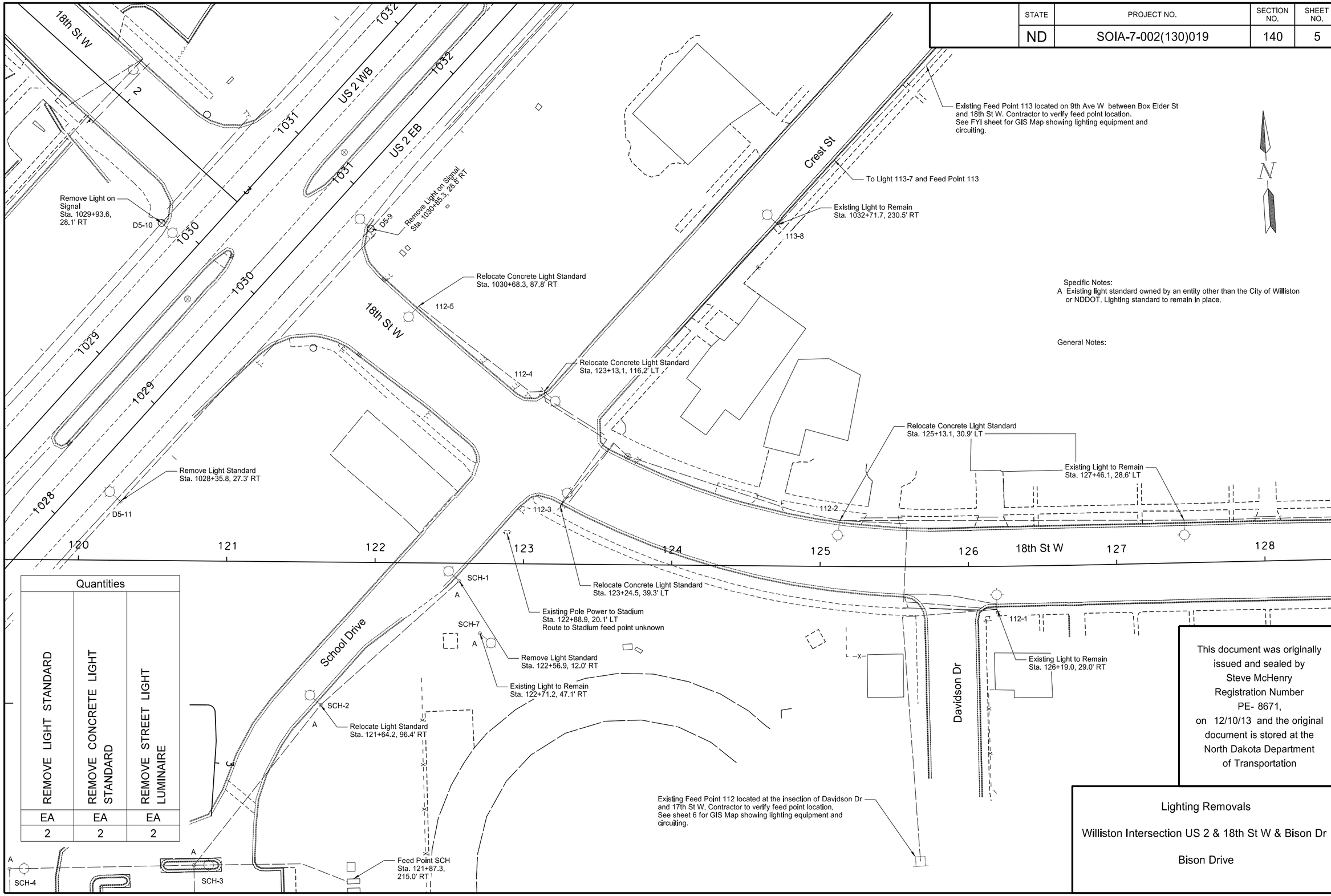

Specific Notes:

A Existing light standard owned by an entity other than the City of Williston or NDDOT. Lighting standard to remain in place.

General Notes:

Quantities

REMOVE LIGHT STANDARD	REMOVE CONCRETE LIGHT STANDARD	REMOVE STREET LIGHT LUMINAIRE
EA	EA	EA
2	2	2

This document was originally issued and sealed by Steve McHenry Registration Number PE- 8671, on 12/10/13 and the original document is stored at the North Dakota Department of Transportation

Lighting Removals

Williston Intersection US 2 & 18th St W & Bison Dr

Bison Drive

STATE	PROJECT NO.	SECTION NO.	SHEET NO.
ND	SOIA-7-002(130)019	140	6

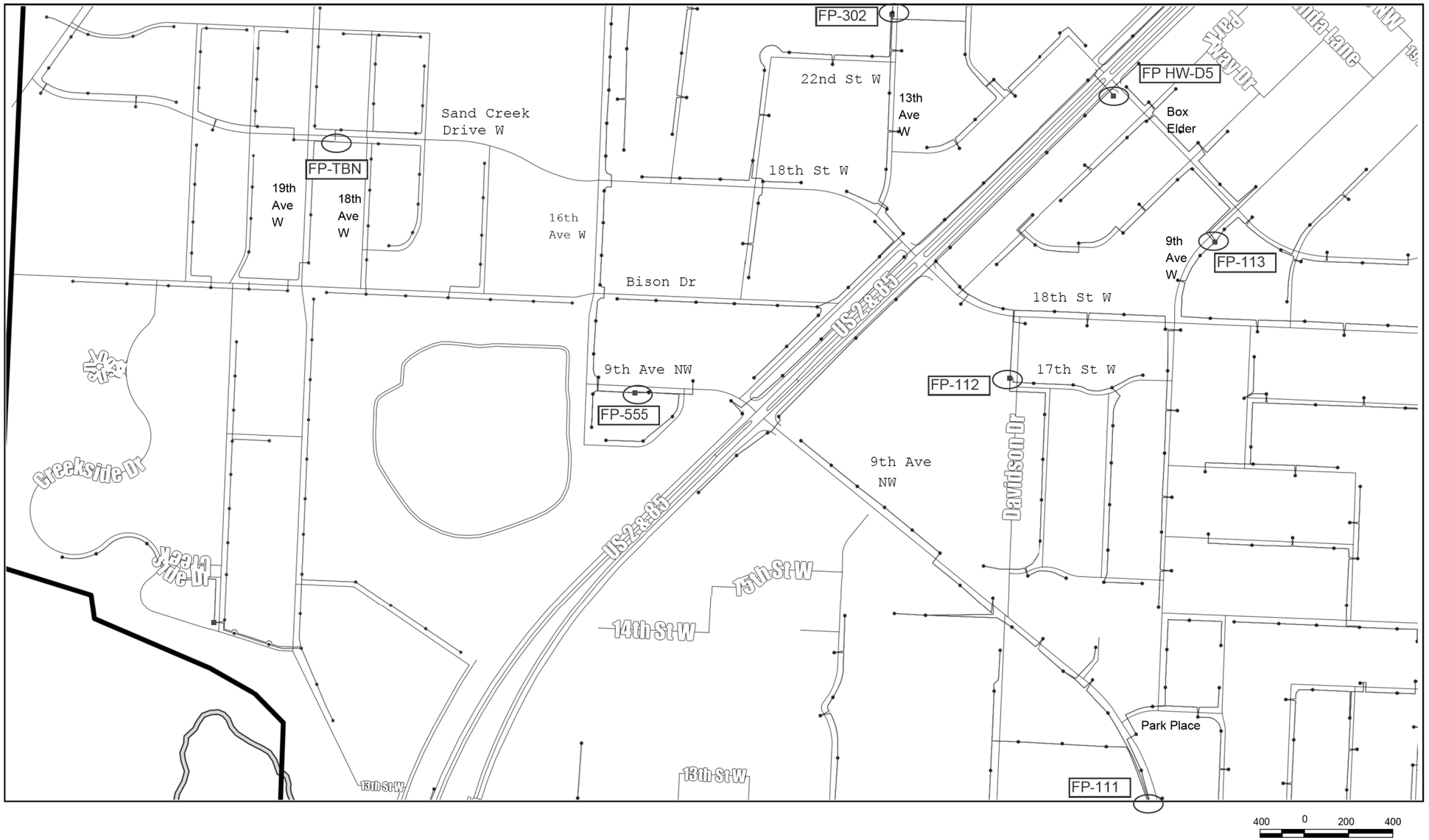

This document was originally issued and sealed by Steve McHenry Registration Number PE- 8671, on 12/10/13 and the original document is stored at the North Dakota Department of Transportation

Lighting

Williston Intersection US 2 & 18th St W & Bison Dr

US 2
For Information Only
GIS Map

STATE	PROJECT NO.	SECTION NO.	SHEET NO.
ND	SOIA-7-002(130)019	140	7

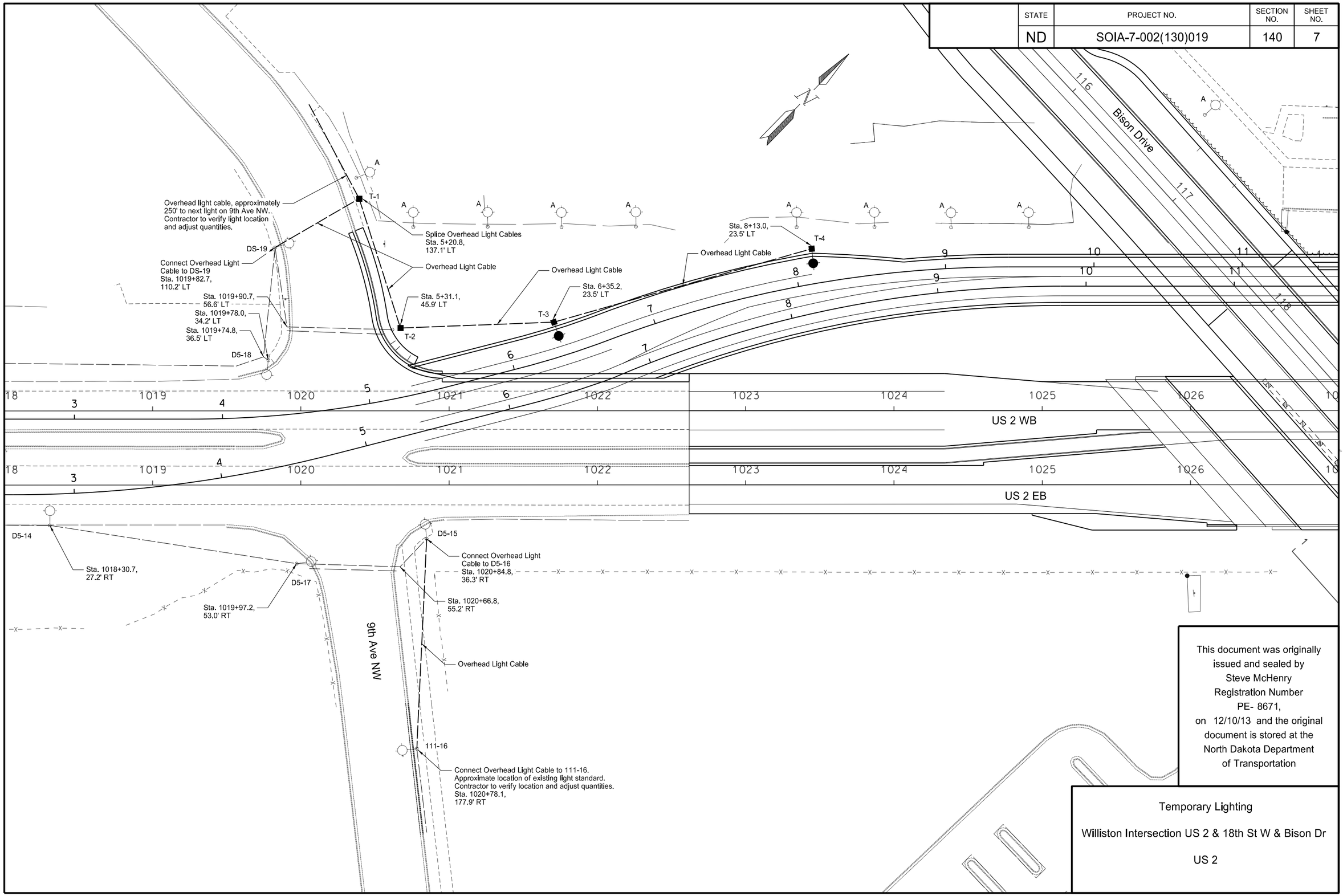

This document was originally issued and sealed by Steve McHenry Registration Number PE- 8671, on 12/10/13 and the original document is stored at the North Dakota Department of Transportation

Temporary Lighting

Williston Intersection US 2 & 18th St W & Bison Dr

US 2

STATE	PROJECT NO.	SECTION NO.	SHEET NO.
ND	SOIA-7-002(130)019	140	8

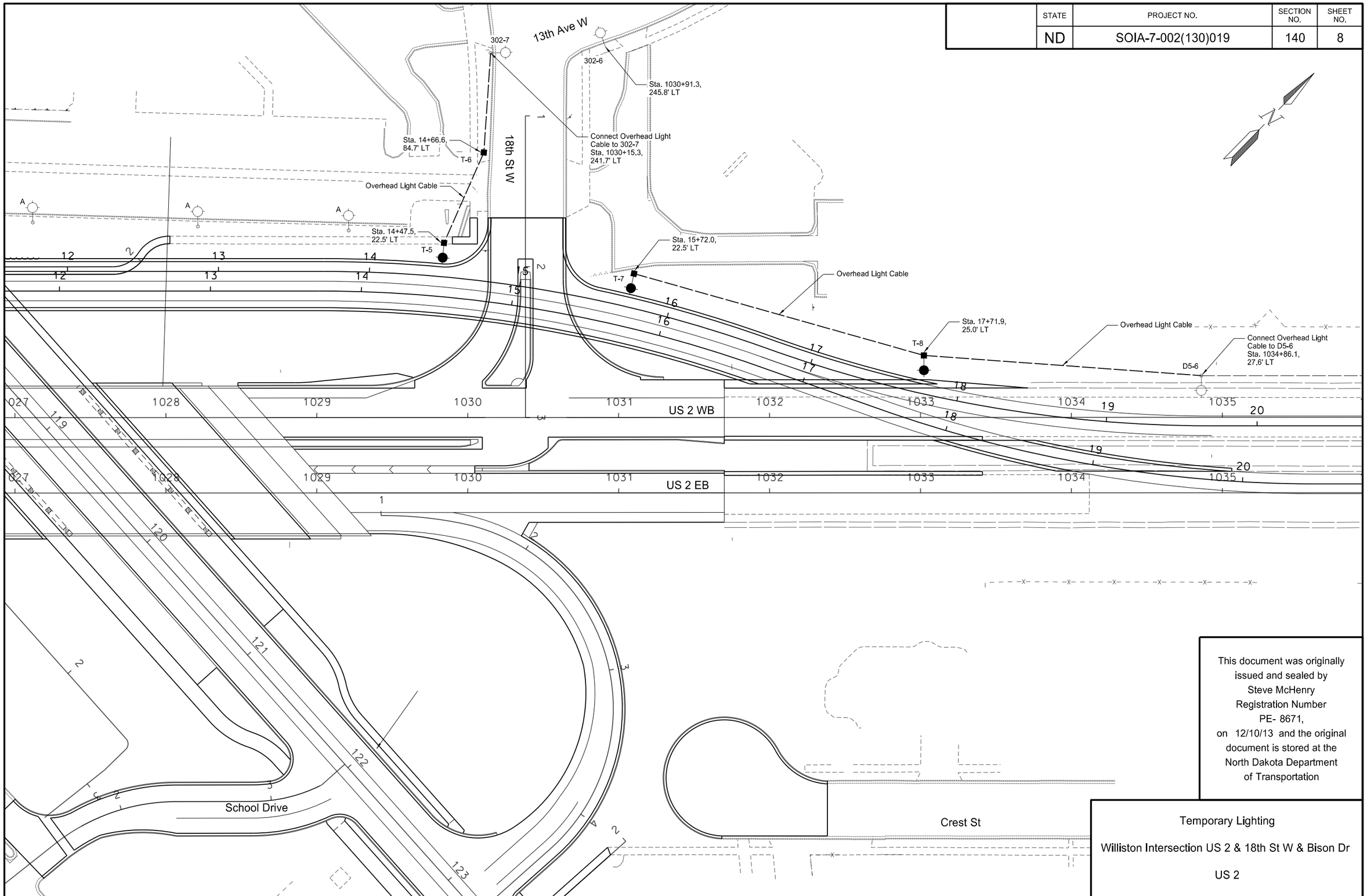

This document was originally issued and sealed by Steve McHenry Registration Number PE- 8671, on 12/10/13 and the original document is stored at the North Dakota Department of Transportation

Temporary Lighting

Williston Intersection US 2 & 18th St W & Bison Dr

US 2

12/11/2013 6:29:33 AM trichardson I:\Projects\7874\70002019.130\Design\Plan\140LT_008_LTEMPLIGHT.dgn

STATE	PROJECT NO.	SECTION NO.	SHEET NO.
ND	SOIA-7-002(130)019	140	9

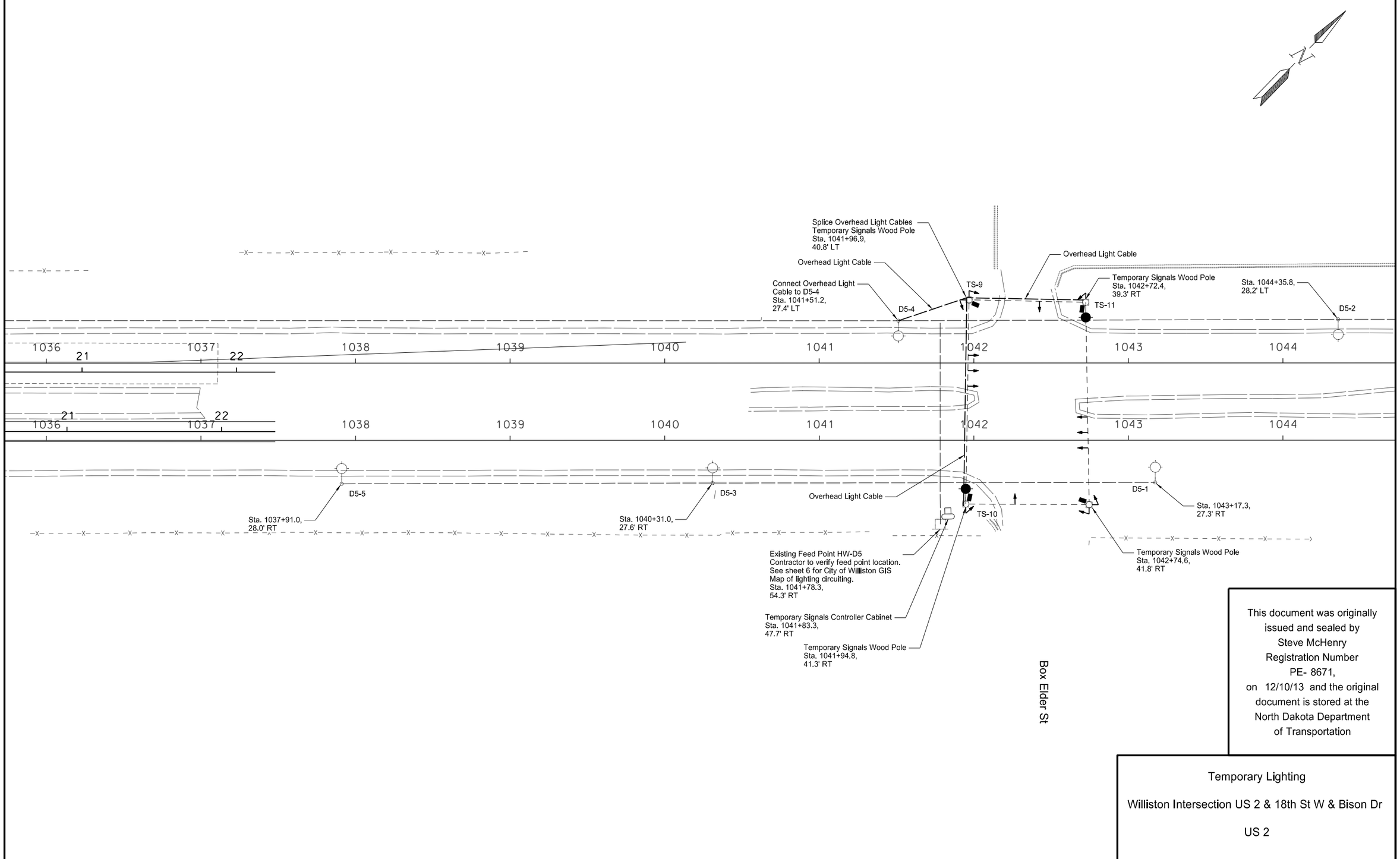

This document was originally issued and sealed by Steve McHenry Registration Number PE- 8671, on 12/10/13 and the original document is stored at the North Dakota Department of Transportation

Temporary Lighting

Williston Intersection US 2 & 18th St W & Bison Dr

US 2

STATE	PROJECT NO.	SECTION NO.	SHEET NO.
ND	SOIA-7-002(130)019	140	10

Station	Conduit Runs		Cable Runs	
	Length (ft)	Size	Length (ft)	Type
5+01.1 - 350' LT TO			450	OVERHEAD CABLE 2NO6
5+20.8 - 137.1' LT				
5+20.8 - 137.1' LT TO			225	OVERHEAD CABLE 2NO6
5+31.1 - 45.9' LT TO				
6+35.2 - 23.5' LT				
6+35.2 - 23.5' LT TO			210	OVERHEAD CABLE 2NO6
8+13.0 - 23.5' LT				
5+20.8 - 137.1' LT TO			140	OVERHEAD CABLE 2NO6
1019+82.7 - 110.2' LT				
1030+15.3 - 241.7' LT			230	OVERHEAD CABLE 2NO6
14+66.6 - 84.7' LT TO				
14+47.5 - 22.5' LT TO				
1034+86.1 - 27.6' LT TO			245	OVERHEAD CABLE 2NO6
17+71.9 - 25.0' LT				
17+71.9 - 25.0' LT TO			230	OVERHEAD CABLE 2NO6
15+72.0 - 22.5' LT				
1041+51.2 - 27.4' LT TO			185	OVERHEAD CABLE 2NO6
1041+96.9 - 40.8' LT TO				
1041+94.8 - 41.3' RT				
1041+96.9 - 40.8' LT TO			95	OVERHEAD CABLE 2NO6
1042+72.4 - 39.3' LT				

Wood Pole Light Standards							
No.	Station	Offset	Wattage	IES-Type	Height	Pole Length	Mast Arm
T-1	5+20.8	137.1' LT				50'	
T-2	5+31.1	45.9' LT			40'	50'	
T-3	6+35.2	23.5' LT	250	3	40'	50'	6'
T-4	8+13.0	23.5' LT	250	3	40'	50'	6'
T-5	14+47.5	22.5' LT	250	3	40'	50'	6'
T-6	14+66.6	84.7' LT				50'	
T-7	15+72.0	22.5' LT	250	3	40'	50'	6'
T-8	17+71.9	25.0' LT	250	3	40'	50'	6'
TS-9	1041+96.9	40.8' LT				SIGNAL POLE	
TS-10	1041+94.8	41.3' RT	250	3	40'	SIGNAL POLE	6'
TS-11	1042+72.4	39.3' LT	250	3	40'	SIGNAL POLE	6'

Quantities (A)					
50FT WOOD SERVICE POLE	OVERHEAD LIGHT CABLE - 2 NO6, PLUS MESSENGER CABLE	WOOD POLE MOUNTED 6FT MAST ARM	HP SODIUM VAPOR LUMINAIRE-250 WATT	REMOVE TEMPORARY LIGHTING SYSTEM	TEMPORARY LIGHTING SYSTEM
EA	LF	LF	EA	EA	EA
8	2010	7	7	1	1

(A) These items shall not be bid separately but shall be included in the item "Temporary Lighting System".

This document was originally issued and sealed by Steve McHenry Registration Number PE- 8671, on 12/10/13 and the original document is stored at the North Dakota Department of Transportation

Temporary Lighting

Williston Intersection US 2 & 18th St W & Bison Dr

US 2

STATE	PROJECT NO.	SECTION NO.	SHEET NO.
ND	SOIA-7-002(130)019	140	11

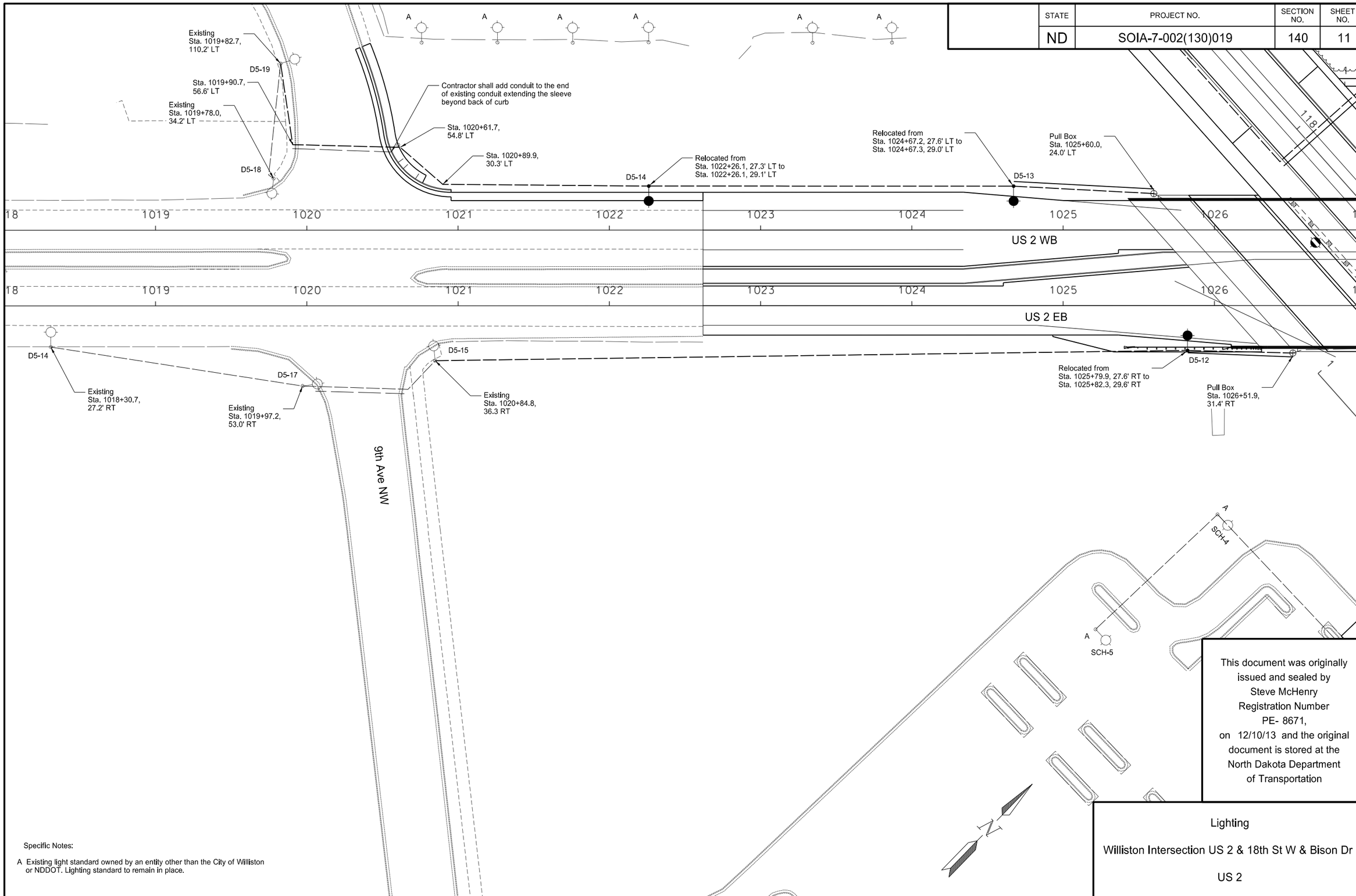

This document was originally issued and sealed by Steve McHenry Registration Number PE- 8671, on 12/10/13 and the original document is stored at the North Dakota Department of Transportation

Lighting

Williston Intersection US 2 & 18th St W & Bison Dr

US 2

Specific Notes:

A Existing light standard owned by an entity other than the City of Williston or NDDOT. Lighting standard to remain in place.

STATE	PROJECT NO.	SECTION NO.	SHEET NO.
ND	SOIA-7-002(130)019	140	12

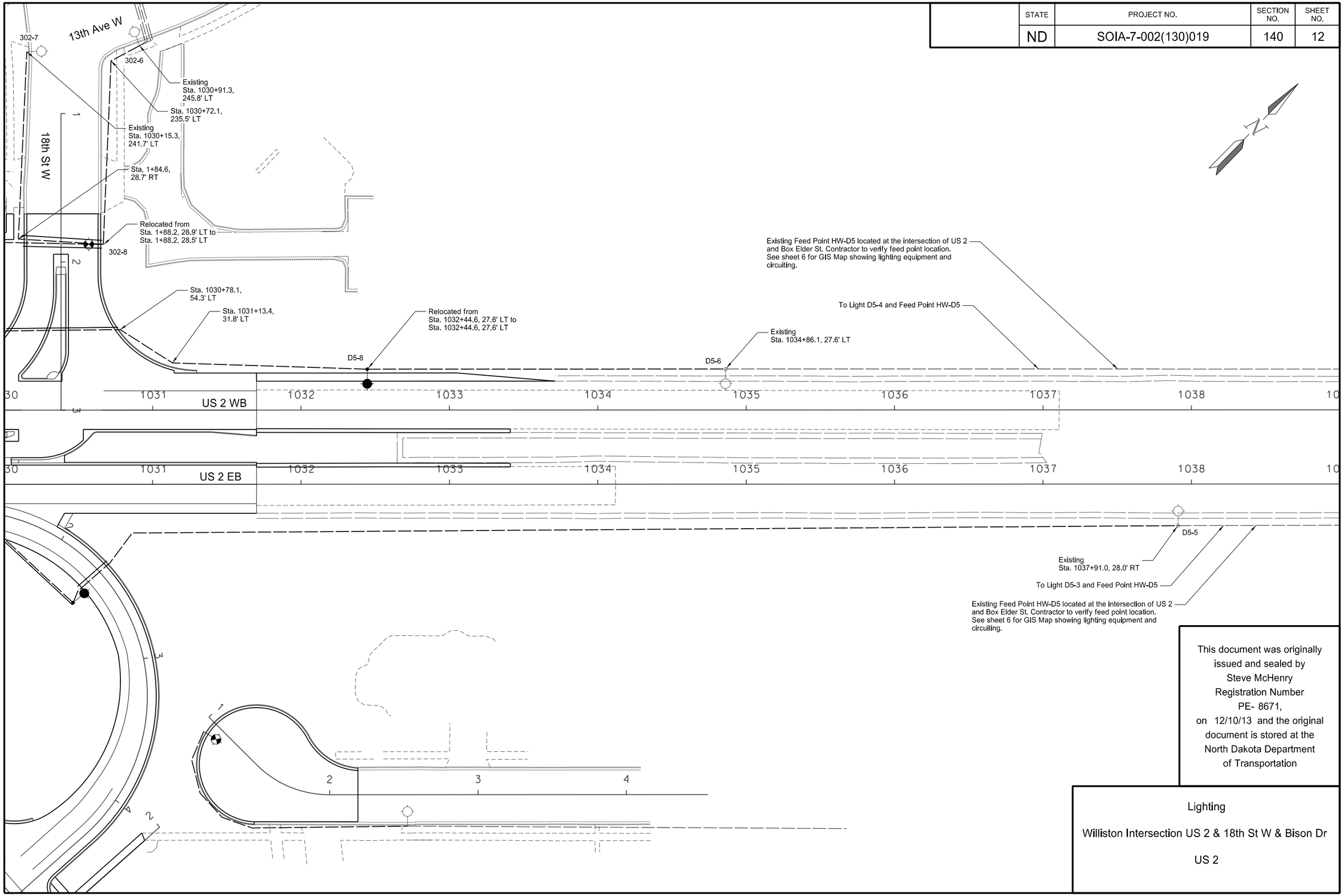

This document was originally issued and sealed by Steve McHenry Registration Number PE- 8671, on 12/10/13 and the original document is stored at the North Dakota Department of Transportation

Lighting

Williston Intersection US 2 & 18th St W & Bison Dr

US 2

STATE	PROJECT NO.	SECTION NO.	SHEET NO.
ND	SOIA-7-002(130)019	140	13

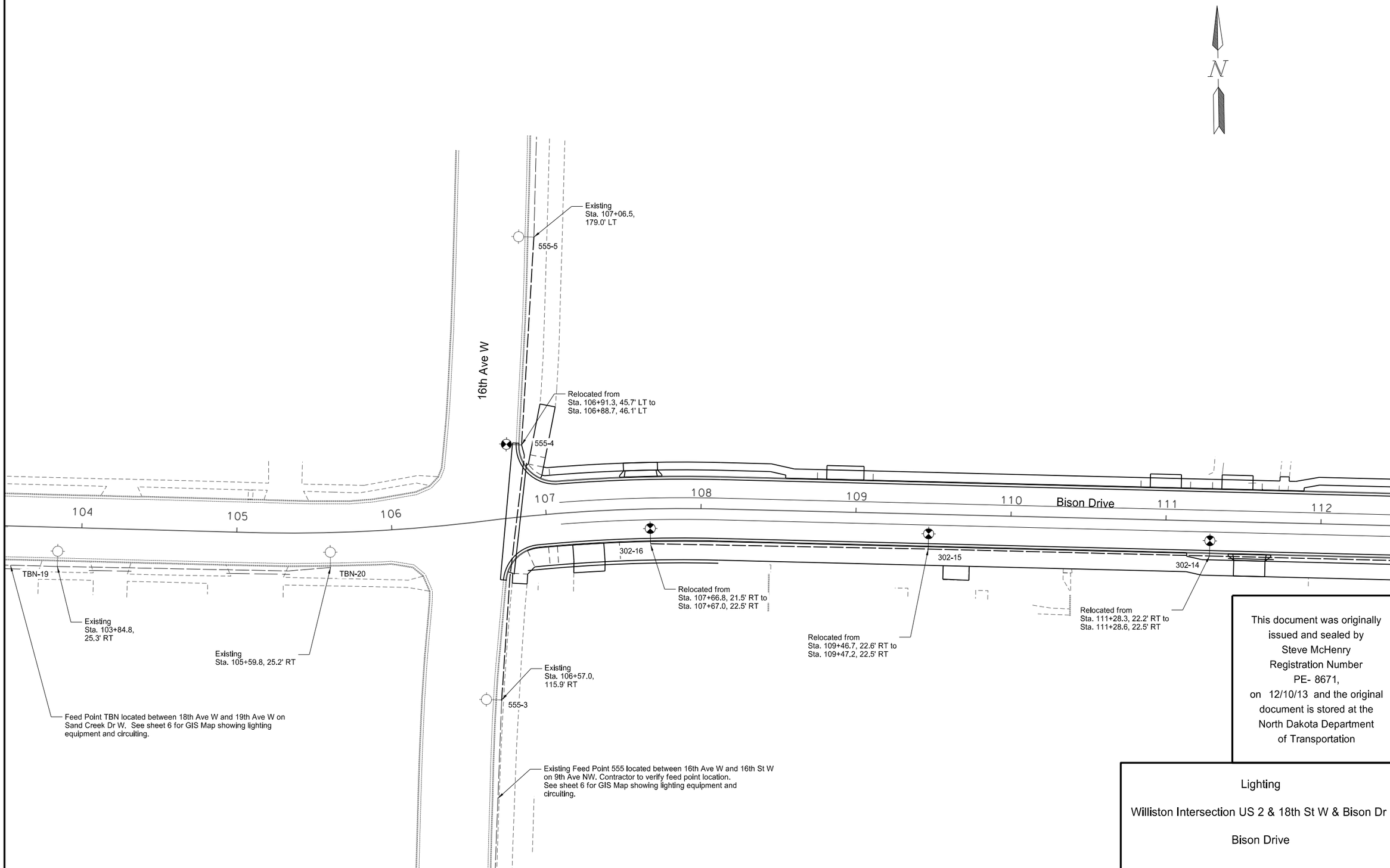

This document was originally issued and sealed by Steve McHenry Registration Number PE- 8671, on 12/10/13 and the original document is stored at the North Dakota Department of Transportation

Lighting

Williston Intersection US 2 & 18th St W & Bison Dr

Bison Drive

STATE	PROJECT NO.	SECTION NO.	SHEET NO.
ND	SOIA-7-002(130)019	140	14

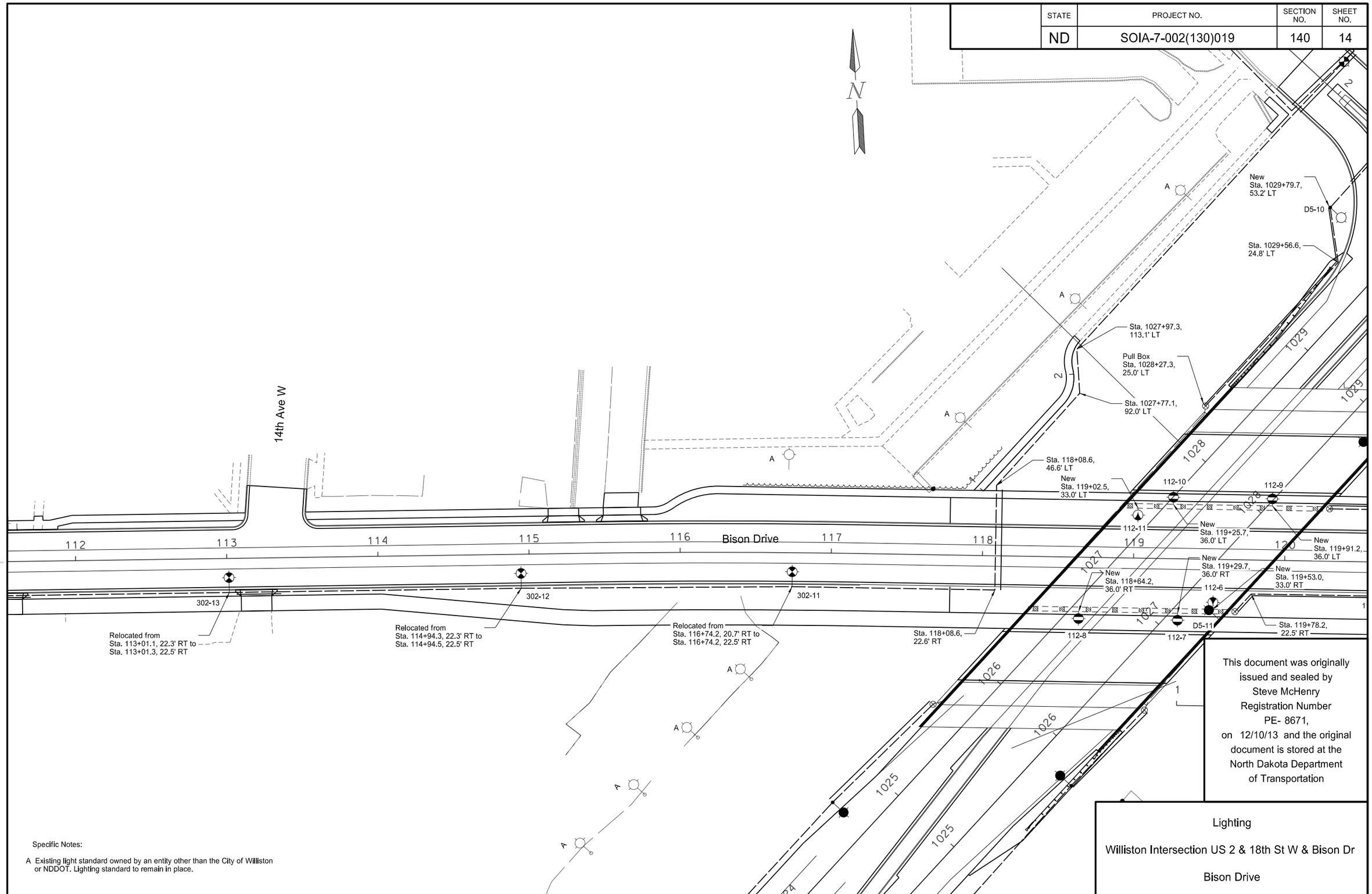

This document was originally issued and sealed by Steve McHenry Registration Number PE- 8671, on 12/10/13 and the original document is stored at the North Dakota Department of Transportation

Lighting

Williston Intersection US 2 & 18th St W & Bison Dr

Bison Drive

Specific Notes:

A Existing light standard owned by an entity other than the City of Williston or NDDOT. Lighting standard to remain in place.

STATE	PROJECT NO.	SECTION NO.	SHEET NO.
ND	SOIA-7-002(130)019	140	15

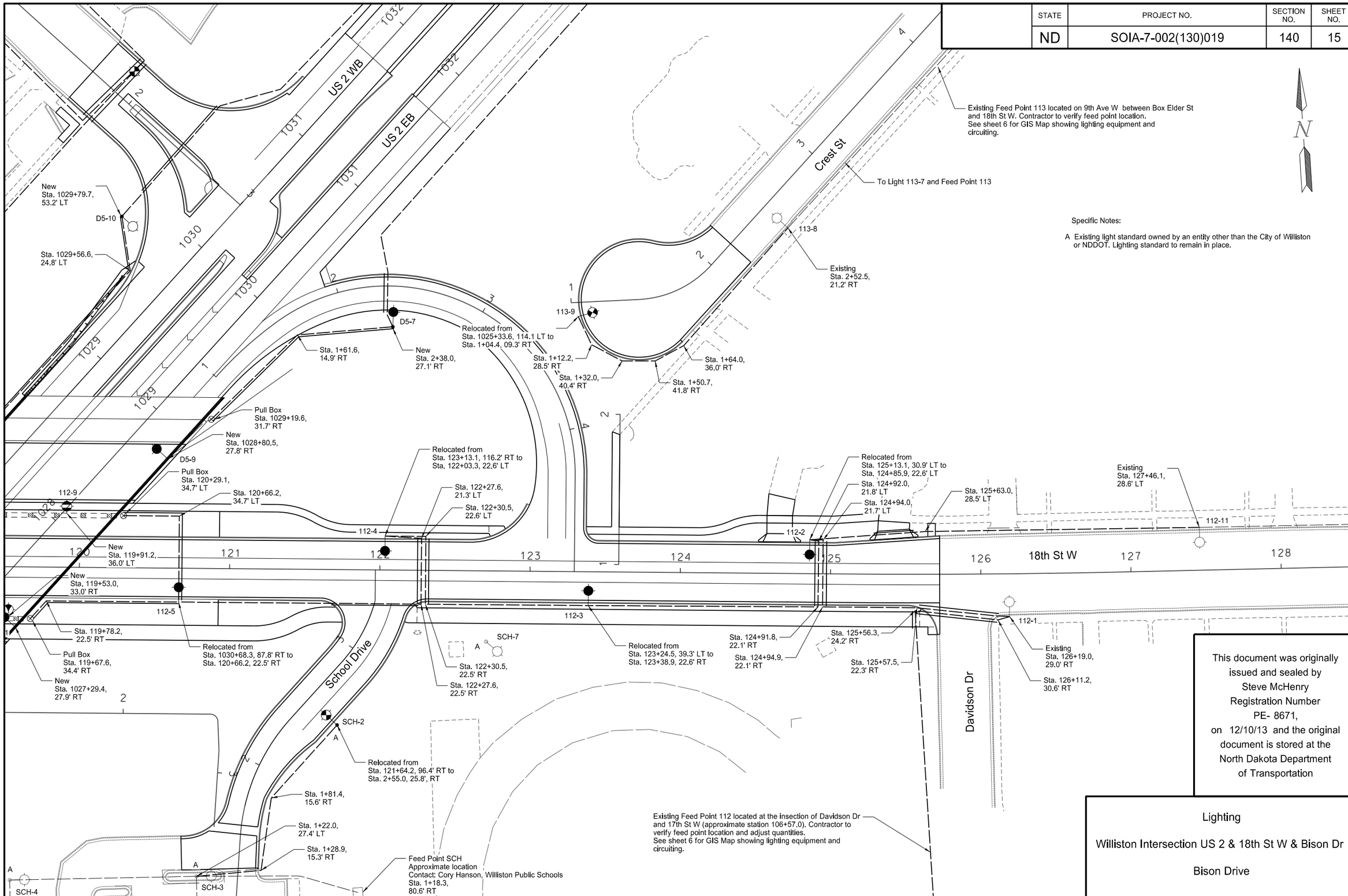

Specific Notes:

A Existing light standard owned by an entity other than the City of Williston or NDDOT. Lighting standard to remain in place.

This document was originally issued and sealed by Steve McHenry Registration Number PE- 8671, on 12/10/13 and the original document is stored at the North Dakota Department of Transportation

Lighting

Williston Intersection US 2 & 18th St W & Bison Dr

Bison Drive

STATE	PROJECT NO.	SECTION NO.	SHEET NO.
ND	SOIA-7-002(130)019	140	16

Station	Conduit Runs		Cable Trench	Cable Runs	
	Length (ft)	Size	Length (ft)	Length (ft)	Type
1030+91.3 - 245.8' LT TO			146	462	3-1/C #4 RHW
1030+72.1 - 235.5' LT TO				154	1-1/C #6 THW
1+88.2 - 28.5' LT					
1+88.2 - 28.5' LT TO	54	2"	585	1779	3-1/C #4 RHW
1027+97.3 - 113.1' LT TO				593	1-1/C #6 THW
1027+77.1 - 92.0' LT TO					
118+08.6 - 46.6' LT TO	67	2"			
118+08.6 - 22.6' RT TO					
116+74.2 - 22.5' RT					
116+74.2 - 22.5' RT TO			180	564	3-1/C #4 RHW
114+94.5 - 22.5' RT				188	1-1/C #6 THW
114+94.5 - 22.5' RT TO	30	2"	194	606	3-1/C #4 RHW
113+01.3 - 22.5' RT				202	1-1/C #6 THW
113+01.3 - 22.5' RT TO	30	2"	173	543	3-1/C #4 RHW
111+28.6 - 22.5' RT				181	1-1/C #6 THW
111+28.6 - 22.5' RT TO			182	570	3-1/C #4 RHW
109+47.2 - 22.5' RT				190	1-1/C #6 THW
109+47.2 - 22.5' RT TO			180	564	3-1/C #4 RHW
107+67.0 - 22.5' RT				188	1-1/C #6 THW
1+88.2 - 28.5' LT TO	54	2"	185	555	3-1/C #4 RHW
1+84.6 - 28.7' RT TO				185	1-1/C #6 THW
1030+15.3 - 241.7' LT					

No.	Station	Offset	Wattage	Circuit	IES-Type	Pole Ht.	Mast Arm	Note
8	1+88.2	28.5' RT	150	1				RELO
11	116+74.2	22.5' RT	150	2				RELO
12	114+94.5	22.5' RT	150	1				RELO
13	113+01.3	22.5' RT	150	2				RELO
14	111+28.6	22.5' RT	150	1				RELO
15	109+47.2	22.5' RT	150	2				RELO
16	107+67.0	22.5' RT	150	1				RELO

Quantities				
RELOCATE CONCRETE LIGHT STANDARD	CABLE TRENCH I	2IN DIAMETER RIGID CONDUIT	UNDERGROUND CONDUCTOR NO4-TYPE RHW	UNDERGROUND CONDUCTOR NO6-TYPE THW
EA	LF	LF	LF	LF
7	1825	235	5643	1881

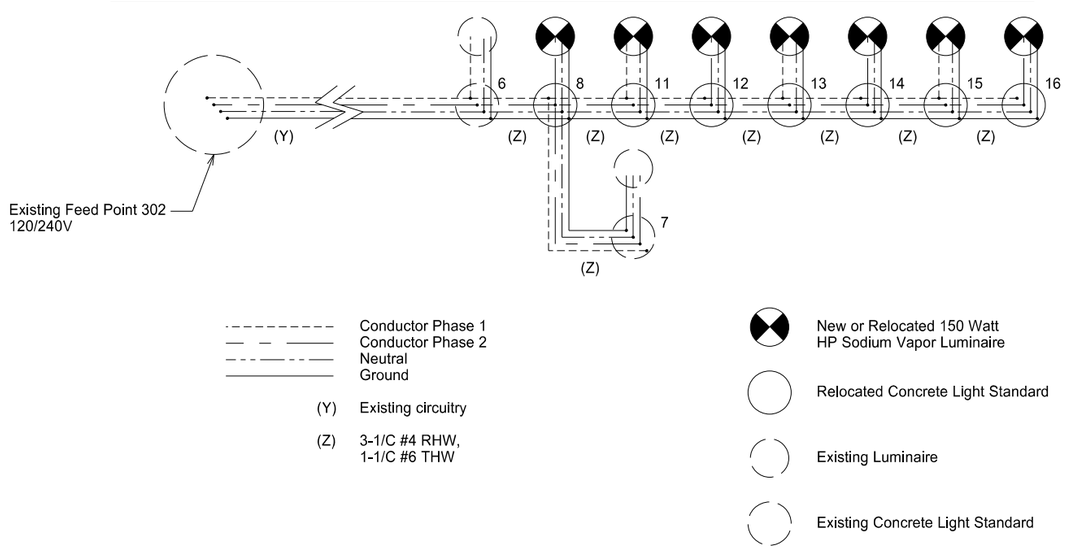

This document was originally issued and sealed by Steve McHenry Registration Number PE- 8671, on 12/10/13 and the original document is stored at the North Dakota Department of Transportation

Lighting

Williston Intersection US 2 & 18th St W & Bison Dr

US 2
Feed Point 302

STATE	PROJECT NO.	SECTION NO.	SHEET NO.
ND	SOIA-7-002(130)019	140	17

Station	Conduit Runs		Cable Trench	Cable Runs	
	Length (ft)	Size	Length (ft)	Length (ft)	Type
1037+91.0 - 28.0' RT TO	27	2"	768	2328	3-1/C #4 RHW
2+38.0 - 27.1' RT				776	1-1/C #6 THW
2+38.0 - 27.1' RT TO	144	2"	144	576	3-1/C #4 RHW
1+61.6 - 14.9' RT TO				192	1-1/C #6 THW
1029+19.6 - 31.7' RT TO					
1028+80.5 - 27.8' RT					
1028+80.5 - 27.8' RT TO				480	3-1/C #4 RHW
1027+29.4 - 27.8' RT				160	1-1/C #6 THW
1027+29.4 - 27.8' RT TO	70	2"	70	468	3-1/C #4 RHW
1026+51.9 - 31.4' RT TO				156	1-1/C #6 THW
1025+82.3 - 29.6' RT					
1025+82.2 - 28.6' RT TO			498	1518	3-1/C #4 RHW
1020+84.8 - 36.3' RT				506	1-1/C #6 THW
1034+86.1 - 27.6' LT TO			242	750	3-1/C #4 RHW
1032+44.6 - 27.6' LT				250	1-1/C #6 THW
1032+44.6 - 27.6' LT TO			272	840	3-1/C #4 RHW
1031+13.4 - 31.8' LT TO				280	1-1/C #6 THW
1030+78.1 - 54.3' LT TO	76	2"			
1029+79.7 - 53.2' LT					
1029+79.7 - 53.2' LT TO	166	2"	259	1611	3-1/C #4 RHW
1029+56.6 - 24.8' LT TO				537	1-1/C #6 THW
1028+27.3 - 25.0' LT TO					
1025+60.0 - 24.0' LT TO	93	2"			
1024+67.3 - 29.0' LT					
1024+67.3 - 29.0' LT TO			242	750	3-1/C #4 RHW
1022+26.1 - 29.1' LT				250	1-1/C #6 THW
1022+26.1 - 29.1' LT TO	10	2"	300	924	3-1/C #4 RHW
1020+89.9 - 30.3' LT TO				308	1-1/C #6 THW
1020+61.7 - 54.8' LT TO					
1019+90.7 - 56.6' LT TO					
1019.82.7 - 110.2' LT					

No.	Station	Offset	Wattage	Circuit	IES-Type	Pole Ht.	Mast Arm	Note
7	1030+46.3	79.8' RT	250	1	3	40	8'	
9	1028+80.5	27.8' RT	250	1	3	40	8'	
11	1027+29.4	27.9' RT	250	1	3	40	8'	
12	1025+82.3	29.6' RT	250	1				RELO
8	1032+44.6	27.6' LT	250	2				RELO
10	1029+79.7	53.2' LT	400	2	3	40	8'	
13	1024+67.3	29.0' LT	250	2				RELO
14	1022.26.1	29.1' LT	250	2				RELO

Quantities								
CONCRETE FOUNDATION-HIGHWAY LIGHTING	LT STD 8FT MA 40FT MT HT BREAKAWAY	RELOCATE LIGHT STANDARD	CABLE TRENCH I	2IN DIAMETER RIGID CONDUIT	UNDERGROUND CONDUCTOR NO4-TYPE RHW	UNDERGROUND CONDUCTOR NO6-TYPE THW	HP SODIUM VAPOR LUMINAIRE-250 WATT	HP SODIUM VAPOR LUMINAIRE-400 WATT
EA	EA	EA	LF	LF	LF	LF	EA	EA
6	4	4	2795	586	10245	3415	3	1

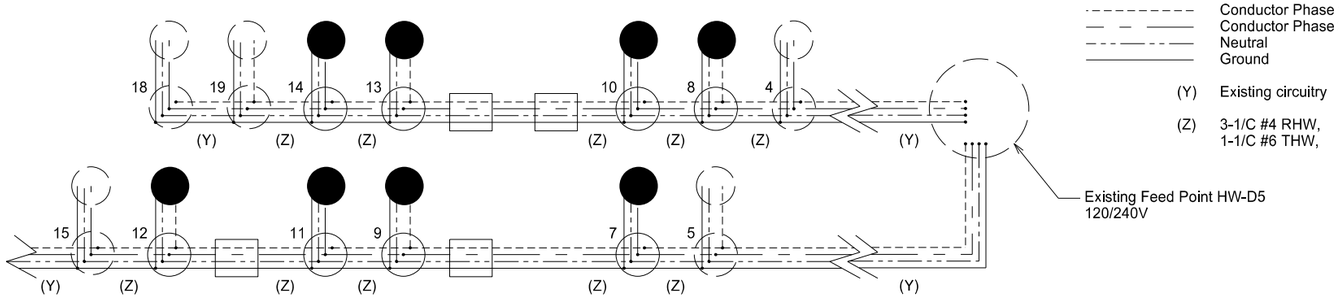

Conductor Phase 1
Conductor Phase 2
Neutral
Ground

(Y) Existing circuitry

(Z) 3-1/C #4 RHW,
1-1/C #6 THW,

New or Relocated 250 Watt HP Sodium Vapor Luminaire

New or Relocated Light Standard

Existing Luminaire

Existing Light Standard

Pull Box

This document was originally issued and sealed by Steve McHenry Registration Number PE- 8671, on 12/10/13 and the original document is stored at the North Dakota Department of Transportation

Lighting

Williston Intersection US 2 & 18th St W & Bison Dr

US 2
Feed Point HW-D5

STATE	PROJECT NO.	SECTION NO.	SHEET NO.
ND	SOIA-7-002(130)019	140	18

Station	Conduit Runs		Cable Trench	Cable Runs	
	Length (ft)	Size	Length (ft)	Length (ft)	Type
106+57.0 TO	12	2"	300	942	3-1/C #4 RHW
125+56.3 - 24.2' RT TO	54	2"		314	1-1/C #6 THW
126+11.2 - 30.6' RT TO					
126+19.0 - 29.0' RT					
126+19.0 - 29.0' RT TO	54	2"	179	561	3-1/C #4 RHW
125+57.5 - 22.3' RT TO				187	1-1/C #6 THW
124+94.9 - 22.1' RT TO	44	2"			
124+94.0 - 21.7' LT TO					
124+85.9 - 22.6' LT					
124+85.9 - 22.6' LT TO			203	633	3-1/C #4 RHW
124+92.0 - 21.8' LT TO	44	2"		211	1-1/C #6 THW
124+91.8' - 22.1' RT TO					
123+38.9 - 22.6' RT					
123+38.9 - 22.6' RT TO			181	567	3-1/C #4 RHW
122+30.5 - 22.5' RT TO	44	2"		189	1-1/C #6 THW
122+30.5 - 22.6' LT TO					
122+03.3 - 22.6' LT					
122+03.3 - 22.6' LT TO			231	717	3-1/C #4 RHW
122+27.6 - 21.3' LT TO	44	2"		239	1-1/C #6 THW
122+27.6' - 22.5' RT TO	58	2"			
120+66.2 - 22.5' RT					
120+66.2 - 22.5' RT TO	102	2"	102		NOTE 1
119+78.2 - 22.5' RT					
119+67.6 - 34.4' RT					
120+66.2 - 22.5' RT TO	94	2"	94		NOTE 1
120+66.2 - 34.7' LT TO					
120+29.1 - 34.7' LT					
124+85.9 - 22.6' LT TO	27	2"	260	804	3-1/C #4 RHW
125+63.0 - 28.5' LT TO	22	2"		268	1-1/C #6 THW
127+46.1 - 28.6' LT					

NOTE 1: SEE UNDERPASS LIGHTING DETAILS FOR CABLE RUNS AND QUANTITIES

No.	Station	Offset	Wattage	Circuit	IES-Type	Pole Ht.	Mast Arm	Note
1	126+19.0	29.0' RT	250	1				EXISTING
2	124+85.9	22.6' LT	250	2				RELO
3	123+38.9	22.6' RT	250	1				RELO
4	122+03.3	22.6' LT	250	2				RELO
5	120+66.2	22.5' RT	250	1				RELO
6	119+53.0	33.0' RT	70	1				NOTE 1
7	119+29.7	36.0' RT	35	2				NOTE 1
8	118+64.2	36.0' RT	35	1				NOTE 1
9	119+91.2	36.0' LT	35	2				NOTE 1
10	119+91.2	36.0' LT	35	1				NOTE 1
11	119+02.5	33.0' LT	70	2				NOTE 1

Quantities				
RELOCATE CONCRETE LIGHT STANDARD	CABLE TRENCH I	2IN DIAMETER RIGID CONDUIT	UNDERGROUND CONDUCTOR NO4-TYPE RHW	UNDERGROUND CONDUCTOR NO6-TYPE THW
EA	LF	LF	LF	LF
4	1550	599	4224	1408

Conductor Phase 1
Conductor Phase 2
Neutral
Ground

(W) 3-1/C #10 RHW, 1-1/C #10 THW

(Y) Existing circuitry

(Z) 3-1/C #4 RHW, 1-1/C #6 THW

New or Relocated Luminaire 250 Watt HP Sodium Vapor Luminaire

70 Watt HP Sodium Underpass Luminaire

35 Watt HP Sodium Underpass Sconce

Relocated Concrete Light Standard

Existing Luminaire

Existing Concrete Light Standard

Pull Box or Junction Box

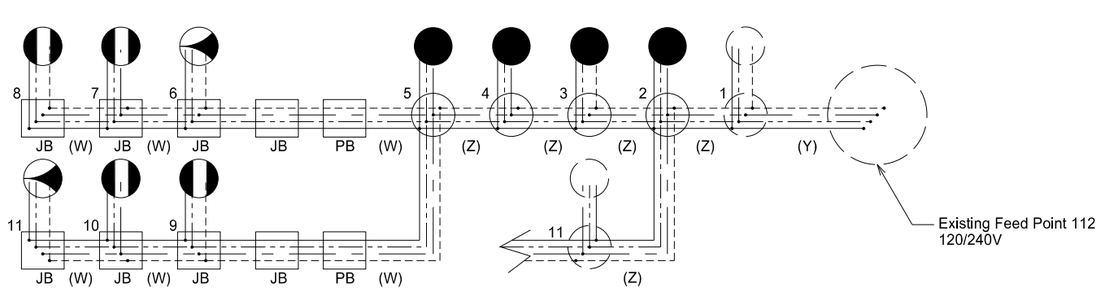

This document was originally issued and sealed by Steve McHenry Registration Number PE- 8671, on 12/10/13 and the original document is stored at the North Dakota Department of Transportation

Lighting

Williston Intersection US 2 & 18th St W & Bison Dr

US 2
Feed Point 112

STATE	PROJECT NO.	SECTION NO.	SHEET NO.
ND	SOIA-7-002(130)019	140	19

Station	Conduit Runs		Cable Trench	Cable Runs	
	Length (ft)	Size	Length (ft)	Length (ft)	Type
2+52.5 - 21.2' RT TO			193	603	3-1/C #4 RHW
1+64.0 - 36.0' RT TO				201	1-1/C #6 THW
1+50.7 - 41.8' RT TO					
1+32.0 - 40.4' RT TO					
1+12.2 - 28.5' RT TO					
1+04.4 - 09.3' RT					

No.	Station	Offset	Wattage	Circuit	IES-Type	Pole Ht.	Mast Arm	Note
9	1+04.4	9.3' RT	150	1				RELO

Quantities			
RELOCATE CONCRETE LIGHT STANDARD	CABLE TRENCH I	UNDERGROUND CONDUCTOR NO4-TYPE RHW	UNDERGROUND CONDUCTOR NO6-TYPE THW
EA	LF	LF	LF
1	193	603	201

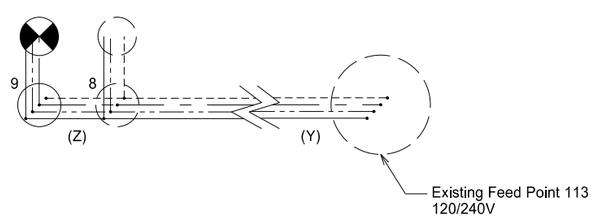

Conductor Phase 1
Conductor Phase 2
Neutral
Ground

(Y) Existing circuitry

(Z) 3-1/C #4 RHW,
1-1/C #6 THW

New or Relocated 150 Watt
HP Sodium Vapor Luminaire

Concrete Light Standard

Existing Luminaire

Existing Concrete Light Standard

This document was originally issued and sealed by Steve McHenry Registration Number PE- 8671, on 12/10/13 and the original document is stored at the North Dakota Department of Transportation

Lighting

Williston Intersection US 2 & 18th St W & Bison Dr

US 2
Feed Point 113

STATE	PROJECT NO.	SECTION NO.	SHEET NO.
ND	SOIA-7-002(130)019	140	20

Station	Conduit Runs		Cable Trench	Cable Runs	
	Length (ft)	Size	Length (ft)	Length (ft)	Type
106+57.0 - 115.9' RT TO	73	2"	166	522	3-1/C #4 RHW
106+88.7 - 46.1' LT				174	1-1/C #6 THW
106+88.7 - 46.1' LT TO			140	444	3-1/C #4 RHW
107+06.5 - 179.0' LT				148	1-1/C #6 THW

No.	Station	Offset	Wattage	Circuit	IES-Type	Pole Ht.	Mast Arm	Note
4	106+88.7	46.1' LT	150	1				RELO

Quantities				
RELOCATE CONCRETE LIGHT STANDARD	CABLE TRENCH I	2IN DIAMETER RIGID CONDUIT	UNDERGROUND CONDUCTOR NO4-TYPE RHW	UNDERGROUND CONDUCTOR NO6-TYPE THW
EA	LF	LF	LF	LF
1	306	73	966	322

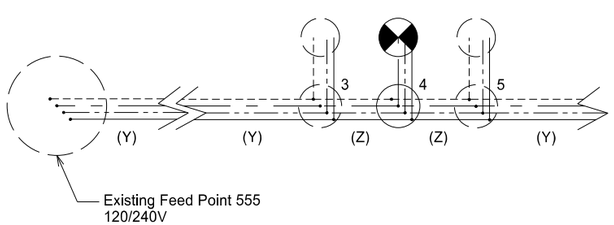

Conductor Phase 1
Conductor Phase 2
Neutral
Ground

(Y) Existing circuitry

(Z) 3-1/C #4 RHW,
1-1/C #6 THW

New or Relocated 150 Watt
HP Sodium Vapor Luminaire

Relocated Concrete Light Standard

Existing Luminaire

Existing Concrete Light Standard

This document was originally issued and sealed by Steve McHenry Registration Number PE- 8671, on 12/10/13 and the original document is stored at the North Dakota Department of Transportation

Lighting

Williston Intersection US 2 & 18th St W & Bison Dr

US 2
Feed Point 555

STATE	PROJECT NO.	SECTION NO.	SHEET NO.
ND	SOIA-7-002(130)019	140	21

Station	Conduit Runs		Cable Trench	Cable Runs	
	Length (ft)	Size	Length (ft)	Length (ft)	Type
1+22.0 - 27.4' LT TO	28	2"	159	501	3-1/C #4 RHW
1+28.9 - 15.3' RT TO				167	1-1/C #6 THW
1+81.4 - 15.6' RT TO					
2+55.0 - 25.8' RT					

No.	Station	Offset	Wattage	Circuit	IES-Type	Pole Ht.	Mast Arm	Note
2	2+55.0	25.8' RT	150	1				RELO

Quantities					
CONCRETE FOUNDATION-HIGHWAY LIGHTING	RELOCATE LIGHTING UNIT	CABLE TRENCH I	2IN DIAMETER RIGID CONDUIT	UNDERGROUND CONDUCTOR NO4-TYPE RHW	UNDERGROUND CONDUCTOR NO6-TYPE THW
EA	EA	LF	LF	LF	LF
1	1	159	28	501	167

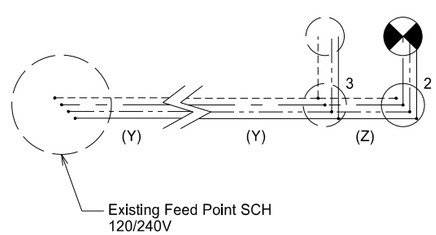

Conductor Phase 1
Conductor Phase 2
Neutral
Ground

(Y) Existing circuitry

(Z) 3-1/C #4 RHW,
1-1/C #6 THW

Relocated Luminaire

Relocated Concrete Light Standard

Existing Luminaire

Existing Concrete Light Standard

This document was originally issued and sealed by Steve McHenry Registration Number PE- 8671, on 12/10/13 and the original document is stored at the North Dakota Department of Transportation

Lighting

Williston Intersection US 2 & 18th St W & Bison Dr

US 2
Feed Point SCH

STATE	PROJECT NO.	SECTION NO.	SHEET NO.
ND	SOIA-7-002(130)019	140	22

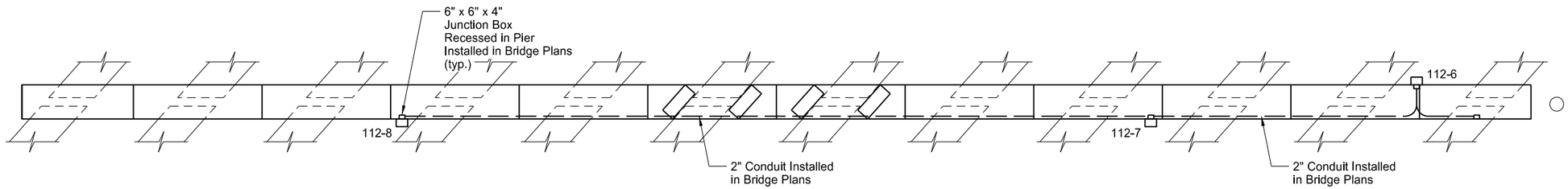

PLAN

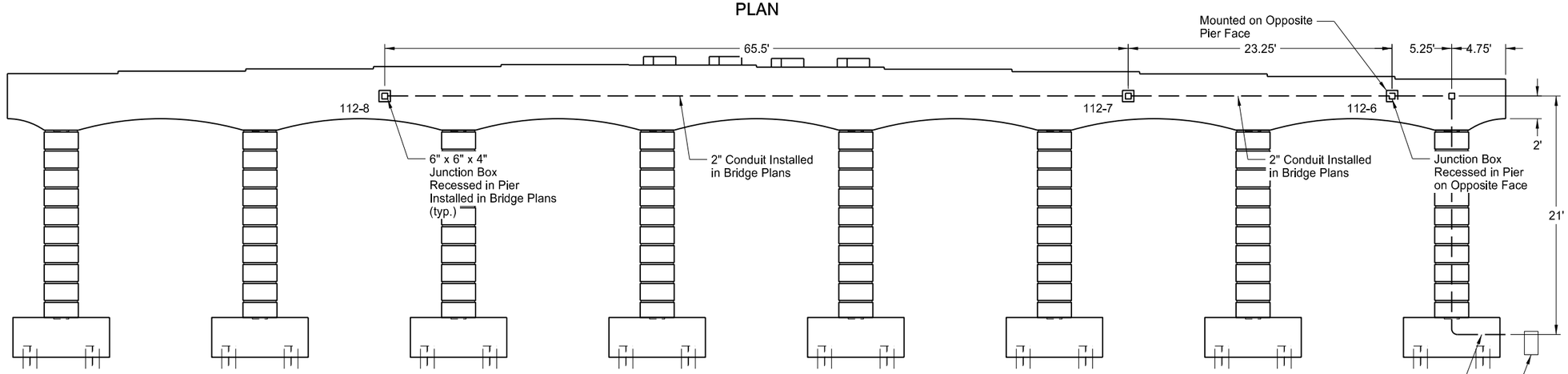

ELEVATION

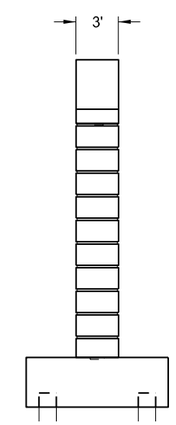

END VIEW

Quantities (A)							
PULL BOX	JUNCTION BOX	2IN DIAMETER RIGID STEEL CONDUIT	UNDERGROUND CONDUCTOR NO10 AWG STYLE RHW	UNDERGROUND CONDUCTOR NO10 AWG STYLE THW	HP SODIUM VAPOR WALL MTD LUMINAIRE-35 WATT	HP SODIUM VAPOR WALL MTD LUMINAIRE-70 WATT	UNDERPASS LIGHTING SYSTEM
EA	EA	LF	LF	LF	EA	EA	EA
1	4	123	474	237	2	1	1

(A) These items shall not be bid separately but shall be included in the item "Underpass Lighting System".

Note:
See section 140 sheet 18 for feed point 112 wiring diagram.

This document was originally issued and sealed by Steve McHenry Registration Number PE- 8671, on 12/10/13 and the original document is stored at the North Dakota Department of Transportation

Underpass Lighting

Williston Intersection US 2 & 18th St W & Bison Dr

US 2
Pier 2

STATE	PROJECT NO.	SECTION NO.	SHEET NO.
ND	SOIA-7-002(130)019	140	23

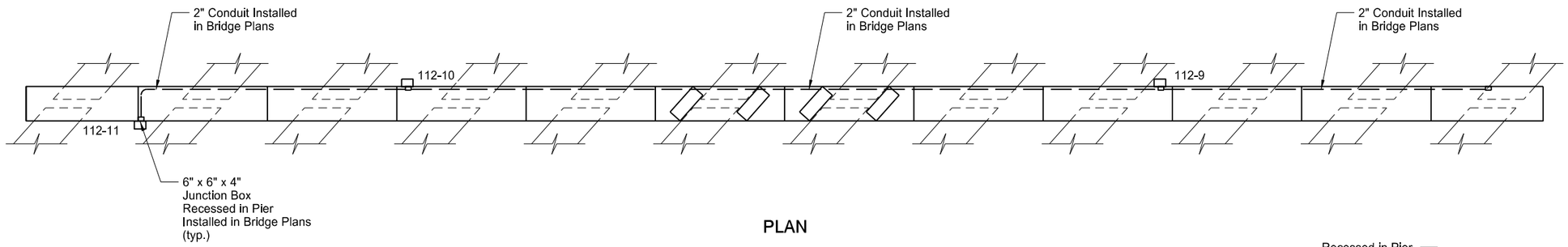

PLAN

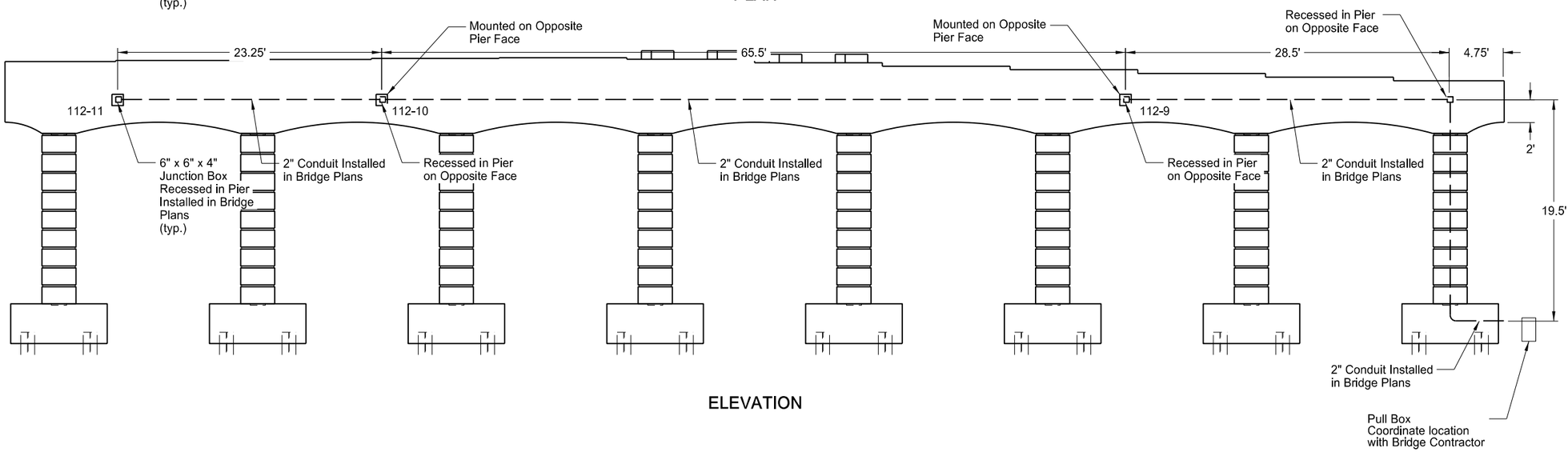

ELEVATION

END VIEW

Quantities (A)							
PULL BOX	JUNCTION BOX	2IN DIAMETER RIGID STEEL CONDUIT	UNDERGROUND CONDUCTOR NO10 AWG STYLE RHW	UNDERGROUND CONDUCTOR NO10 AWG STYLE THW	HP SODIUM VAPOR WALL MTD LUMINAIRE-35 WATT	HP SODIUM VAPOR WALL MTD LUMINAIRE-70 WATT	UNDERPASS LIGHTING SYSTEM
EA	EA	LF	LF	LF	EA	EA	EA
1	4	144	500	250	2	1	1

(A) These items shall not be bid separately but shall be included in the item "Underpass Lighting System".

Note:
See section 140 sheet 18 for feed point 112 wiring diagram.

This document was originally issued and sealed by Steve McHenry Registration Number PE- 8671, on 12/10/13 and the original document is stored at the North Dakota Department of Transportation

Underpass Lighting

Williston Intersection US 2 & 18th St W & Bison Dr

US 2
Pier 3

STATE	PROJECT NO.	SECTION NO.	SHEET NO.
ND	SOIA-7-002(130)019	150	1

772	3125	Remove Traffic Signal System		
		US 2 & 18th St W	1	EA

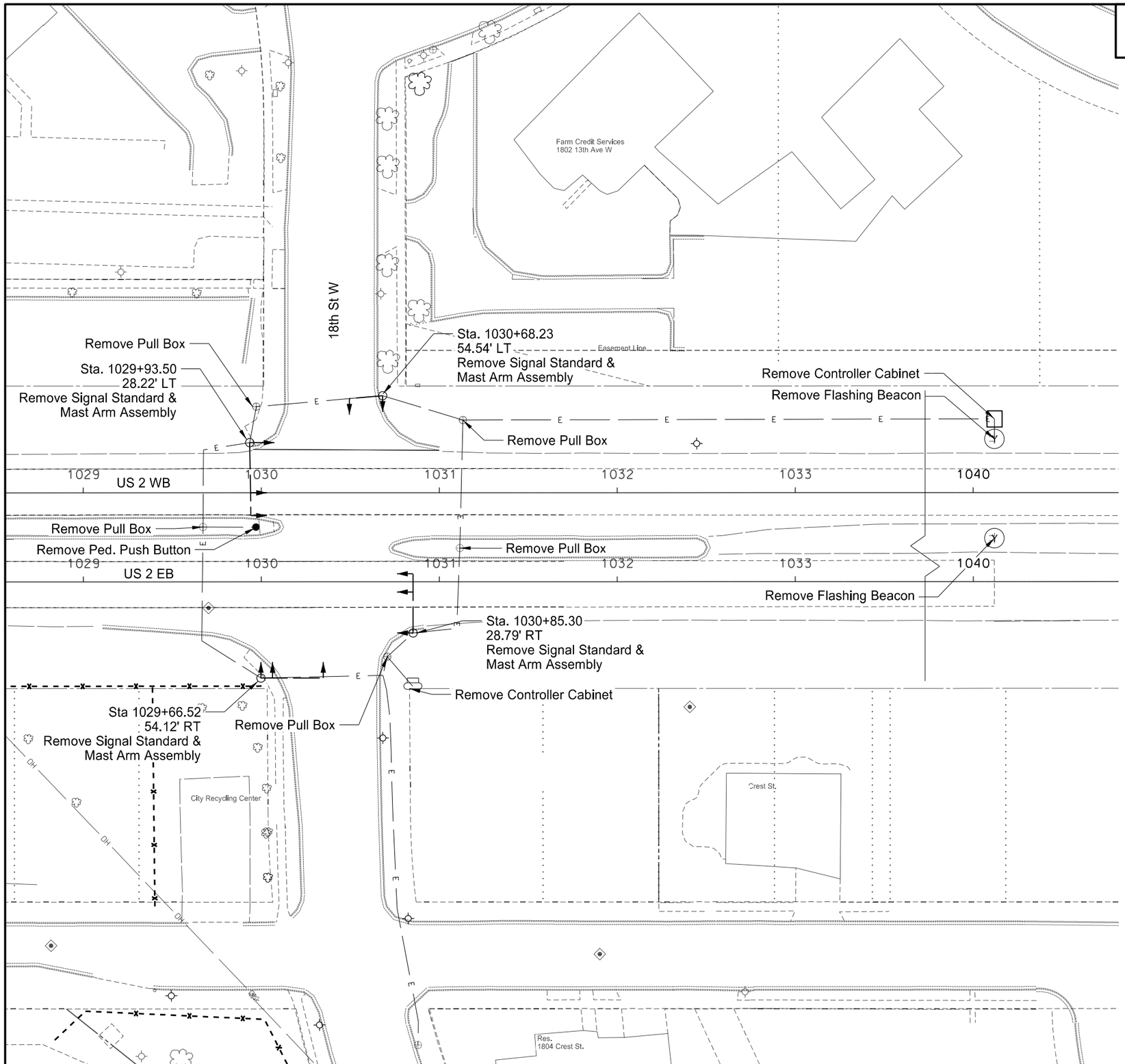

LEGEND

- TRAFFIC SIGNAL HEAD
- PEDESTRIAN PUSH BUTTON
- SIGNAL CONTROLLER
- PULL BOX
- LIGHT STANDARD W/ MAST ARM
- FLASHING BEACON
- CONTROLLER CABINET

This document was originally issued and sealed by Nicholas J. Erpelding, Registration Number PE- 5870, on 12/16/13 and the original document is stored at the North Dakota Department of Transportation

Removals

Williston Intersection US 2 & 18th St W & Bison Dr

US 2 & 18th St W
Traffic Signal Removal

STATE	PROJECT NO.	SECTION NO.	SHEET NO.
ND	SOIA-7-002(130)019	150	2

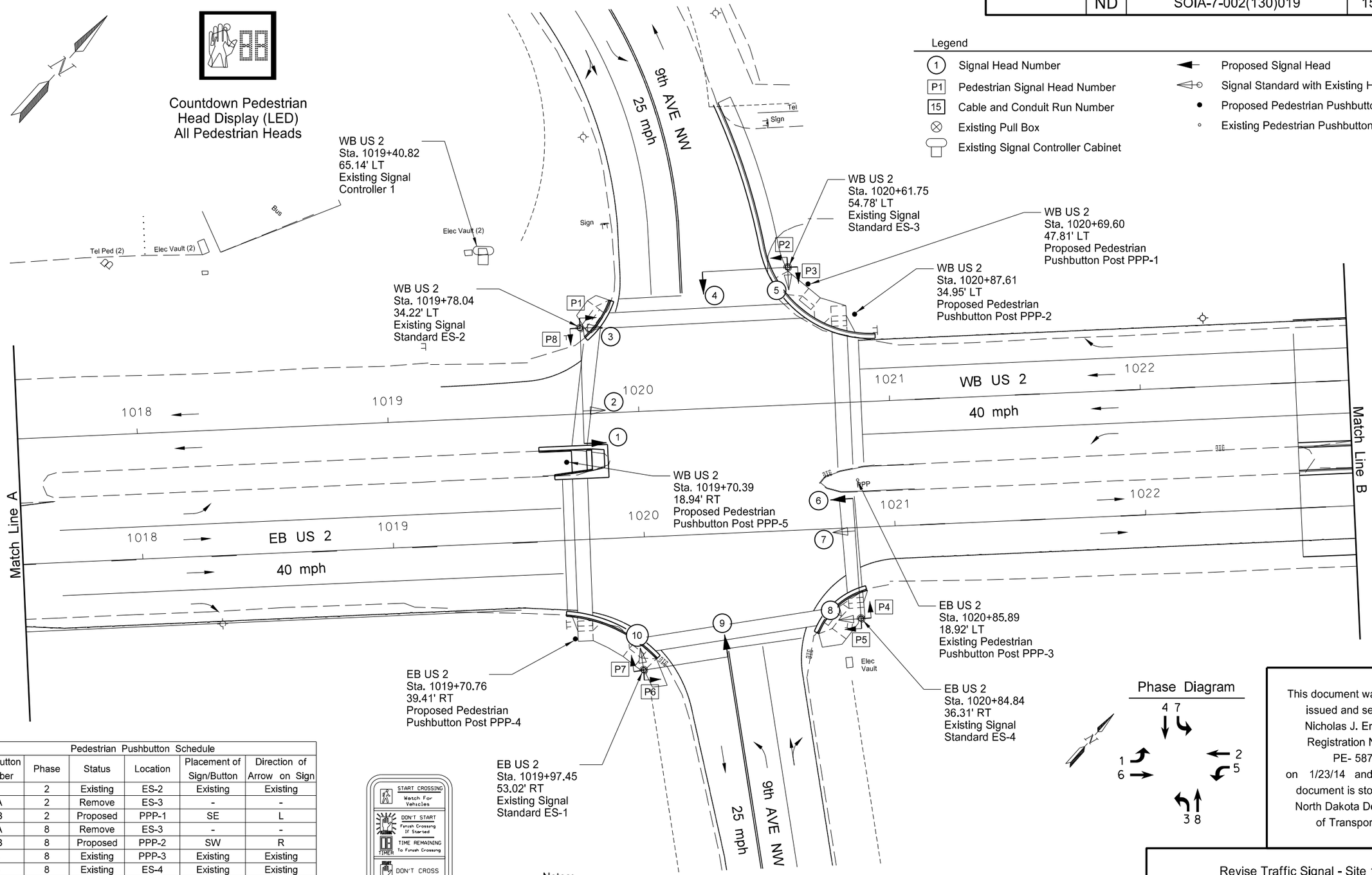

Pedestrian Pushbutton Schedule					
Pushbutton Number	Phase	Status	Location	Placement of Sign/Button	Direction of Arrow on Sign
1	2	Existing	ES-2	Existing	Existing
2A	2	Remove	ES-3	-	-
2B	2	Proposed	PPP-1	SE	L
3A	8	Remove	ES-3	-	-
3B	8	Proposed	PPP-2	SW	R
4	8	Existing	PPP-3	Existing	Existing
5	8	Existing	ES-4	Existing	Existing
6	6	Proposed	ES-4	NW	R
7	6	Proposed	ES-1	NW	L
8	4	Proposed	PPP-4	NE	R
9	4	Proposed	PPP-5	NE	Both
10	4	Proposed	ES-2	NE	L

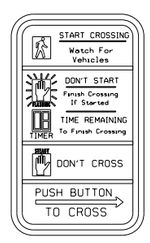

R10-3e

Notes:
1. All equipment is existing unless otherwise noted.
2. All stations and offsets are referenced from nearest US 2 alignment.
3. Contractor shall remove existing 3-section vehicle indications 1, 4, 6, and 9.
4. Contractor shall furnish and install 5-section vehicle indications 1, 4, 6, and 9.
5. Contractor shall remove existing pedestrian indications P1, P2, P3, and P4.
6. Contractor shall furnish and install countdown pedestrian indications P1, P2, P3, P4, P5, P6, P7, and P8.

This document was originally issued and sealed by Nicholas J. Erpelding, Registration Number PE- 5870, on 1/23/14 and the original document is stored at the North Dakota Department of Transportation

Revise Traffic Signal - Site 1

Williston Intersection US 2 & 18th St W & Bison Dr

Traffic Signal Equipment Layout
US 2 & 9th Ave NW

STATE	PROJECT NO.	SECTION NO.	SHEET NO.
ND	SOIA-7-002(130)019	150	3

Video Detector Zone Schedule

Zone	Video Camera	Phase	Size (ft)	Type	Approximate Distance from Stop Bar to Detection Zone
D1-1	VC-4	1	1-6x50	Presence	0'
D2-1	VC-2	2	1-6x6	Counting	0'
D2-2,D2-3	VC-2	2	1-6x6	Counting	0'
D2-4,D2-5	VC-2	2	1-6x6	Passage	300'
D3-1	VC-3	3	1-6x50	Presence	0'
D4-1	VC-1	4	1-6x50	Presence	0'
D5-1	VC-2	5	1-6x50	Presence	0'
D6-1	VC-4	6	1-6x6	Counting	0'
D6-2,D6-3	VC-4	6	1-6x6	Counting	0'
D6-4,D6-5	VC-4	6	1-6x6	Passage	300'
D7-1	VC-1	7	1-6x50	Presence	0'
D8-1	VC-3	8	1-6x50	Presence	0'

Note: Counting enabled for all detectors.

Legend

- Signal Head Number
- Pedestrian Signal Head Number
- Cable and Conduit Run Number
- Existing Signal Controller Cabinet
- Existing Video Detection Camera
- Proposed Signal Head
- Signal Standard with Existing Head
- Proposed Pedestrian Pushbutton Post
- Existing Pedestrian Pushbutton Post

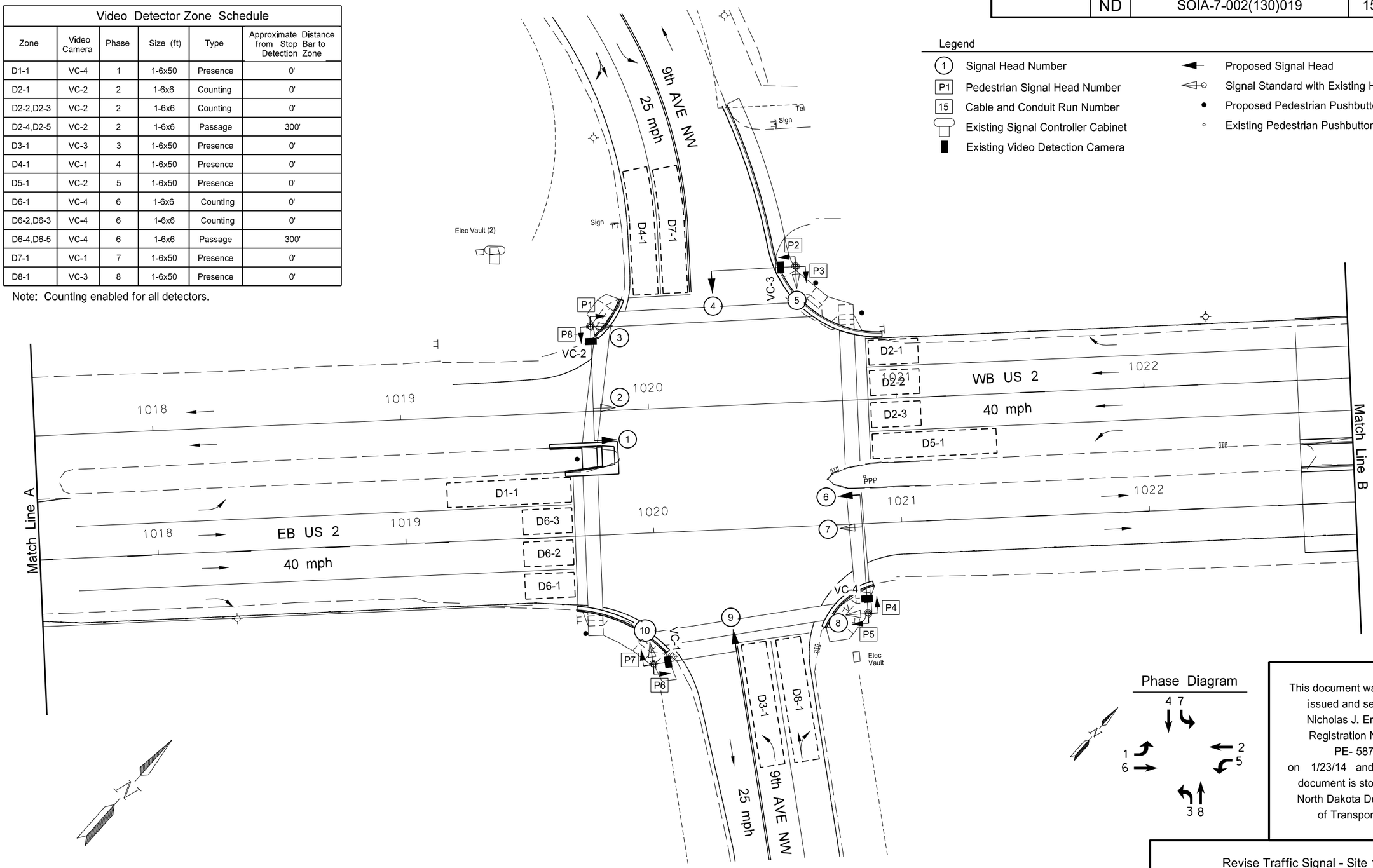

Phase Diagram

This document was originally issued and sealed by Nicholas J. Erpelding, Registration Number PE- 5870, on 1/23/14 and the original document is stored at the North Dakota Department of Transportation

Notes:
1. All equipment is existing unless otherwise noted.
2. All stations and offsets are referenced from nearest US 2 alignment.
3. All video cameras are existing/inplace. Contractor shall update/redraw detection zones as shown.

Revise Traffic Signal - Site 1

Williston Intersection US 2 & 18th St W & Bison Dr

Traffic Signal Detection Layout
US 2 & 9th Ave NW

STATE	PROJECT NO.	SECTION NO.	SHEET NO.
ND	SOIA-7-002(130)019	150	4

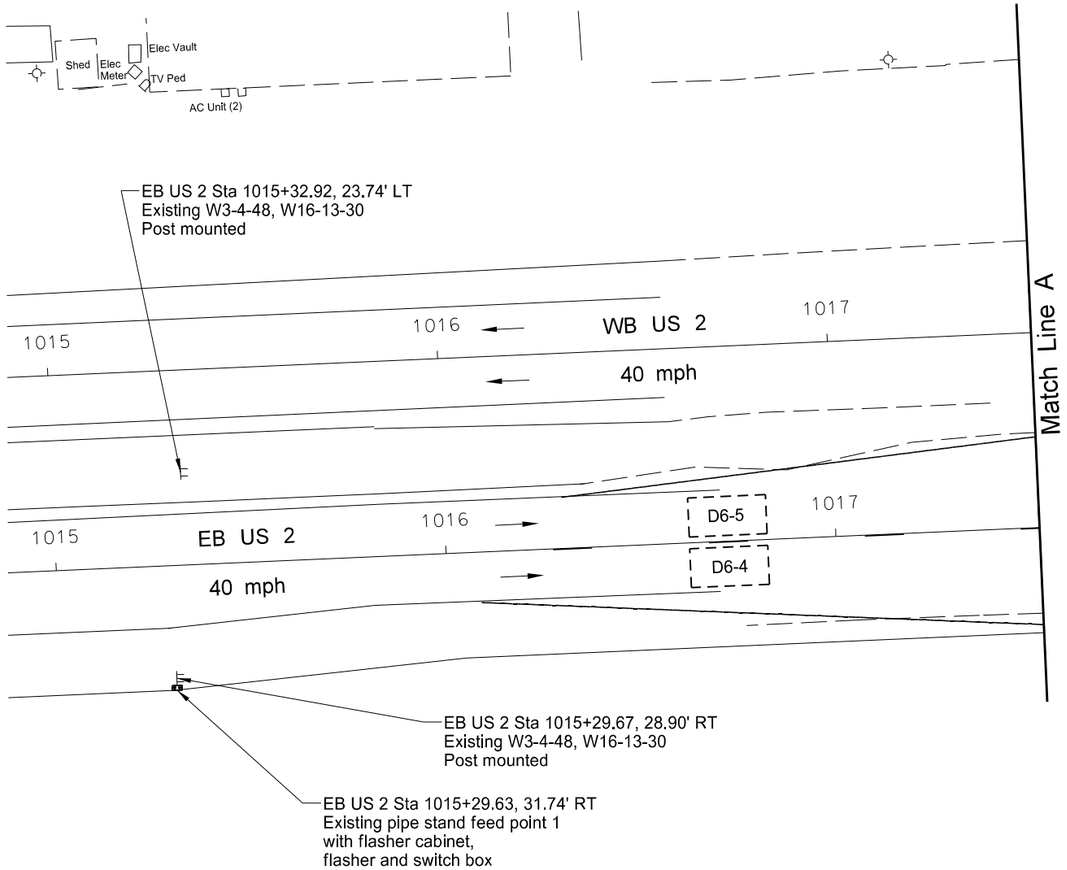

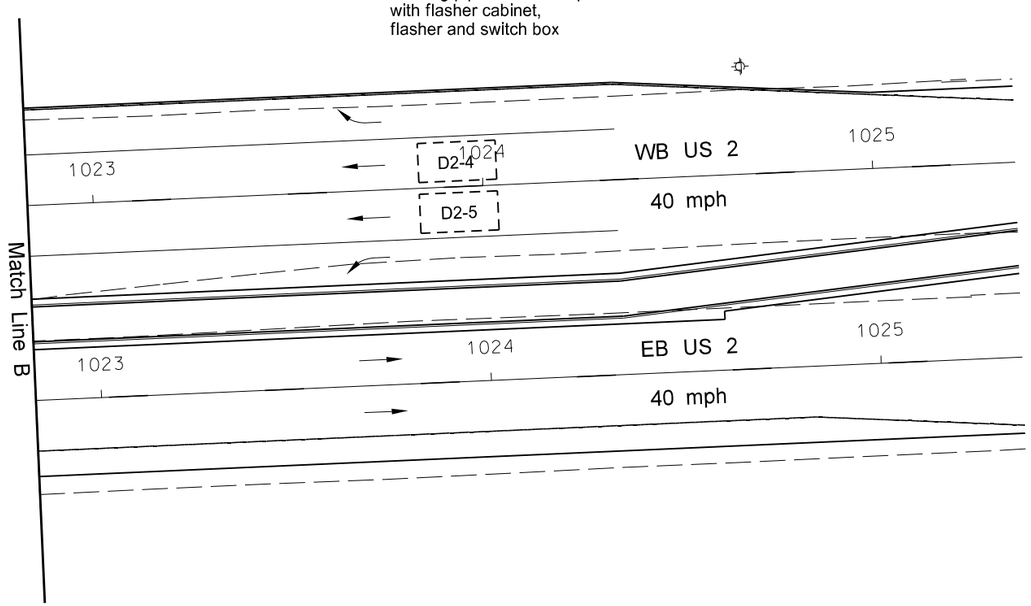

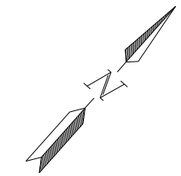

This document was originally issued and sealed by Nicholas J. Erpelding, Registration Number PE- 5870, on 1/23/14 and the original document is stored at the North Dakota Department of Transportation

Notes:
1. All stations and offsets are referenced from nearest US 2 alignment.
2. Contractor shall update/redraw detection zones as shown.

Revise Traffic Signal - Site 1

Williston Intersection US 2 & 18th St W & Bison Dr

Traffic Signal Detection Layout - Matchlines
US 2 & 9th Ave NW

STATE	PROJECT NO.	SECTION NO.	SHEET NO.
ND	SOIA-7-002(130)019	150	5

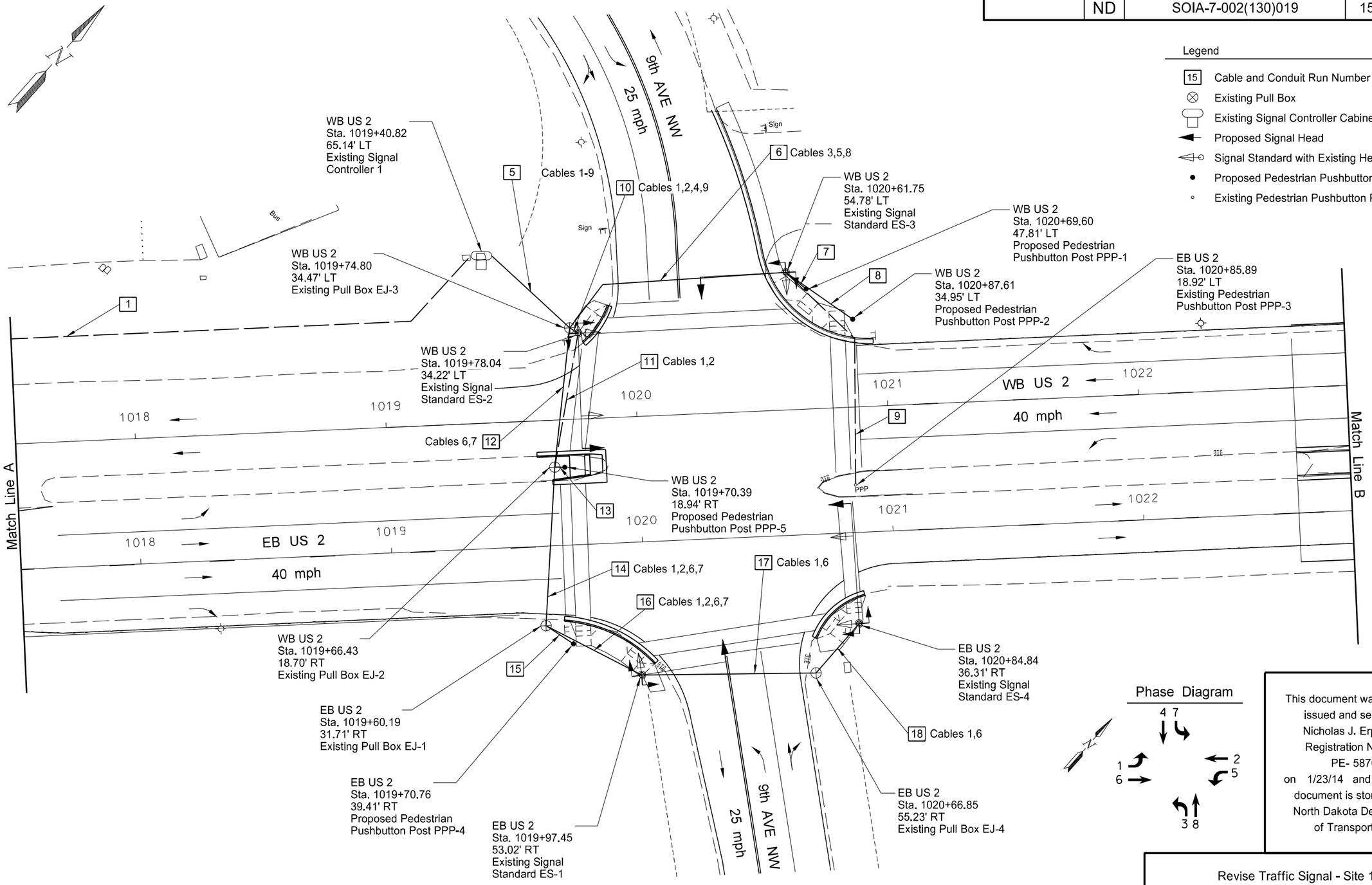

This document was originally issued and sealed by Nicholas J. Erpelding, Registration Number PE- 5870, on 1/23/14 and the original document is stored at the North Dakota Department of Transportation

Revise Traffic Signal - Site 1

Williston Intersection US 2 & 18th St W & Bison Dr

Traffic Signal Conduit/Cable Layout
US 2 & 9th Ave NW

Notes:
1. All equipment is existing unless otherwise noted.
2. All stations and offsets are referenced from nearest US 2 alignment.

STATE	PROJECT NO.	SECTION NO.	SHEET NO.
ND	SOIA-7-002(130)019	150	6

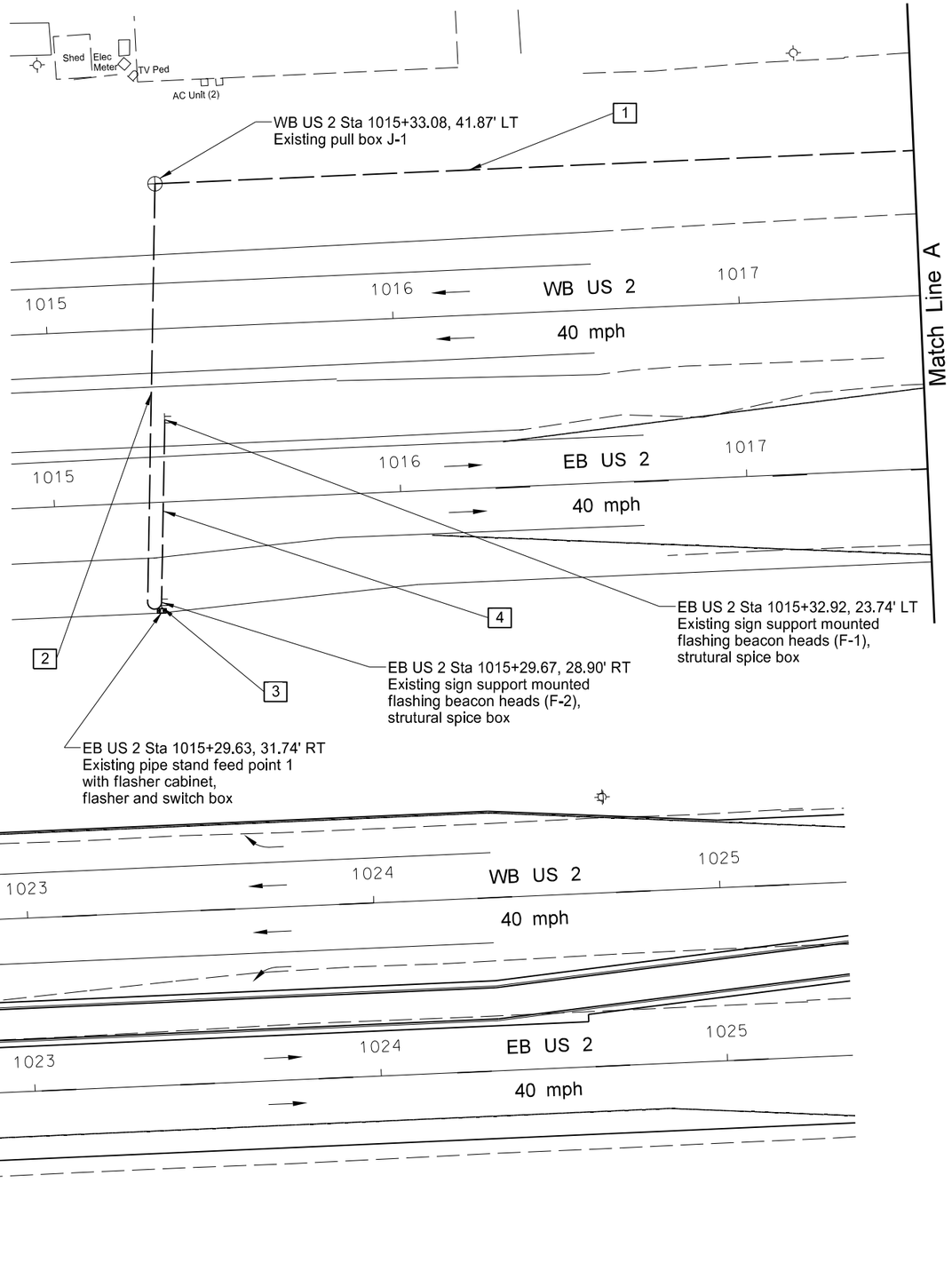

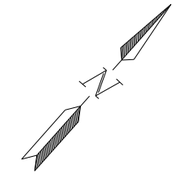

Legend

15 Cable and Conduit Run Number

⊗ Existing Pull Box

This document was originally issued and sealed by Nicholas J. Erpelding, Registration Number PE- 5870, on 1/23/14 and the original document is stored at the North Dakota Department of Transportation

Note:
All stations and offsets are referenced from nearest US 2 alignment

Revise Traffic Signal - Site 1

Williston Intersection US 2 & 18th St W & Bison Dr

Traffic Signal Conduit/Cable Layout - Matchlines US 2 & 9th Ave NW

STATE	PROJECT NO.	SECTION NO.	SHEET NO.
ND	SOIA-7-002(130)019	150	7

Run	Station	Location	Conduit Run		Cable Run		
			Length	Size	QTY	Length	Type
1	WB 1019+40.82 to WB 1015+33.08	Signal Controller 1 to Pull Box J-1	374	Existing 2"	1		Existing: No. 12 AWG 5 Conductor Cable
2	WB 1015+33.08 to EB 1015+29.63	Pull Box J-1 to Flasher Feedpoint 1	133	Existing 2"	1		Existing: No. 12 AWG 5 Conductor Cable
3	EB 1015+29.63 to EB 1015+29.67	Flasher Feedpoint 1 to Flasher Beacon Heads F-2	8	Existing 2"	1		Existing: No. 12 AWG 5 Conductor Cable
4	EB 1015+29.67 to EB 1015+32.92	Flasher Beacon Heads F-2 to Flasher Beacon Heads F-1	58	Existing 2"	1		Existing: No. 12 AWG 5 Conductor Cable
5	WB 1019+40.82 to WB 1019+74.80	Signal Controller 1 to Pull Box EJ-3	42	Existing 3 1/2"	5 8 3 2 4 4		Existing: Loop Lead-in Cable No. 12 AWG 2 Conductor Cable No. 12 AWG 7 Conductor Cable No. 12 AWG 10 Conductor Cable Emergency Detector Cable Video Detector Cable
			42	Proposed 3"	7 3 1	364 156 52	Proposed: No. 12 AWG 2 Conductor Cable No. 12 AWG 7 Conductor Cable No. 12 AWG 10 Conductor Cable
6	WB 1019+74.80 to WB 1020+61.75	Pull Box EJ-3 to Signal Standard ES-3	96	Existing 2"	1 2 2 1 1		Existing: Loop Lead-in Cable No. 12 AWG 2 Conductor Cable No. 12 AWG 7 Conductor Cable Emergency Detector Cable Video Detector Cable
			96	Proposed 3"	2 1	212 106	Proposed: No. 12 AWG 2 Conductor Cable No. 12 AWG 7 Conductor Cable
7	WB 1020+61.75 to WB 1020+69.60	Signal Standard ES-3 to Ped. Pushbutton PPP-1	11	Proposed 1"	1	21	Proposed: No. 12 AWG 2 Conductor Cable
8	WB 1020+61.75 to WB 1020+87.61	Signal Standard ES-3 to Ped. Pushbutton PPP-2	33	Proposed 1"	1	43	Proposed: No. 12 AWG 2 Conductor Cable
9	WB 1020+61.75 to WB 1020+85.89	Signal Standard ES-3 to Ped. Pushbutton PPP-3	96	Existing 1"	1		Existing: No. 12 AWG 2 Conductor Cable
10	WB 1019+74.80 to WB 1019+78.04	Pull Box EJ-3 to Signal Standard ES-2	9	Existing 3"	2 5 1 2 3 3		Existing: Loop Lead-in Cable No. 12 AWG 2 Conductor Cable No. 12 AWG 7 Conductor Cable No. 12 AWG 10 Conductor Cable Emergency Detector Cable Video Detector Cable
			9	Proposed 3"	1 1	19 19	Proposed: No. 12 AWG 2 Conductor Cable No. 12 AWG 7 Conductor Cable
11	WB 1019+78.04 to WB 1019+66.43	Signal Standard ES-2 to Pull Box EJ-2	54	Existing 3"	2 3 1 1 2 2		Existing: Loop Lead-in Cable No. 12 AWG 2 Conductor Cable No. 12 AWG 7 Conductor Cable No. 12 AWG 10 Conductor Cable Emergency Detector Cable Video Detector Cable

Run	Station	Location	Conduit Run		Cable Run		
			Length	Size	QTY	Length	Type
12	WB 1019+74.80 to WB 1019+66.43	Pull Box EJ-3 to Pull Box EJ-2	56	Proposed 3"	4 1 1	264 66 66	Proposed: No. 12 AWG 2 Conductor Cable No. 12 AWG 7 Conductor Cable No. 12 AWG 10 Conductor Cable
13	WB 1019+66.43 to WB 1019+70.39	Pull Box EJ-2 to Ped. Pushbutton PPP-5	4	Proposed 1"	1	14	Proposed: No. 12 AWG 2 Conductor Cable
14	WB 1019+66.43 to EB 1019+60.19	Pull Box EJ-2 to Pull Box EJ-1	64	Existing 3"	2 3 1 1 2 2		Existing: Loop Lead-in Cable No. 12 AWG 2 Conductor Cable No. 12 AWG 7 Conductor Cable No. 12 AWG 10 Conductor Cable Emergency Detector Cable Video Detector Cable
			64	Proposed 3"	3 1 1	222 74 74	Proposed: No. 12 AWG 2 Conductor Cable No. 12 AWG 7 Conductor Cable No. 12 AWG 10 Conductor Cable
15	EB 1019+60.19 to EB 1019+70.76	Pull Box EJ-1 to Ped. Pushbutton PPP-4	13	Proposed 1"	1	23	Proposed: No. 12 AWG 2 Conductor Cable
16	EB 1019+60.19 to EB 1019+97.45	Pull Box EJ-1 to Signal Standard ES-1	43	Existing 2 1/2"	1 3 1 1 2 2		Existing: Loop Lead-in Cable No. 12 AWG 2 Conductor Cable No. 12 AWG 7 Conductor Cable No. 12 AWG 10 Conductor Cable Emergency Detector Cable Video Detector Cable
			43	Proposed 3"	2 1 1	106 53 53	Proposed: No. 12 AWG 2 Conductor Cable No. 12 AWG 7 Conductor Cable No. 12 AWG 10 Conductor Cable
17	EB 1019+97.45 to EB 1020+66.85	Signal Standard ES-1 to Pull Box EJ-4	69	Existing 2 1/2"	1 2 1 1 1		Existing: Loop Lead-in Cable No. 12 AWG 2 Conductor Cable No. 12 AWG 10 Conductor Cable Emergency Detector Cable Video Detector Cable
			69	Proposed 3"	1 1	79 79	Proposed: No. 12 AWG 2 Conductor Cable No. 12 AWG 7 Conductor Cable
18	EB 1020+66.85 to EB 1020+84.84	Pull Box EJ-4 to Signal Standard ES-4	40	Existing 2 1/2"	2 1 1 1		Existing: No. 12 AWG 2 Conductor Cable No. 12 AWG 10 Conductor Cable Emergency Detector Cable Video Detector Cable
			40	Proposed 3"	1 1	50 50	Proposed: No. 12 AWG 2 Conductor Cable No. 12 AWG 7 Conductor Cable

Note:
1. Contractor to verify inplace wiring.

This document was originally issued and sealed by Nicholas J. Erpelding, Registration Number PE- 5870, on 1/23/14 and the original document is stored at the North Dakota Department of Transportation

Revise Traffic Signal - Site 1

Williston Intersection US 2 & 18th St W & Bison Dr

Conduit and Conductors
US 2 & 9th Ave NW

STATE	PROJECT NO.	SECTION NO.	SHEET NO.
ND	SOIA-7-002(130)019	150	8

Notes:
1. All equipment shown is existing unless otherwise noted.
2. Remove existing 3-section vehicle indication 4.
3. Furnish and Install 5-section vehicle indication 4.
4. Modify placement of "Left Turn Yield on Green Ball" sign as needed.
5. Remove existing pedestrian indications P2 and P3.
6. Furnish and Install countdown pedestrian indications P2 and P3.

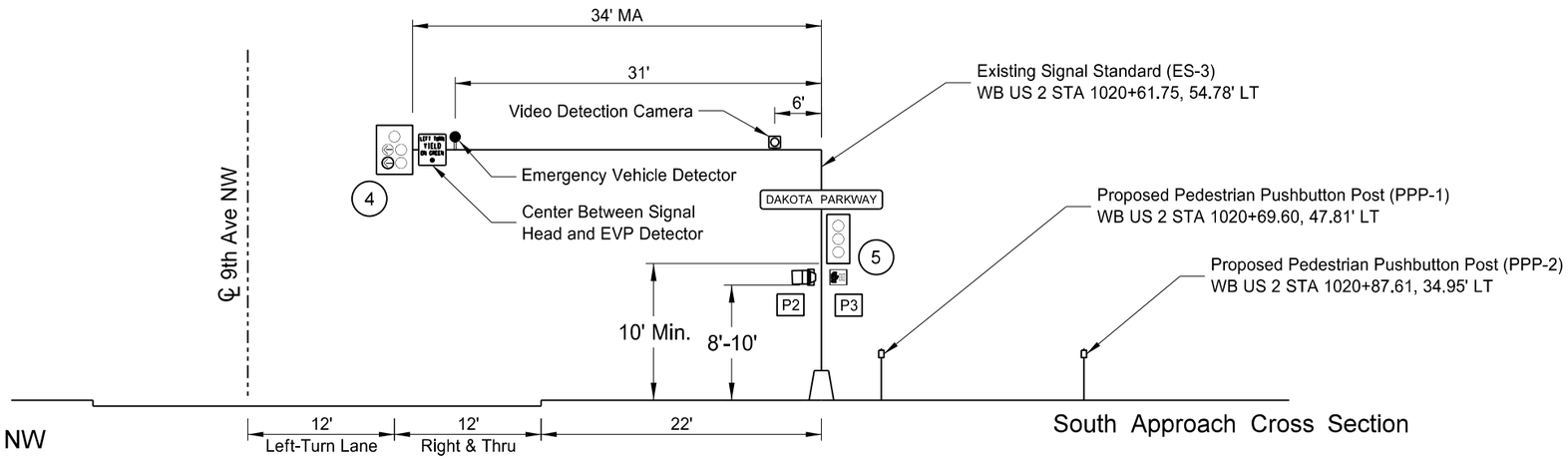

Northbound 9th Ave NW

South Approach Cross Section

*The final location of the video detection cameras shall be determined by the contractor to provide a functional system.

LEGEND

- Existing Transformer Base
- Existing Video Detection Camera
- Traffic Signal Head
- Pedestrian Signal Head
- Signal Head Number
- Existing Emergency Vehicle Detection Unit

Notes:
1. All equipment shown is existing unless otherwise noted.
2. Remove existing 3-section vehicle indication 9.
3. Furnish and Install 5-section vehicle indication 9.
4. Modify placement of "Left Turn Yield on Green Ball" sign as needed.
5. Furnish and Install countdown pedestrian indications P6 and P7.

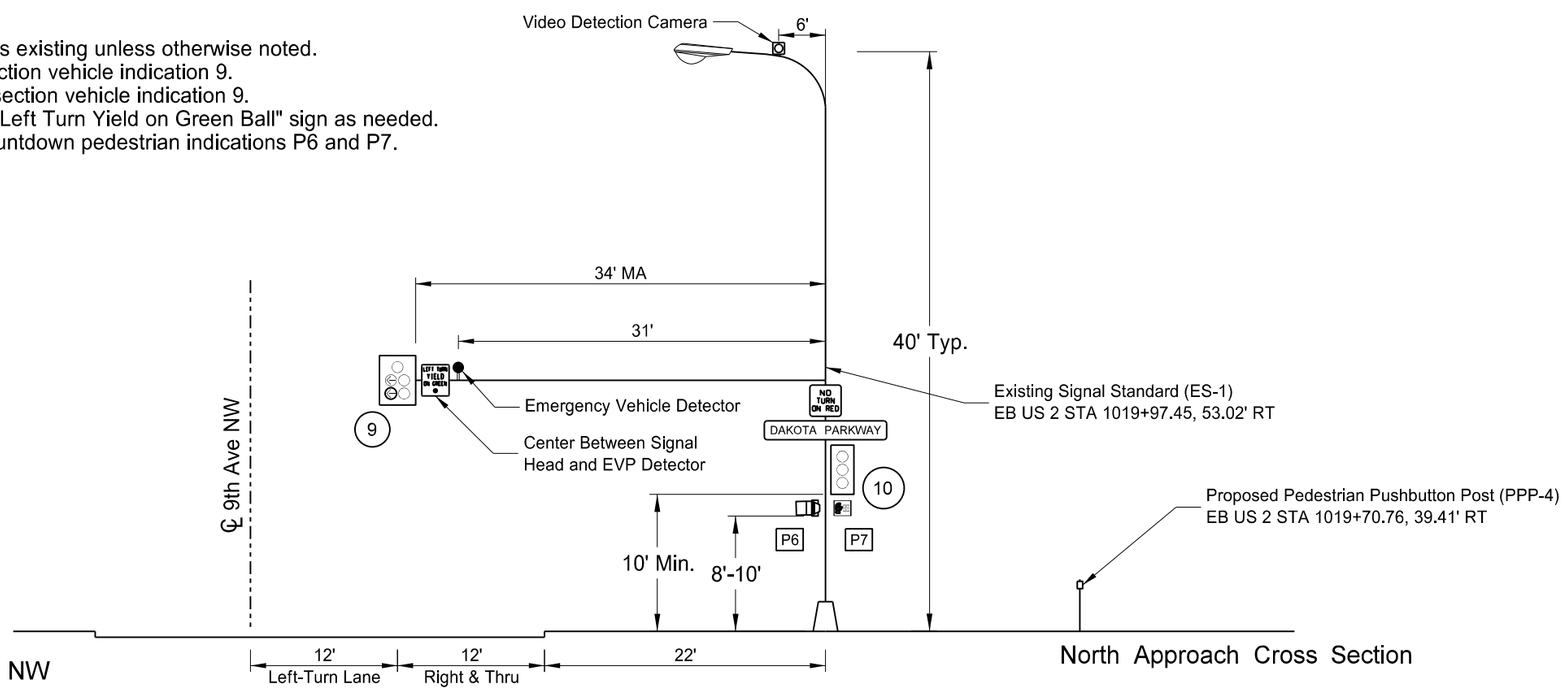

Southbound 9th Ave NW

North Approach Cross Section

This document was originally issued and sealed by Nicholas J. Erpelding, Registration Number PE- 5870, on 1/23/14 and the original document is stored at the North Dakota Department of Transportation

Revise Traffic Signal - Site 1

Williston Intersection US 2 & 18th St W & Bison Dr

Signal Standards and Head Locations
US 2 & 9th Ave NW

STATE	PROJECT NO.	SECTION NO.	SHEET NO.
ND	SOIA-7-002(130)019	150	9

Notes:
1. All equipment shown is existing unless otherwise noted.
2. Remove existing 3-section vehicle indication 6.
3. Furnish and Install 5-section vehicle indication 6.
4. Modify placement of "Left Turn Yield on Green Ball" sign as needed.
5. Remove existing pedestrian indication P4.
6. Furnish and Install countdown pedestrian indications P4 and P5.

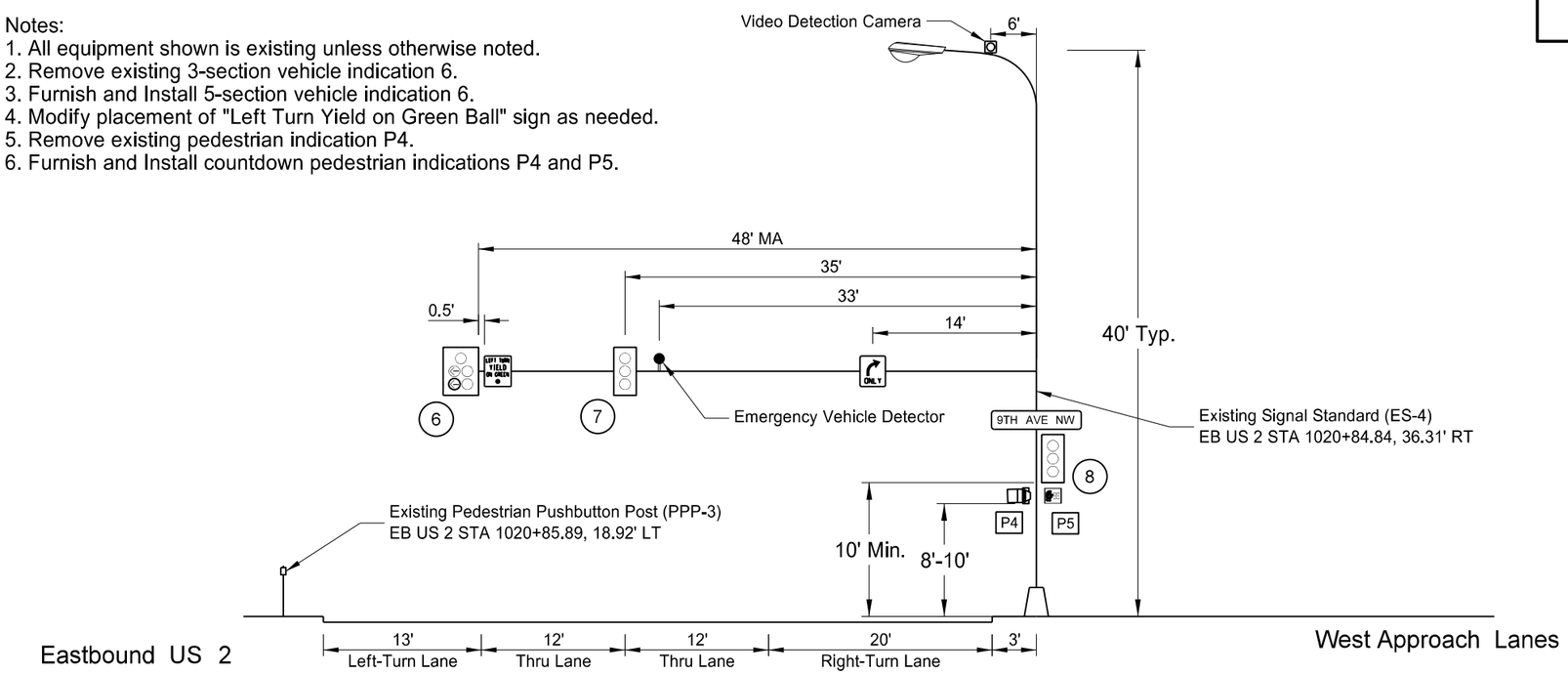

*The final location of the video detection cameras shall be determined by the contractor to provide a functional system.

Notes:
1. All equipment shown is existing unless otherwise noted.
2. Remove existing 3-section vehicle indication 1.
3. Furnish and Install 5-section vehicle indication 1.
4. Modify placement of "Left Turn Yield on Green Ball" sign as needed.
5. Remove existing pedestrian indication P1.
6. Furnish and Install countdown pedestrian indications P1 and P8.

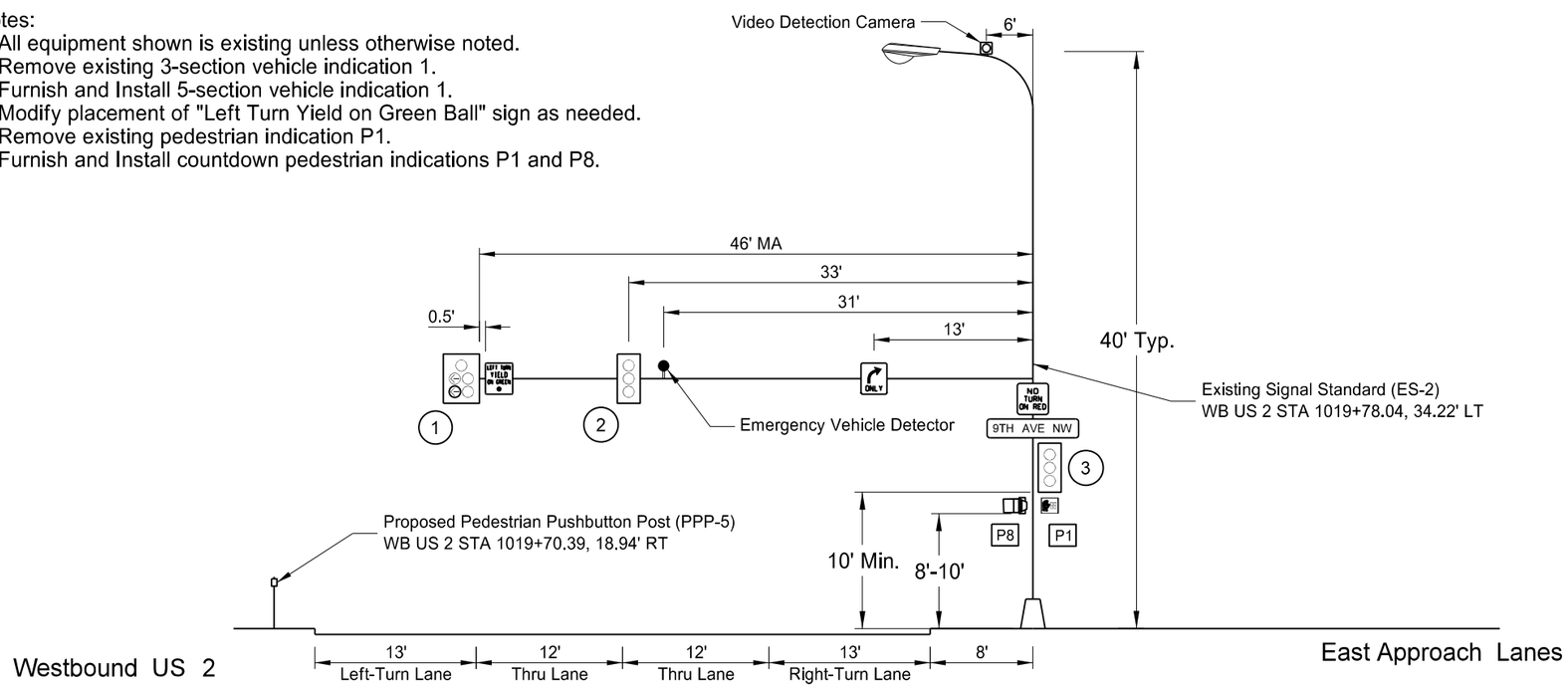

LEGEND

- Existing Transformer Base
- Existing Video Detection Camera
- Traffic Signal Head
- Pedestrian Signal Head
- (X) Signal Head Number
- Existing Emergency Vehicle Detection Unit

This document was originally issued and sealed by Nicholas J. Erpelding, Registration Number PE- 5870, on 1/23/14 and the original document is stored at the North Dakota Department of Transportation

Revise Traffic Signal - Site 1

Williston Intersection US 2 & 18th St W & Bison Dr

Signal Standards and Head Locations
US 2 & 9th Ave NW

STATE	PROJECT NO.	SECTION NO.	SHEET NO.
ND	SOIA-7-002(130)019	150	10

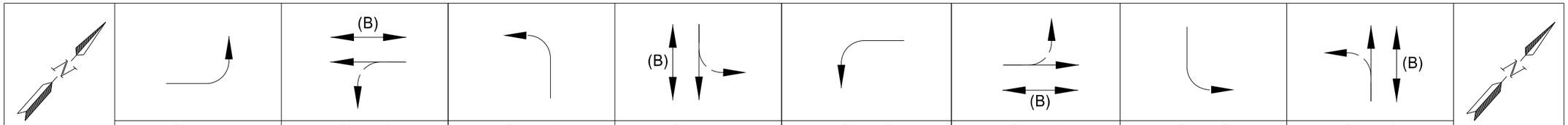

	Phase 1								Phase 2								Phase 3								Phase 4							
	EB								WB								NB								SB							
Head #	R/W	Clear to Phase							R/W	Clear to Phase							R/W	Clear to Phase							R/W	Clear to Phase						
		2	3	4	5	6	7	8		3	4	5	6	7	8	1		4	5	6	7	8	1	2		5	6	7	8	1	2	3
1									G	Y	Y	(A)	(A)	Y	Y	Y																
2									G	Y	Y	(A)	(A)	Y	Y	Y																
3									G	Y	Y	(A)	(A)	Y	Y	Y																
4																	GL	YL	YL	YL	(A)	(A)	YL	YL								
5																																
6	GL	YL	YL	YL	(A)	(A)	YL	YL																								
7																																
8																																
9																									G	Y	Y	(A)	(A)	Y	Y	Y
10																									G	Y	Y	(A)	(A)	Y	Y	Y

	Phase 5								Phase 6								Phase 7								Phase 8								
	WB								EB								SB								NB								
Head #	R/W	Clear to Phase							R/W	Clear to Phase							R/W	Clear to Phase							R/W	Clear to Phase							Head #
		6	7	8	1	2	3	4		7	8	1	2	3	4	5		8	1	2	3	4	5	6		1	2	3	4	5	6	7	
1	GL	YL	YL	YL	(A)	(A)	YL	YL																									1
2																																	2
3																																	3
4																									G	Y	Y	(A)	(A)	Y	Y	Y	4
5																									G	Y	Y	(A)	(A)	Y	Y	Y	5
6									G	Y	Y	(A)	(A)	Y	Y	Y																	6
7									G	Y	Y	(A)	(A)	Y	Y	Y																	7
8									G	Y	Y	(A)	(A)	Y	Y	Y																	8
9																	GL	YL	YL	YL	(A)	(A)	YL	YL									9
10																																	10

Blank Squares Denote Red Indication
G = Green Ball Indication
Y = Yellow Ball Indication
GL = Green Left Arrow Indication
YL = Yellow Left Arrow Indication
(A) = Continue to Display Right of Way Indication.
When one phase is on alone any nonconflicting phase may start timing concurrently without a clearance interval (See Chart A).

Chart A	
On Phase	Non-Conflicting Phase Allowed to Time Concurrently
1	5 or 6
2	5 or 6
3	7 or 8
4	7 or 8
5	1 or 2
6	1 or 2
7	3 or 4
8	3 or 4

Emergency Vehicle Preemption Phasing			
Eastbound	Westbound	Northbound	Southbound
Phase 6	Phase 2	Phase 8	Phase 4

Protected Movement

Permitted Movement

(B) Pedestrian Actuation

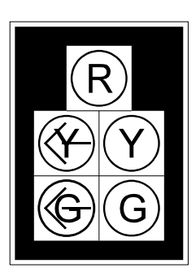

(12" Lenses)
Heads 1,4,6,9

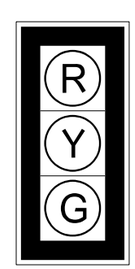

(12" Lenses)
Heads 2,3,5,7,8,10

Notes:

All Heads Shall use LED.

All left turn phases shall be leading phases only.

This document was originally issued and sealed by Nicholas J. Erpelding, Registration Number PE- 5870, on 1/23/14 and the original document is stored at the North Dakota Department of Transportation

Revise Traffic Signal - Site 1

Williston Intersection US 2 & 18th St W & Bison Dr

Phasing
US 2 & 9th Ave NW

STATE	PROJECT NO.	SECTION NO.	SHEET NO.
ND	SOIA-7-002(130)019	150	11

US 2 & 9th Ave NW
Inplace Wiring - Contractor to Field Verify

Conductor			Existing Cable 1 (10 No.12 AWG)		Existing Cable 2 (7 No.12 AWG)		Existing Cable 3 (7 No.12 AWG)		Existing Cable 4 (10 No. 12 AWG)		Existing Cable 5 (7 No.12 AWG)	
Run	Base	Tracer	Head	Indication	Head	Indication	Head	Indication	Head	Indication	Head	Indication
1	Black		6,7,8	Ø6 Green	9,10	Ø4 Green	4,5	Ø8 Green	1,2,3	Ø2 Green		Spare
2	White			Neutral		Neutral		Neutral		Neutral		Neutral
3	Red		6,7,8	Ø6 Red	9,10	Ø4 Red	4,5	Ø8 Red	1,2,3	Ø2 Red		Spare
4	Green			Ground		Ground		Ground		Ground		Ground
5	Orange		6,7,8	Ø6 Yellow	9,10	Ø4 Yellow	4,5	Ø8 Yellow	1,2,3	Ø2 Yellow		Spare
6	Blue		P4	Ø8 Walk		Spare	P3	Ø8 Walk	P1	Ø2 Walk	P2	Ø2 Walk
7	White	Black	P4	Ø8 Don't Walk		Spare	P3	Ø8 Don't Walk	P1	Ø2 Don't Walk	P2	Ø2 Don't Walk
8	Red	Black		Spare						Spare		
9	Green	Black		Spare						Spare		
10	Orange	Black		Spare						Spare		

US 2 & 9th Ave NW
Proposed Wiring

Conductor			Existing Cable 1 (10 No.12 AWG)		Existing Cable 2 (7 No.12 AWG)		Existing Cable 3 (7 No.12 AWG)		Existing Cable 4 (10 No. 12 AWG)		Existing Cable 5 (7 No.12 AWG)	
Run	Base	Tracer	Head	Indication	Head	Indication	Head	Indication	Head	Indication	Head	Indication
1	Black		6,7,8	Ø6 Green	9,10	Ø4 Green	4,5	Ø8 Green	1,2,3	Ø2 Green		Spare
2	White			Neutral		Neutral		Neutral		Neutral		Neutral
3	Red		6,7,8	Ø6 Red	9,10	Ø4 Red	4,5	Ø8 Red	1,2,3	Ø2 Red		Spare
4	Green			Ground		Ground		Ground		Ground		Ground
5	Orange		6,7,8	Ø6 Yellow	9,10	Ø4 Yellow	4,5	Ø8 Yellow	1,2,3	Ø2 Yellow		Spare
6	Blue		P4	Ø8 Walk	9	Ø7 Green Left Arrow	P3	Ø8 Walk	P1	Ø2 Walk	P2	Ø2 Walk
7	White	Black	P4	Ø8 Don't Walk	9	Ø7 Yellow Left Arrow	P3	Ø8 Don't Walk	P1	Ø2 Don't Walk	P2	Ø2 Don't Walk
8	Red	Black		Spare						Spare		
9	Green	Black		Spare						Spare		
10	Orange	Black		Spare						Spare		

Conductor			Proposed Cable 6 (7 No. 12 AWG)		Proposed Cable 7 (10 No. 12 AWG)		Proposed Cable 8 (7 No.12 AWG)		Proposed Cable 9 (7 No. 12 AWG)		Cable 10	
Run	Base	Tracer	Head	Indication	Head	Indication	Head	Indication	Head	Indication	Head	Indication
1	Black		P5	Ø6 Walk	P6	Ø6 Walk		Spare	P8	Ø4 Walk	Cable Number Not Used	Cable Number Not Used
2	White			Neutral		Neutral		Neutral		Neutral		
3	Red		P5	Ø6 Don't Walk	P6	Ø6 Don't Walk		Spare	P8	Ø4 Don't Walk		
4	Green			Ground		Ground		Ground		Ground		
5	Orange			Spare		Spare		Spare		Spare		
6	Blue		6	Ø1 Green Left Arrow	P7	Ø4 Walk	4	Ø3 Green Left Arrow	1	Ø5 Green Left Arrow		
7	White	Black	6	Ø1 Yellow Left Arrow	P7	Ø4 Don't Walk	4	Ø3 Yellow Left Arrow	1	Ø5 Yellow Left Arrow		
8	Red	Black				Spare						
9	Green	Black				Spare						
10	Orange	Black				Spare						

This document was originally issued and sealed by Nicholas J. Erpelding, Registration Number PE- 5870, on 1/23/14 and the original document is stored at the North Dakota Department of Transportation

Notes:
1. Contractor to verify inplace wiring.

Revise Traffic Signal - Site 1

Williston Intersection US 2 & 18th St W & Bison Dr

Conductors
US 2 & 9th Ave NW

STATE	PROJECT NO.	SECTION NO.	SHEET NO.
ND	SOIA-7-002(130)019	150	12

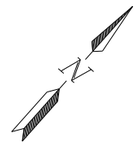

		Phase 1	Phase 2	Phase 3	Phase 4	Phase 5	Phase 6	Phase 7	Phase 8
SIGNAL INDICATIONS & PHASING		EBL	WB	NBL	SB	WBL	EB	SBL	NB
Corresponding Signal Head(s)		6	1,2,3	4	9,10	1	6,7,8	9	4,5
Corresponding Pedestrian Head(s)		-	P1, P2	-	P7,P8	-	P5,P6	-	P3, P4
Backup Prevent Phase		-	1	-	3	-	5	-	7
BASIC INTERVALS (OR FUNCTIONS)									
Minimum Initial		5.0	10.0	5.0	8.0	5.0	10.0	5.0	8.0
Passage Time		3.0	5.0	3.0	4.0	3.0	5.0	3.0	4.0
Maximum (Maximum Green or Ext.Limit)		25.0	40.0	25.0	30.0	25.0	40.0	25.0	30.0
Yellow Change		3.0	4.0	3.0	3.0	3.0	4.0	3.0	3.0
Red Clearance		3.0	2.0	3.5	3.5	3.0	2.0	3.5	3.5
Walk		-	7.0	-	7.0	-	7.0	-	7.0
Pedestrian Clearance		-	19.0	-	30.0	-	18.0	-	28.0
VOLUME DENSITY TIMING FUNCTIONS									
Passage Time		-	5.0	-	-	-	5.0	-	-
Minimum Gap		-	2.0	-	-	-	2.0	-	-
Time to Reduce to Minimum Gap		-	15.0	-	-	-	15.0	-	-
Time Before Reduce		-	15.0	-	-	-	15.0	-	-
OTHER CONTROLLER FUNCTIONS									
Locking Memory			X				X		
Non-Locking Memory		X		X	X	X		X	X
Phase recall (Y/N)		N	Y	N	N	N	Y	N	N
Red Revert		2.0	2.0	2.0	2.0	2.0	2.0	2.0	2.0
Dual Entry			X		X		X		X
Flashing-Normal & Conflict Monitor			Y		R		Y		R
Start Up Phasing		R	G	R	R	R	G	R	R
Type of Detector	Presence	X		X	X	X		X	X
	Calling		X				X		
	Passage		X				X		
Emergency Vehicle Preemption			X		X		X		X

Calling Detectors shall place one call into the controller on the Yellow or Red interval. Calling Detectors shall be disconnected during the Green Interval.

This document was originally issued and sealed by Nicholas J. Erpelding, Registration Number PE- 5870, on 1/23/14 and the original document is stored at the North Dakota Department of Transportation

Note:

All left turn phases shall be leading phases only.

Revise Traffic Signal - Site 1

Williston Intersection US 2 & 18th St W & Bison Dr

Controller Settings
US 2 & 9th Ave NW

STATE	PROJECT NO.	SECTION NO.	SHEET NO.
ND	SOIA-7-002(130)019	150	13

SPEC	CODE	ITEM DESCRIPTION	UNIT	TOTAL
772	200	1IN DIAMETER RIGID CONDUIT	LF	90
772	270	3IN DIAMETER RIGID CONDUIT	LF	460
772	400	NO12 AWG 2 CONDUCTOR CABLE	LF	1420
772	405	NO12 AWG 7 CONDUCTOR CABLE	LF	610
772	408	NO12 AWG 10 CONDUCTOR CABLE	LF	250
772	1832	1-WAY 5 SEC HEAD W/12IN LENS-MA MTD	EA	4
772	2060	PEDESTRIAN COUNTDOWN SIGNAL HEAD-POST MTD	EA	8
772	2200	PEDESTRIAN PUSHBUTTON POST	EA	4
772	9811	REVISE TRAFFIC SIGNAL - SITE 1	EA	1
		Items shown above are for informational purposes; contractor shall provide all labor and equipment necessary for the signal system to be fully operational as shown in the Plans. Items shall be included in the corresponding price bid for "REVISE TRAFFIC SIGNAL - SITE 1."		

This document was originally issued and sealed by Nicholas J. Erpelding, Registration Number PE- 5870, on 1/23/14 and the original document is stored at the North Dakota Department of Transportation

Revise Traffic Signal - Site 1

Williston Intersection US 2 & 18th St W & Bison Dr

Estimated Signal Quantities
US 2 & 9th Ave NW

STATE	PROJECT NO.	SECTION NO.	SHEET NO.
ND	SOIA-7-002(130)019	150	14

STATE	PROJECT NO.	PCN	SECTION NO.	SHEET NO.
ND	SU-7-993(039)046	18770	150	1

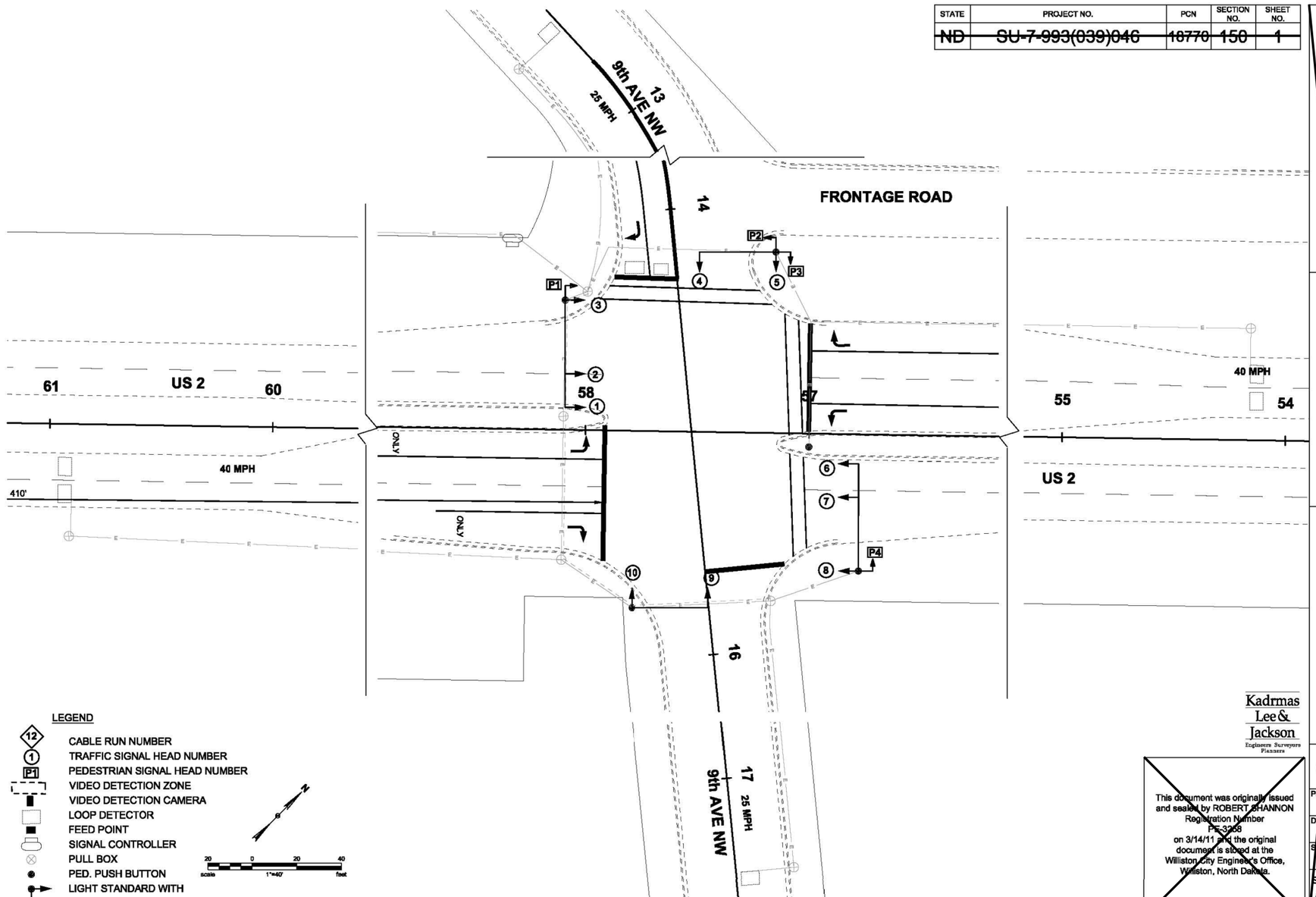

Kadrmas Lee & Jackson
Engineers Surveyors Planners

This document was originally issued and sealed by ROBERT SHANNON Registration Number PE-3358 on 3/14/11 and the original document is stored at the Williston City Engineer's Office, Williston, North Dakota.

CITY OF WILLISTON
ENGINEERING DEPARTMENT
809 5th Street East - Williston, North Dakota 58801

SIGNALS

Street Improvements

Street Improvements

City of WILLISTON

Project: P169

Date: 3/14/11

Scale: 1"=1"

SHEET: 58 OF 86

This document was originally issued and sealed by Nicholas J. Erpelding, Registration Number PE- 5870, on 12/10/13 and the original document is stored at the North Dakota Department of Transportation

Revise Traffic Signal - Site 1

Williston Intersection US 2 & 18th St W & Bison Dr

For Information Only
US 2 & 9th Ave NW
Existing Signal System Plans

STATE	PROJECT NO.	SECTION NO.	SHEET NO.
ND	SOIA-7-002(130)019	150	15

STATE	PROJECT NO.	PCN	SECTION NO.	SHEET NO.
~~ND~~	~~SU-7-993(039)046~~	~~18770~~	~~150~~	~~2~~

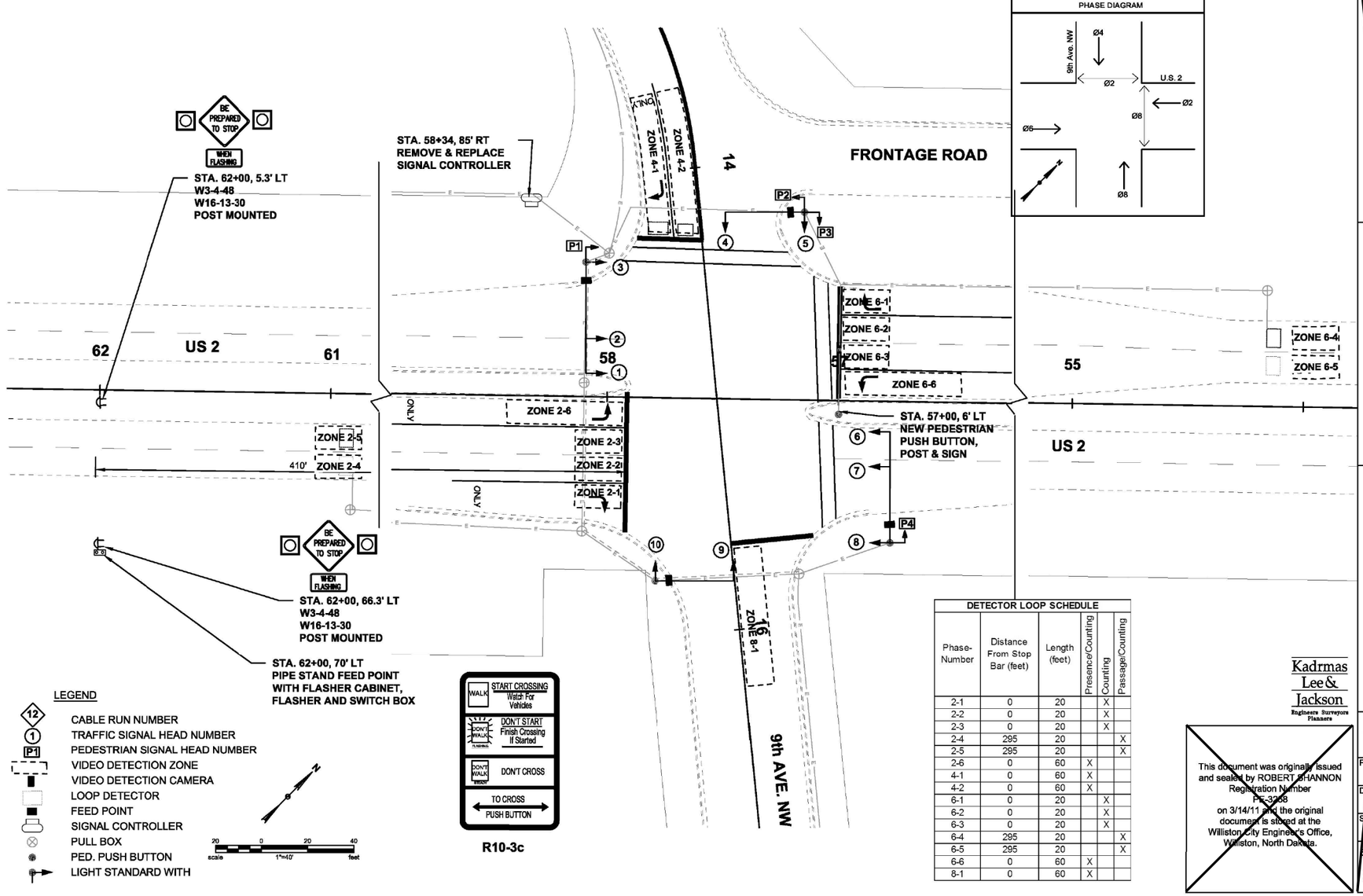

DETECTOR LOOP SCHEDULE

Phase-Number	Distance From Stop Bar (feet)	Length (feet)	Presence/Counting	Counting	Passage/Counting
2-1	0	20		X	
2-2	0	20		X	
2-3	0	20		X	
2-4	295	20			X
2-5	295	20			X
2-6	0	60	X		
4-1	0	60	X		
4-2	0	60	X		
6-1	0	20		X	
6-2	0	20		X	
6-3	0	20		X	
6-4	295	20			X
6-5	295	20			X
6-6	0	60	X		
8-1	0	60	X		

Kadrmas Lee & Jackson
Engineers Surveyors Planners

This document was originally issued and sealed by ROBERT SHANNON Registration Number PE-3768 on 3/14/11 and the original document is stored at the Williston City Engineer's Office, Williston, North Dakota.

CITY OF WILLISTON
ENGINEERING DEPARTMENT
809 5th Street East - Williston, North Dakota 58801

~~SIGNALS~~

~~Street Improvements~~

Street Improvements

City of WILLISTON

Project: P169

Date: 3/14/11

Scale: 1"=1"

SHEET: 59 OF 86

This document was originally issued and sealed by Nicholas J. Erpelding, Registration Number PE- 5870, on 12/10/13 and the original document is stored at the North Dakota Department of Transportation

Revise Traffic Signal - Site 1

Williston Intersection US 2 & 18th St W & Bison Dr

For Information Only
US 2 & 9th Ave NW
Existing Signal System Plans

STATE	PROJECT NO.	SECTION NO.	SHEET NO.
ND	SOIA-7-002(130)019	150	16

STATE	PROJECT NO.	PCN	SECTION NO.	SHEET NO.
~~ND~~	~~SU-7-993(039)046~~	~~18770~~	~~150~~	~~3~~

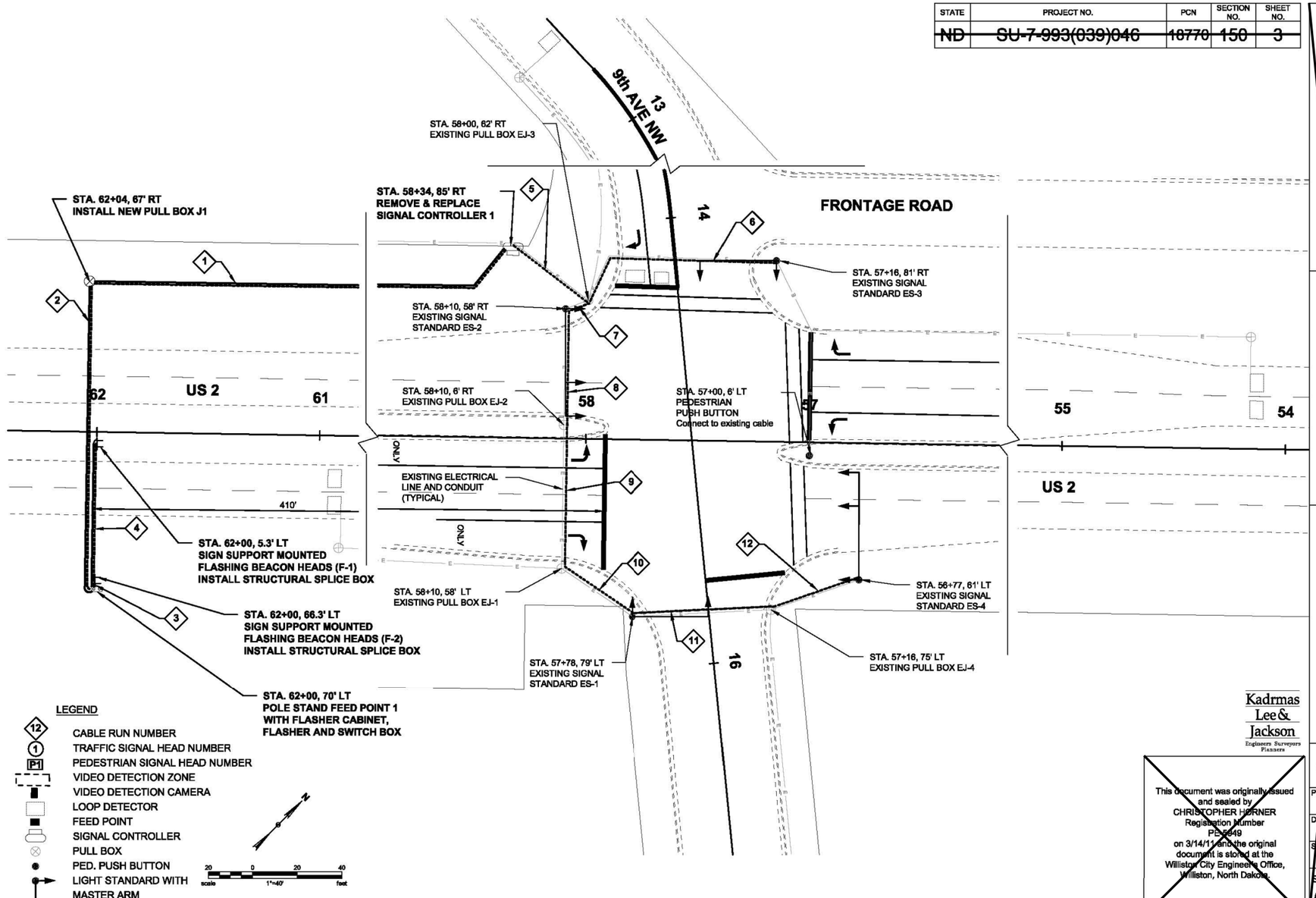

CITY OF WILLISTON
ENGINEERING DEPARTMENT
809 5th Street East - Williston, North Dakota 58801

SIGNALS

Street Improvements

Street Improvements

Kadrmas Lee & Jackson
Engineers Surveyors Planners

~~This document was originally issued and sealed by CHRISTOPHER HORNER Registration Number PE-5649 on 3/14/11 and the original document is stored at the Williston City Engineer's Office, Williston, North Dakota.~~

City of WILLISTON

Project: P169

Date: 3/14/11

Scale: 1"=1"

SHEET: 60 OF 86

This document was originally issued and sealed by Nicholas J. Erpelding, Registration Number PE- 5870, on 12/10/13 and the original document is stored at the North Dakota Department of Transportation

Revise Traffic Signal - Site 1

Williston Intersection US 2 & 18th St W & Bison Dr

For Information Only
US 2 & 9th Ave NW
Existing Signal System Plans

STATE	PROJECT NO.	SECTION NO.	SHEET NO.
ND	SOIA-7-002(130)019	150	17

STATE	PROJECT NO.	PCN	SECTION NO.	SHEET NO.
ND	SU-7-993(039)046	18770	150	4

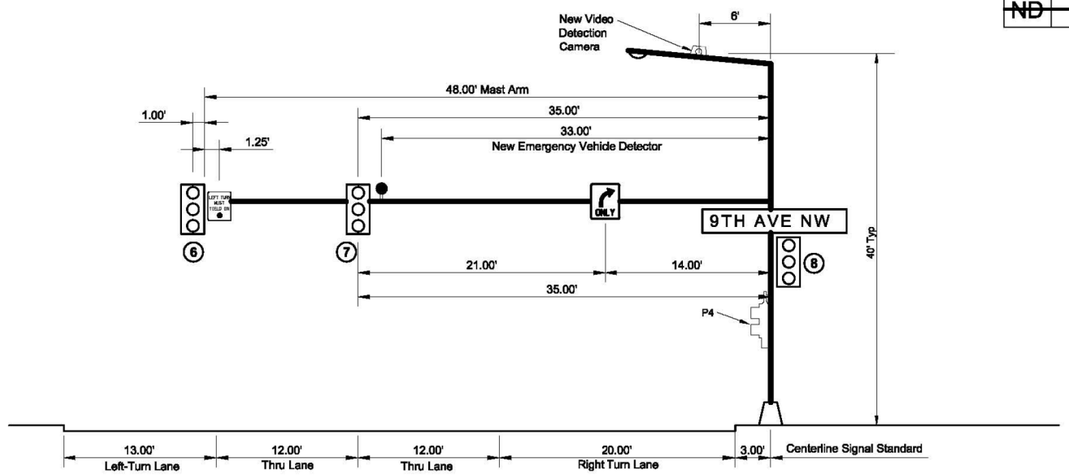

EXISTING SIGNAL STANDARD (ES-4) STA 56+77 ~ 61' LT
(NORTH BOUND ROADWAY)
SOUTH APPROACH CROSS SECTION

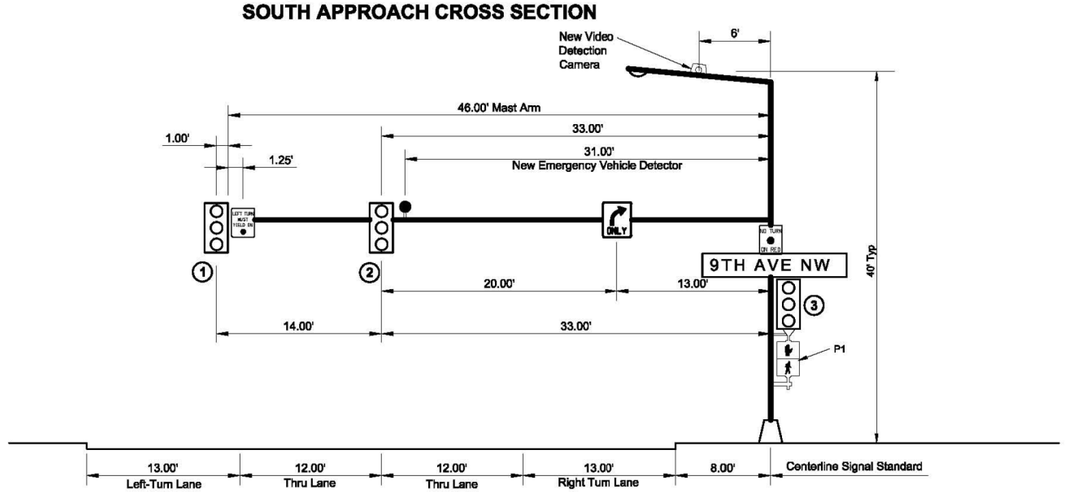

EXISTING SIGNAL STANDARD (ES-2) STA 58+10 ~ 58' RT
(SOUTH BOUND ROADWAY)
NORTH APPROACH CROSS SECTION

CITY OF WILLISTON
ENGINEERING DEPARTMENT
809 5th Street East - Williston, North Dakota 58801

SIGNALS

Street Improvements

Street Improvements

Kadrmas Lee & Jackson
Engineers Surveyors Planners

This document was originally issued and sealed by ROBERT SHANNON Registration Number PE-3768 on 3/14/11 and the original document is stored at the Williston City Engineer's Office, Williston, North Dakota.

City of WILLISTON

Project: P169

Date: 3/14/11

Scale: 1"=1"

SHEET: 61 OF 86

This document was originally issued and sealed by Nicholas J. Erpelding, Registration Number PE- 5870, on 12/10/13 and the original document is stored at the North Dakota Department of Transportation

Revise Traffic Signal - Site 1

Williston Intersection US 2 & 18th St W & Bison Dr

For Information Only
US 2 & 9th Ave NW
Existing Signal System Plans

STATE	PROJECT NO.	SECTION NO.	SHEET NO.
ND	SOIA-7-002(130)019	150	18

STATE	PROJECT NO.	PCN	SECTION NO.	SHEET NO.
ND	SU-7-993(039)046	18770	150	5

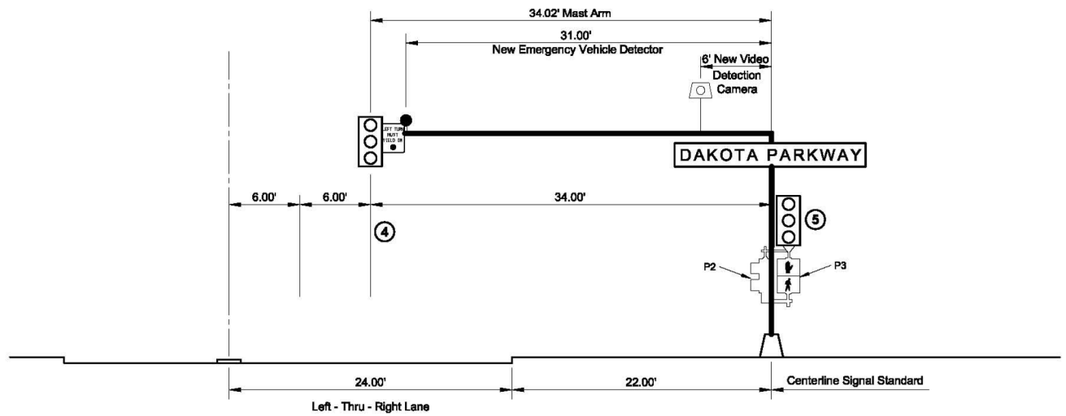

EXISTING SIGNAL STANDARD(ES-3) STA 57+16 ~ 81' RT
(WEST BOUND ROADWAY)
EAST APPROACH CROSS SECTION

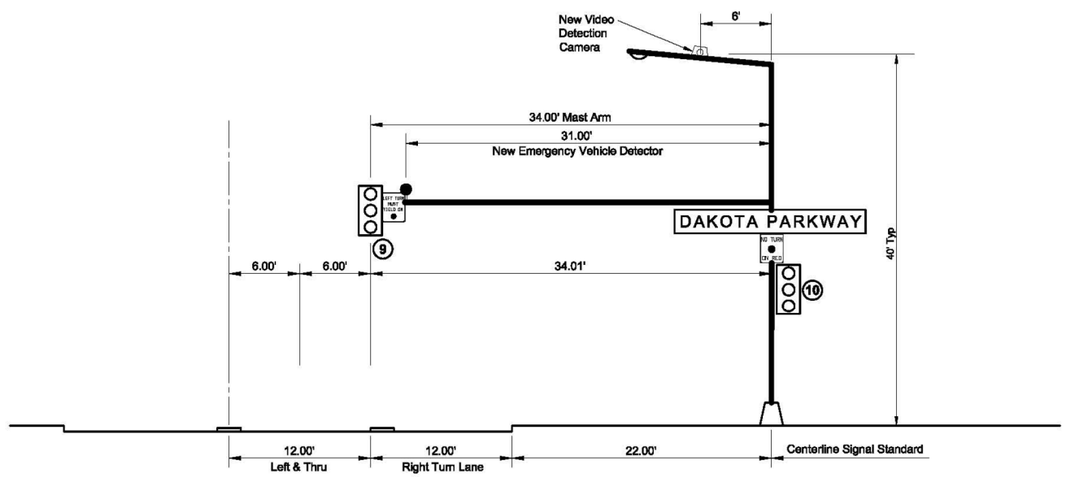

EXISTING SIGNAL STANDARD (ES-1) STA 57+78 ~ 79' LT
(EAST BOUND ROADWAY)
WEST APPROACH CROSS SECTION

~~CITY OF WILLISTON~~
~~ENGINEERING DEPARTMENT~~
~~809 5th Street East - Williston, North Dakota 58801~~

~~SIGNALS~~

~~Street Improvements~~

~~Street Improvements~~

Kadrmas Lee & Jackson
Engineers Surveyors Planners

~~This document was originally issued and sealed by ROBERT SHANNON Registration Number PE-3258 on 3/14/11 and the original document is stored at the Williston City Engineer's Office, Williston, North Dakota.~~

City of WILLISTON

Project: P169

Date: 3/14/11

Scale: 1"=1"

SHEET: 62 OF 86

This document was originally issued and sealed by Nicholas J. Erpelding, Registration Number PE- 5870, on 12/10/13 and the original document is stored at the North Dakota Department of Transportation

Revise Traffic Signal - Site 1

Williston Intersection US 2 & 18th St W & Bison Dr

For Information Only
US 2 & 9th Ave NW
Existing Signal System Plans

STATE	PROJECT NO.	PCN	SECTION NO.	SHEET NO.
~~ND~~	~~SU-7-993(039)046~~	~~18770~~	~~150~~	~~6~~

	Phase 1	Phase 2	Phase 3	Phase 4	Phase 5	Phase 6	Phase 7	Phase 8
	Future	NB	Future	EB	Future	SB	Future	WB
SIGNAL INDICATIONS & PHASING								
Corresponding Signal Head(s)		6, 7, 8		9, 10		1, 2, 3		4, 5
Right-of-Way Display		G		G		G		G
Clearance Display Prior to Next Phase		Y		Y		Y		Y
Corresponding Pedestrian Head(s)		P1, P2						P3, P4
Concurrent Phase		6		8		2		4
Next Phase		4		2		8		6
Overlap - Corresponding Signal Head(s)								
Overlap - Right-of-Way Display								
Overlap - Clearance Display Prior to Next Phase								
BASIC INTERVALS (OR FUNCTIONS)								
Minimum Initial		7.0		5.0		7.0		5.0
Minimum Initial with Pedestrian Actuation		30.0						38.0
Passage Time		5.0				5.0		
Maximum (Maximum Green or Ext. Limit)		29.2		18.1		29.2		18.1
Yellow Change		3.9		3.0		3.9		3.0
Red Clearance		1.9		3.9		1.9		3.9
Walk		7.0						7.0
Pedestrian Clearance		23.0						31.0
Offset to Phase 2 (NB-LTR) at Site 1 - U.S.2 & 9th Ave NW		0.0						
Note: Maximum green times were optimized with no pedestrian actuations. In the event of the pedestrian actuation, maximum green time will be extended.								
VOLUME DENSITY TIMING FUNCTIONS								
Added Initial								
Minimum Initial		7.0				7.0		
Added Initial per Actuation		1.5				1.5		
Actuations Before Added Initial		4				4		
Computed Initial								
Minimum Initial		7.0				7.0		
Maximum Initial		29.2				29.2		
Actuations to Reach Maximum Initial		15				15		
Extensible Initial								
Minimum Initial		7.0				7.0		
Maximum Initial		29.2				29.2		
Added Initial per Actuation		1.5				1.5		
Passage Time		5.0				5.0		
Minimum Gap		2.0				2.0		
Time to Reduce to Minimum Gap		10.0				10.0		
Reduce Gap Every		1.0				1.0		
Reduce Gap Every Second By		0.30				0.30		
Reduce Gap By		3.0				3.0		
OTHER CONTROLLER FUNCTIONS								
Locking Memory		x				x		
Non-Locking Memory				x				x
Flashing-Normal & Conflict Monitor		Y		R		Y		R
Start Up Phasing		G		R		G		R
Type of Detector – Presence		x		x		x		x
Type of Detector – Calling		x				x		
Type of Detector – Passage		x				x		
Emergency Vehicle Pre-emption		x		x		x		x

Calling Detectors shall place one call into the controller on the Yellow or Red interval. Calling Detectors shall be disconnected during the Green Interval.

WB = Westbound
SB = Southbound
EB = Eastbound
NB = Northbound

Y = Yellow Ball Indication
G = Green Ball Indication
GL = Green Left Arrow Indication
YL = Yellow Left Arrow Indication
GR = Green Right Arrow Indication
YR = Yellow Right Arrow Indication

Kadrmas Lee & Jackson
Engineers Surveyors Planners

~~This document was originally issued and sealed by ROBERT SHANNON Registration Number PE-3238 on 3/14/11 and the original document is stored at the Williston City Engineer's Office, Williston, North Dakota.~~

~~CITY OF WILLISTON~~
~~ENGINEERING DEPARTMENT~~
~~809 5th Street East - Williston, North Dakota 58801~~

~~SIGNALS~~

~~Street Improvements~~
~~Street Improvements~~

City of WILLISTON
Project: P169
Date: 3/14/11
Scale: 1"=1"
SHEET: 63 OF 86

This document was originally issued and sealed by Nicholas J. Erpelding, Registration Number PE- 5870, on 12/10/13 and the original document is stored at the North Dakota Department of Transportation

Revise Traffic Signal - Site 1

Williston Intersection US 2 & 18th St W & Bison Dr

For Information Only
US 2 & 9th Ave NW
Existing Signal System Plans

STATE	PROJECT NO.	SECTION NO.	SHEET NO.
ND	SOIA-7-002(130)019	150	20

STATE	PROJECT NO.	PCN	SECTION NO.	SHEET NO.
~~ND~~	~~SU-7-993(039)046~~	~~18770~~	~~150~~	~~7~~

	Phase 1								Phase 2								Phase 3								Phase 4							
	Future								NB								Future								EB							
Head	R	Clear to Phase							R	Clear to Phase							R	Clear to Phase							R	Clear to Phase						
Number	W	2	3	4	5	6	7	8	W	3	4	5	6	7	8	1	W	4	5	6	7	8	1	2	W	5	6	7	8	1	2	3
1																																
2																																
3																																
4																																
5																																
6									G		Y		N		Y																	
7									G		Y		N		Y																	
8									G		Y		N		Y																	
9																									G		Y		N		Y	
10																									G		Y		N		Y	

	Phase 5								Phase 6								Phase 7								Phase 8							
	Future								SB								Future								WB							
Head	R	Clear to Phase							R	Clear to Phase							R	Clear to Phase							R	Clear to Phase						
Number	W	6	7	8	1	2	3	4	W	7	8	1	2	3	4	5	W	8	1	2	3	4	5	6	W	1	2	3	4	5	6	7
1									G		Y		N		Y																	
2									G		Y		N		Y																	
3									G		Y		N		Y																	
4																									G		Y		N		Y	
5																									G		Y		N		Y	
6																																
7																																
8																																
9																																
10																																

Chart A

Phase	Non-conflicting Phase allowed to time concurrently
2	6
4	8
6	2
8	4

Emergency Vehicle Pre-emption Phasing

↑	↓	→	←
Northbound	Southbound	Eastbound	Westbound
Phase 2	Phase 6	Phase 4	Phase 8

Blank spaces denote a "Red" indication
G= Green Ball Indication
Y= Yellow Ball Indication
GL= Green Left Indication
YL= Yellow Left Arrow
GR= Green Right Arrow
YR= Yellow Right Arrow

N= Continue to display right of way indication.
When any phase is on alone, any non-conflicting
phase may start timing without a clearance interval. See Chart A.

Kadrmas Lee & Jackson
Engineers Surveyors Planners

This document was originally issued and sealed by ROBERT SHANNON Registration Number PE-3258 on 3/14/11 and the original document is stored at the Williston City Engineer's Office, Williston, North Dakota.

~~CITY OF WILLISTON~~
~~ENGINEERING DEPARTMENT~~
~~809 5th Street East - Williston, North Dakota 58801~~

~~SIGNALS~~

~~Street Improvements~~
~~Street Improvements~~

City of WILLISTON
Project: P169
Date: 3/14/11
Scale: 1"=1"
SHEET: 64 OF 86

This document was originally issued and sealed by Nicholas J. Erpelding, Registration Number PE- 5870, on 12/10/13 and the original document is stored at the North Dakota Department of Transportation

Revise Traffic Signal - Site 1

Williston Intersection US 2 & 18th St W & Bison Dr

For Information Only
US 2 & 9th Ave NW
Existing Signal System Plans

STATE	PROJECT NO.	SECTION NO.	SHEET NO.
ND	SOIA-7-002(130)019	150	21

STATE	PROJECT NO.	PCN	SECTION NO.	SHEET NO.
~~ND~~	~~SU-7-993(039)046~~	~~18770~~	~~150~~	~~8~~

CABLE & CONDUIT SCHEDULE - US 2 & 9th Avenue

RUN	ITEM	STATION OFFSET	CONDUIT RUN TOTAL LF	CONDUIT RUN SIZE (IN)	CABLE RUN TOTAL LF		CABLE RUN SIZE/TYPE	CABLE #
1	Signal Controller 1 to Pull Box J-1	58+34, 85' RT to 62+04, 67' RT	374	2"	389	B	**Proposed** (1) 12 AWG 5 Conductor Cable	7
2	Pull Box J-1 to Flasher Feedpoint 1	62+04, 67' RT to 62+00, 67' LT	133	2"	154	B	**Proposed** (1) 12 AWG 5 Conductor Cable	7
3	Flasher Feedpoint 1 to Flasher Beacon Heads F-2	62+00, 67' LT to 62+00, 61' LT	8	2"	38	B	**Proposed** (1) 12 AWG 5 Conductor Cable	7
4	Flashing Beacon Heads F-2 to Flasher Beacon Heads F-1	62+04, 67' RT to 58+34, 85' RT	58	2"	88	B	**Proposed** (1) 12 AWG 5 Conductor Cable	7
5	Signal Controller 1 to Pull Box EJ-3	58+34, 85' RT to 58+00, 62' RT	42	Existing 3 1/2"	228 228 228	C D E	**Proposed** (4) 12 AWG 2 Conductor Cable (4) Emergency Detector Cable (4) Video Detection Cable **Existing** (5) Loop Lead-In Cable (4) 12 AWG 2 Conductor Cable (3) 12 AWG 7 Conductor Cable (2) 12 AWG 10 Conductor Cable	2, 3, 5 1, 4
6	Pull Box EJ-3 to Signal Standard ES-3	58+00, 62' RT to 57+16, 81' RT	96	Existing 2"	161 161 161	C D E	**Proposed** (1) 12 AWG 2 Conductor Cable (1) Emergency Detector Cable (1) Video Detection Cable **Existing** (1) Loop Lead-In Cables (1) 12-2 Conductor (2) 12-7 Conductors	3, 5
7	Pull Box EJ-3 to Signal Standard ES-2	58+00, 62' RT to 56+10, 59' RT	9	Existing 3"	258 258 258	C D E	**Proposed** (3) 12 AWG 2 Conductor Cable (3) Emergency Detector Cable (3) Video Detection Cable **Existing** (2) Loop Lead-In Cable (2) 12 AWG 2 Conductor Cable (2) 12 AWG 7 Conductor Cable (2) 12 AWG 10 Conductor Cable	2, 5 1, 4
8	Signal Standard ES-2 to Pull Box EJ-2	56+10, 59' RT to 58+10, 6' RT	51	Existing 3"	256 256 256	C D E	**Proposed** (2) 12 AWG 2 Conductor Cable (2) Emergency Detector Cable (2) Video Detection Cable **Existing** (2) Loop Lead-In Cables (1) 12-2 Conductor (2) 12-7 Conductors (1) 12-10 Conductors	2, 5 1
9	Pull Box EJ-2 to Pull Box EJ-1	58+10, 6' RT to 58+10, 56' LT	63	Existing 3"	150 150 150	C D E	**Proposed** (2) 12 AWG 2 Conductor Cable (2) Emergency Detector Cable (2) Video Detection Cable **Existing** (2) Loop Lead-In Cables (1) 12-2 Conductor (2) 12-7 Conductors (1) 12-10 Conductors	2, 5 1
10	Pull Box EJ-1 to Signal Standard ES-1	58+10, 10' LT to 57+78, 79' LT	30	Existing 2 1/2"	190 190 190	C D E	**Proposed** (2) 12 AWG 2 Conductor Cable (2) Emergency Detector Cable (2) Video Detection Cable **Existing** (1) Loop Lead-In Cables (1) 12-2 Conductor (2) 12-7 Conductors (1) 12-10 Conductors	2, 5 1
11	Signal Standard ES-1 to Pull Box EJ-4	57+78, 79' LT to 57+16, 75' LT	68	Existing 2 1/2"	134 134 134	C D E	**Proposed** (1) 12 AWG 2 Conductor Cable (1) Emergency Detector Cable (1) Video Detection Cable **Existing** (1) Loop Lead-In Cables (1) 12-2 Conductor (1) 12-7 Conductors (1) 12-10 Conductors	5 1
12	Pull Box EJ-4 to Signal Standard ES-4	57+16, 75' LT to 56+77, 61' LT	40	Existing 2 1/2"	119 119 119	C D E	**Proposed** (1) 12 AWG 2 Conductor Cable (1) Emergency Detector Cable (1) Video Detection Cable **Existing** (1) 12-2 Conductor (1) 12-7 Conductors (1) 12-10 Conductors	5 1

A Pedestrian Push Button Cable
B Signal Control Cable
C Emergency Vehicle Indicator Lamp
D Emergency Vehicle Detector Cable
E Loop Lead-In Cable

A Pedestrian Push Button Cable
B Signal Control Cable
C Emergency Vehicle Indicator Lamp
D Emergency Vehicle Detector Cable
E Loop Lead-In Cable

~~CITY OF WILLISTON~~
ENGINEERING DEPARTMENT
~~809 5th Street East - Williston, North Dakota 58801~~

~~SIGNALS~~

~~Street Improvements~~

~~Street Improvements~~

Kadrmas Lee & Jackson
Engineers Surveyors Planners

~~This document was originally issued and sealed by CHRISTOPHER HORNER Registration Number PE-5649 on 3/14/11 and the original document is stored at the Williston City Engineer's Office, Williston, North Dakota.~~

City of WILLISTON

Project: P169

Date: 3/14/11

Scale: 1"=1"

SHEET: 65 OF 86

This document was originally issued and sealed by Nicholas J. Erpelding, Registration Number PE- 5870, on 12/10/13 and the original document is stored at the North Dakota Department of Transportation

Revise Traffic Signal - Site 1

Williston Intersection US 2 & 18th St W & Bison Dr

For Information Only
US 2 & 9th Ave NW
Existing Signal System Plans

BRIDGE CODE		STATE	PROJECT NUMBER	SECTION NO.	SHEET NO.
X281		ND	SOIA-7-002(130)019	170	1

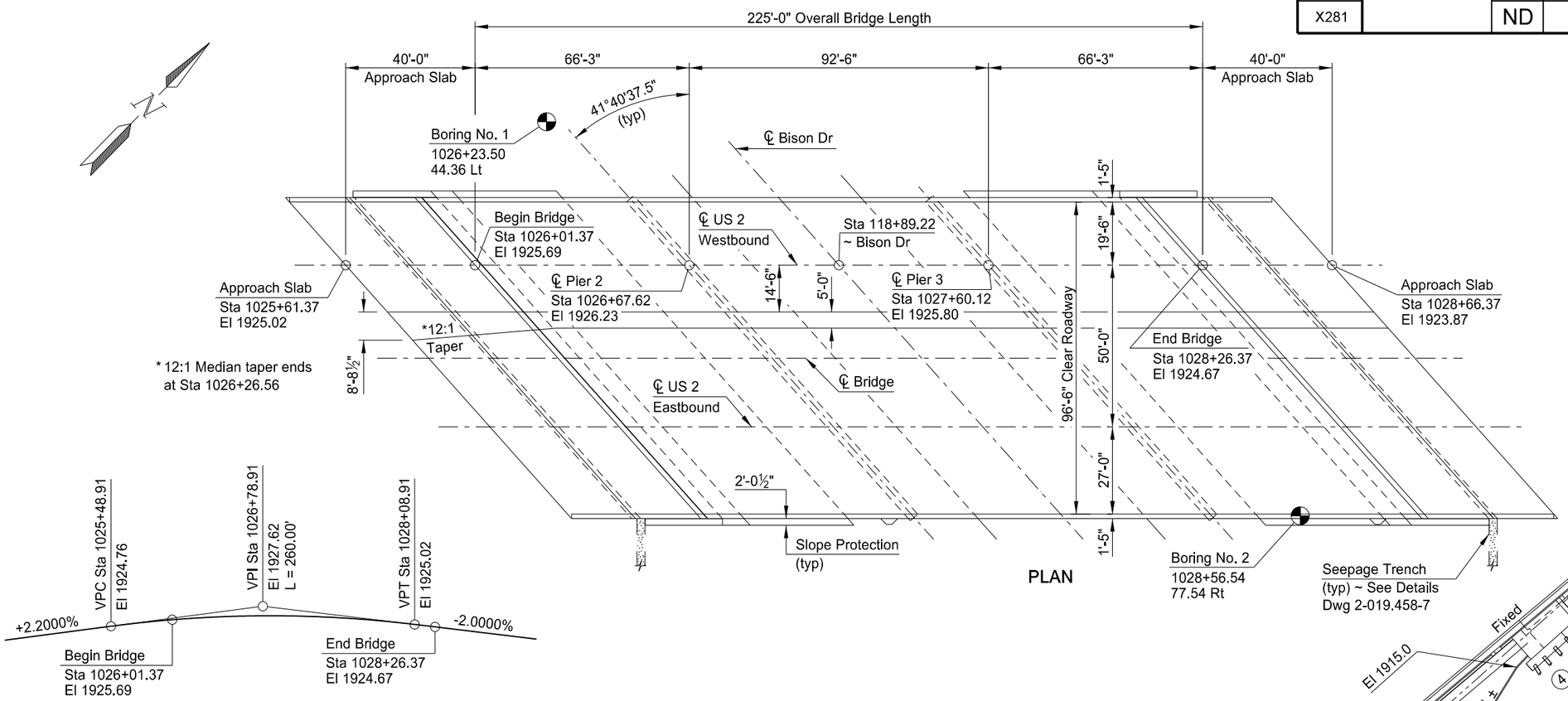

PLAN

VERTICAL CURVE DATA
℄ US 2 WESTBOUND

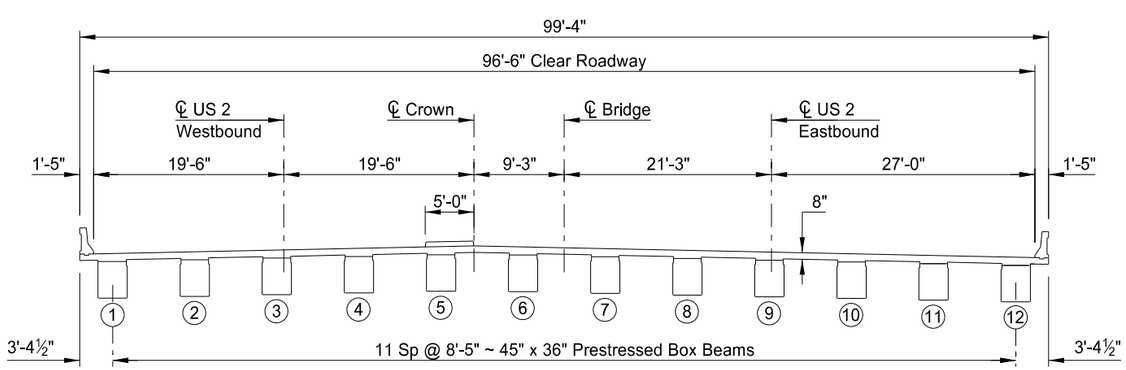

TYPICAL SECTION

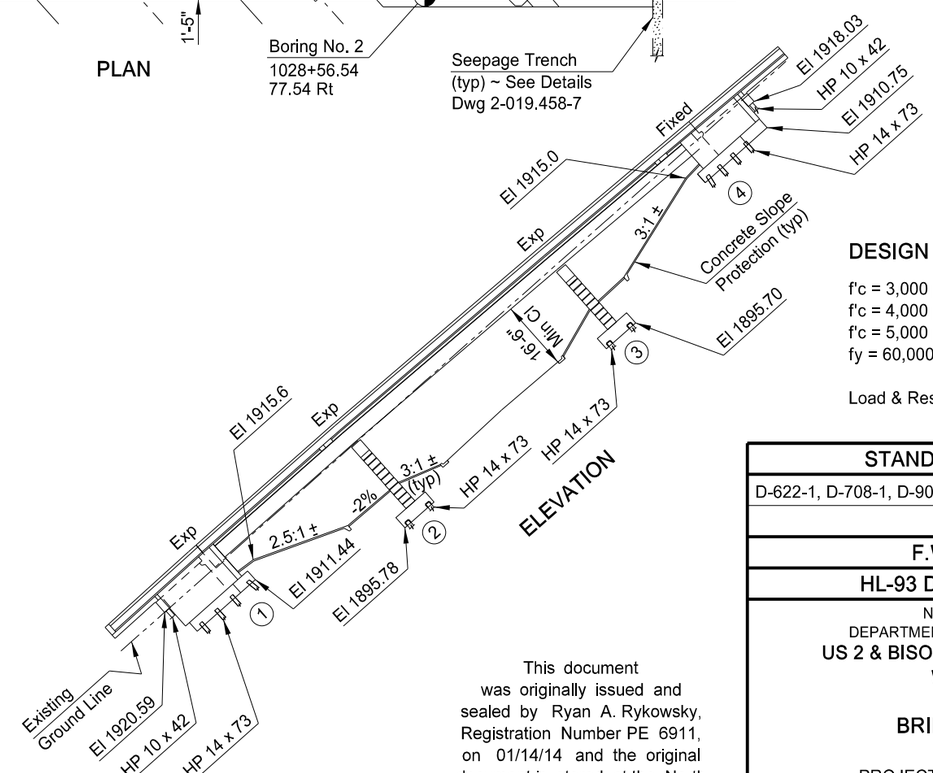

ELEVATION

DESIGN STRENGTHS:

f'c = 3,000 psi ~ Class AE-3 Concrete
f'c = 4,000 psi ~ Class AAE-3 Concrete
f'c = 5,000 psi ~ Prestressed Beam Concrete
fy = 60,000 psi ~ Reinforcing Steel

Load & Resistance Factor Design

SURVEY CONTROL POINTS			
POINT	NORTHING	EASTING	ELEVATION
RTK1	439,207.40	1,201,912.65	1919.86
RTK2	439,412.09	1,201,896.88	1915.92

This document was originally issued and sealed by Ryan A. Rykowsky, Registration Number PE 6911, on 01/14/14 and the original document is stored at the North Dakota Department of Transportation

STANDARD DRAWINGS
D-622-1, D-708-1, D-900-1
F.W.S. 15 PSF
HL-93 DESIGN LOADING

NORTH DAKOTA
DEPARTMENT OF TRANSPORTATION
US 2 & BISON DRIVE/18TH STREET
WILLISTON

BRIDGE LAYOUT

PROJECT: SOIA-7-002(130)019
STATION: 1027+13.87
WILLIAMS COUNTY

01/21/14 — DATE
Terrence R. Udland — BRIDGE ENGINEER

NOTES

100 SCOPE OF WORK: Work at this site consists of building a new 3-span prestressed concrete spread box beam bridge with an overall bridge length of 225'-0" and a clear roadway width of 96'-6".

100 GENERAL: The cost of furnishing and placing preformed expansion joint filler, concrete inserts, rebar couplers, conduit, silicone sealant, and other miscellaneous items shall be included in the price bid for Class AE-3 and AAE-3 concrete.

210 EXCAVATION: The excavation at the abutments and approach slabs, as shown, and the excavation required to build the piers shall be included in the lump sum bid item, “Class 1 Excavation.”

210 SELECT BACKFILL: Select backfill shall meet the requirements of Section 816.03, Class 3. The backfill shall be placed in layers of not more than 6 inches, moistened or dried as required, and thoroughly compacted with mechanical tamping equipment. Moisture and density controls shall be in accordance with Section 203.02 G of the Standard Specifications and compacted to 90% of maximum dry density as determined by AASHTO T-180. The work and material needed for placing the select backfill shall not be bid separately but shall be included in the pay item, “Abutment Underdrain System.”

602 BRIDGE APPROACH SLABS: Mechanical finishing of the approach slabs shall be required. A tine finish shall be applied using the deck tining requirements. Tining shall start 6" from the beginning and end of the approach slabs. A surface tolerance of 3/16" in 10 feet is also required.

602 DIAPHRAGMS AND END BEAMS: The intermediate diaphragm concrete shall be placed before the deck concrete and shall cure for at least 72 hours before deck placement. The pier diaphragm and end beam concrete shall be placed at the same time as the deck concrete.

602 SURFACE FINISH “D”: Surface Finish “D” shall be required on all exposed substructure surfaces, the fascia of the exterior beams, the outside edges of the pier diaphragm, the outside edges of the deck and on all barrier surfaces. The surface finish color shall be brown, color number 30475, and shall meet Federal Standard 595B. This work shall be included in the price bid for Class AE-3 and AAE-3 concrete.

602 DECK CONCRETE: Beams have slight variations in the anticipated camber. To build the deck to the designated thickness will require slight adjustments in deck elevation and/or riser dimensions. These adjustments result in minor concrete quantity discrepancies. The Contractor shall consider this quantity discrepancy when he bids the unit price for Class AAE-3 concrete. The Department will pay plan quantity of Class AAE-3 concrete.

602 PENETRATING WATER REPELLENT TREATMENT: Penetrating water repellent shall be applied to the driving surface of the concrete deck.

602 BRIDGE DECK AND APPROACH SLAB CURING: The bridge deck and approach slabs shall be cured by the wet-cure method. No work shall be done on the bridge deck or approach slabs while the wet cure is in progress, including forming the barriers. No vehicles or equipment not required in the curing process shall be on the bridge deck or approach slabs.

602 DECK PLACEMENT: The deck concrete shall be placed at a minimum rate of 65 CY per hour.

602 CONCRETE PROTECTIVE COATING: The beam ends and the sides of the beams for a distance of one foot at the Abutments shall receive a protective coating.

The product used may be Sikagard 62 (two coats) by Sika Corporation, Dural 356 (two coats) by Tamms Industries, EpoxySystems Product #250 (two coats) by Epoxy Systems Inc., or an approved equal. The coating shall be applied according to the manufacturer’s recommendations. The top coat shall be gray. The cost of applying the protective coating shall be included in the price bid for Class AE-3 and AAE-3 concrete.

616 STRUCTURAL STEEL: Structural steel shall be AASHTO M 270, Grade 50T2, except the requirement for Charpy V-Notch test is waived. The total weight of structural steel is approximately 37,000 pounds.

The anchor rods shall meet ASTM A 449.

622 PILING: Piling shall be driven with a steam, air, or diesel hammer with a rated energy and ram weight not less than 104,394 foot-pound-tons, as computed by the formula W(E–19,404) + 1.076E, where W is the weight of the ram in tons and E is the rated hammer energy. In no case shall the ram weight be less than 4,600 pounds. The hammer shall be run at an energy that produces an average penetration at bearing between ½" and 3 inches.

630 PAINT AND PAINTING: The structural steel shall be painted according to the specifications. The finish coats shall be brown, color number 30475, and shall meet Federal Standard 595B.

SHOP DRAWINGS: The Contractor shall submit the following shop drawings to the Engineer for review:

1. Prestressed Box Beams
2. Bearings
3. Joints

This document was originally issued and sealed by Ryan A. Rykowsky, Registration Number PE-6691, on 01/14/14 and the original document is stored at the North Dakota Department of Transportation.

STATE	PROJECT NUMBER	SECTION NO.	SHEET NO.
ND	SOIA-7-002(130)019	170	3

℄ BEAM 12	℄ BEAM 11	℄ BEAM 10	℄ BEAM 9	℄ BEAM 8	℄ BEAM 7	℄ BEAM 6	℄ BEAM 5	℄ BEAM 4	℄ BEAM 3	℄ BEAM 2	℄ BEAM 1
1925.48	1925.63	1925.78	1925.91	1926.03	1926.14	1926.25	1926.21	1925.94	1925.67	1925.39	1925.10
1925.49	1925.64	1925.79	1925.92	1926.05	1926.17	1926.28	1926.24	1925.98	1925.71	1925.43	1925.14
.51	.67	.83	1925.97	.10	.23	.34	.31	1926.06	.80	.53	.25
.53	.70	.86	1926.01	.15	.28	.41	.38	.13	.88	62	.34
.53	.71	.88	.04	.19	.33	.46	.44	.20	1925.96	.70	.43
.53	.72	.89	.06	.21	.36	.50	.49	.26	1926.02	.77	.52
.52	.71	.89	.07	.23	.39	.53	.53	.31	.08	.84	.59
.50	.70	.89	.07	.24	.40	.56	.56	.35	.12	.89	.65
.46	.67	.87	.06	.24	.41	.57	.58	.38	.16	.93	.70
.42	.64	.84	.04	.23	.40	.57	.59	.39	.19	.97	.74
.37	.59	.81	1926.01	.21	.39	.57	.60	.41	.20	.99	.78
1925.31	1925.54	1925.77	1925.98	1926.18	1926.37	1926.56	1926.59	1926.41	1926.22	1926.01	1925.80
1925.31	1925.54	1925.76	1925.97	1926.18	1926.37	1926.56	1926.59	1926.41	1926.22	1926.02	1925.81
.28	.52	.75	.98	.19	.40	.59	.64	.47	.29	.10	.90
.23	.48	.72	.96	.18	.40	.61	.67	.51	.34	.16	1925.97
.15	.42	.67	.92	.16	.38	.60	.67	.52	.36	.20	1926.02
1925.05	.33	.60	.85	.10	.34	.57	.65	.51	.37	.21	.04
1924.93	.21	.49	.76	1926.02	.27	.51	.60	.47	.34	.19	.04
.77	1925.07	.36	.64	1925.91	.17	.42	.52	.41	.28	.15	1926.00
.59	1924.90	.20	.49	.77	1926.04	.30	.42	.31	.20	1926.07	1925.94
.38	.70	1925.01	.31	.60	1925.89	1926.16	.29	.19	1926.09	1925.98	.85
1924.15	.48	1924.80	1925.11	.41	.71	1925.99	1926.13	1926.05	1925.96	.85	.74
1923.92	1924.24	1924.57	1924.89	1925.21	1925.51	1925.81	1925.96	1925.88	1925.80	1925.71	1925.61
1923.90	1924.22	1924.55	1924.87	1925.19	1925.50	1925.79	1925.94	1925.87	1925.79	1925.70	1925.60
.78	1924.11	.43	.76	1925.08	.40	.70	.86	.79	.72	.64	.55
.67	1923.99	.32	.64	1924.97	.29	.60	.77	.71	.65	.57	.49
.55	.87	.20	.52	.85	.17	.50	.67	.62	.56	.50	.42
.43	.75	1924.08	.40	.73	1925.05	.38	.56	.52	.47	.41	.34
.30	.63	1923.95	.28	.60	1924.93	.25	.44	.41	.36	.31	.25
.18	.50	.83	.15	.48	.80	.13	.31	.29	.25	.21	.16
1923.04	.37	.70	1924.02	.35	.67	1925.00	.18	.16	.13	1925.09	1925.05
1922.91	.24	.56	1923.89	.21	.54	1924.86	1925.05	1925.02	1925.00	1924.97	1924.93
.78	1923.10	.43	.75	1924.08	.40	.73	1924.91	1924.89	1924.86	.84	.81
1922.64	1922.96	1923.29	1923.61	1923.94	1924.26	1924.59	1924.78	1924.75	1924.72	1924.70	1924.67
1922.58	1922.91	1923.23	1923.56	1923.88	1924.21	1924.53	1924.72	1924.69	1924.67	1924.64	1924.62

2'-9" Begin Bridge

10 Eq Sp = 63'-0": End of Beam Abut 1 — End of Beam Pier 2 — 1'-0"

10 Eq Sp = 91'-6": End of Beam Pier 2 — End of Beam Pier 3 — 1'-0"

10 Eq Sp = 63'-0": End of Beam Pier 3 — End of Beam Abut 4

2'-9" End Bridge

Beam 1 is the north beam.

SCREED ELEVATIONS

BRIDGE BID ITEMS

SPEC	CODE	ITEM DESCRIPTION	UNIT	QUANTITY
210	0101	CLASS 1 EXCAVATION	L SUM	1
210	0201	FOUNDATION PREPARATION	EA	1
602	0130	CLASS AAE-3 CONCRETE	CY	685.8
602	1130	CLASS AE-3 CONCRETE	CY	1,237.0
602	1133	CONCRETE BRIDGE APPROACH SLAB	SY	436.6
602	1134	PILE SUPPORTED APPROACH SLAB	SY	446.4
602	1250	PENETRATING WATER REPELLENT TREATMENT	SY	2,280
604	9645	PRESTRESSED BOX BEAM-45 IN	LF	2,610.0
612	0115	REINFORCING STEEL-GRADE 60	LBS	120,704
612	0116	REINFORCING STEEL-GRADE 60-EPOXY COATED	LBS	150,069
616	5890	STRUCTURAL STEEL	L SUM	1
622	0020	STEEL PILING HP10 X 42	LF	1,800
622	0060	STEEL PILING HP14 X 73	LF	10,840
708	1100	SLOPE PROTECTION CONCRETE	SY	1,000
750	0200	CONCRETE MEDIAN PAVING	SY	179.3
930	3000	BRIDGE BENCH MARKS	SET	1
930	8600	ELASTOMERIC BEARING PAD	SF	94.0
930	8666	4IN EXPANSION JOINT STRIP SEAL	LF	130.2
930	9537	ABUTMENT UNDERDRAIN SYSTEM	EA	2

This document was originally issued and sealed by Ryan A. Rykowsky, Registration Number PE 6691, on 01/14/14 and the original document is stored at the North Dakota Department of Transportation

US 2 & BISON DRIVE/18TH STREET
WILLISTON

SCREED ELEVATIONS &
BID ITEM QUANTITIES

STATE	PROJECT NUMBER	SECTION NO.	SHEET NO.
ND	SOIA-7-002(130)019	170	4

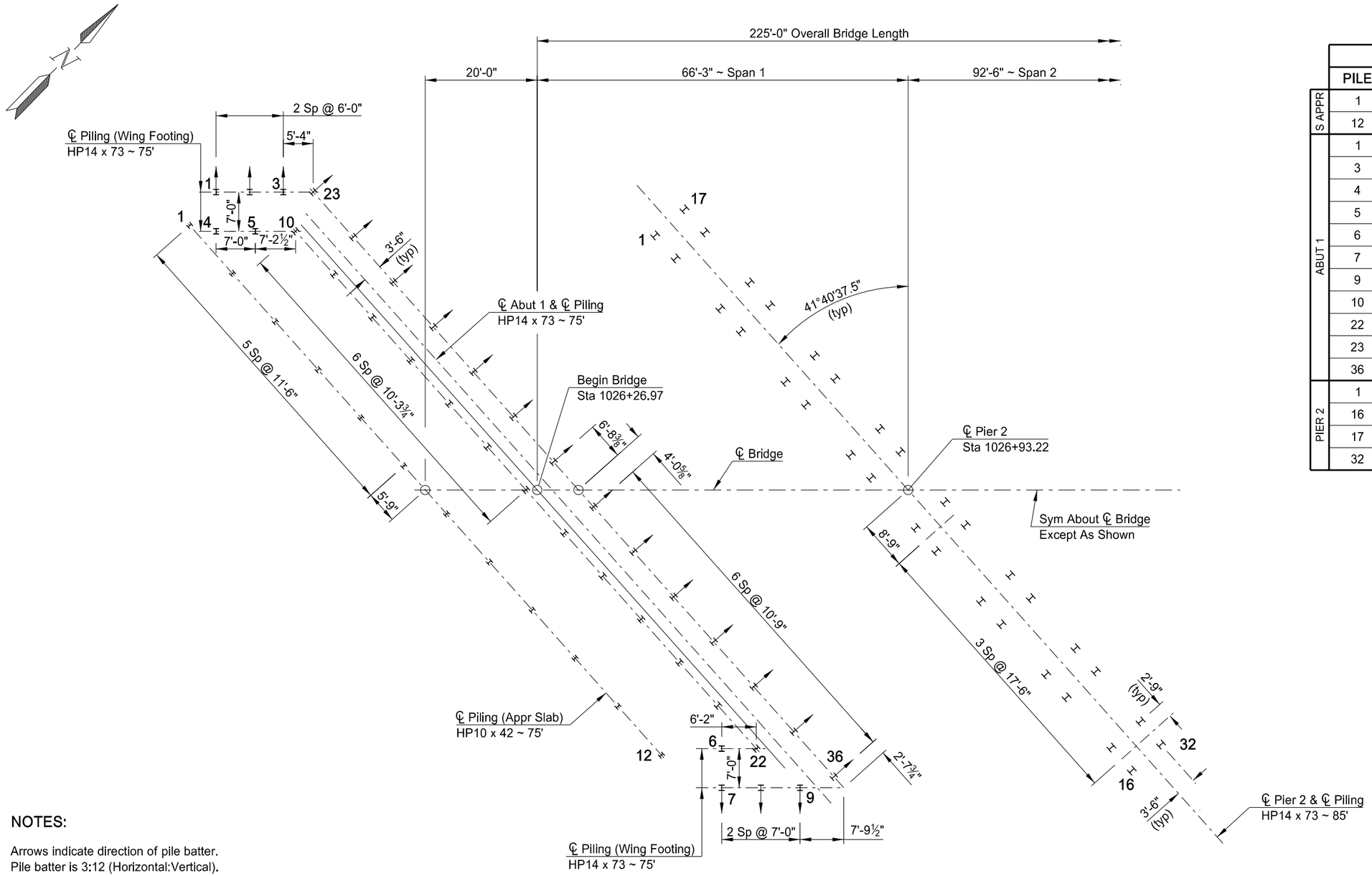

	PILE COORDINATES		
	PILE	NORTHING	EASTING
S APPR	1	439,303.27	1,201,880.83
	12	439,294.16	1,202,007.00
ABUT 1	1	439,310.84	1,201,880.05
	3	439,319.20	1,201,888.65
	4	439,305.82	1,201,884.93
	5	439,310.70	1,201,889.95
	6	439,302.49	1,202,014.08
	7	439,297.48	1,202,018.96
	9	439,307.23	1,202,029.00
	10	439,315.71	1,201,895.11
	22	439,306.80	1,202,018.52
	23	439,322.92	1,201,892.48
	36	439,312.85	1,202,031.94
PIER 2	1	439,359.96	1,201,941.67
	16	439,350.74	1,202,069.33
	17	439,366.94	1,201,942.17
	32	439,357.72	1,202,069.84

This document was originally issued and sealed by Ryan A. Rykowsky, Registration Number PE 6691, on 01/14/14 and the original document is stored at the North Dakota Department of Transportation

NOTES:

Arrows indicate direction of pile batter.
Pile batter is 3:12 (Horizontal:Vertical).

For double acting or single acting diesel hammers, the safe bearing value of piles shall be determined by the following formula:

$$P = \frac{4.5E}{S + 0.2} \times \frac{W + 0.2M}{W + M}$$

HP10 x 42 Pile shall be driven to 105 tons.
HP14 x 73 Pile shall be driven to 180 tons.

PILING LAYOUT

US 2 & BISON DRIVE/18TH STREET
WILLISTON

PILING LAYOUT

STATE	PROJECT NUMBER	SECTION NO.	SHEET NO.
ND	SOIA-7-002(130)019	170	5

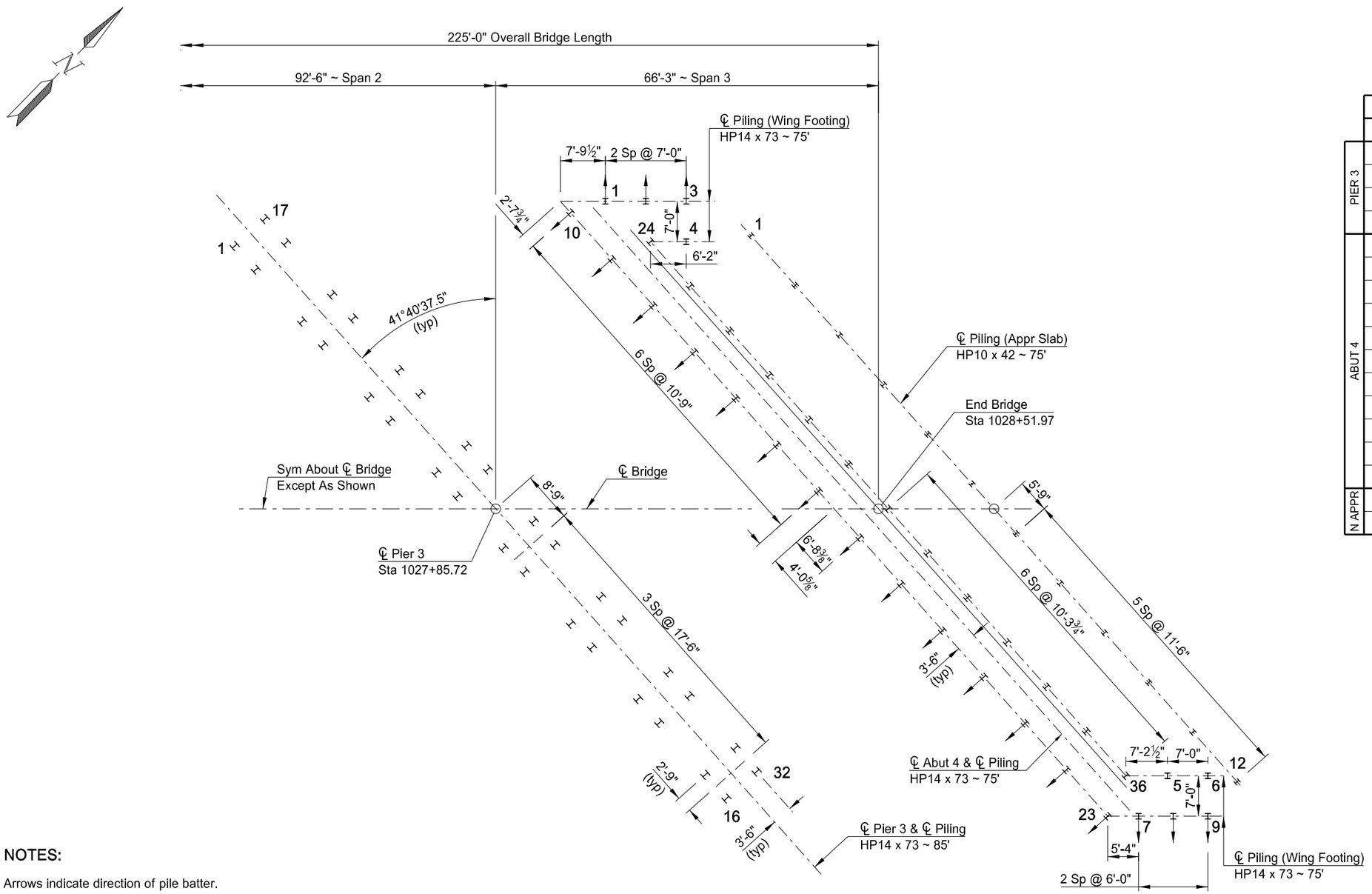

PILE COORDINATES			
	PILE	NORTHING	EASTING
PIER 3	1	439,424.44	1,202,007.99
	16	439,415.22	1,202,135.65
	17	439,431.42	1,202,008.49
	32	439,422.20	1,202,136.16
ABUT 4	1	439,474.69	1,202,048.58
	3	439,484.45	1,202,058.62
	4	439,479.43	1,202,063.50
	5	439,471.23	1,202,187.64
	6	439,476.11	1,202,192.65
	7	439,462.73	1,202,188.93
	9	439,471.09	1,202,197.53
	10	439,469.07	1,202,045.64
	23	439,459.01	1,202,185.11
	24	439,475.12	1,202,059.07
	36	439,466.22	1,202,182.48
N APPR	1	439,488.00	1,202,070.83
	12	439,478.89	1,202,197.00

This document was originally issued and sealed by Ryan A. Rykowsky, Registration Number PE 6691, on 01/14/14 and the original document is stored at the North Dakota Department of Transportation

NOTES:

Arrows indicate direction of pile batter.
Pile batter is 3:12 (Horizontal:Vertical).

For double acting or single acting diesel hammers, the safe bearing value of piles shall be determined by the following formula:

$$P = \frac{4.5E}{S + 0.2} \times \frac{W + 0.2M}{W + M}$$

HP10 x 42 Pile shall be driven to 105 tons.
HP14 x 73 Pile shall be driven to 180 tons.

PILING LAYOUT

US 2 & BISON DRIVE/18TH STREET
WILLISTON

PILING LAYOUT

STATE	PROJECT NUMBER	SECTION NO.	SHEET NO.
ND	SOIA-7-002(130)019	170	6

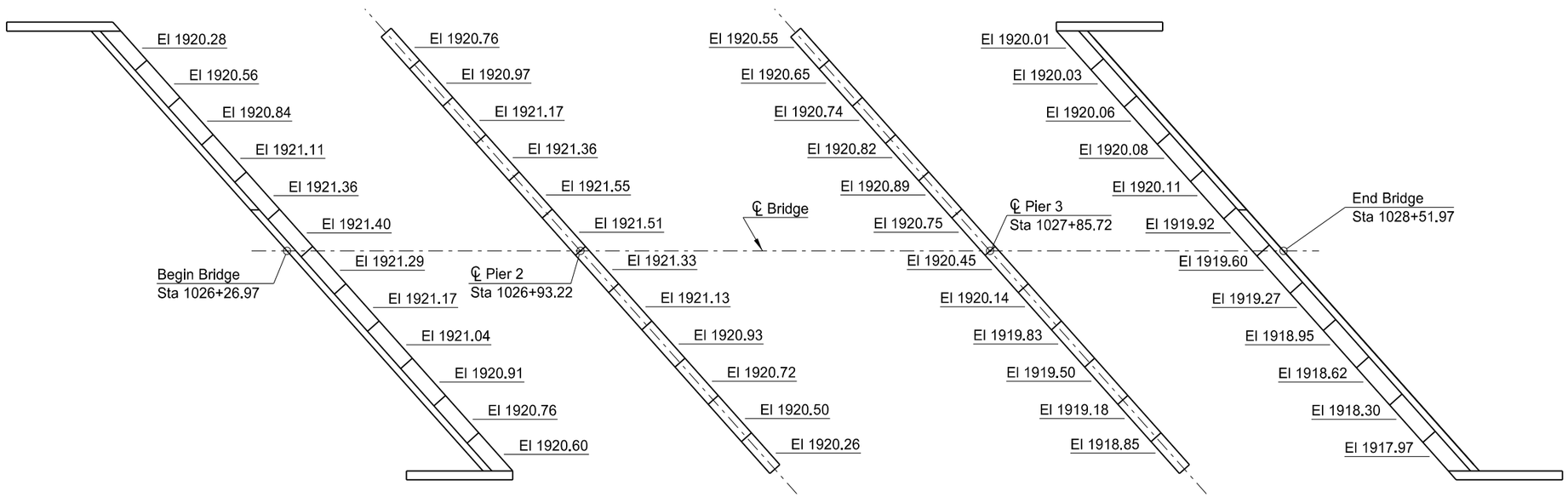

Elevations shown are to top of finished concrete.

BEARING ELEVATIONS

This document was originally issued and sealed by Ryan A. Rykowsky, Registration Number PE 6691, on 01/14/14 and the original document is stored at the North Dakota Department of Transportation

US 2 & BISON DRIVE/18TH STREET
WILLISTON

BEARING ELEVATIONS

STATE	PROJECT NUMBER	SECTION NO.	SHEET NO.
ND	SOIA-7-002(130)019	170	7

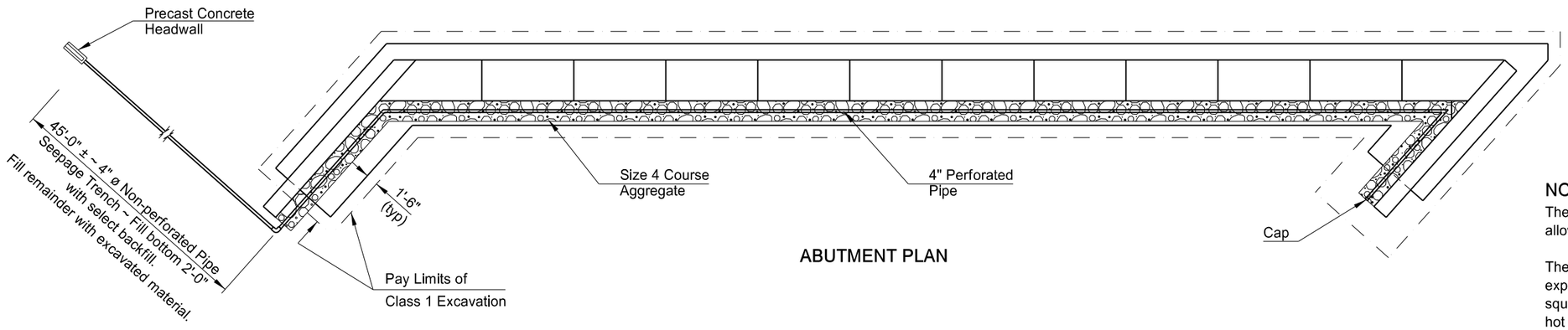

ABUTMENT PLAN

NOTES:

The dimensions for the rodent screen are approximate to allow for bending and a snug fit into the slot in the headwall.

The rodent screen shall be fabricated from flattened, expanded metal with screen openings of approximately 0.25 square inches. The screen shall be 16 gage metal and be hot dip galvanized after fabrication.

The cost to furnish and place the select backfill, coarse aggregate, geotextile fabric, perforated pipe, non-perforated pipe, headwalls and rodent screens shall be included in the pay item "Abutment Underdrain System."

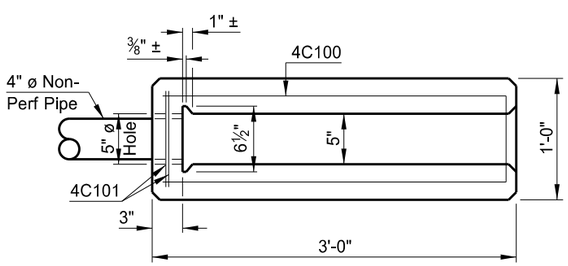

PLAN

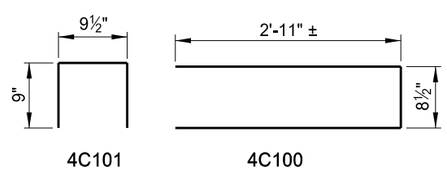

BENT BAR DETAILS

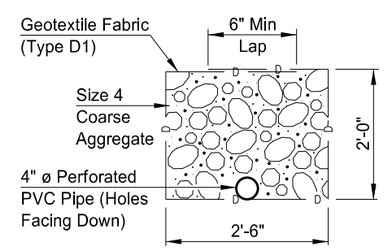

DETAIL "A"

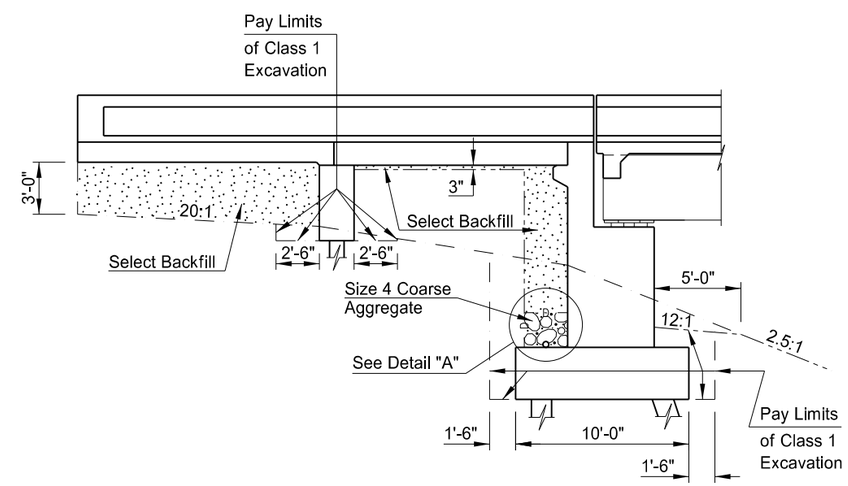

DETAIL AT ABUTMENT

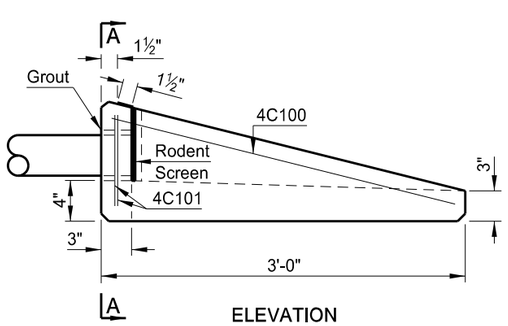

ELEVATION

PRECAST CONCRETE HEADWALL DETAILS

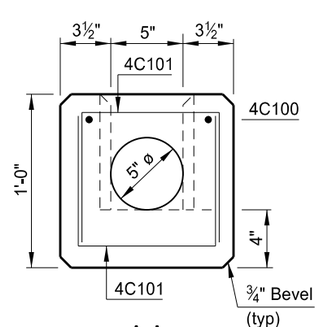

A-A

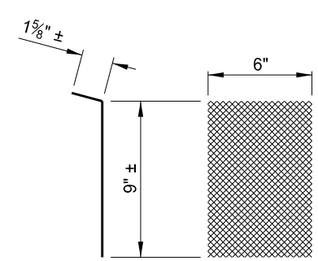

SIDE VIEW FRONT VIEW

RODENT SCREEN DETAILS

This document was originally issued and sealed by Ryan A. Rykowsky, Registration Number PE 6691, on 01/14/14 and the original document is stored at the North Dakota Department of Transportation

US 2 & BISON DRIVE/18TH STREET
WILLISTON

ABUTMENT UNDERDRAIN & EXCAVATION DETAILS

STATE	PROJECT NUMBER	SECTION NO.	SHEET NO.
ND	SOIA-7-002(130)019	170	8

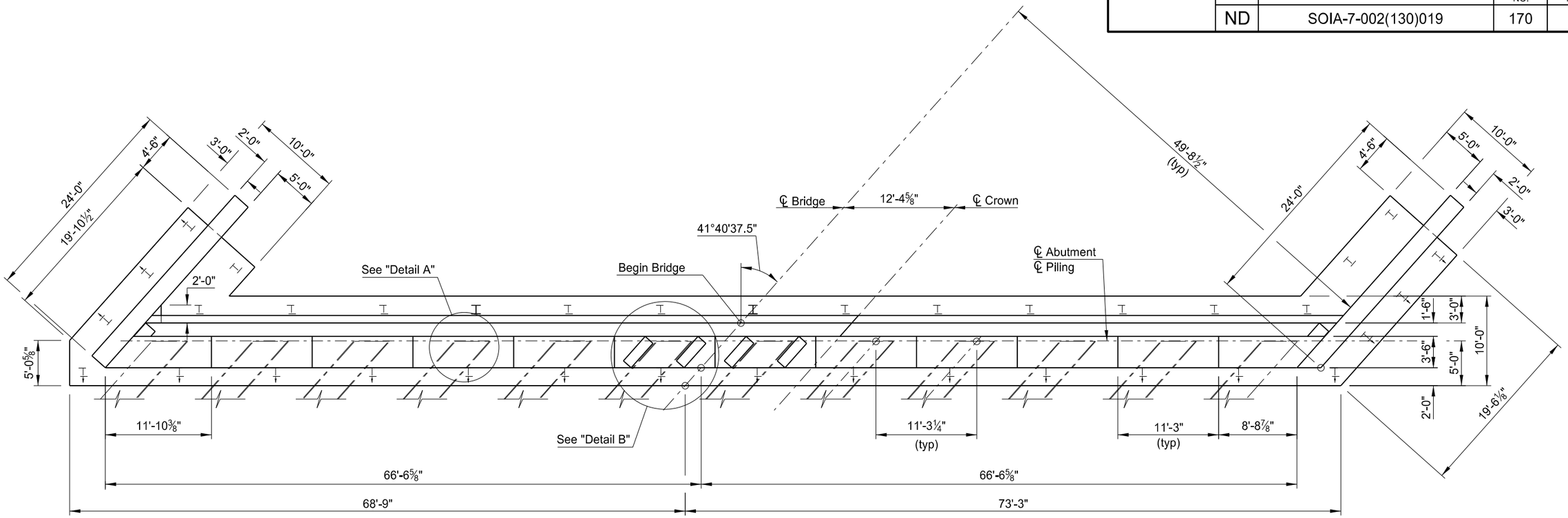

PLAN

NOTE:

See Dwg 2-019.458-9 for Section A-A.

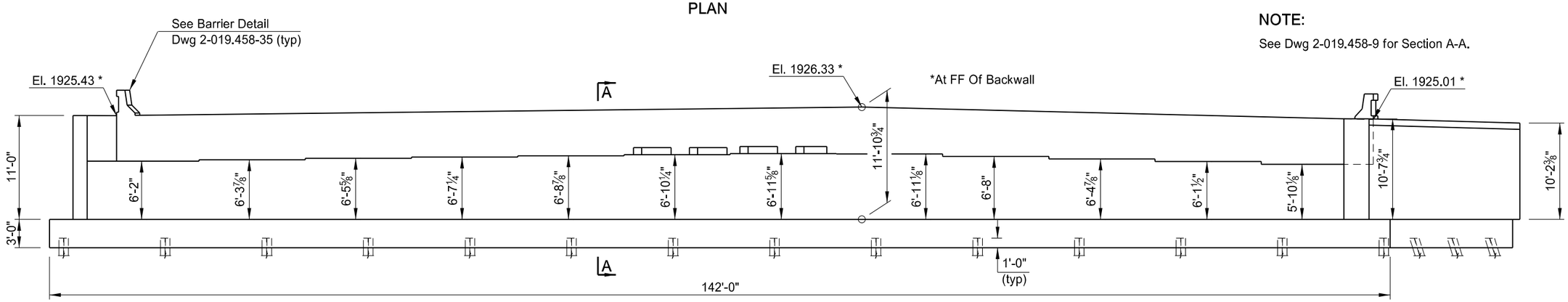

ELEVATION

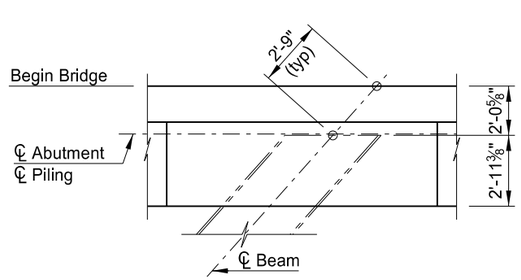

DETAIL A

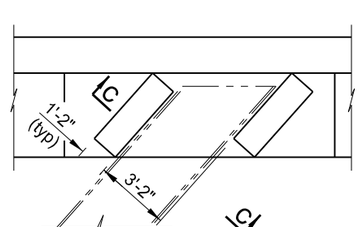

DETAIL B

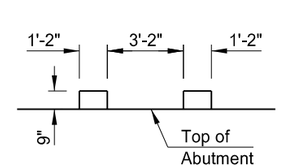

C-C

This document was originally issued and sealed by Ryan A. Rykowsky, Registration Number PE 6691, on 01/14/14 and the original document is stored at the North Dakota Department of Transportation

QUANTITIES

SEE DWG. 2-019.458-12

US 2 & BISON DRIVE/18TH STREET
WILLISTON

(SHOWING DIMENSIONS)

ABUTMENT 1 DETAILS

STATE	PROJECT NUMBER	SECTION NO.	SHEET NO.
ND	SOIA-7-002(130)019	170	9

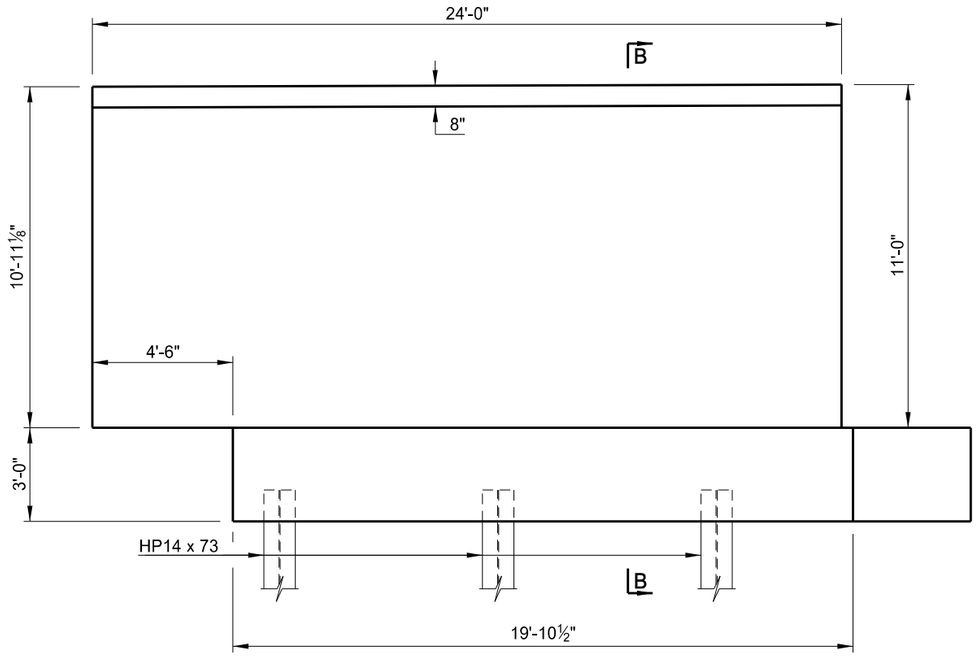

EAST WING ELEVATION

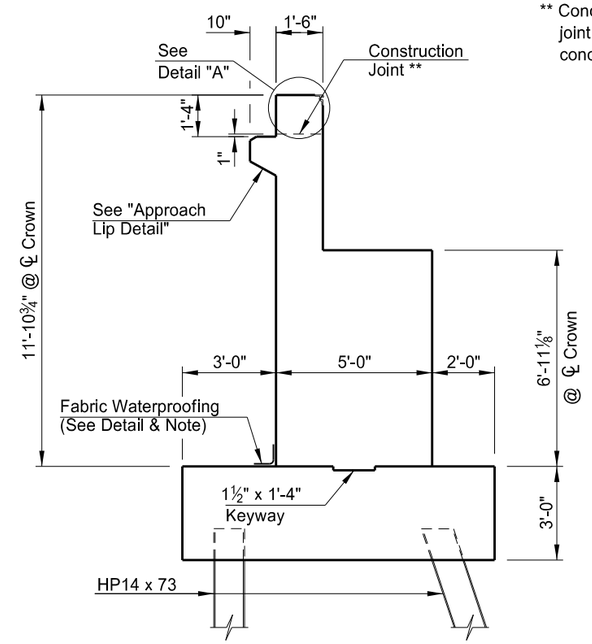

A-A

** Concrete above the construction joint shall be placed after deck concrete is in place.

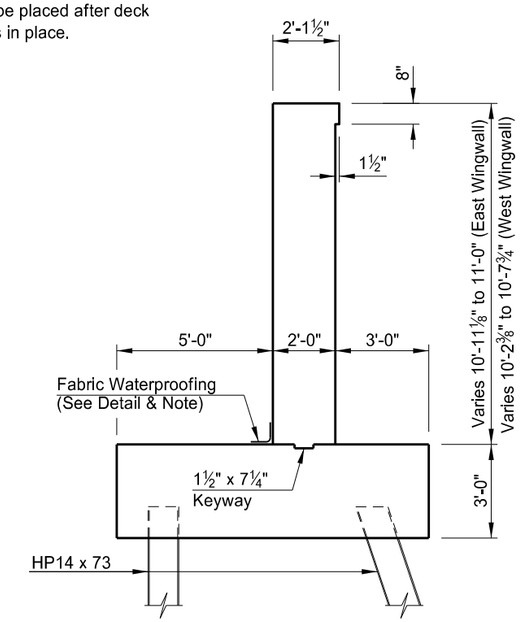

B-B

NOTE:
See Dwg 2-019.458-8 for location of Section A-A & Section B-B.

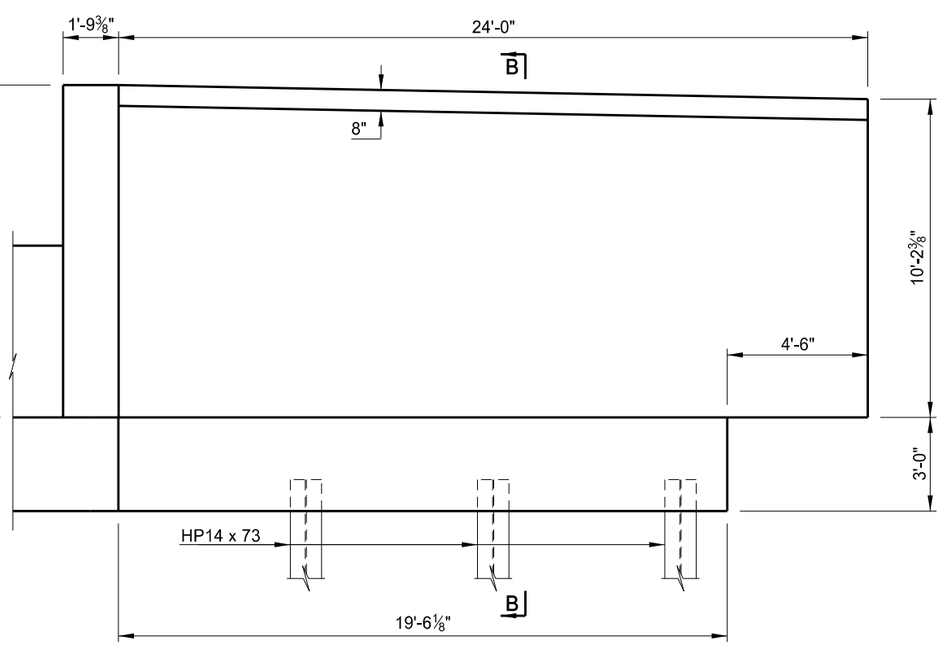

WEST WING ELEVATION

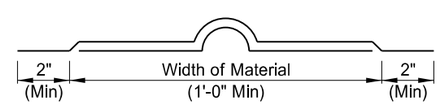

Fabric waterproofing shall be applied in accordance with Section 740 of the NDDOT Specifications. All material and work shall be included in the pay item "Class AE-3 Concrete."

FABRIC WATERPROOFING DETAIL

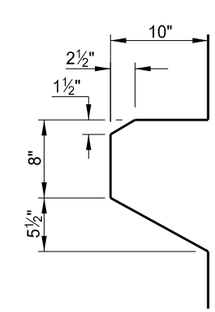

APPROACH LIP DETAIL

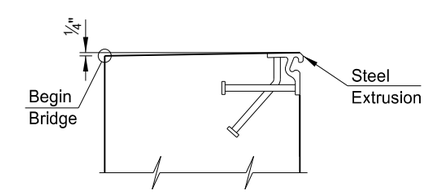

DETAIL "A"

This document was originally issued and sealed by Ryan A. Rykowsky, Registration Number PE 6691, on 01/14/14 and the original document is stored at the North Dakota Department of Transportation

QUANTITIES
SEE DWG. 2-019.458-12

US 2 & BISON DRIVE/18TH STREET
WILLISTON

(SHOWING DIMENSIONS)

ABUTMENT 1 DETAILS

STATE	PROJECT NUMBER	SECTION NO.	SHEET NO.
ND	SOIA-7-002(130)019	170	10

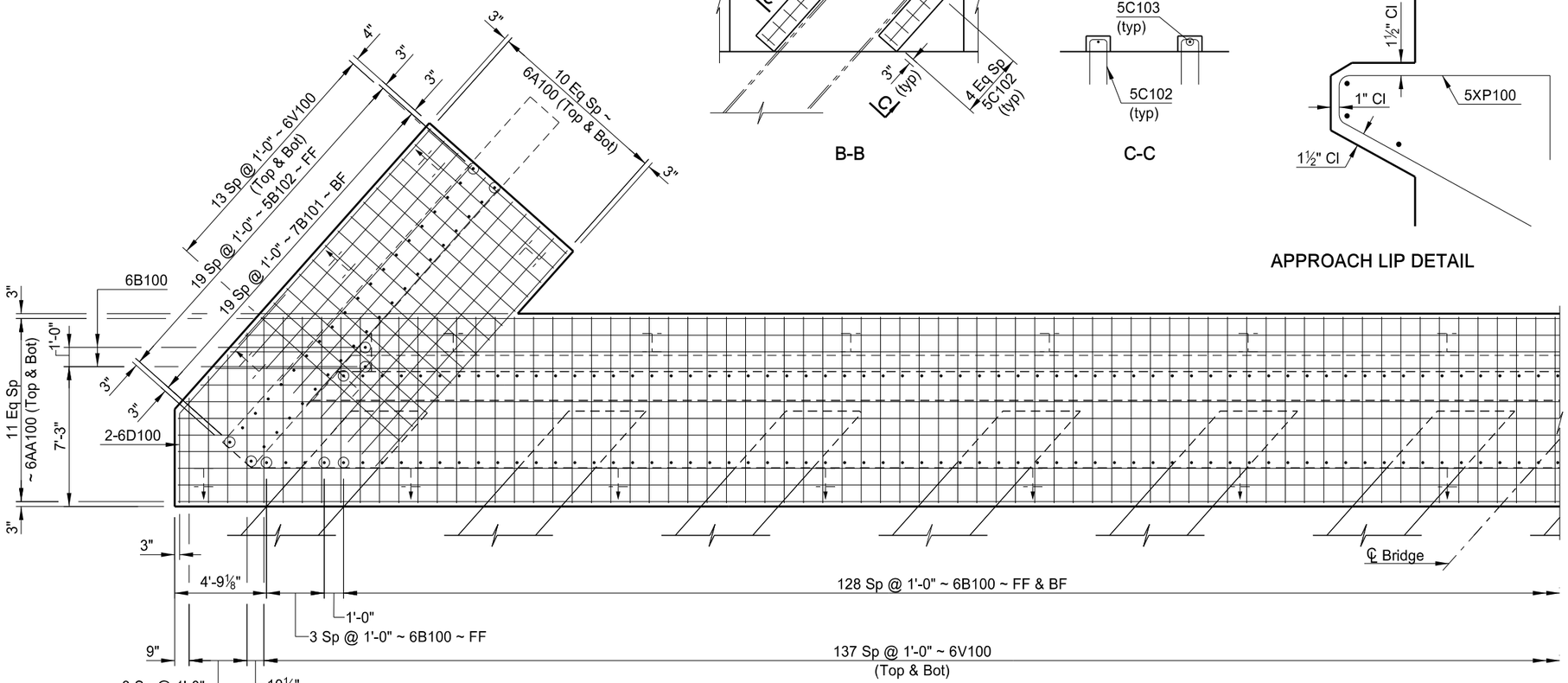

PLAN

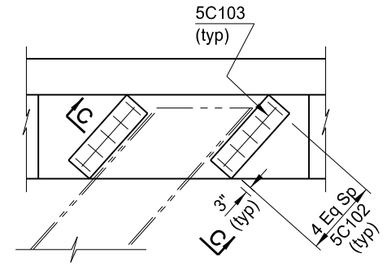

B-B

C-C

APPROACH LIP DETAIL

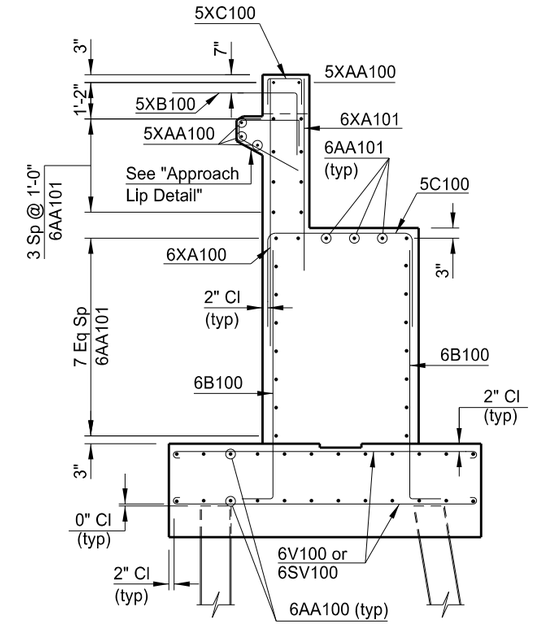

A-A

NOMENCLATURE:

FF = Front Face
BF = Back Face

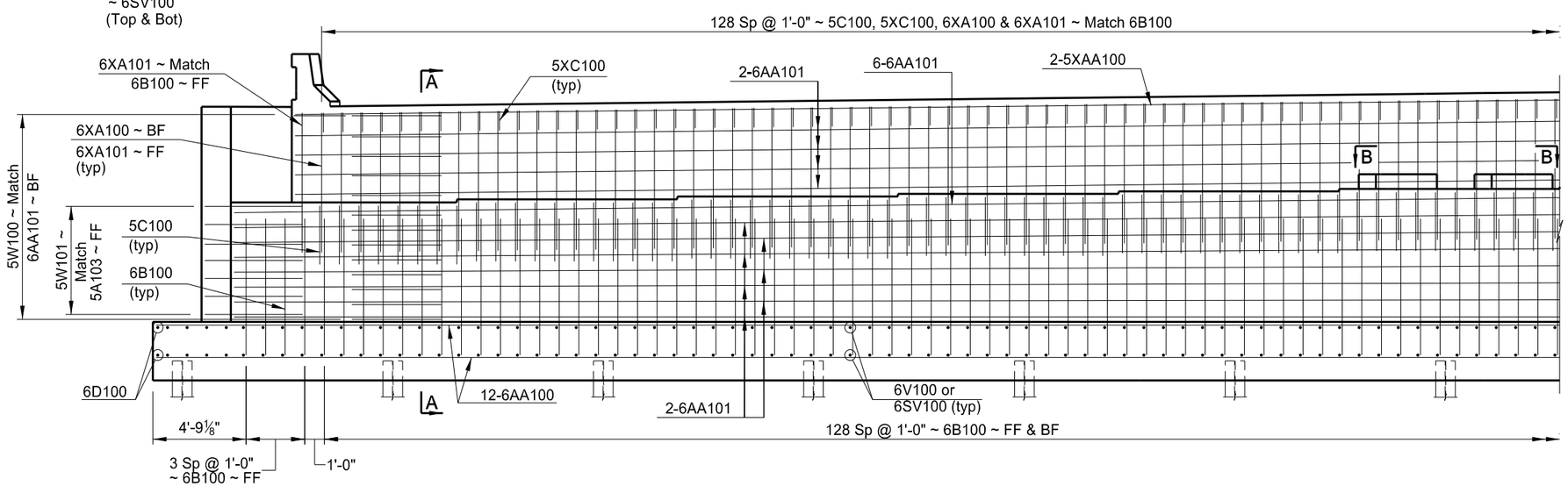

ELEVATION

This document was originally issued and sealed by Ryan A. Rykowsky, Registration Number PE 6691, on 01/14/14 and the original document is stored at the North Dakota Department of Transportation

QUANTITIES

SEE DWG. 2-019.458-12

US 2 & BISON DRIVE/18TH STREET
WILLISTON

(SHOWING REINFORCING)

ABUTMENT 1 DETAILS

STATE	PROJECT NUMBER	SECTION NO.	SHEET NO.
ND	SOIA-7-002(130)019	170	11

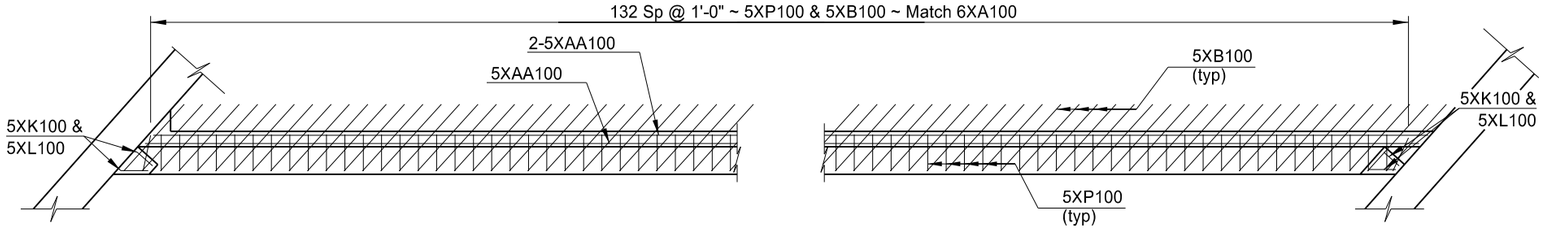

PLAN SHOWING APPROACH LIP

NOTE:
See Dwg 2-019.458-10 for Section A-A & B-B

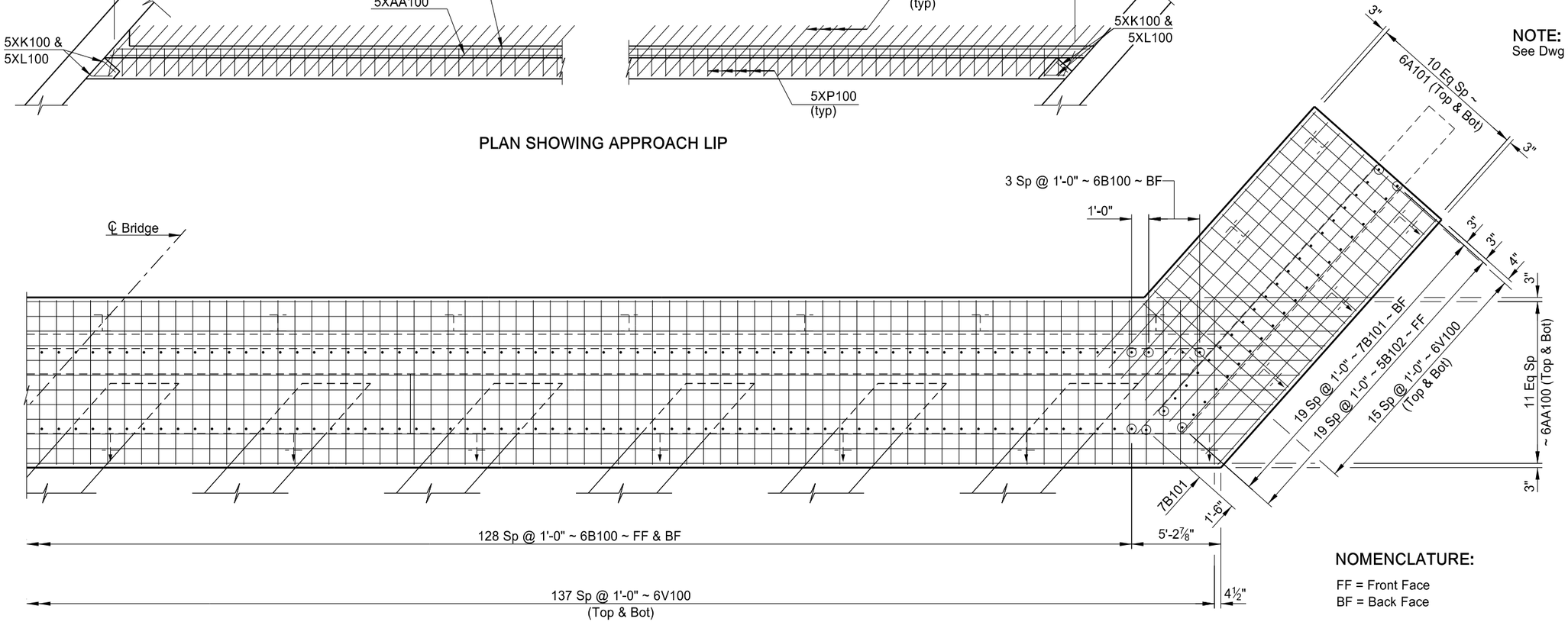

PLAN

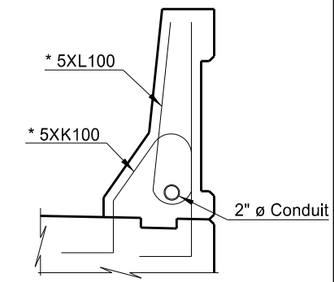

* Barrier reinforcing shall have a 1½" clearance from the front face.

END VIEW

BARRIER SECTION

NOMENCLATURE:

FF = Front Face
BF = Back Face

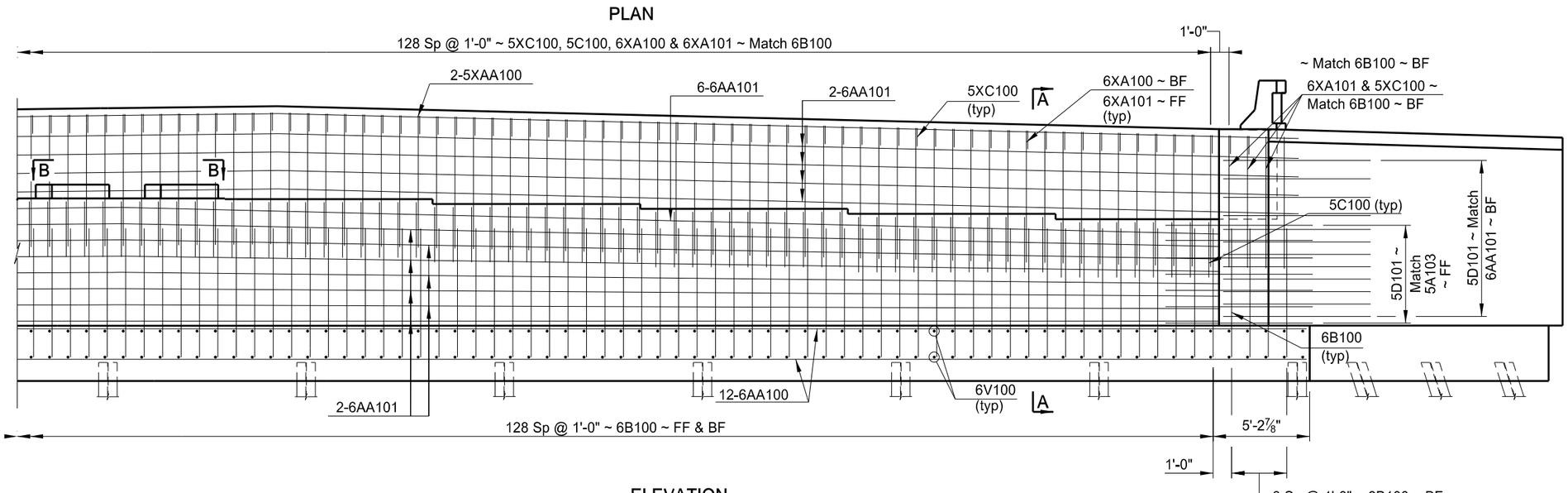

ELEVATION

This document was originally issued and sealed by Ryan A. Rykowsky, Registration Number PE 6691, on 01/14/14 and the original document is stored at the North Dakota Department of Transportation

QUANTITIES

SEE DWG. 2-019.458-12

US 2 & BISON DRIVE/18TH STREET
WILLISTON

(SHOWING REINFORCING)

ABUTMENT 1 DETAILS

STATE	PROJECT NUMBER	SECTION NO.	SHEET NO.
ND	SOIA-7-002(130)019	170	12

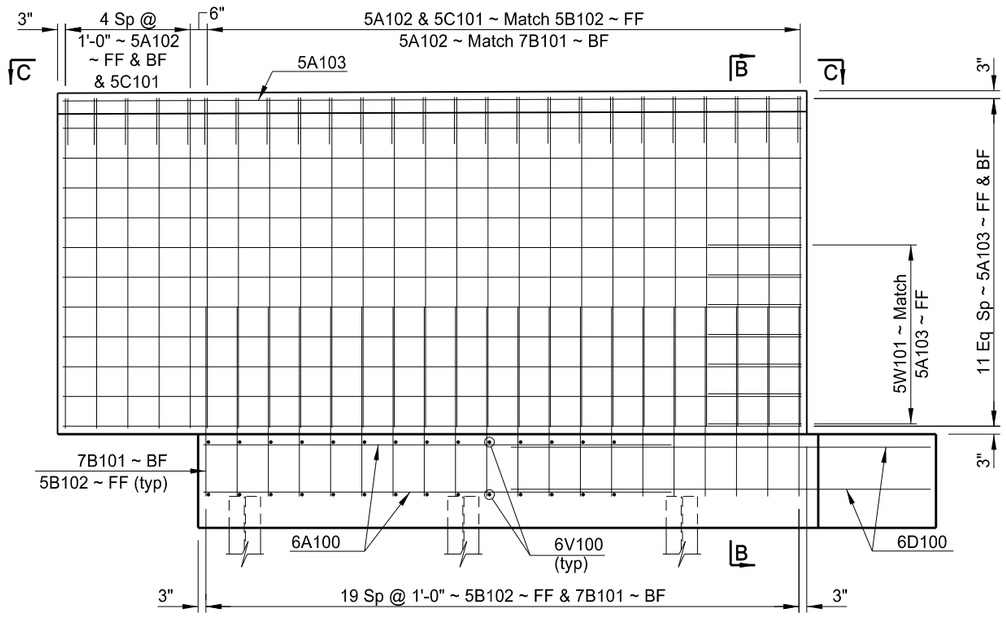

EAST WING REINFORCEMENT ELEVATION

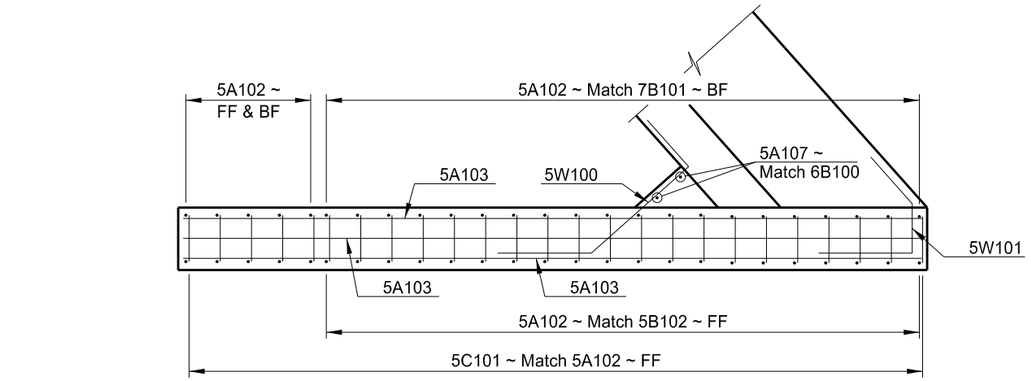

C-C

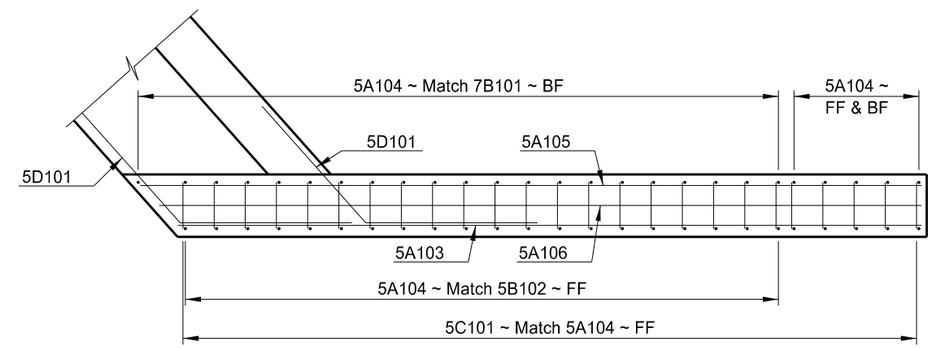

D-D

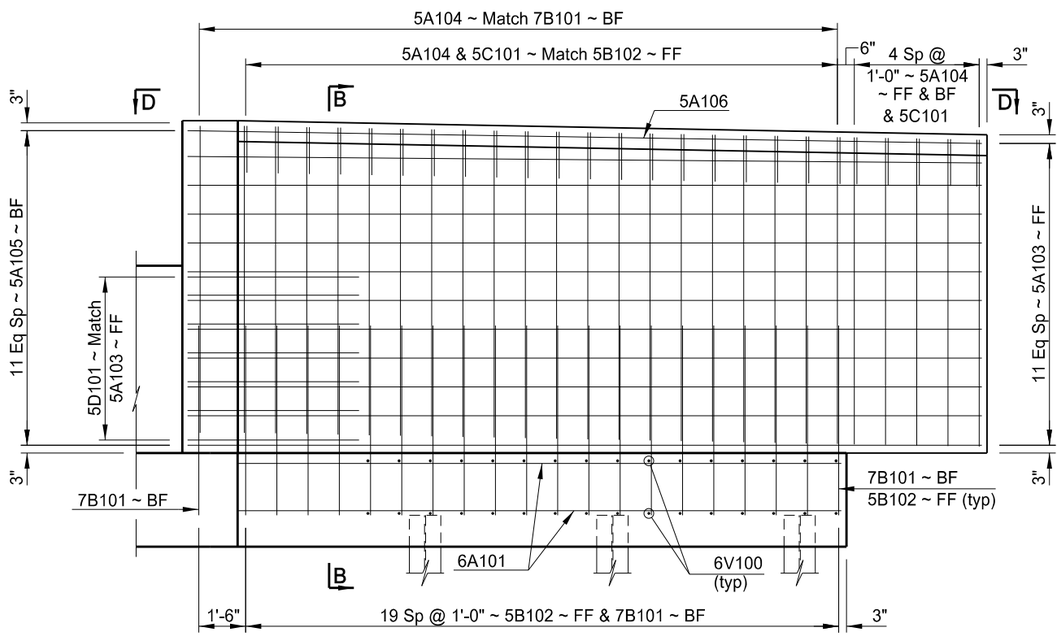

WEST WING REINFORCEMENT ELEVATION

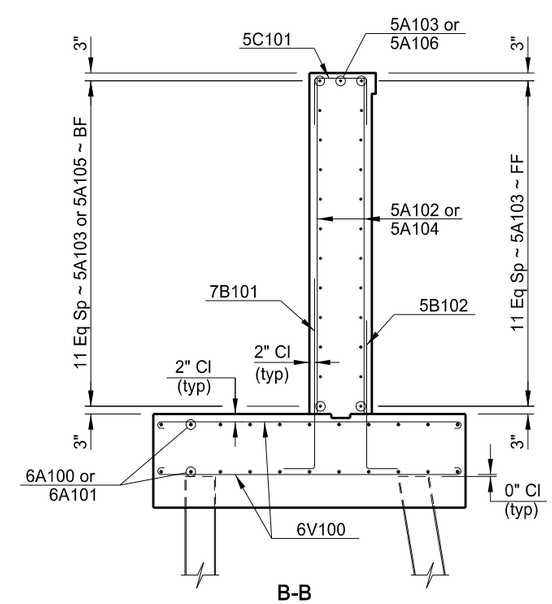

B-B

NOMENCLATURE:

FF = Front Face
BF = Back Face

This document was originally issued and sealed by Ryan A. Rykowsky, Registration Number PE 6691, on 01/14/14 and the original document is stored at the North Dakota Department of Transportation

QUANTITIES	
CLASS AE-3 CONCRETE	423.2 CY
REINFORCING STEEL	27,182 LB
REINFORCING STEEL (EPOXY)	5,974 LB

US 2 & BISON DRIVE/18TH STREET
WILLISTON

(SHOWING REINFORCING)

ABUTMENT 1 DETAILS

STATE	PROJECT NUMBER	SECTION NO.	SHEET NO.
ND	SOIA-7-002(130)019	170	13

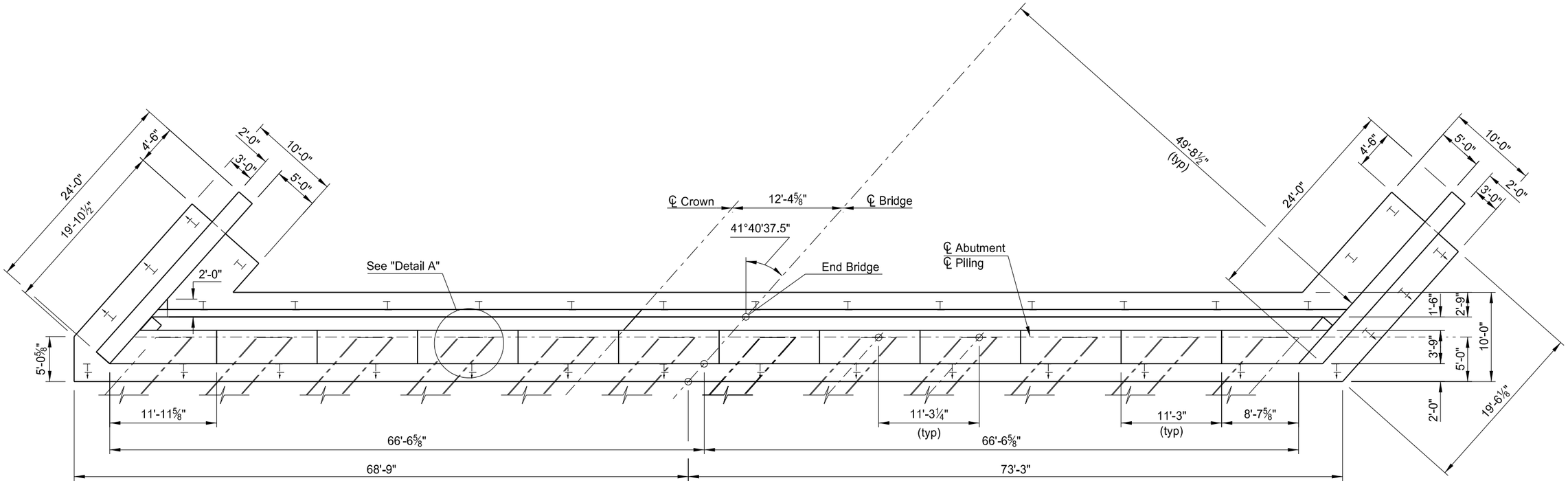

PLAN

NOTE:

See Dwg 2-019.458-14 for Section A-A.

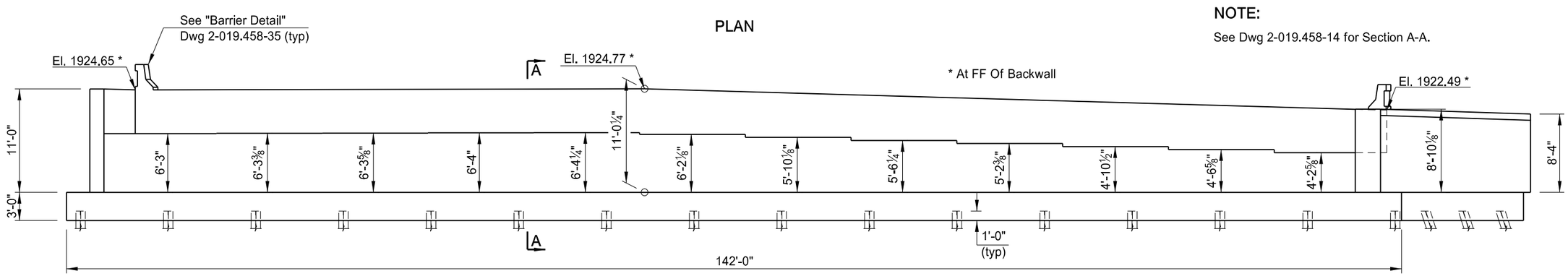

ELEVATION

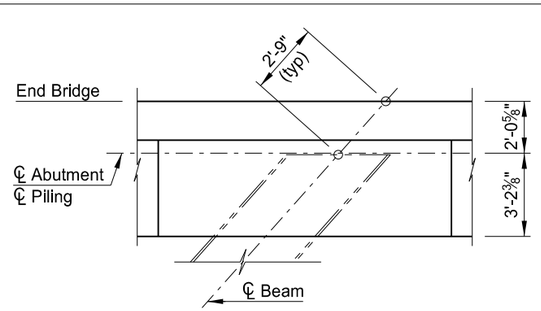

DETAIL A

This document was originally issued and sealed by Ryan A. Rykowsky, Registration Number PE 6691, on 01/14/14 and the original document is stored at the North Dakota Department of Transportation

QUANTITIES
SEE DWG. 2-019.458-17

US 2 & BISON DRIVE/18TH STREET
WILLISTON

(SHOWING DIMENSIONS)

ABUTMENT 4 DETAILS

STATE	PROJECT NUMBER	SECTION NO.	SHEET NO.
ND	SOIA-7-002(130)019	170	14

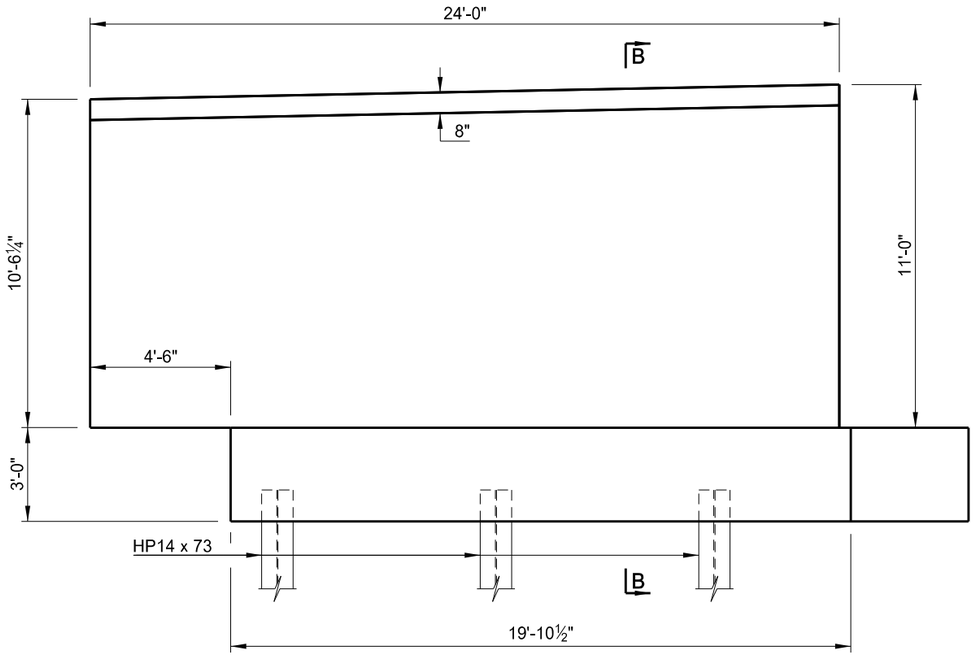

WEST WING ELEVATION

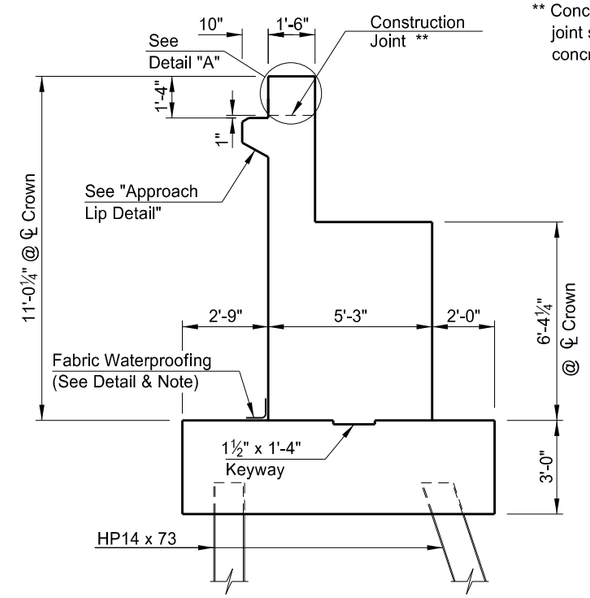

A-A

** Concrete above the construction joint shall be placed after deck concrete is in place.

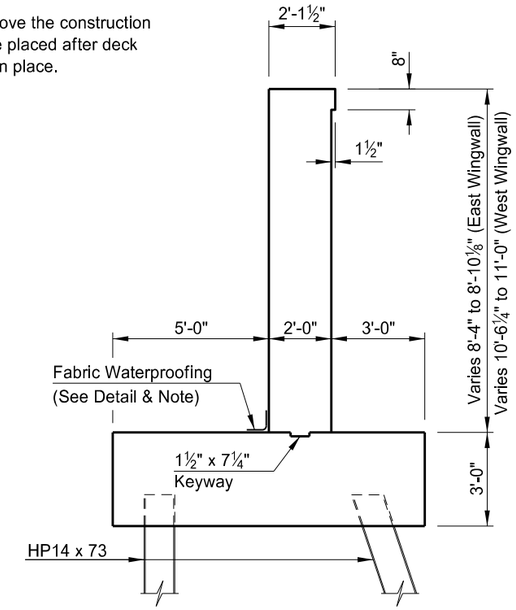

B-B

NOTE:
See Dwg 2-019.458-13 for location of Section A-A.

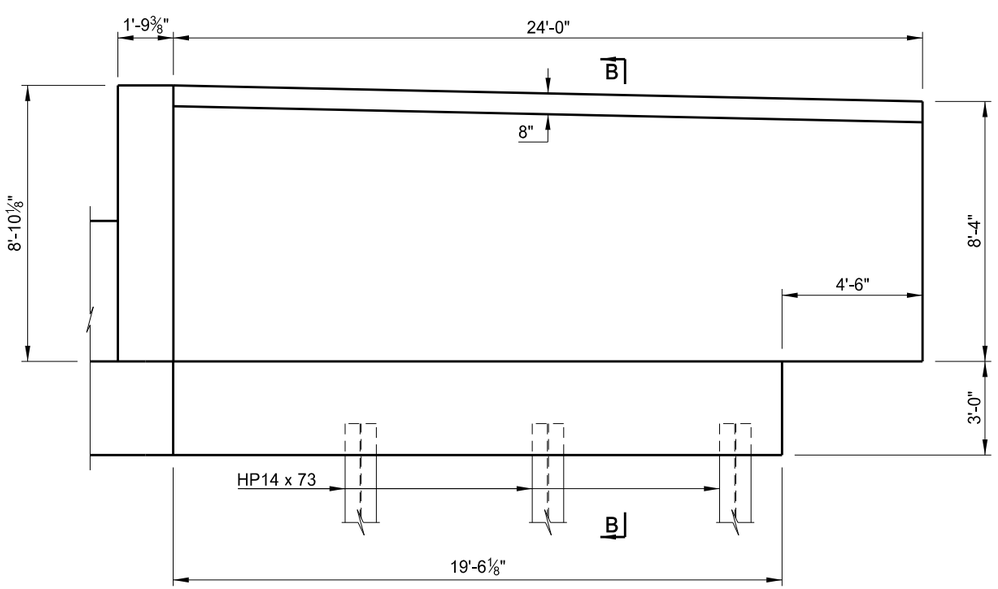

EAST WING ELEVATION

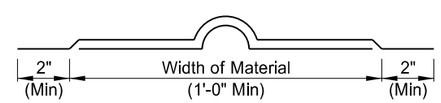

Fabric waterproofing shall be applied in accordance with Section 740 of the NDDOT Specifications. All material and work shall be included in the pay item "Class AE-3 Concrete."

FABRIC WATERPROOFING DETAIL

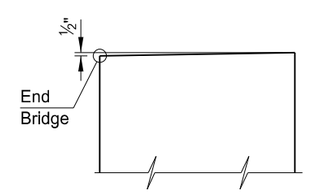

DETAIL "A"

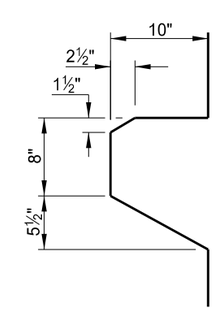

APPROACH LIP DETAIL

This document was originally issued and sealed by Ryan A. Rykowsky, Registration Number PE 6691, on 01/14/14 and the original document is stored at the North Dakota Department of Transportation

QUANTITIES
SEE DWG. 2-019.458-17

US 2 & BISON DRIVE/18TH STREET
WILLISTON

(SHOWING DIMENSIONS)

ABUTMENT 4 DETAILS

STATE	PROJECT NUMBER	SECTION NO.	SHEET NO.
ND	SOIA-7-002(130)019	170	15

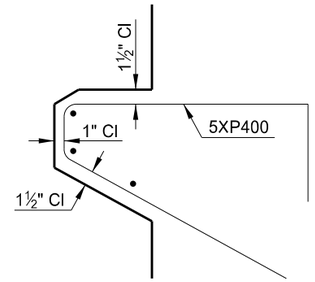

APPROACH LIP DETAIL

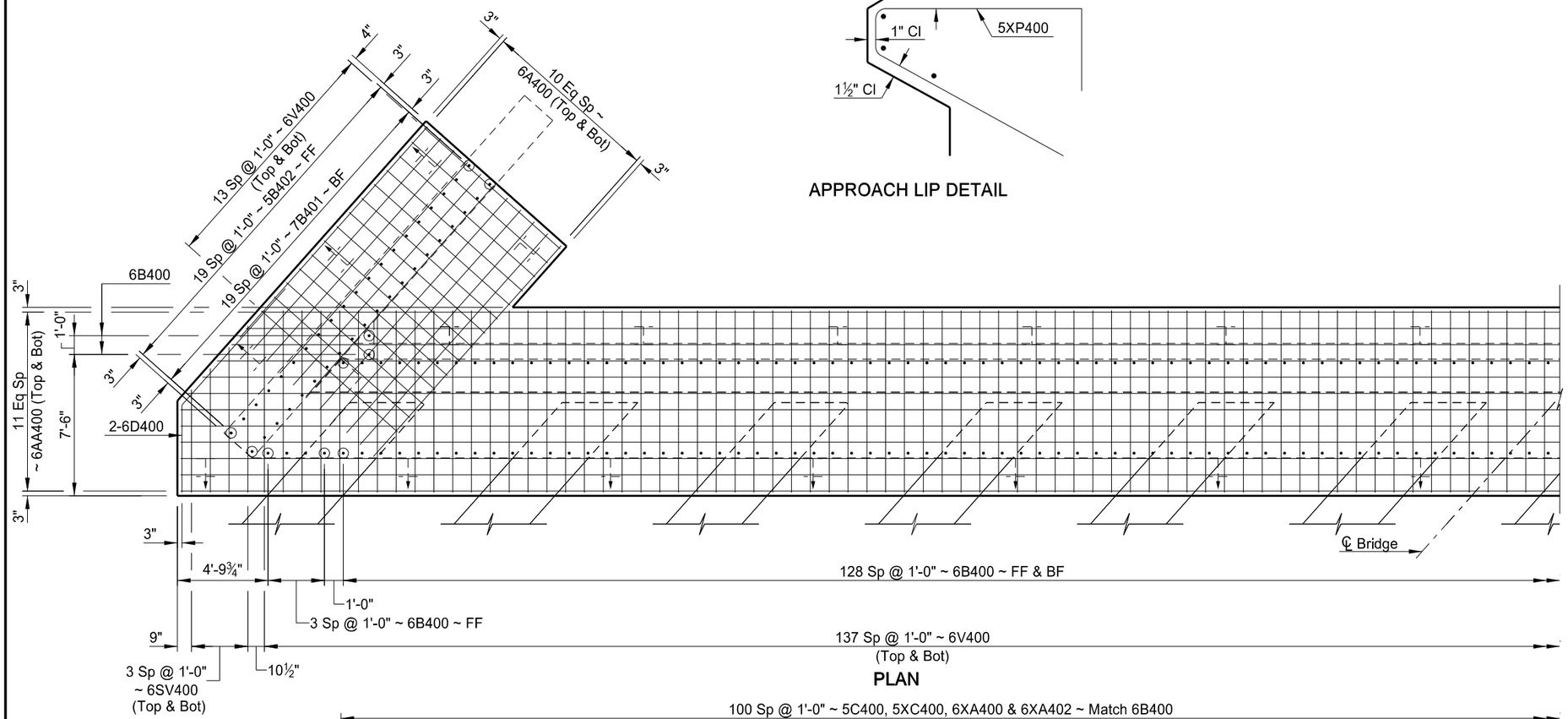

PLAN

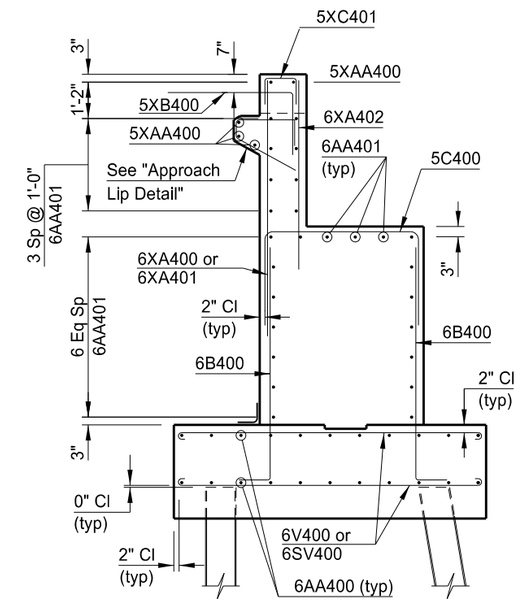

A-A

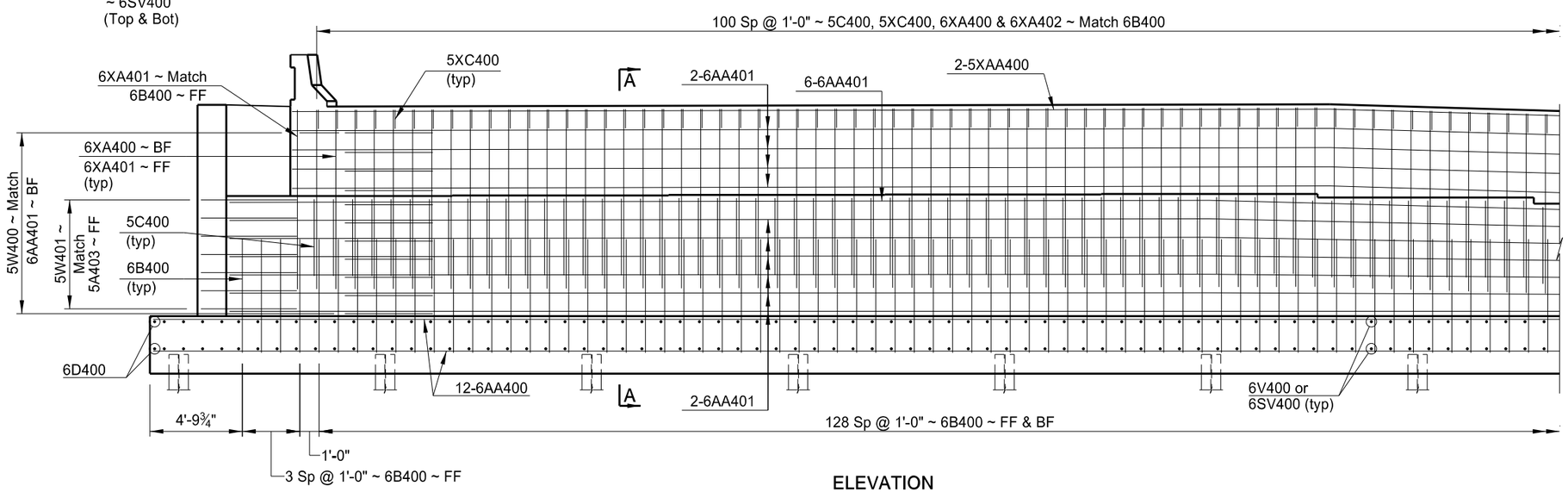

ELEVATION

NOMENCLATURE:

FF = Front Face
BF = Back Face

This document was originally issued and sealed by Ryan A. Rykowsky, Registration Number PE 6691, on 01/14/14 and the original document is stored at the North Dakota Department of Transportation

QUANTITIES
SEE DWG. 2-019.458-17

US 2 & BISON DRIVE/18TH STREET
WILLISTON

(SHOWING REINFORCING)

ABUTMENT 4 DETAILS

STATE	PROJECT NUMBER	SECTION NO.	SHEET NO.
ND	SOIA-7-002(130)019	170	16

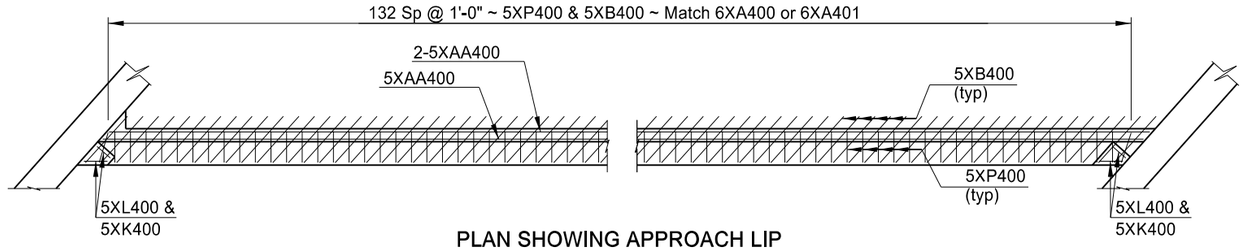

PLAN SHOWING APPROACH LIP

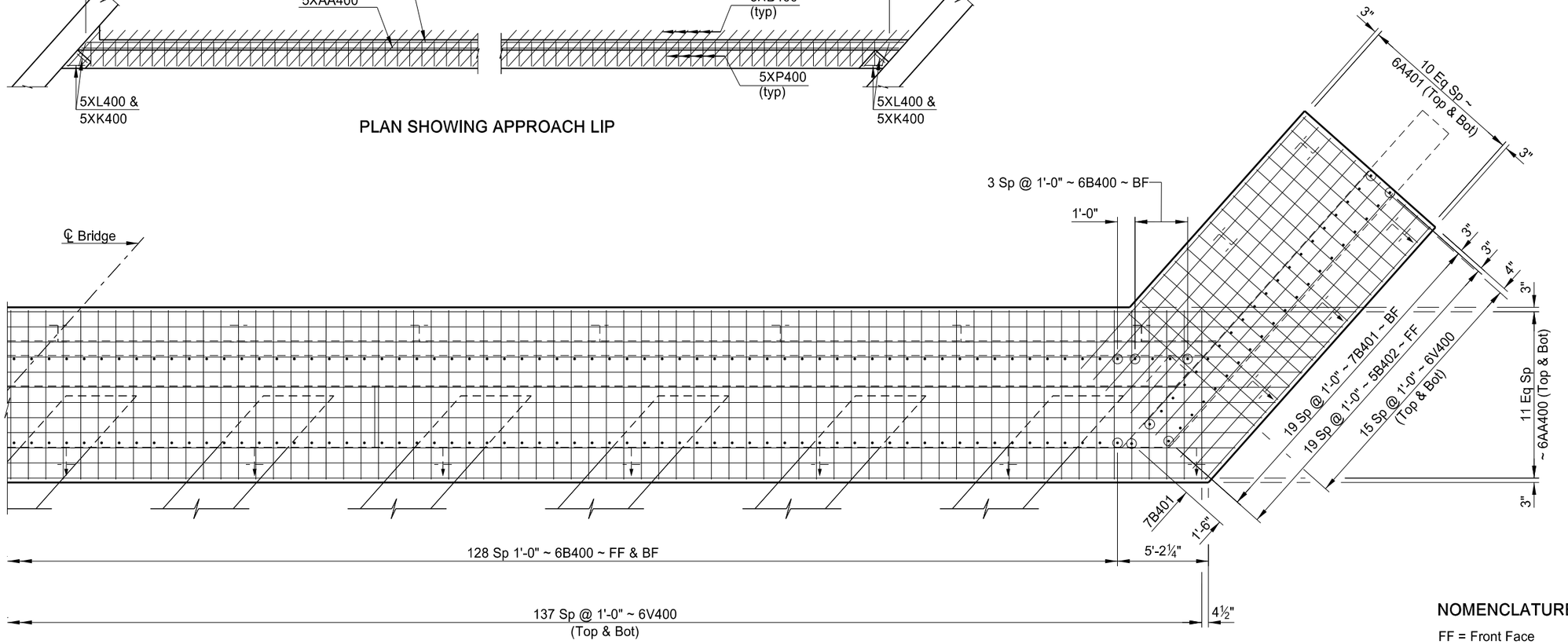

PLAN

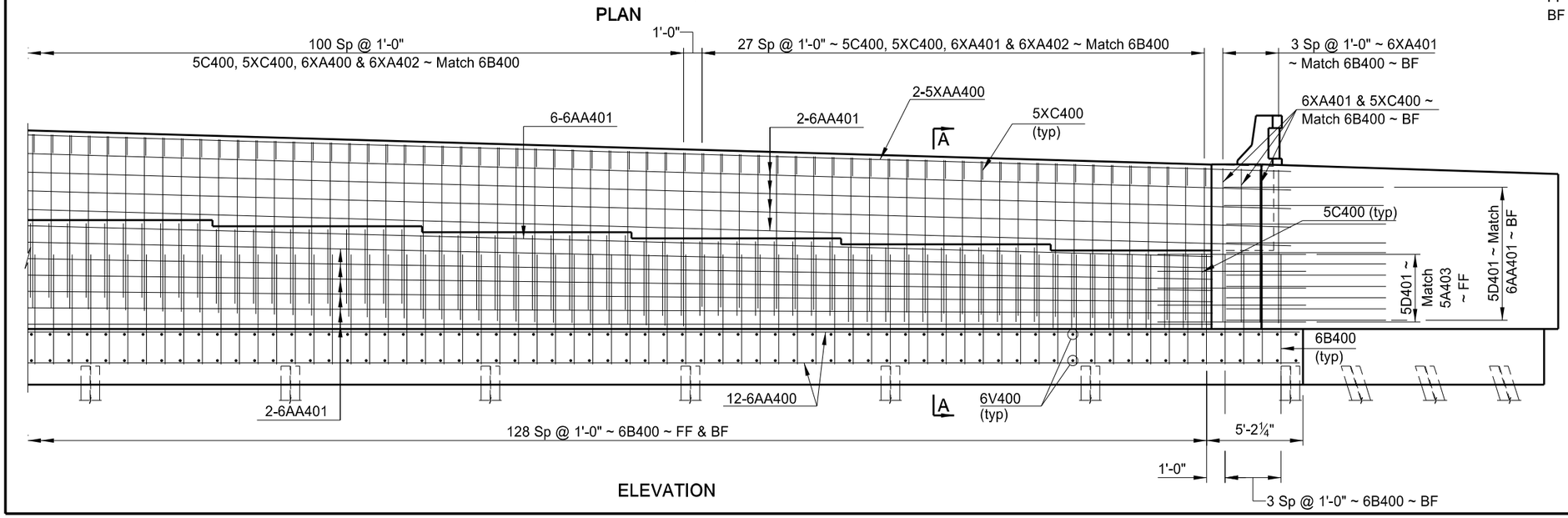

ELEVATION

NOTE:
See Dwg 2-019.458-15 for Section A-A.

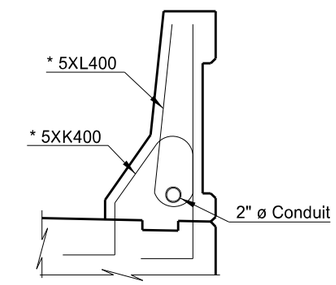

* Barrier reinforcing shall have a 1½" clearance from the front face.

END VIEW

BARRIER SECTION

NOMENCLATURE:

FF = Front Face
BF = Back Face

This document was originally issued and sealed by Ryan A. Rykowsky, Registration Number PE 6691, on 01/14/14 and the original document is stored at the North Dakota Department of Transportation

QUANTITIES

SEE DWG. 2-019.458-17

US 2 & BISON DRIVE/18TH STREET
WILLISTON

(SHOWING REINFORCING)

ABUTMENT 4 DETAILS

STATE	PROJECT NUMBER	SECTION NO.	SHEET NO.
ND	SOIA-7-002(130)019	170	17

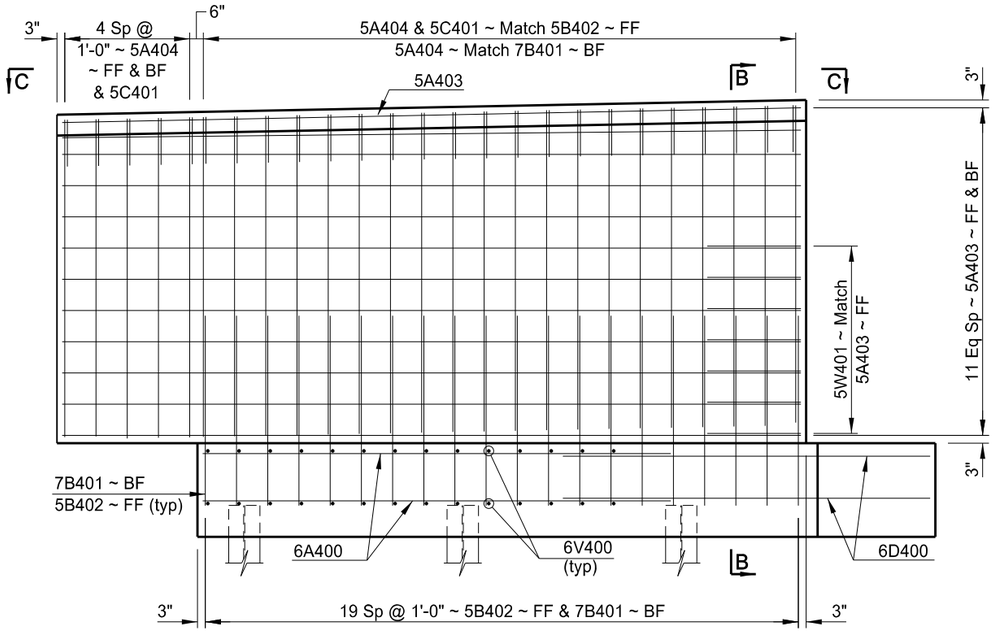

WEST WING REINFORCEMENT ELEVATION

NOMENCLATURE:
FF = Front Face
BF = Back Face

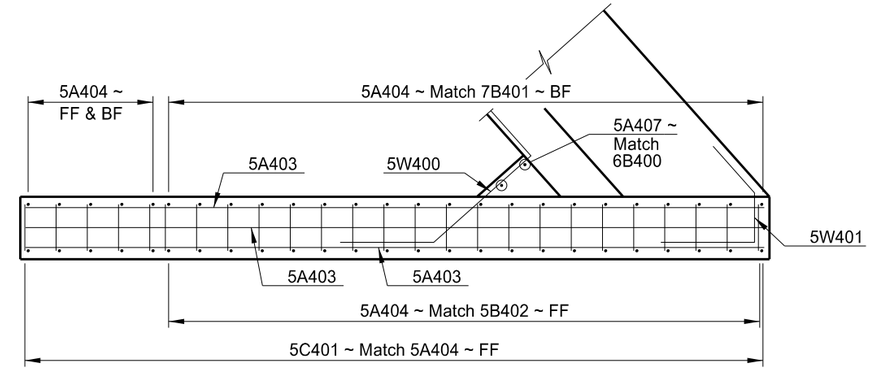

C-C

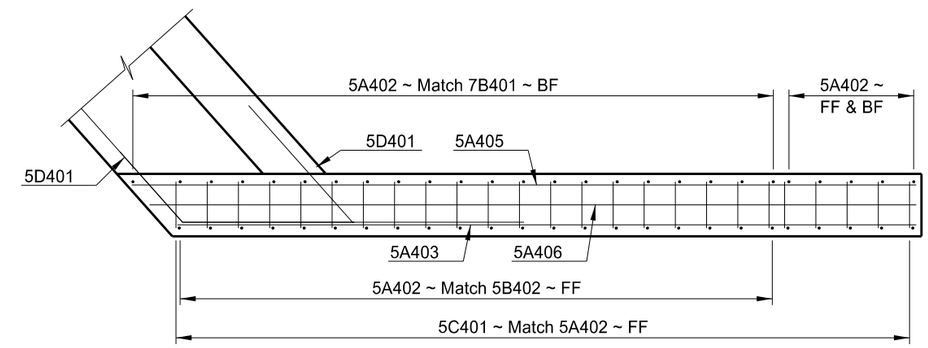

D-D

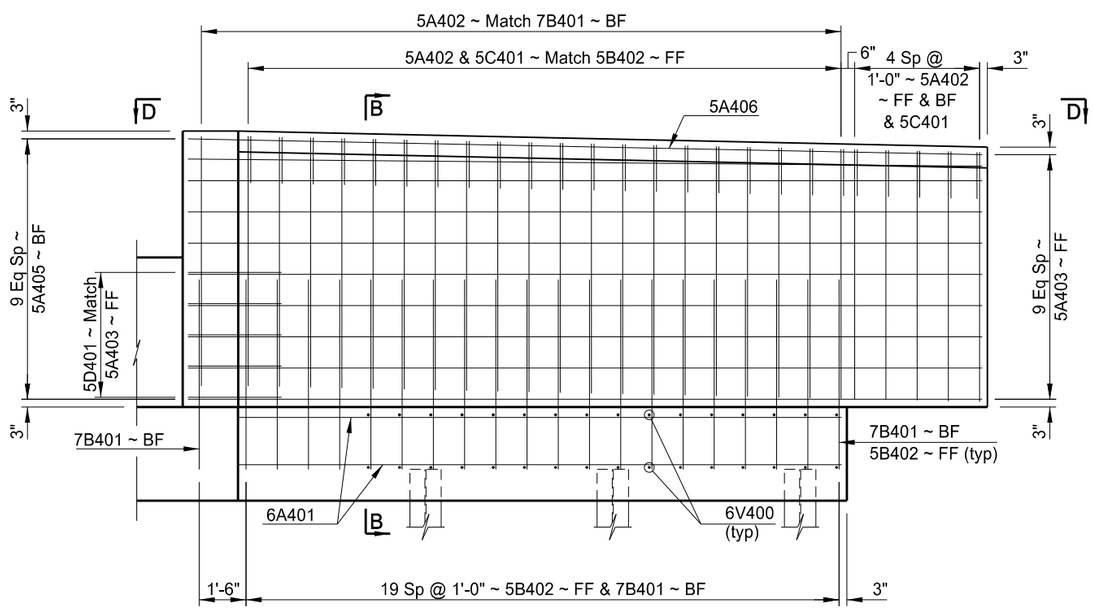

EAST WING REINFORCEMENT ELEVATION

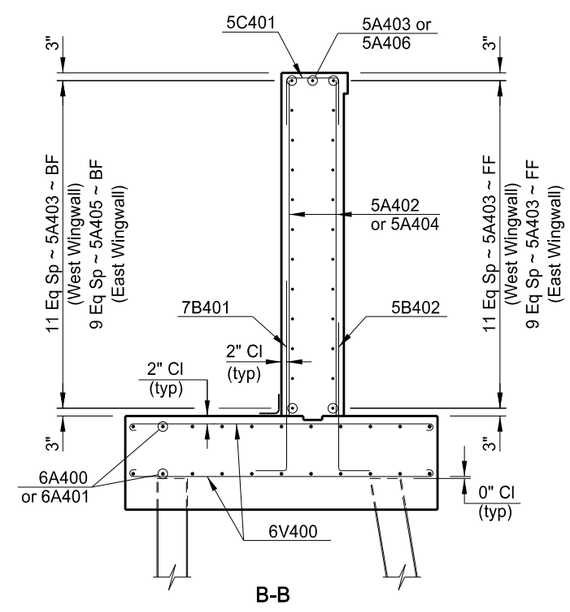

B-B

This document was originally issued and sealed by Ryan A. Rykowsky, Registration Number PE 6691, on 01/14/14 and the original document is stored at the North Dakota Department of Transportation

QUANTITIES	
CLASS AE-3 CONCRETE	403.8 CY
REINFORCING STEEL	25,955 LB
REINFORCING STEEL (EPOXY)	5839 LB

US 2 & BISON DRIVE/18TH STREET
WILLISTON

(SHOWING REINFORCING)

ABUTMENT 4 DETAILS

STATE	PROJECT NUMBER	SECTION NO.	SHEET NO.
ND	SOIA-7-002(130)019	170	18

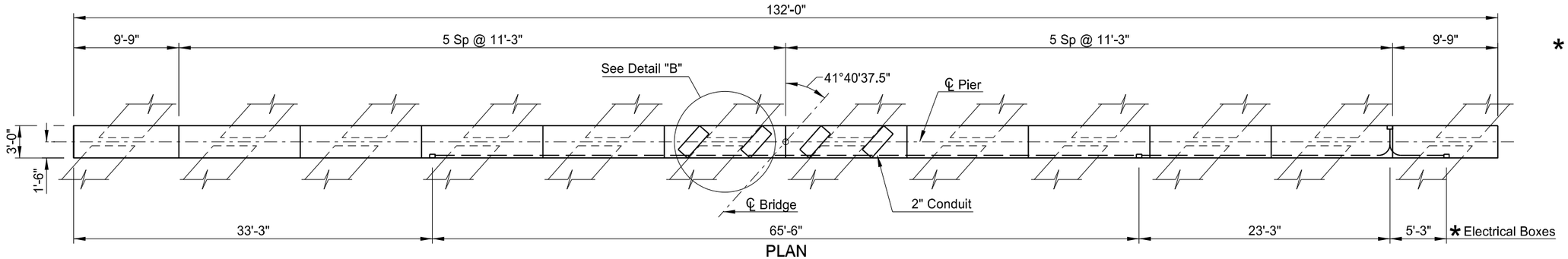

PLAN

* The electrical boxes shall be 6" x 6" x 4" NEMA Type 1 enclosures made from 16 gage galvanized steel. The cover shall be screwed to the box. Pull wire shall be installed in the conduit boxes.

All material and labor to install the conduit,electrical boxes and pull wire shall be included in the bid item "Class AE-3 Concrete."

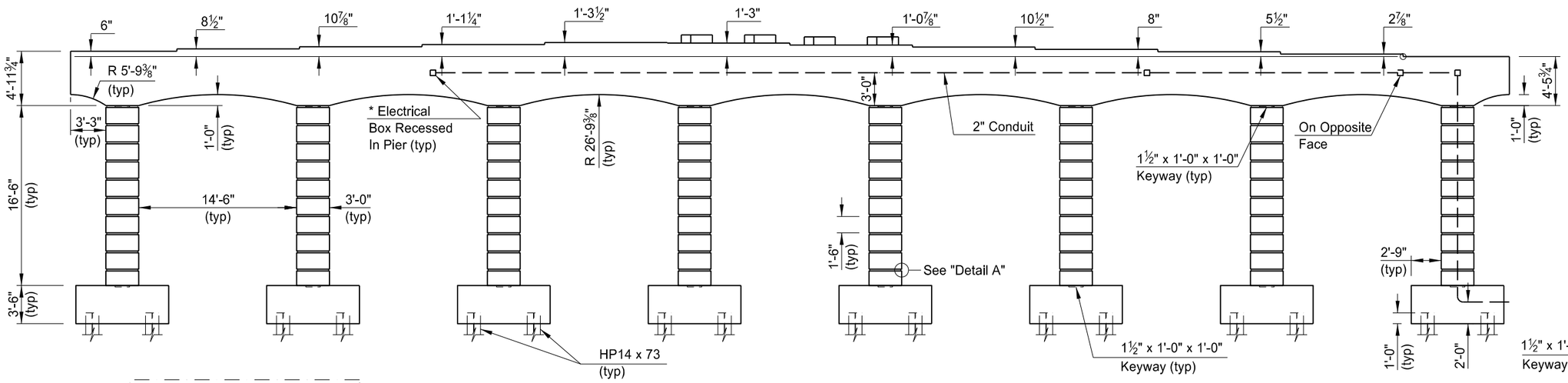

ELEVATION

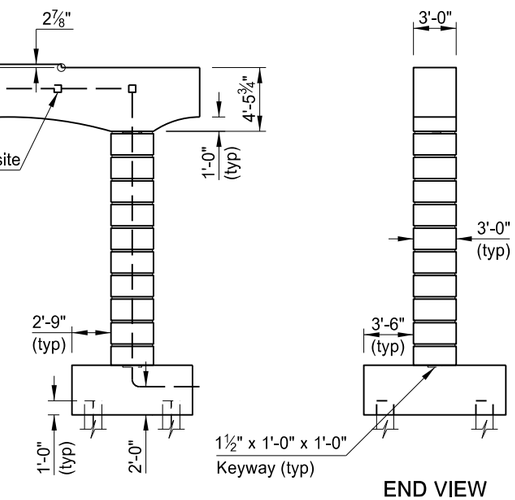

END VIEW

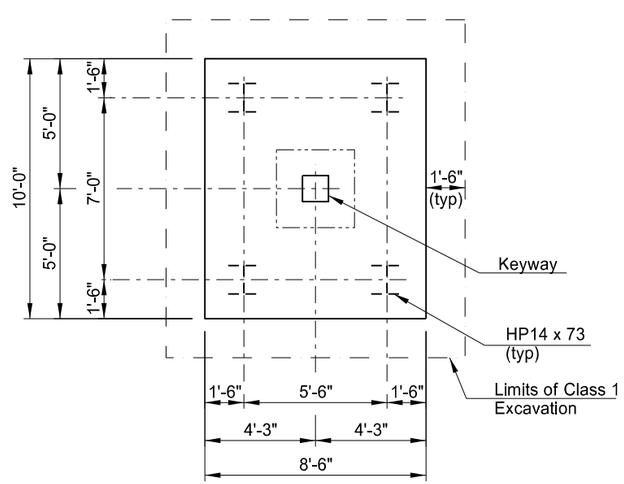

TYP FOOTING PLAN

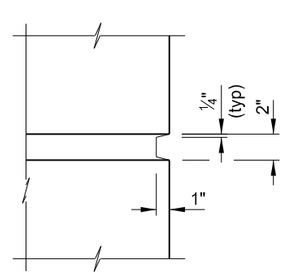

DETAIL A

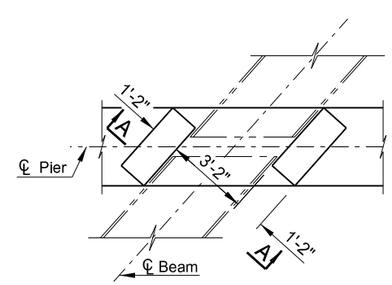

DETAIL B

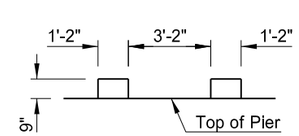

A-A

This document was originally issued and sealed by Ryan A. Rykowsky, Registration Number PE 6691, on 01/14/14 and the original document is stored at the North Dakota Department of Transportation

QUANTITIES
SEE DWG 2-019.458-20

US 2 & BISON DRIVE/18TH STREET
WILLISTON

(SHOWING DIMENSIONS)

PIER 2 DETAILS

STATE	PROJECT NUMBER	SECTION NO.	SHEET NO.
ND	SOIA-7-002(130)019	170	19

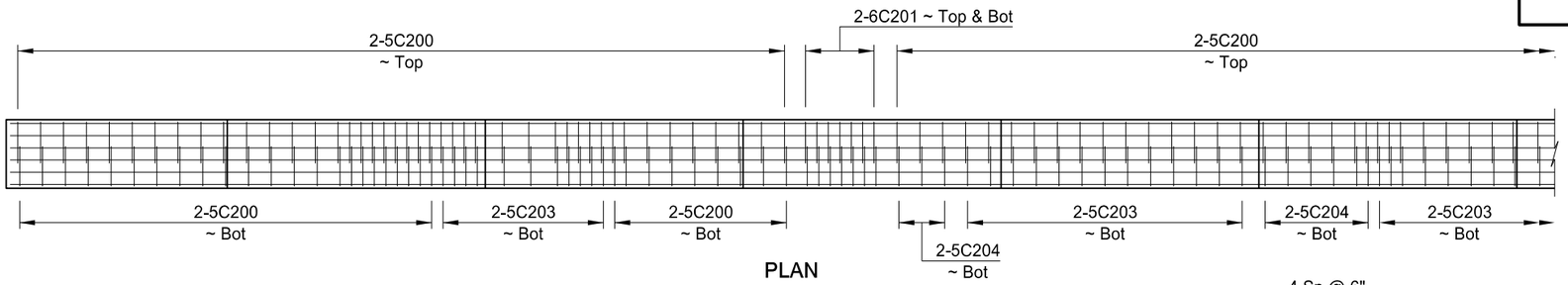

PLAN

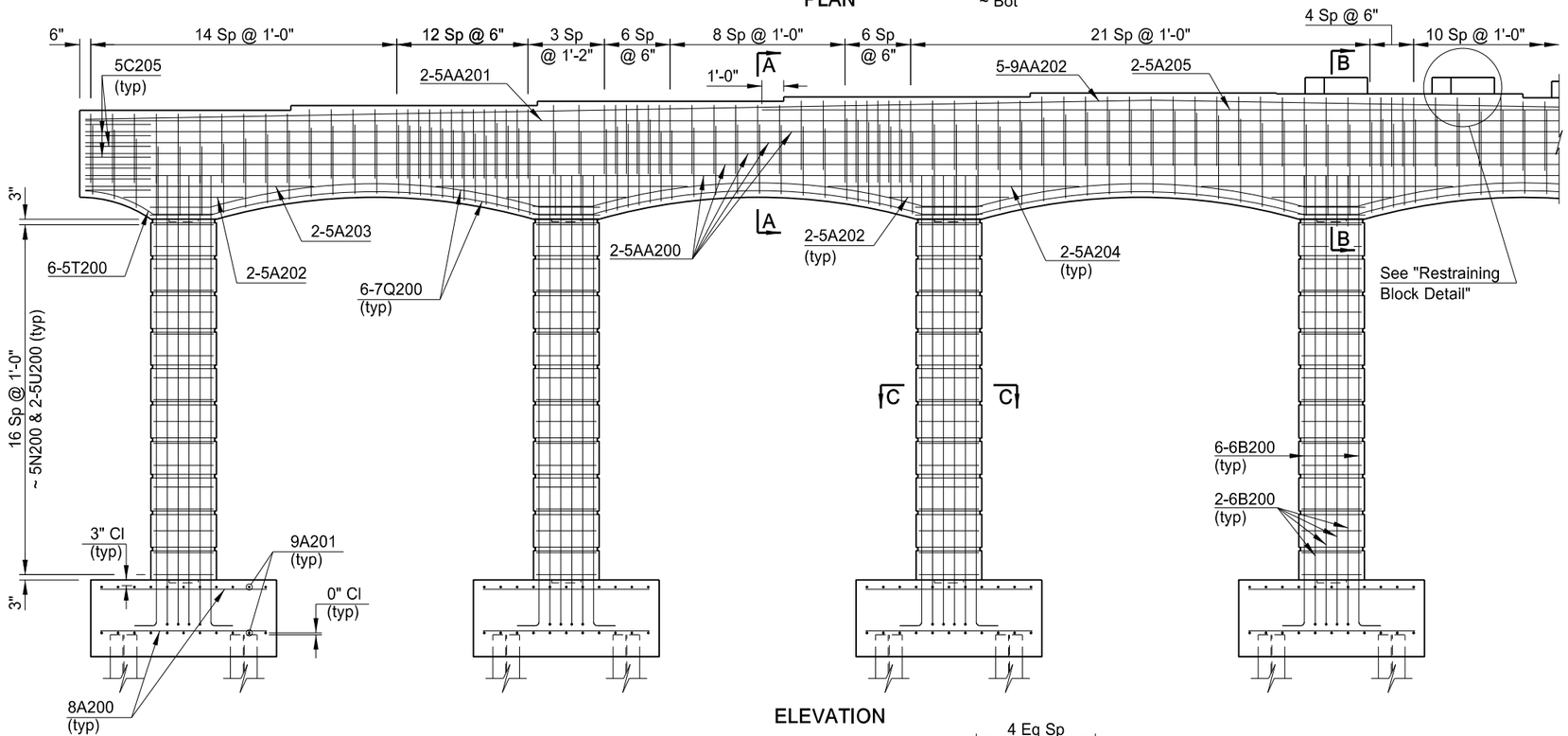

ELEVATION

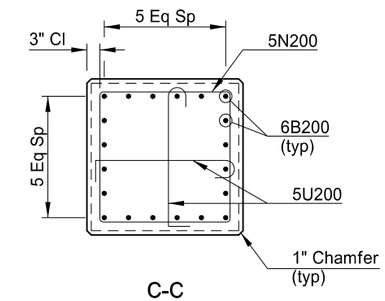

C-C

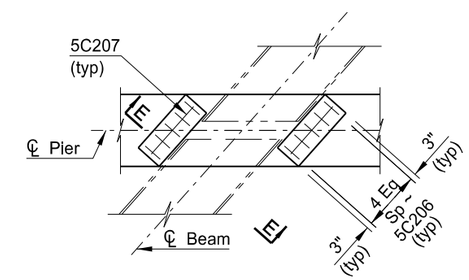

(PLAN VIEW)

RESTRAINING BLOCK DETAIL

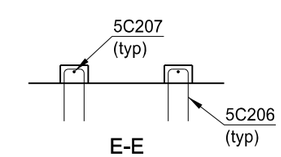

E-E

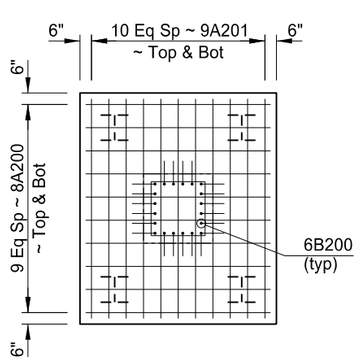

FOOTING PLAN

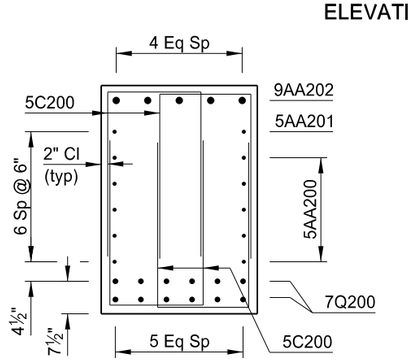

(SECTION AT CENTER OF ARCH)

A-A

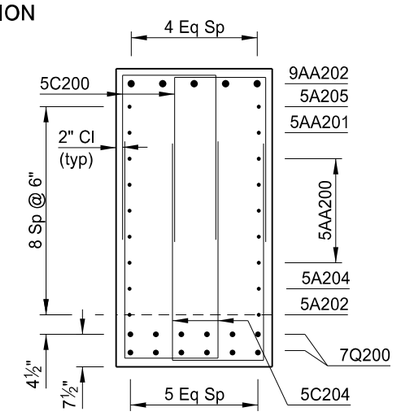

(SECTION AT CENTER OF COLUMN)

B-B

This document was originally issued and sealed by Ryan A. Rykowsky, Registration Number PE 6691, on 01/14/14 and the original document is stored at the North Dakota Department of Transportation

QUANTITIES
SEE DWG 2-019.458-20

US 2 & BISON DRIVE/18TH STREET
WILLISTON

(SHOWING REINFORCING)

PIER 2 DETAILS

STATE	PROJECT NUMBER	SECTION NO.	SHEET NO.
ND	SOIA-7-002(130)019	170	20

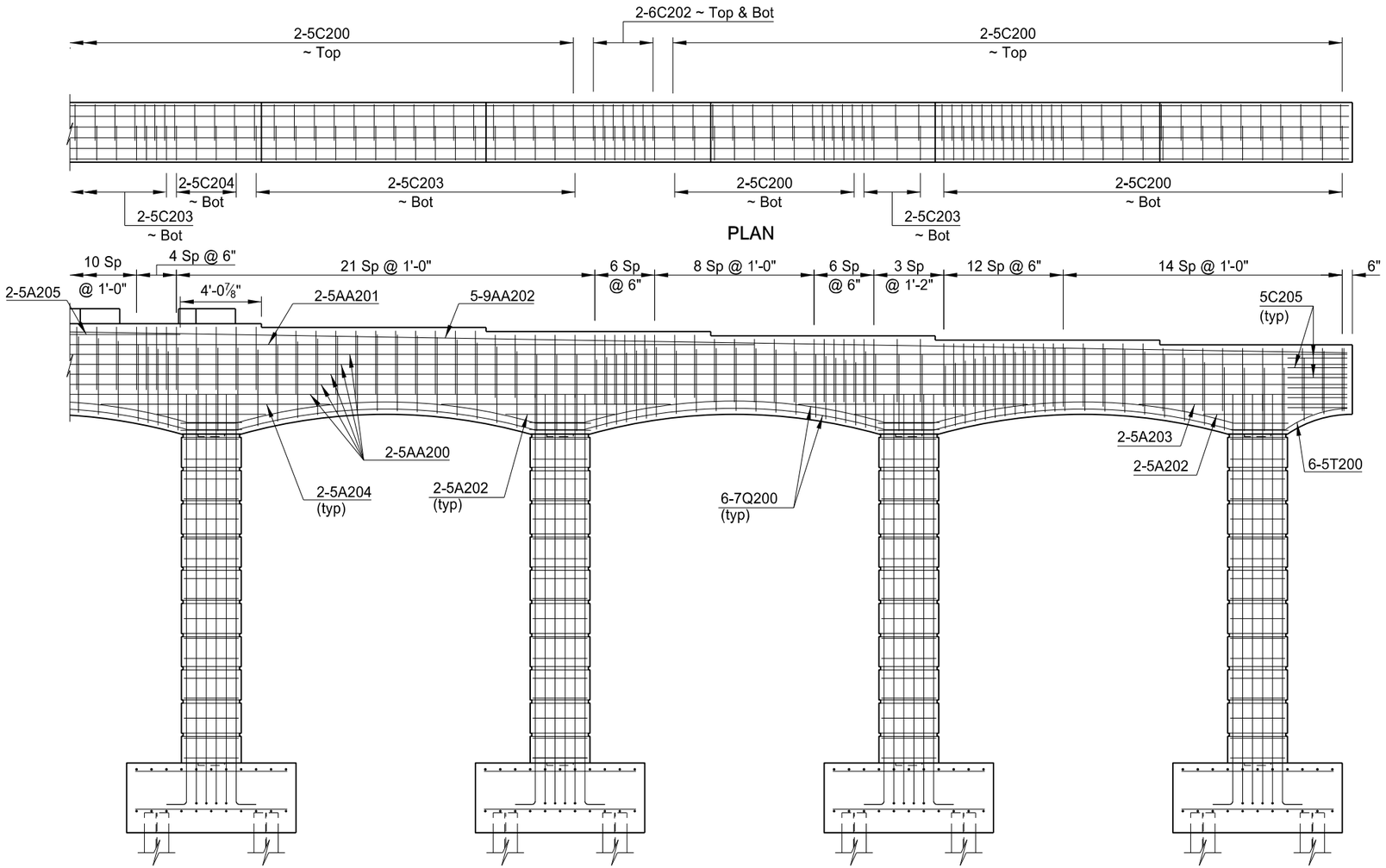

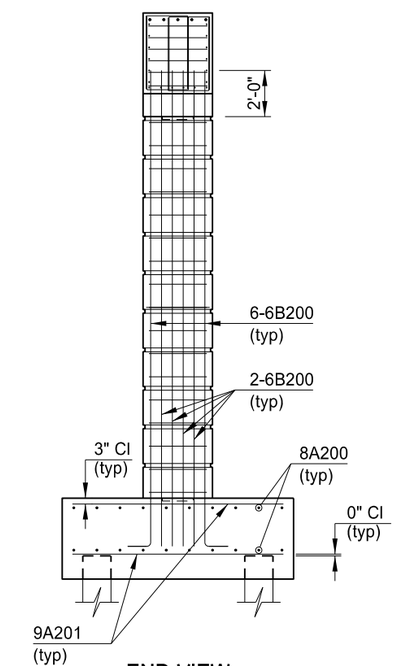

This document was originally issued and sealed by Ryan A. Rykowsky, Registration Number PE 6691, on 01/14/14 and the original document is stored at the North Dakota Department of Transportation

QUANTITIES	
CLASS AE-3 CONCRETE	201.5 CY
REINFORCING STEEL	31,252 LBS

US 2 & BISON DRIVE/18TH STREET
WILLISTON

(SHOWING REINFORCING)

PIER 2 DETAILS

STATE	PROJECT NUMBER	SECTION NO.	SHEET NO.
ND	SOIA-7-002(130)019	170	21

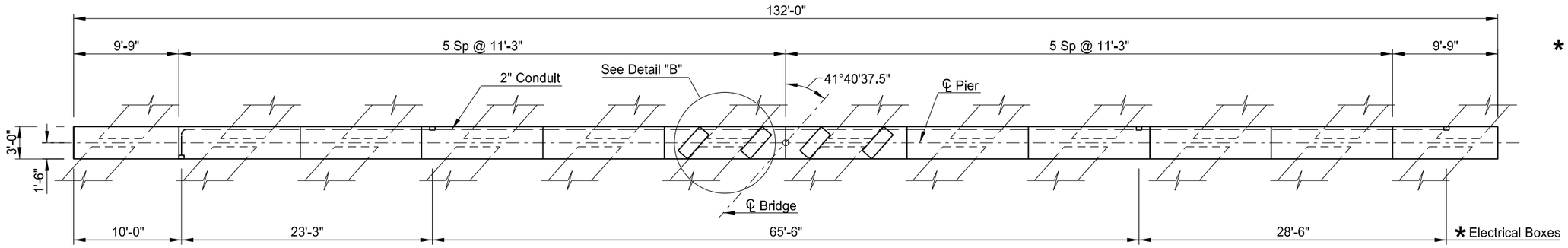

PLAN

* The electrical boxes shall be 6" x 6" x 4" NEMA Type 1 enclosures made from 16 gage galvanized steel. The cover shall be screwed to the box. Pull wire shall be installed in the conduit boxes.

All material and labor to install the conduit,electrical boxes and pull wire shall be included in the bid item "Class AE-3 Concrete."

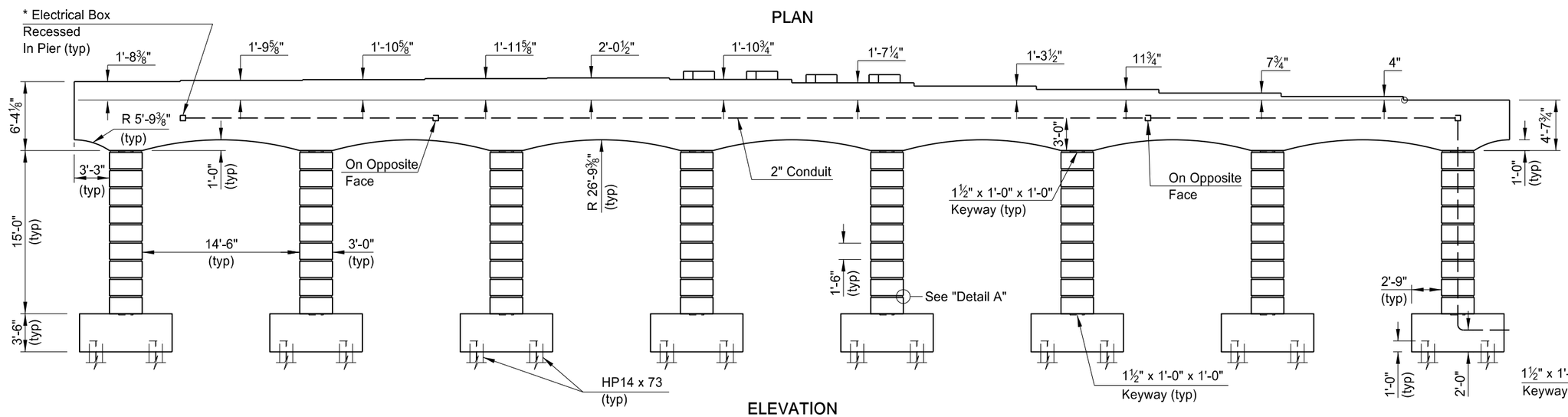

ELEVATION

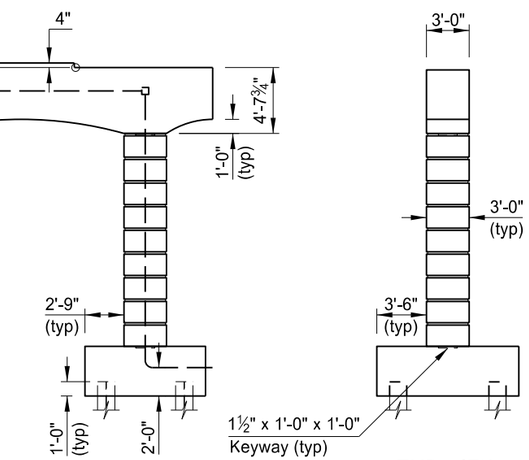

END VIEW

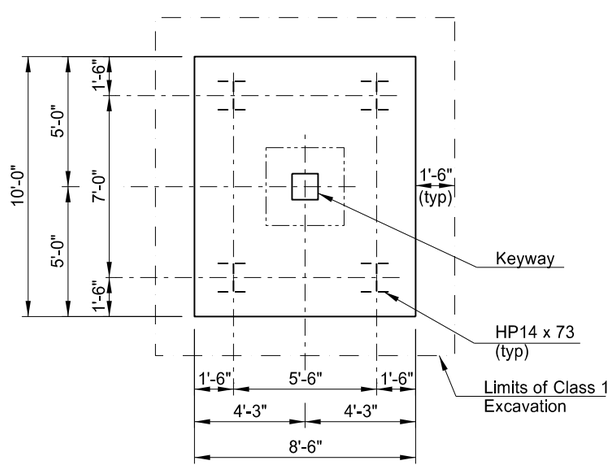

TYP FOOTING PLAN

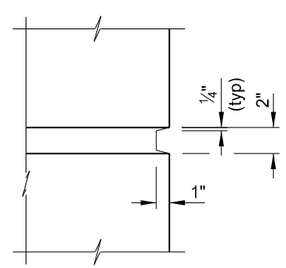

DETAIL A

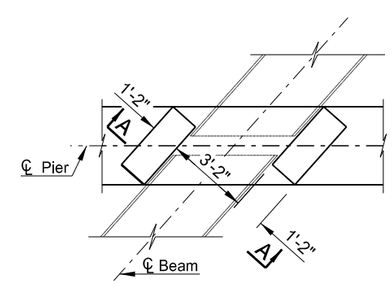

DETAIL B

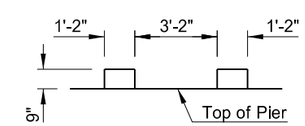

A-A

This document was originally issued and sealed by Ryan A. Rykowsky, Registration Number PE 6691, on 01/14/14 and the original document is stored at the North Dakota Department of Transportation

QUANTITIES

SEE DWG 2-019.458-23

US 2 & BISON DRIVE/18TH STREET
WILLISTON

(SHOWING DIMENSIONS)

PIER 3 DETAILS

STATE	PROJECT NUMBER	SECTION NO.	SHEET NO.
ND	SOIA-7-002(130)019	170	22

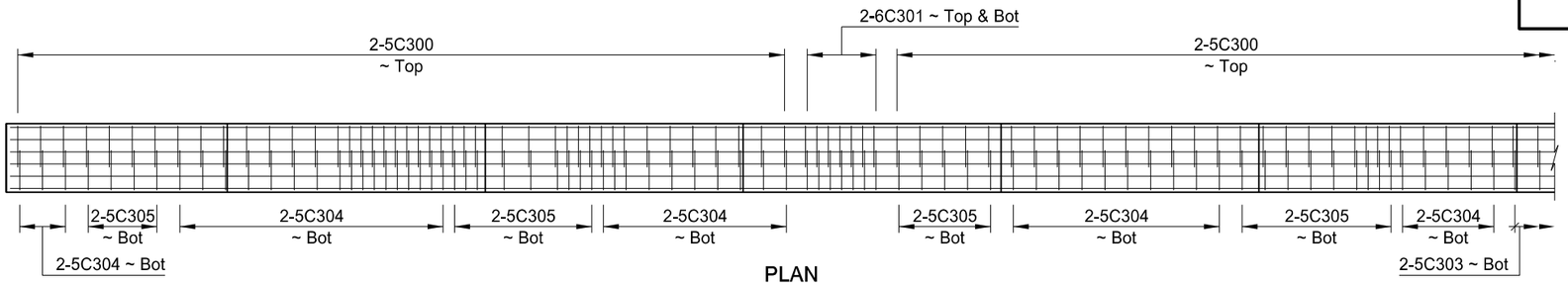

PLAN

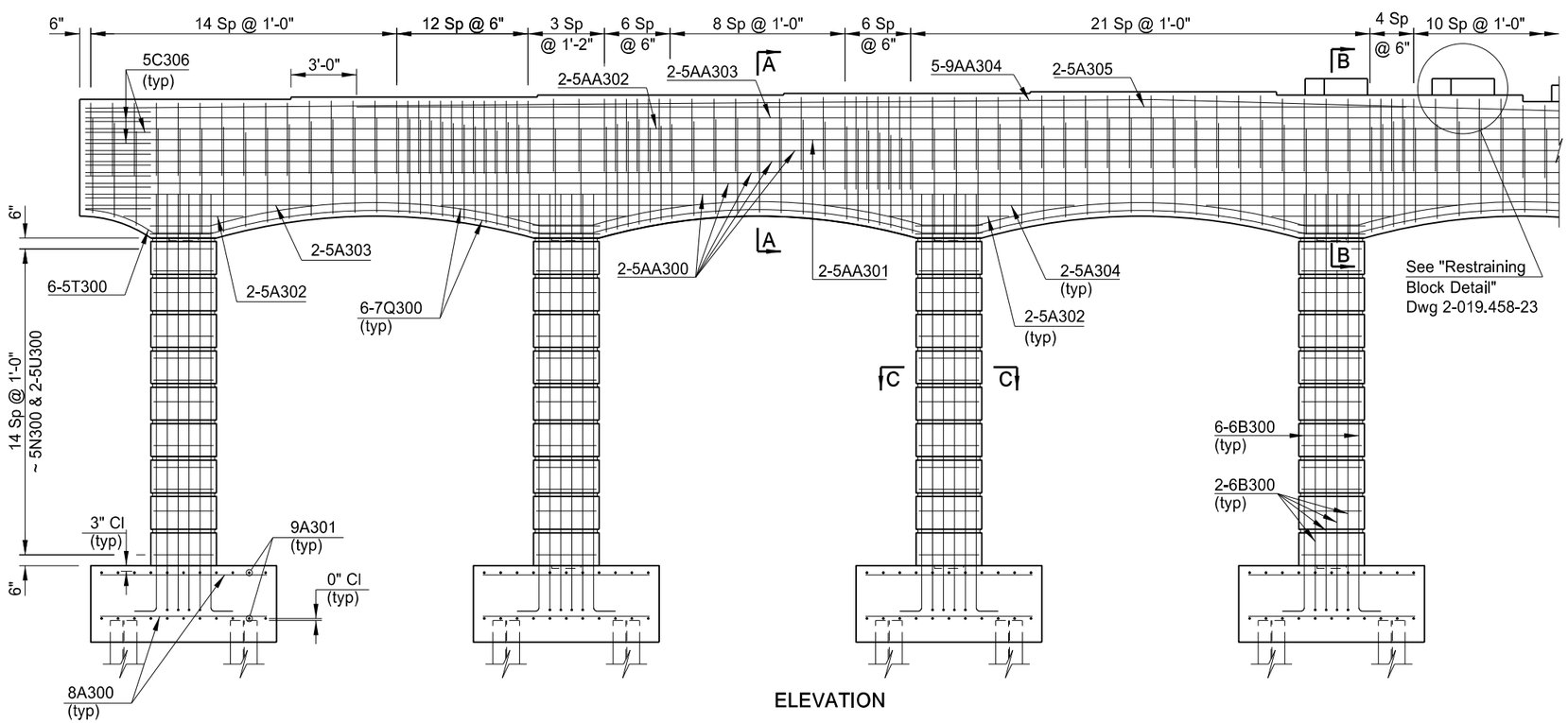

ELEVATION

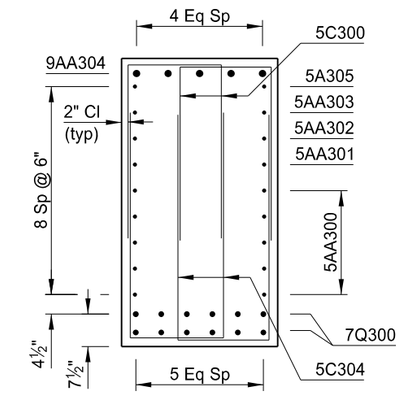

(SECTION AT CENTER OF ARCH)

A-A

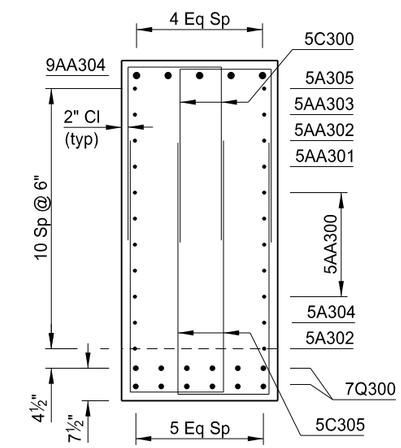

(SECTION AT CENTER OF COLUMN)

B-B

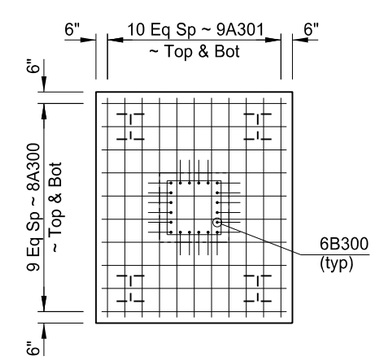

FOOTING PLAN

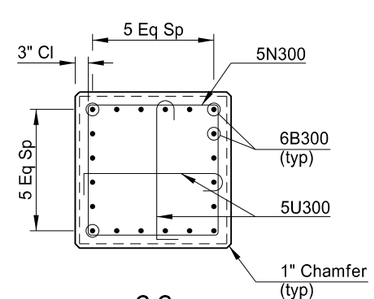

C-C

This document was originally issued and sealed by Ryan A. Rykowsky, Registration Number PE 6691, on 01/14/14 and the original document is stored at the North Dakota Department of Transportation

QUANTITIES
SEE DWG 2-019.458-23

US 2 & BISON DRIVE/18TH STREET
WILLISTON

(SHOWING REINFORCING)

PIER 3 DETAILS

STATE	PROJECT NUMBER	SECTION NO.	SHEET NO.
ND	SOIA-7-002(130)019	170	23

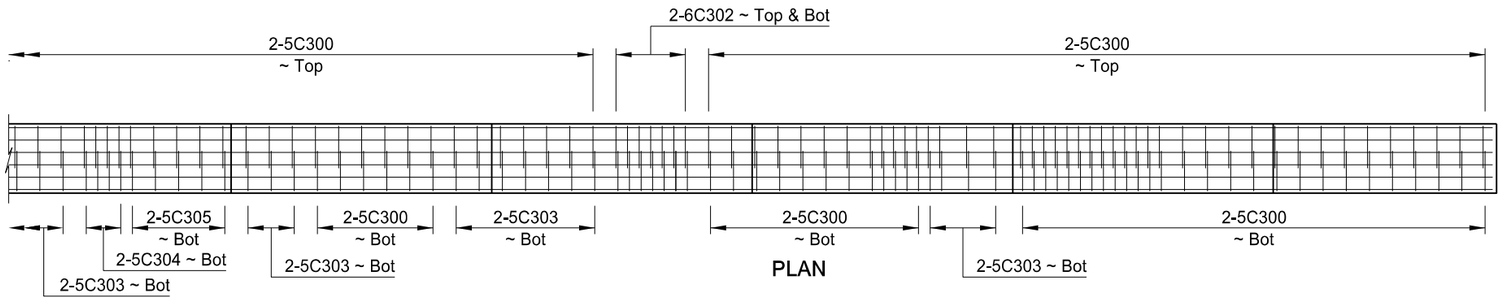

PLAN

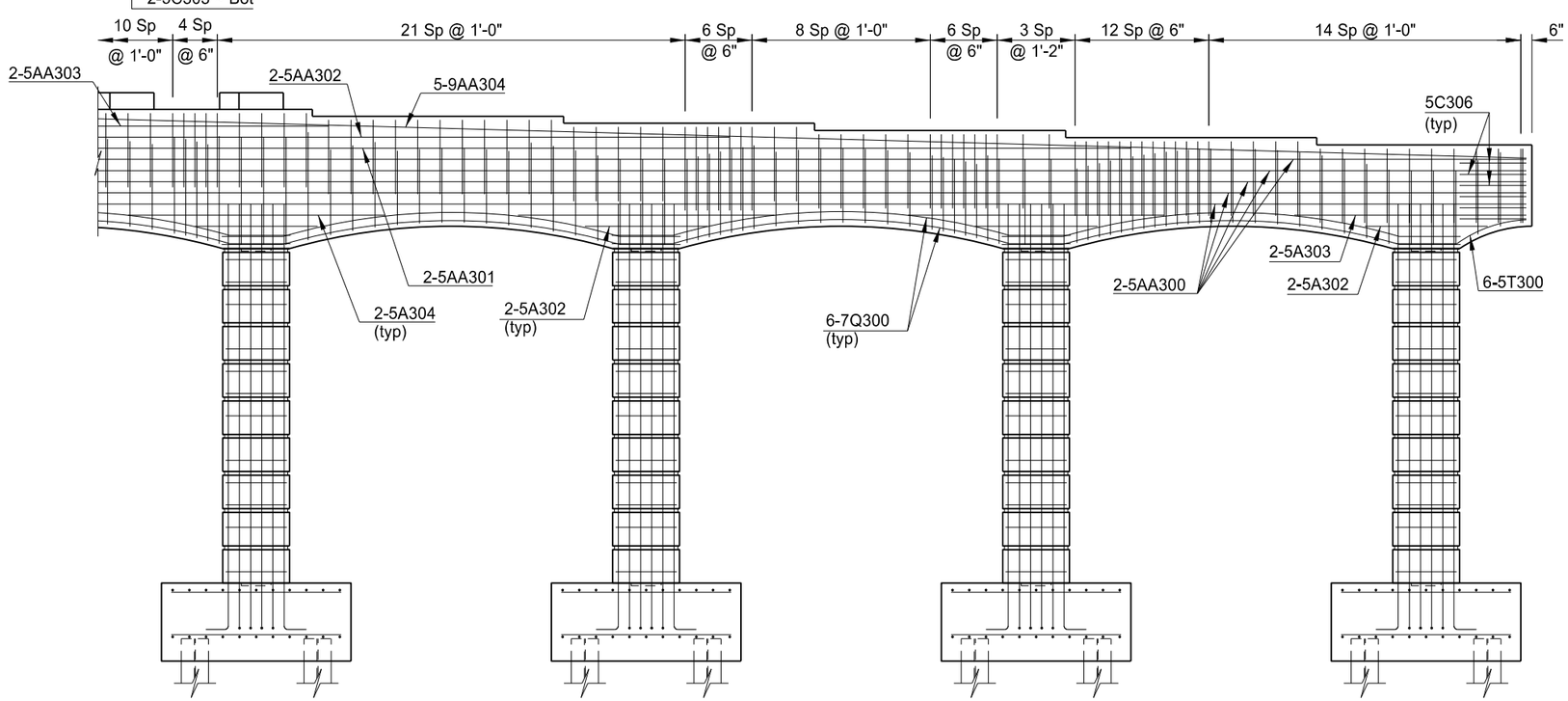

ELEVATION

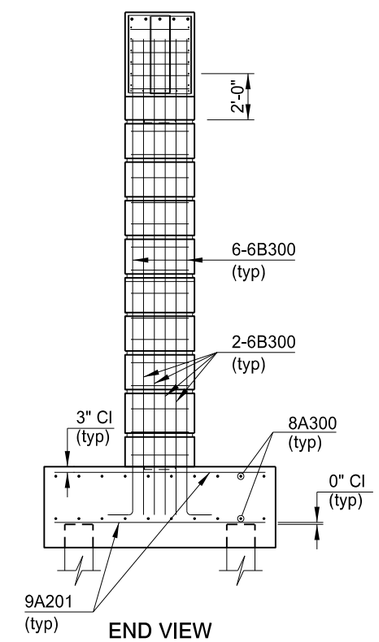

END VIEW

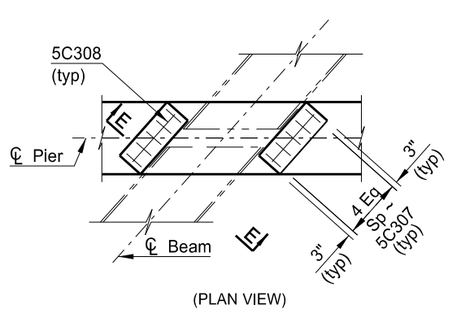

(PLAN VIEW)

RESTRAINING BLOCK DETAIL

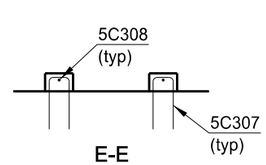

E-E

This document was originally issued and sealed by Ryan A. Rykowsky, Registration Number PE 6691, on 01/14/14 and the original document is stored at the North Dakota Department of Transportation

QUANTITIES	
CLASS AE-3 CONCRETE	208.5 CY
REINFORCING STEEL	31,511 LBS

US 2 & BISON DRIVE/18TH STREET
WILLISTON

(SHOWING REINFORCING)

PIER 3 DETAILS

STATE	PROJECT NUMBER	SECTION NO.	SHEET NO.
ND	SOIA-7-002(130)019	170	24

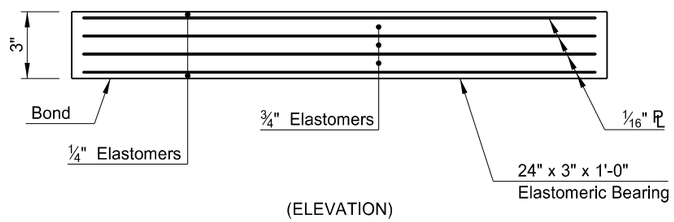

(ELEVATION)

ELASTOMERIC BEARING @ ABUTMENT 1

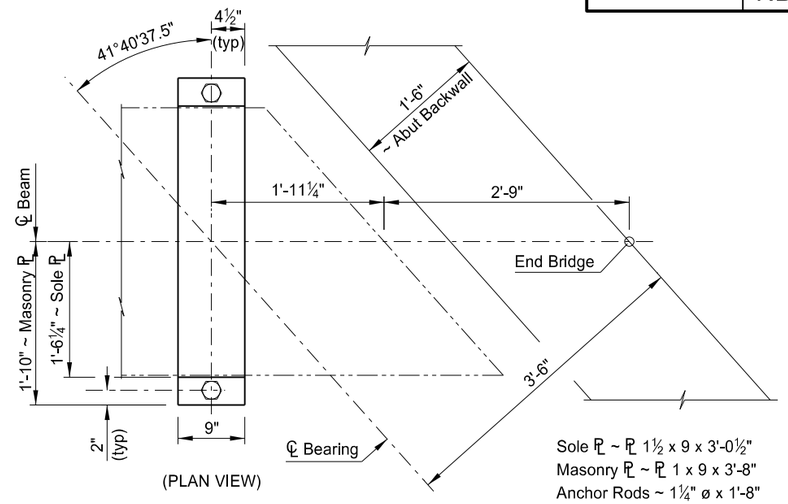

(PLAN VIEW)

NOTES:

The sole plate shall be field welded to the girder's bearing plate.

The sole plates and masonry plates shall be painted brown, color number 30475, and shall meet Federal Standard No. 595B colors.

The neoprene elastomeric bearing pads shall be bonded to the bearing seat with an epoxy adhesive as approved by the bearing manufacturer for bonding neoprene to concrete.

The neoprene elastomeric bearing pads shall be 60 durometer.

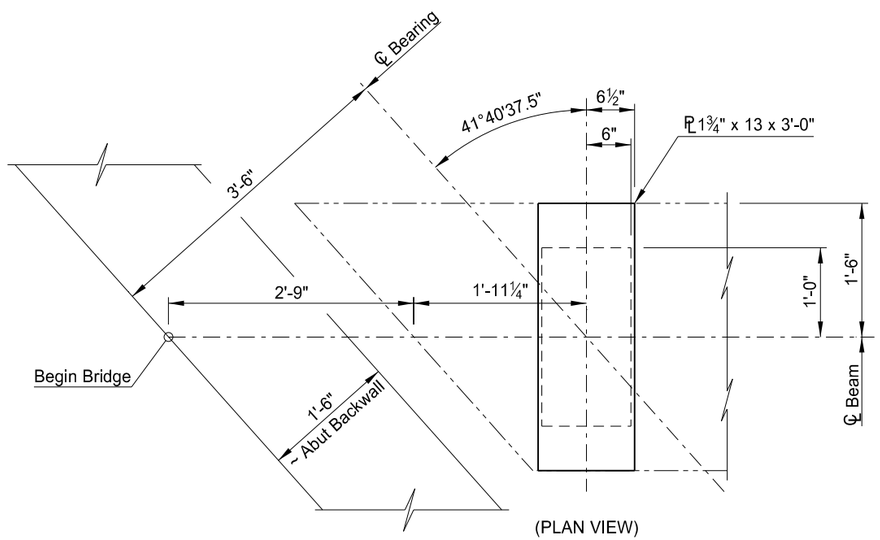

(PLAN VIEW)

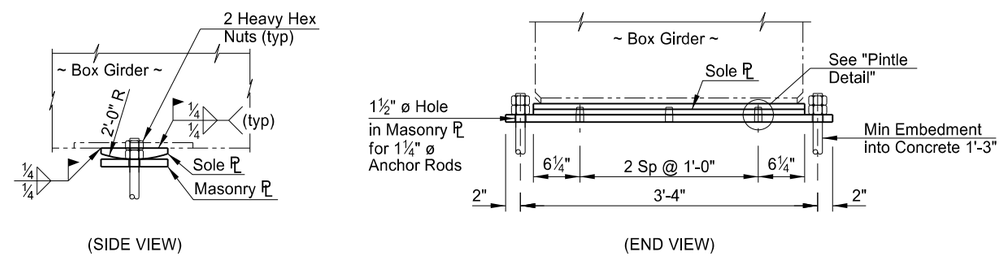

(SIDE VIEW) (END VIEW)

FIXED BEARING @ ABUTMENT 4

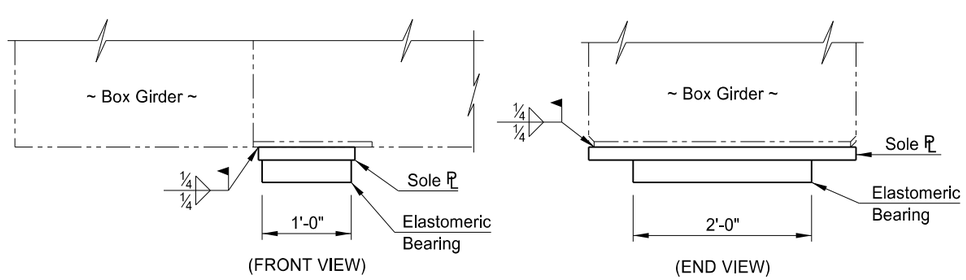

(FRONT VIEW) (END VIEW)

EXPANSION BEARING @ ABUTMENT 1

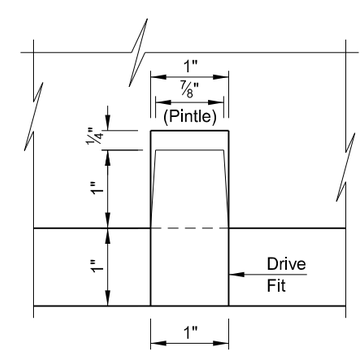

PINTLE DETAIL

This document was originally issued and sealed by Ryan A. Rykowsky, Registration Number PE 6691, on 01/14/14 and the original document is stored at the North Dakota Department of Transportation

QUANTITIES
SEE DWG 2-019.458-25

US 2 & BISON DRIVE/18TH STREET
WILLISTON

(ABUT 1 & 4)

BEARING DETAILS

STATE	PROJECT NUMBER	SECTION NO.	SHEET NO.
ND	SOIA-7-002(130)019	170	25

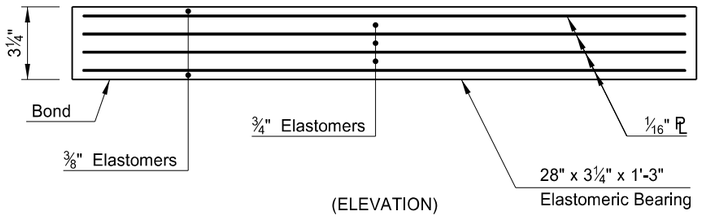

(ELEVATION)

ELASTOMERIC BEARING @ PIERS 2 & 3

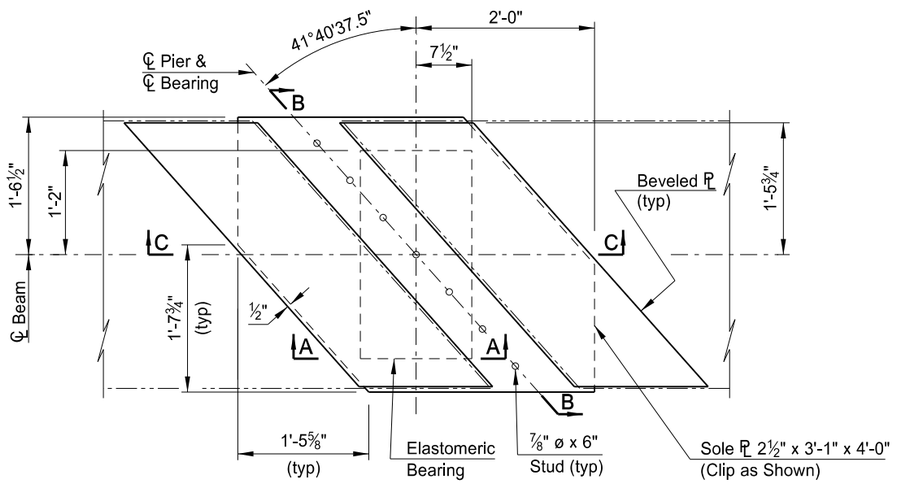

(PLAN VIEW)

PLATE DETAIL @ PIERS 2 & 3

LOCATION	GIRDER NO.	BEVELED PLATE TABLE					
		SOUTH PL			NORTH PL		
		MARK	a (in)	b (in)	MARK	c (in)	d (in)
PIER 2	1	2.1.S	5/8	13/16	2.1.N	13/16	13/16
	2	2.2.S	5/8	13/16	2.2.N	13/16	3/4
	3	2.3.S	5/8	13/16	2.3.N	13/16	3/4
	4	2.4.S	11/16	13/16	2.4.N	13/16	11/16
	5	2.5.S	11/16	13/16	2.5.N	13/16	11/16
	6	2.6.S	3/4	13/16	2.6.N	13/16	5/8
	7	2.7.S	3/4	13/16	2.7.N	13/16	5/8
	8	2.8.S	13/16	13/16	2.8.N	13/16	9/16
	9	2.9.S	13/16	13/16	2.9.N	3/4	9/16
	10	2.10.S	7/8	13/16	2.10.N	3/4	9/16
	11	2.11.S	7/8	7/8	2.11.N	3/4	1/2
	12	2.12.S	15/16	7/8	2.12.N	3/4	1/2
PIER 3	1	3.1.S	1	1	3.1.N	7/8	5/8
	2	3.2.S	1 1/16	1	3.2.N	7/8	9/16
	3	3.3.S	1 1/16	1	3.3.N	7/8	9/16
	4	3.4.S	1 1/8	1	3.4.N	7/8	9/16
	5	3.5.S	1 1/8	1	3.5.N	7/8	1/2
	6	3.6.S	1 1/8	1	3.6.N	7/8	1/2
	7	3.7.S	1 3/16	1	3.7.N	7/8	1/2
	8	3.8.S	1 3/16	1	3.8.N	7/8	1/2
	9	3.9.S	1 1/4	1	3.9.N	7/8	1/2
	10	3.10.S	1 1/4	1 1/16	3.10.N	7/8	1/2
	11	3.11.S	1 5/16	1 1/16	3.11.N	7/8	1/2
	12	3.12.S	1 5/16	1 1/16	3.12.N	7/8	1/2

NOTES:

The beveled plates shall be field welded to the girder's bearing plate. The sole plate shall be field welded to the beveled plates.

The beveled plates shall be marked prior to shipping. The marks shall include the bearing location on the bridge and a direction arrow that points up-station. All marks shall be permanent and located on the top of the plate.

Fabricator has the option of sloping the sole plate in lieu of supplying beveled plates. Bearing elevations at the piers are based on the use of the beveled plates shown in the table.

Any adjustment to the plate thicknesses shown must be reflected in revised bearing elevations. The beveled plates and sole plates shall be painted brown, color number 30475, and shall meet Federal Standard No. 595B colors.

The neoprene elastomeric bearing pads shall be bonded to the bearing seat with an epoxy adhesive as approved by the bearing manufacturer for bonding neoprene to concrete.

The neoprene elastomeric bearing pads shall be 60 durometer.

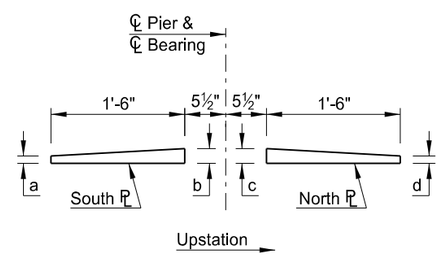

C-C

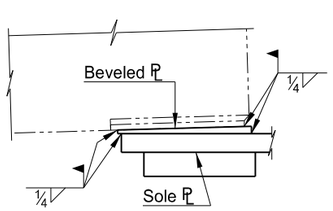

A-A

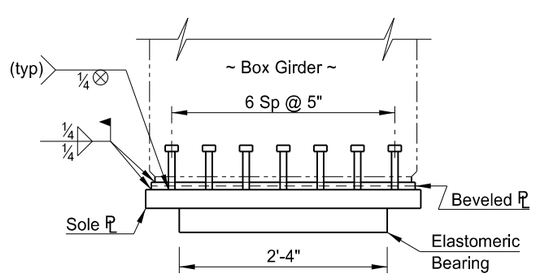

B-B

This document was originally issued and sealed by Ryan A. Rykowsky, Registration Number PE 6691, on 01/14/14 and the original document is stored at the North Dakota Department of Transportation

QUANTITIES	
ELASTOMERIC BEARING PAD	94.0 SF
STRUCTURAL STEEL	1 LSUM

US 2 & BISON DRIVE/18TH STREET
WILLISTON

(PIER 2 & 3)

BEARING DETAILS

STATE	PROJECT NUMBER	SECTION NO.	SHEET NO.
ND	SOIA-7-002(130)019	170	26

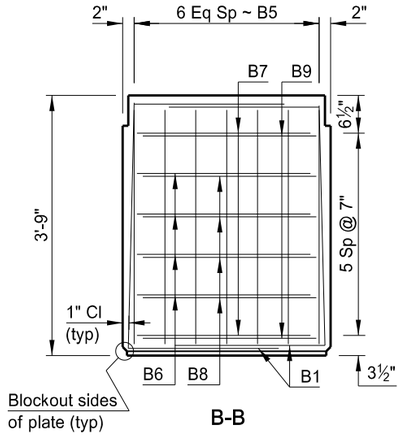

B-B

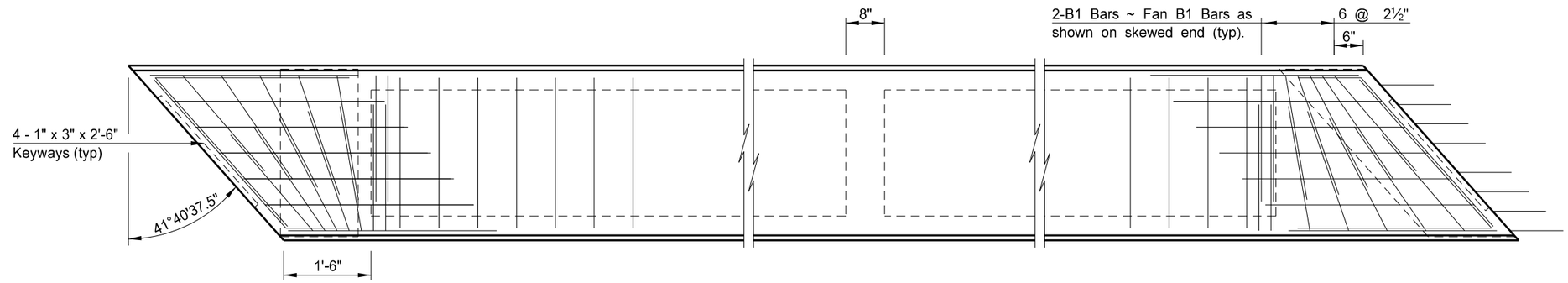

PLAN

NOTE:

① Omit T1 Bars at Abut 1 & Abut 4

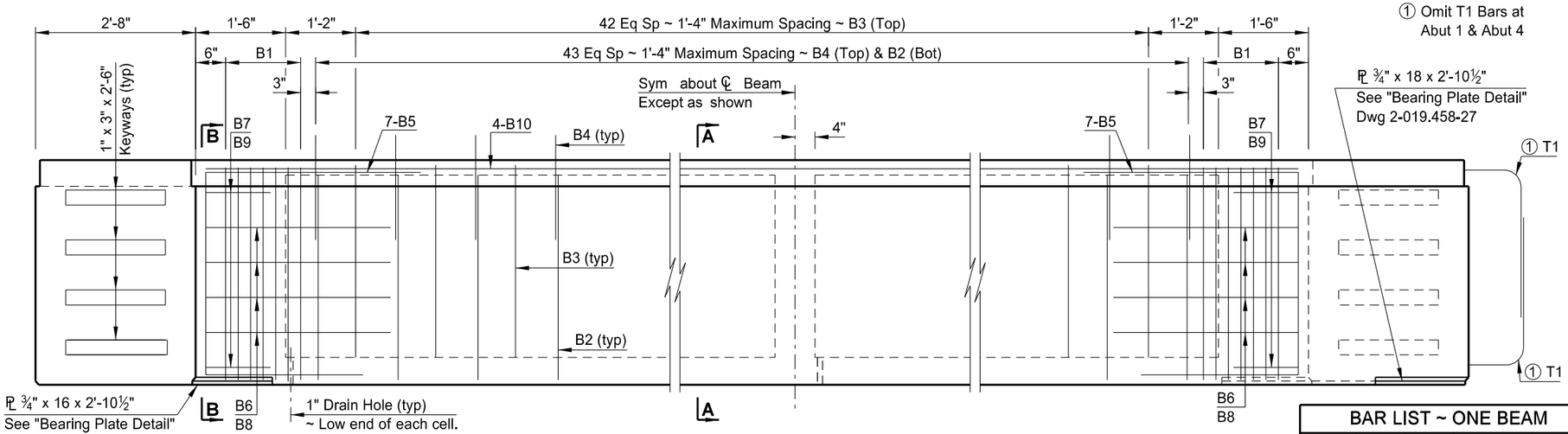

ELEVATION

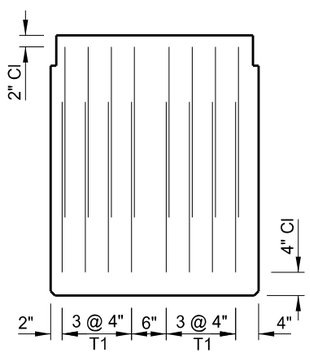

END VIEW

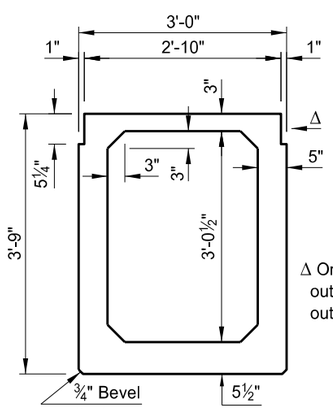

Δ Omit notch from outside face of outer beam.

(SHOWING DIMENSIONS)

A-A

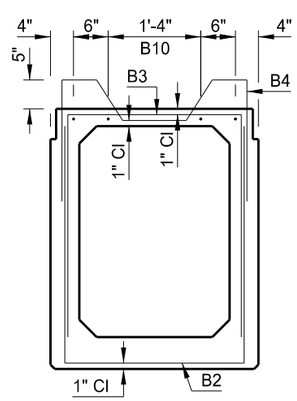

(SHOWING REINFORCING)

A-A

** Field bend as shown (Grade 40).

* Welded Wire Reinforcing with minimum circumferential steel area of 0.15 sq in per ft may be substituted for B2 and B3 bars.

This document was originally issued and sealed by Ryan A. Rykowsky, Registration Number PE 6691, on 01/14/14 and the original document is stored at the North Dakota Department of Transportation

BAR LIST ~ ONE BEAM

	MARK	SIZE	NO.	LENGTH	SHAPE
	B1	4	28	7'-11"	BENT
*	B2	4	44	9'-5"	BENT
*	B3	4	43	9'-0"	BENT
	B4	4	44	6'-9"	BENT
	B5	5	14	9'-7"	BENT
	B6	4	8	6'-6"	BENT
	B7	4	4	4'-6"	BENT
	B8	4	8	7'-5"	BENT
	B9	4	4	5'-5"	BENT
	B10	4	8	32'-10"	STR
**	T1	4	16	5'-3"	STR

QUANTITIES

BEAM LENGTH	63.0 LF

BEAM SECTION DATA

WT = 730.3 LBS/FT + 6357 LBS
CROSS SECTIONAL AREA = 678.5 IN^2
C.G. (FROM BOTTOM) = 20.48 IN
I = 164,979 IN^4
S_B = 8,056 IN^3

US 2 & BISON DRIVE/18TH STREET
WILLISTON

(SPANS 1 & 3)

**PRE-TENSIONED 45" x 36"
PRESTRESSED SPREAD BOX BEAM**

STATE	PROJECT NUMBER	SECTION NO.	SHEET NO.
ND	SOIA-7-002(130)019	170	27

NOTES:

At least 14 days prior to the forming and pouring of any beams, the Contractor shall submit shop drawings to the Engineer for review. The shop drawings shall include the total initial prestress force and the losses in the prestress due to elastic shortening, shrinking or creeping of concrete and the relaxation of steel stress as determined by the Contractor for his method of stressing.

Shop drawings shall show strand layout, pull down locations, tensioning forces, elongation and any proposed changes in reinforcing steel.

The final prestress force (remaining after all losses have been accounted for) and its corresponding center of gravity, shall be selected from those on a curve determined by the three values shown.

The beams shall be poured in all steel forms.

Minor changes to the shape of the beam and to reinforcing steel may be made to accommodate the forms of various contractors and their construction methods with the approval of the Engineer.

The tops of the beams shall be rough floated and broomed transversely for bond.

Provide handling hooks or devices as required by the Contractor. Hooks or devices provided will be subject to approval by the Engineer and shall be installed within 4'-0" of the end of beam.

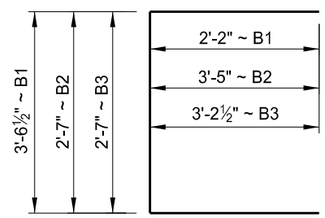

B1, B2 & B3

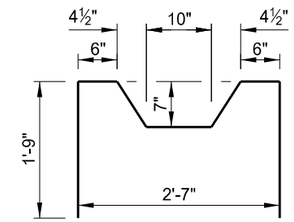

B4

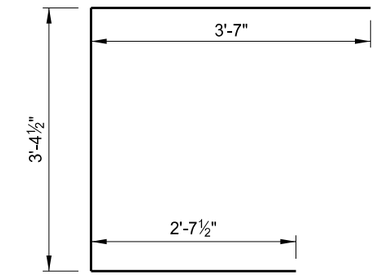

B5

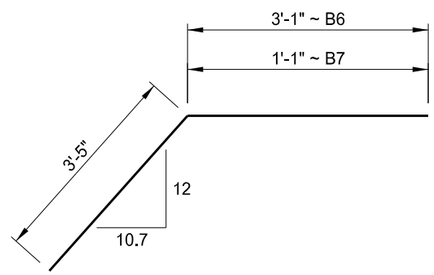

B6 & B7

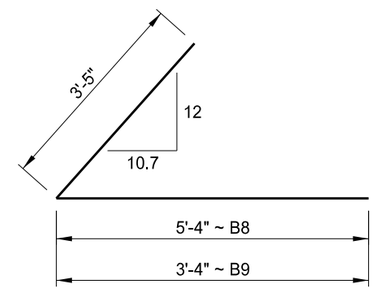

B8 & B9

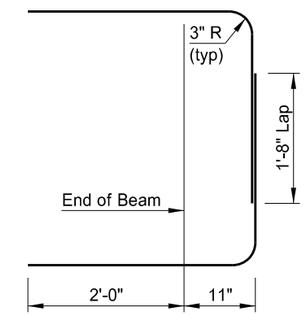

(AT PIERS)
T1

(DIMENSIONS SHOWN ARE OUT TO OUT)

BENT BAR DETAILS

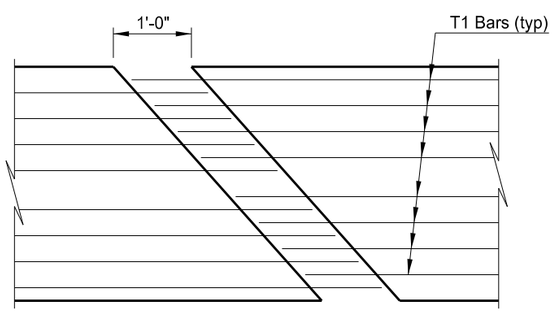

BEAM END PLAN AT PIER

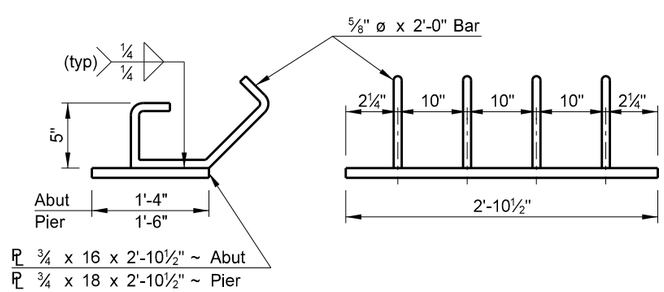

(Bearing plate to be Structural Steel M 270 Grade 36 hot dipped galvanized and included in the bid price for the beam.)

BEARING DETAIL

This document was originally issued and sealed by Ryan A. Rykowsky, Registration Number PE 6691, on 01/14/14 and the original document is stored at the North Dakota Department of Transportation

PRESTRESSING DATA

C.G.	FINAL FORCE	DETENSION STRENGTH	ACCEPTANCE STRENGTH	WEIGHT (TONS)	GIRDER LENGTH
2.00"	386.0 k	5000 psi (Min)	5000 psi (Min)	26.2	63'-0"
2.25"	389.2 k				
2.50"	392.5 k				

US 2 & BISON DRIVE/18TH STREET
WILLISTON

(SPANS 1 & 3)

PRE-TENSIONED 45" x 36"
PRESTRESSED SPREAD BOX BEAM

STATE	PROJECT NUMBER	SECTION NO.	SHEET NO.
ND	SOIA-7-002(130)019	170	28

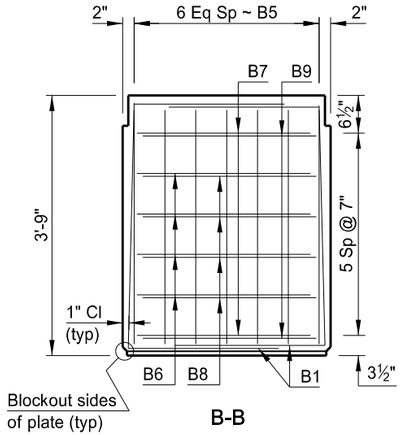

B-B

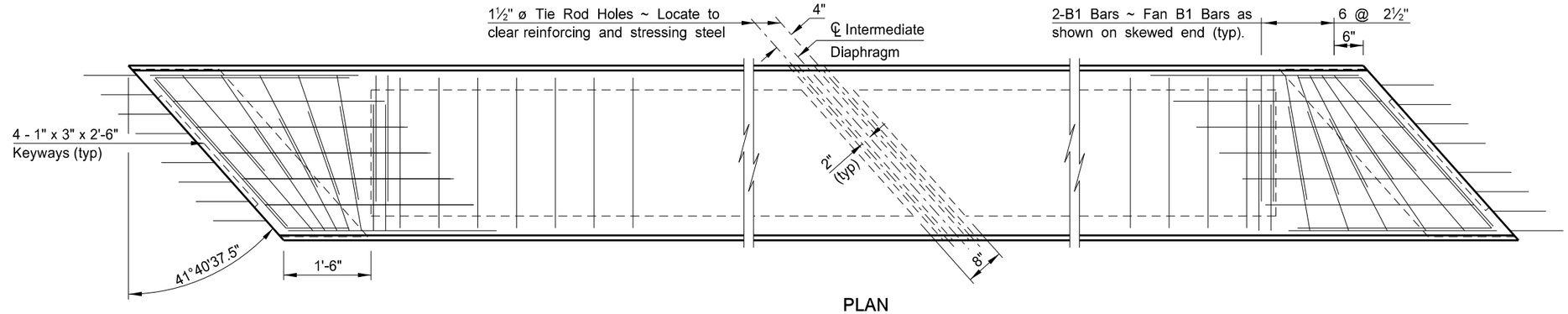

PLAN

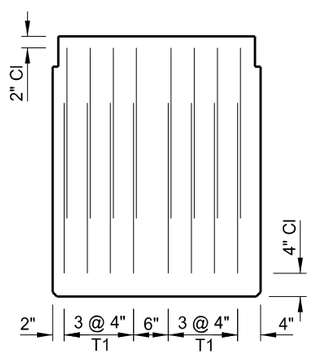

END VIEW

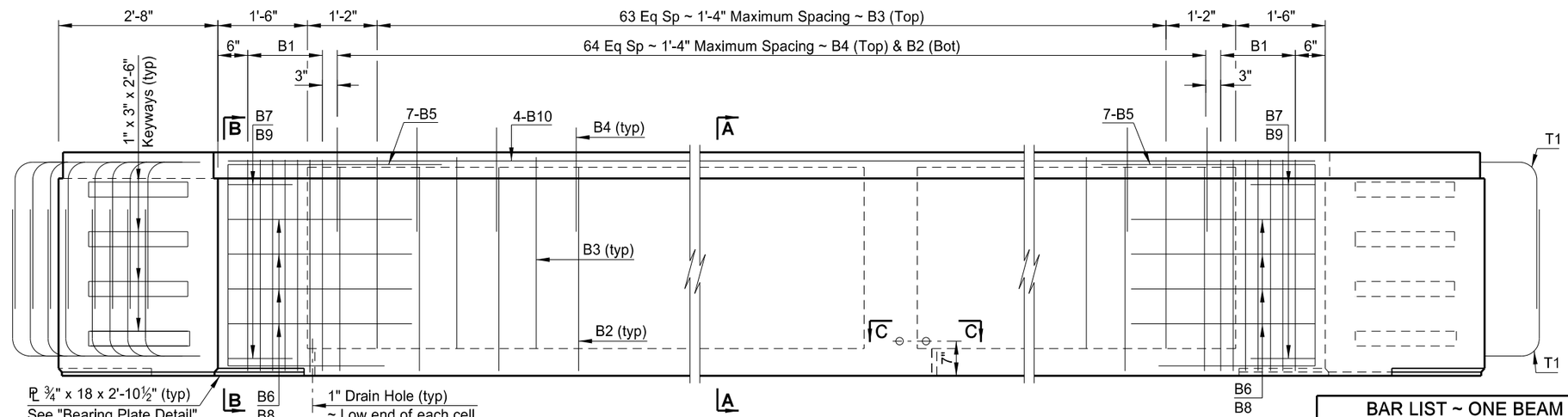

ELEVATION

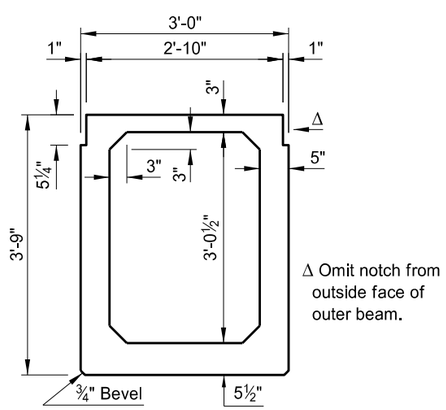

Δ Omit notch from outside face of outer beam.

(SHOWING DIMENSIONS)

A-A

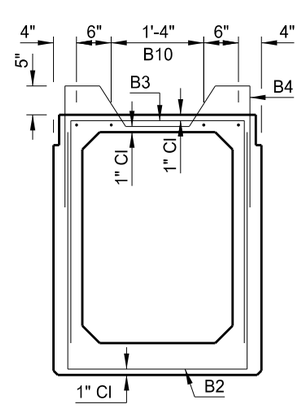

(SHOWING REINFORCING)

A-A

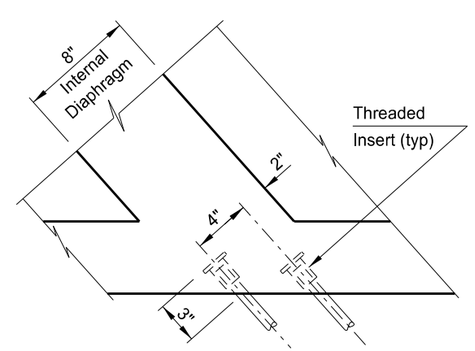

(OUTER BEAMS ONLY)

DIAPHRAGM BAR INSERT

C-C

** Field bend as shown (Grade 40).

* Welded Wire Reinforcing with minimum circumferential steel area of 0.15 sq in per ft may be substituted for B2 and B3 bars.

This document was originally issued and sealed by Ryan A. Rykowsky, Registration Number PE 6691, on 01/14/14 and the original document is stored at the North Dakota Department of Transportation

BAR LIST ~ ONE BEAM

	MARK	SIZE	NO.	LENGTH	SHAPE
	B1	4	28	7'-11"	BENT
*	B2	4	65	9'-5"	BENT
*	B3	4	64	9'-0"	BENT
	B4	4	65	6'-9"	BENT
	B5	5	14	9'-7"	BENT
	B6	4	8	6'-6"	BENT
	B7	4	4	4'-6"	BENT
	B8	4	8	7'-5"	BENT
	B9	4	4	5'-5"	BENT
	B10	4	12	32'-5"	STR
**	T1	4	32	5'-3"	STR

QUANTITIES

BEAM LENGTH	91.5 LF

BEAM SECTION DATA

WT = 730.3 LBS/FT + 6360 LBS
CROSS SECTIONAL AREA = 678.5 IN^2
C.G. (FROM BOTTOM) = 20.48 IN
I = 164,979 IN^4
S_B = 8,056 IN^3

US 2 & BISON DRIVE/18TH STREET
WILLISTON

(SPAN 2)

PRE-TENSIONED 45" x 36"
PRESTRESSED SPREAD BOX BEAM

STATE	PROJECT NUMBER	SECTION NO.	SHEET NO.
ND	SOIA-7-002(130)019	170	29

NOTES:

At least 14 days prior to the forming and pouring of any beams, the Contractor shall submit shop drawings to the Engineer for review. The shop drawings shall include the total initial prestress force and the losses in the prestress due to elastic shortening, shrinking or creeping of concrete and the relaxation of steel stress as determined by the Contractor for his method of stressing.

Shop drawings shall show strand layout, pull down locations, tensioning forces, elongation and any proposed changes in reinforcing steel.

The final prestress force (remaining after all losses have been accounted for) and its corresponding center of gravity, shall be selected from those on a curve determined by the three values shown.

The beams shall be poured in all steel forms.

Holes and inserts to accommodate the diaphragm bars shall be provided in the beams at locations as shown.

Minor changes to the shape of the beam and to reinforcing steel may be made to accommodate the forms of various contractors and their construction methods with the approval of the Engineer.

The tops of the beams shall be rough floated and broomed transversely for bond.

Provide handling hooks or devices as required by the Contractor. Hooks or devices provided will be subject to approval by the Engineer and shall be installed within 4'-0" of the end of beam.

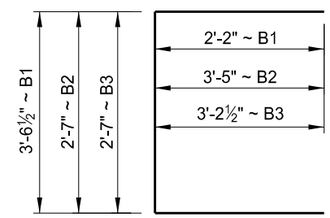

B1, B2 & B3

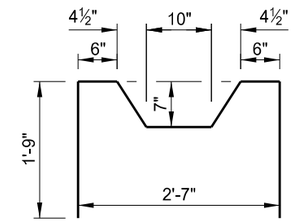

B4

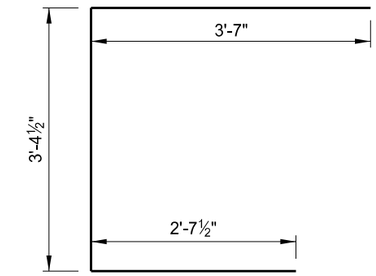

B5

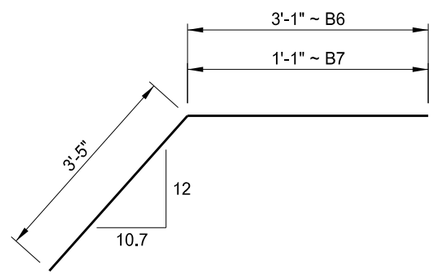

B6 & B7

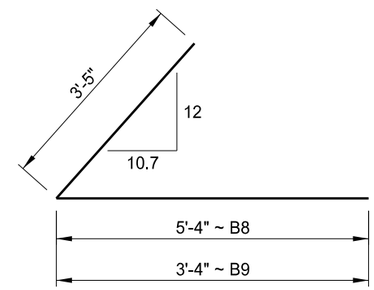

B8 & B9

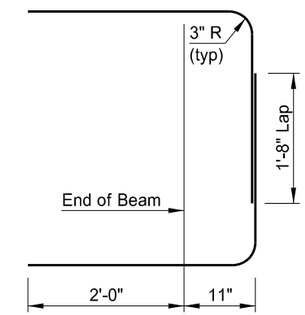

(AT PIERS)
T1

(DIMENSIONS SHOWN ARE OUT TO OUT)

BENT BAR DETAILS

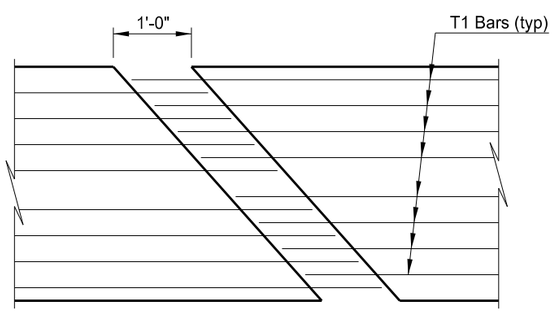

BEAM END PLAN AT PIER

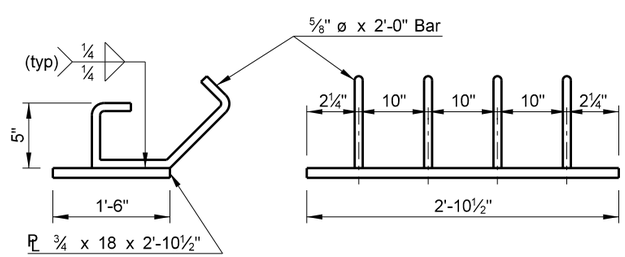

(Bearing plate to be Structural Steel M 270 Grade 36 hot dipped galvanized and included in the bid price for the beam.)

BEARING DETAIL

This document was originally issued and sealed by Ryan A. Rykowsky, Registration Number PE 6691, on 01/14/14 and the original document is stored at the North Dakota Department of Transportation

PRESTRESSING DATA					
C.G.	FINAL FORCE	DETENSION STRENGTH	ACCEPTANCE STRENGTH	WEIGHT (TONS)	GIRDER LENGTH
2.50"	880.8 k	5000 psi (Min)	5000 psi (Min)	36.6	91'-6"
2.75"	888.2 k				
3.00"	895.8 k				

US 2 & BISON DRIVE/18TH STREET
WILLISTON

(SPAN 2)

PRE-TENSIONED 45" x 36"
PRESTRESSED SPREAD BOX BEAM

STATE	PROJECT NUMBER	SECTION NO.	SHEET NO.
ND	SOIA-7-002(130)019	170	30

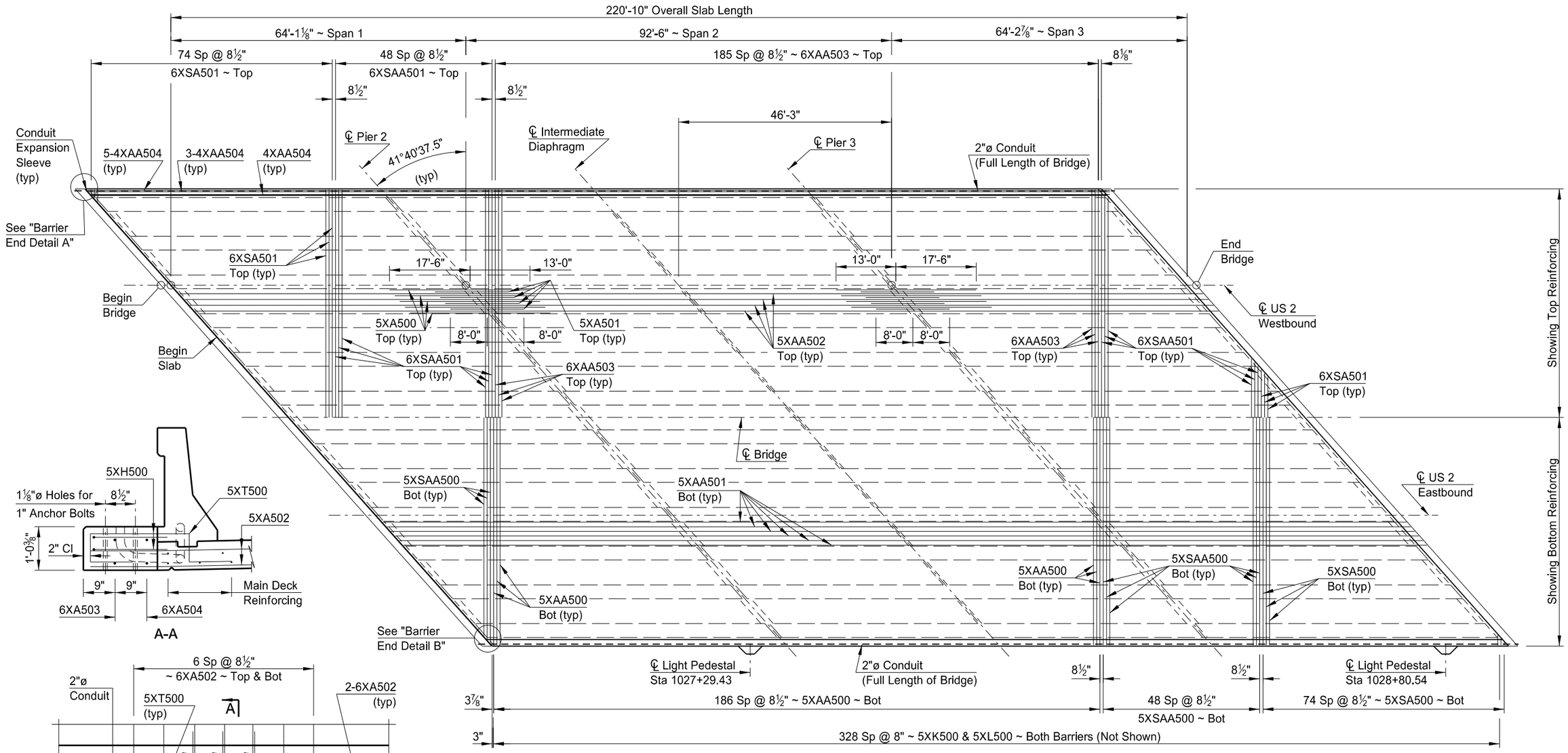

A-A

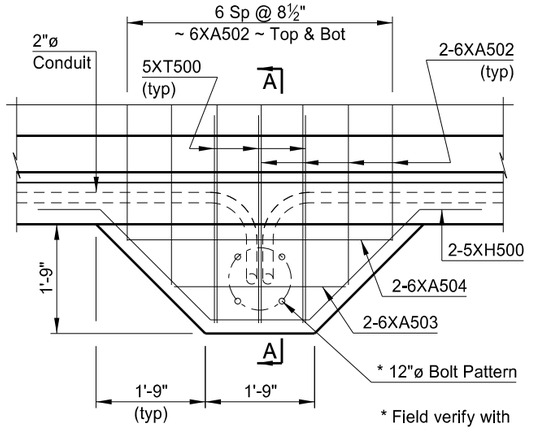

PLAN
LIGHT PEDESTAL DETAIL

** Fan bars on end

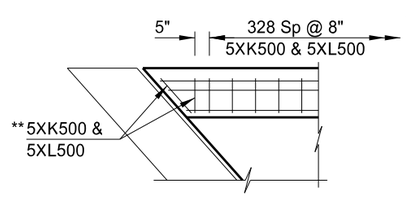

PLAN
BARRIER END DETAIL A

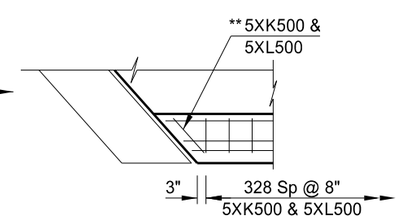

PLAN
BARRIER END DETAIL B

This document was originally issued and sealed by Ryan A. Rykowsky, Registration Number PE 6691, on 01/14/14 and the original document is stored at the North Dakota Department of Transportation

QUANTITIES

SEE DWG. 2-019.458-35

US 2 & BISON DRIVE/18TH STREET
WILLISTON

SLAB LAYOUT

STATE	PROJECT NUMBER	SECTION NO.	SHEET NO.
ND	SOIA-7-002(130)019	170	31

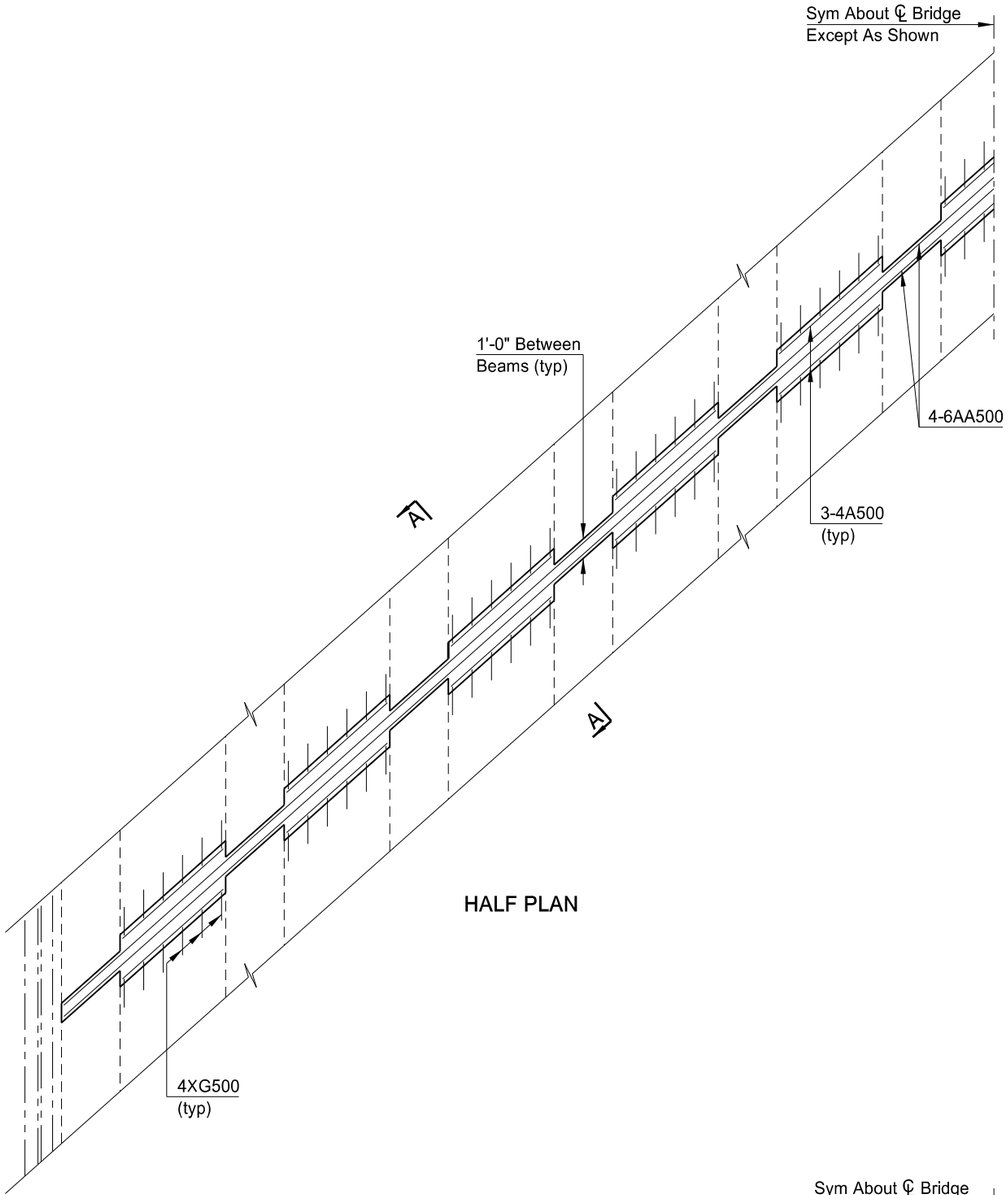

HALF PLAN

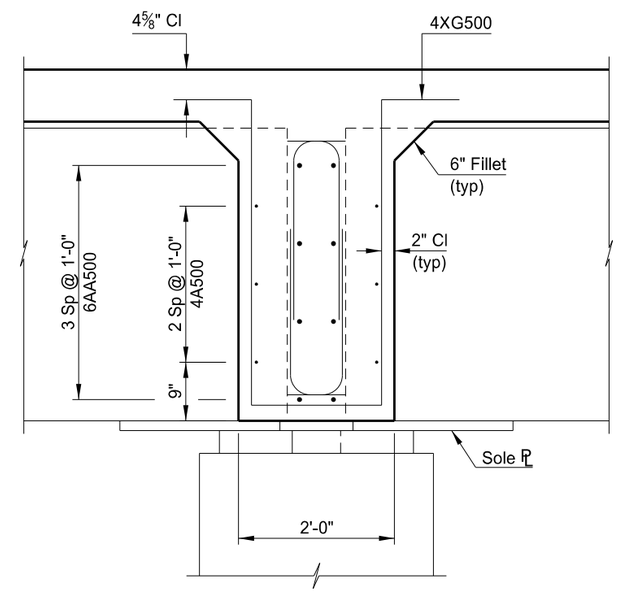

A-A

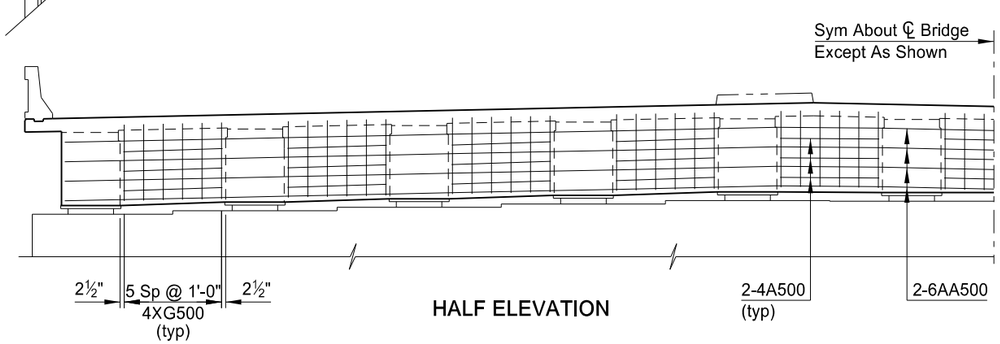

HALF ELEVATION

This document was originally issued and sealed by Ryan A. Rykowsky, Registration Number PE 6691, on 01/14/14 and the original document is stored at the North Dakota Department of Transportation

QUANTITIES

SEE DWG. 2-019.458-35

US 2 & BISON DRIVE/18TH STREET
WILLISTON

PIER DIAPHRAGM DETAILS

STATE	PROJECT NUMBER	SECTION NO.	SHEET NO.
ND	SOIA-7-002(130)019	170	32

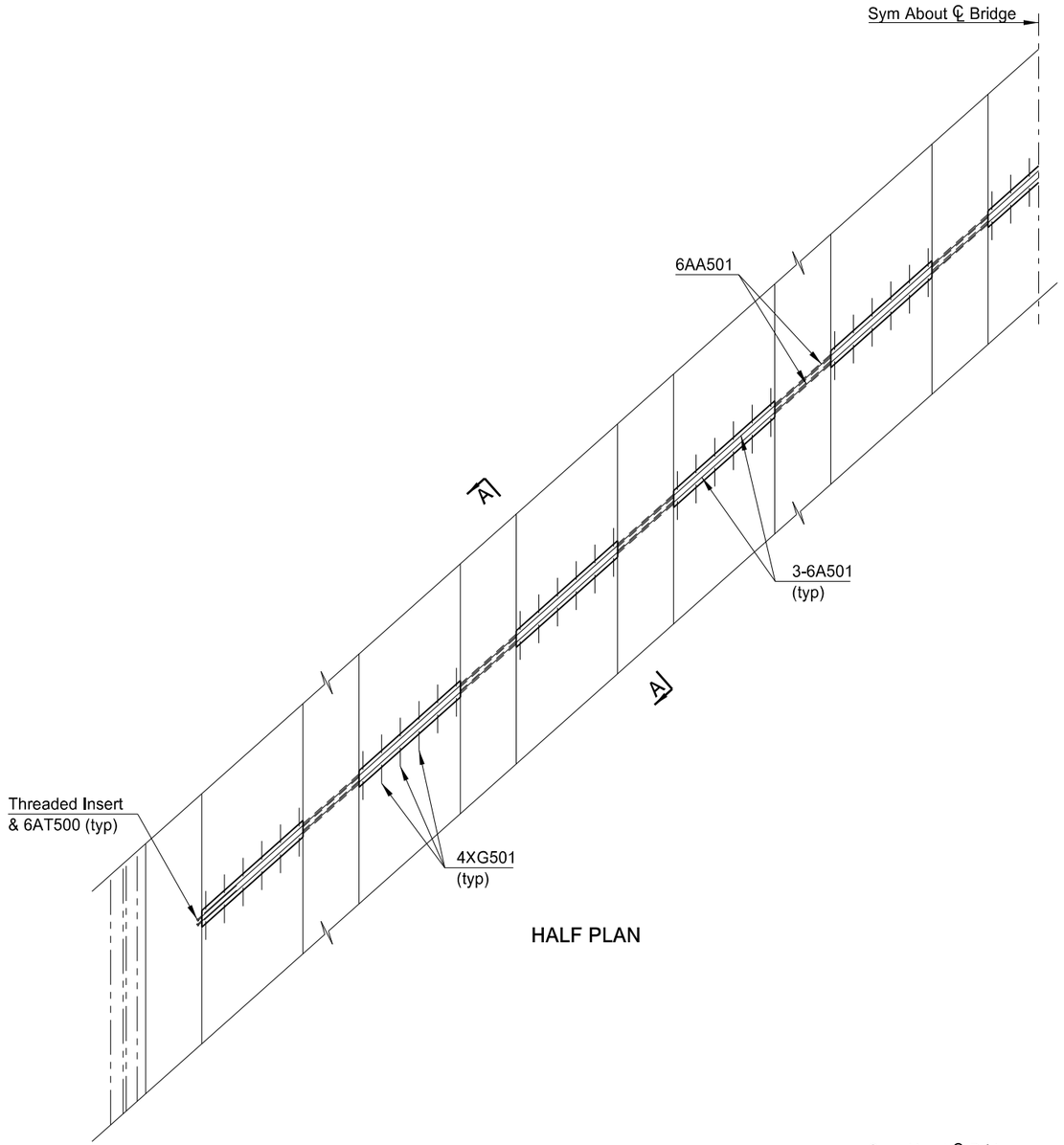

HALF PLAN

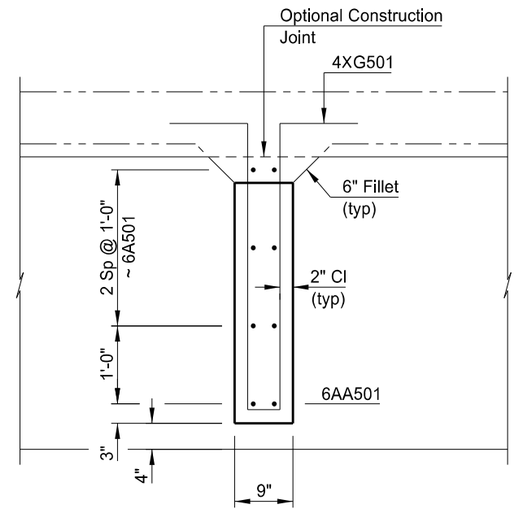

A-A

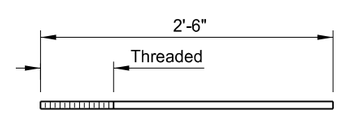

No. 6 Reinforcing Steel ~ Included in the Prestressed Beam bid item.

6AT500 DETAIL

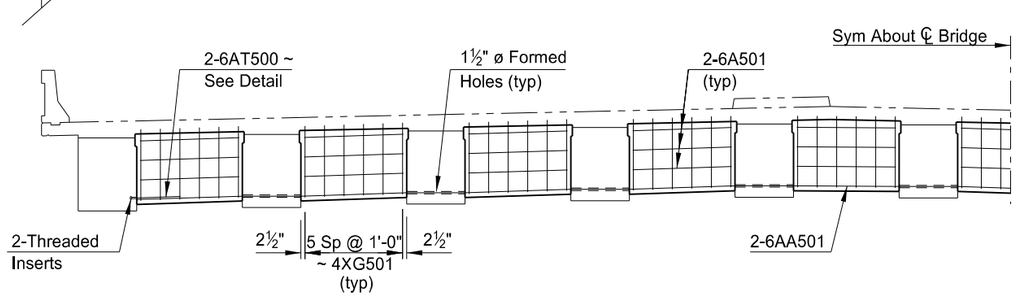

HALF ELEVATION

This document was originally issued and sealed by Ryan A. Rykowsky, Registration Number PE 6691, on 01/14/14 and the original document is stored at the North Dakota Department of Transportation

QUANTITIES

SEE DWG. SEE DWG. 2-019.458-35

US 2 & BISON DRIVE/18TH STREET
WILLISTON

INTERMEDIATE DIAPHRAGM DETAILS

STATE	PROJECT NUMBER	SECTION NO.	SHEET NO.
ND	SOIA-7-002(130)019	170	33

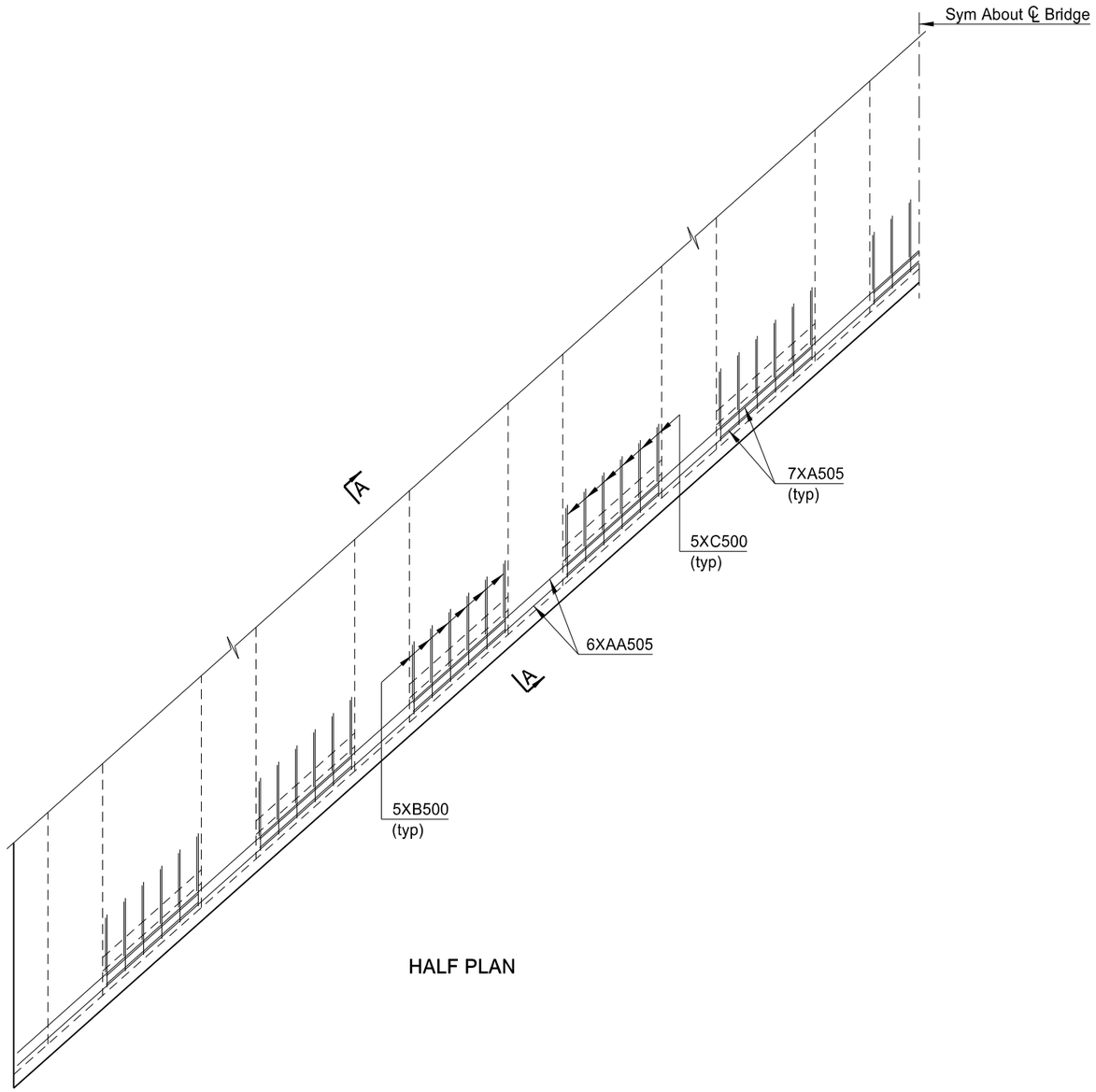

HALF PLAN

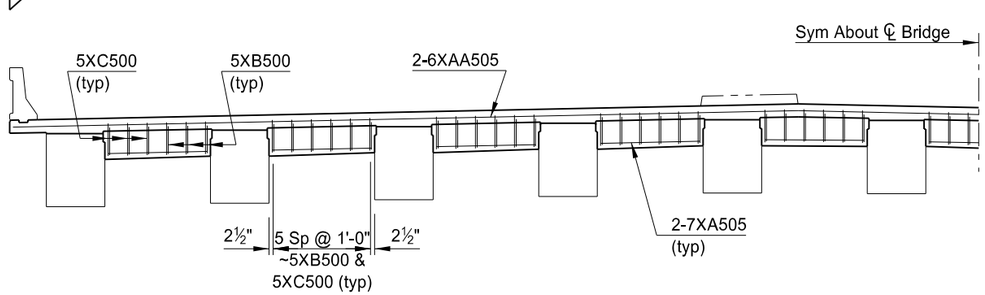

HALF ELEVATION

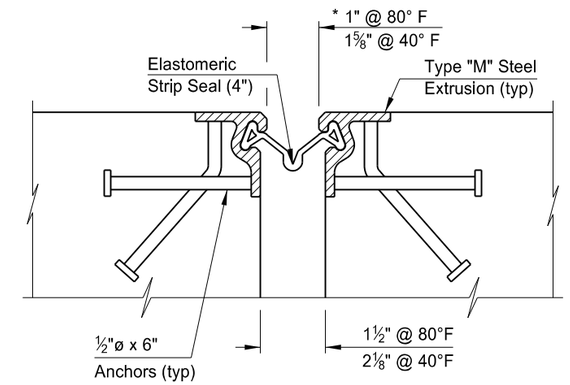

JOINT DETAIL

NOTES:

Strip seal extrustions shall be galvanized

* Temp Adjustment = -0.159 in/+10°F

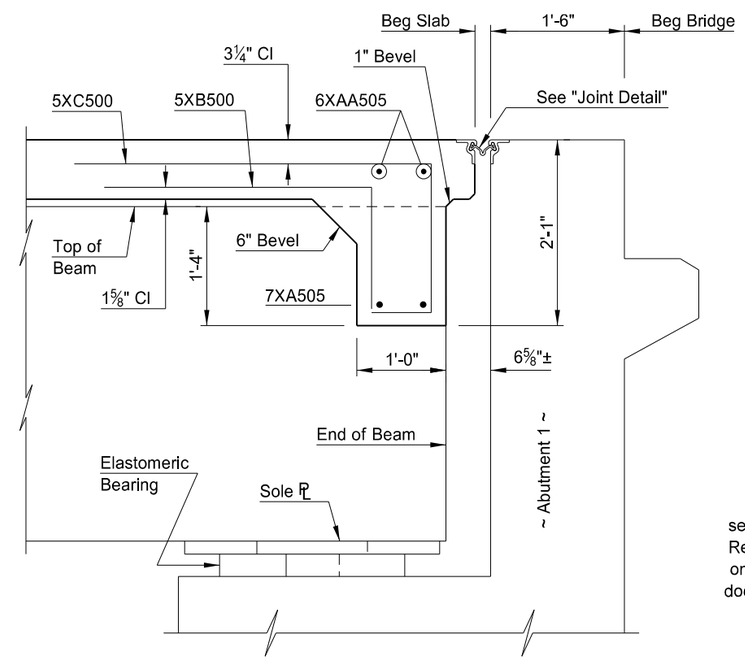

A-A

This document was originally issued and sealed by Ryan A. Rykowsky, Registration Number PE 6991, on 01/14/14 and the original document is stored at the North Dakota Department of Transportation

QUANTITIES

SEE DWG. SEE DWG. 2-019.458-35

US 2 & BISON DRIVE/18TH STREET
WILLISTON

(ABUTMENT 1)

END BEAM DETAILS

STATE	PROJECT NUMBER	SECTION NO.	SHEET NO.
ND	SOIA-7-002(130)019	170	34

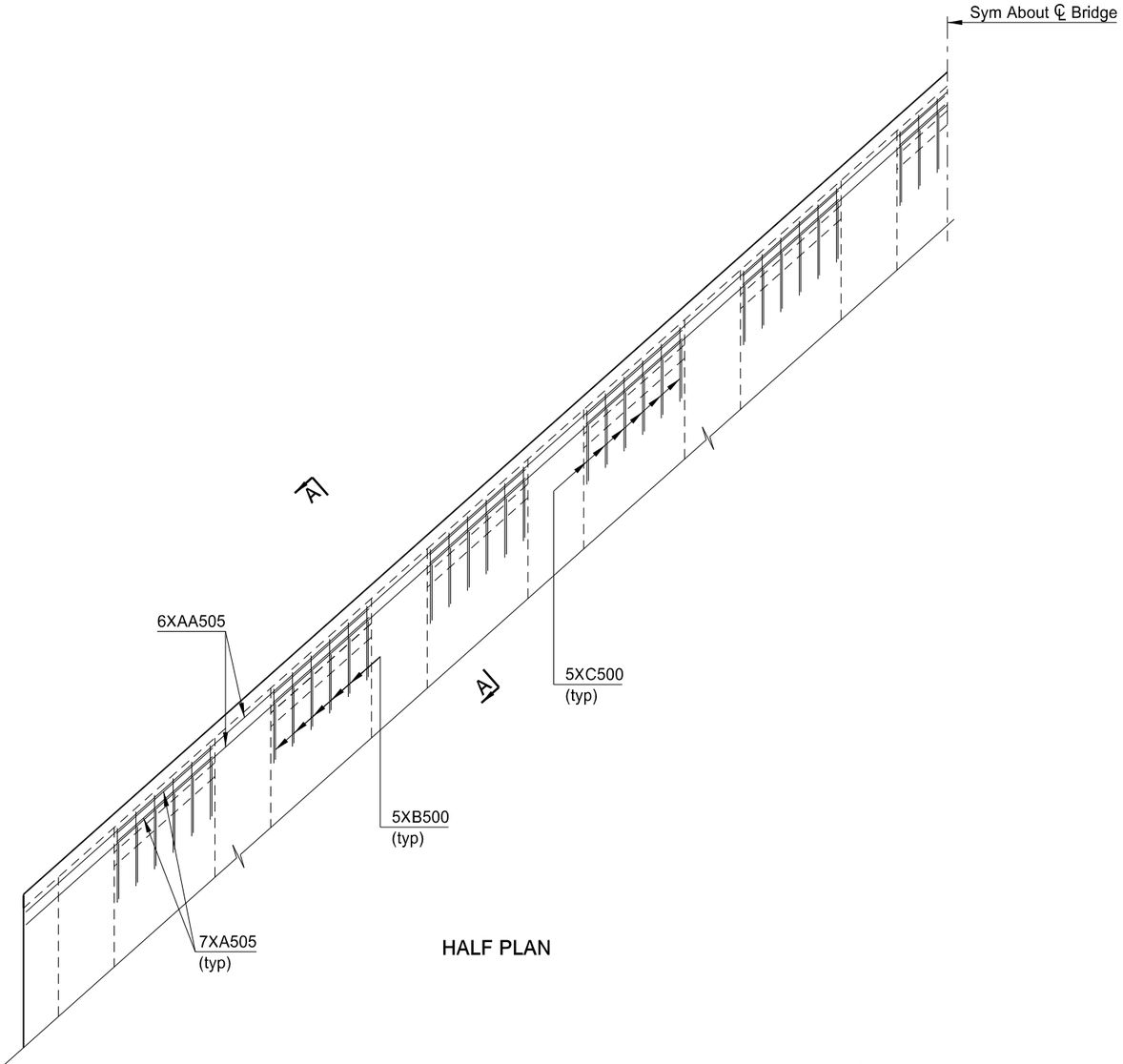

HALF PLAN

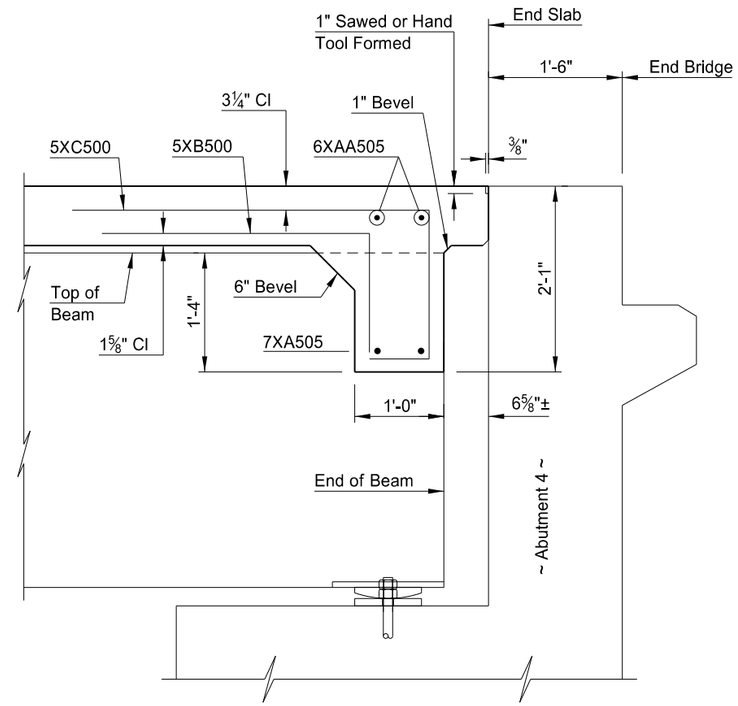

A-A

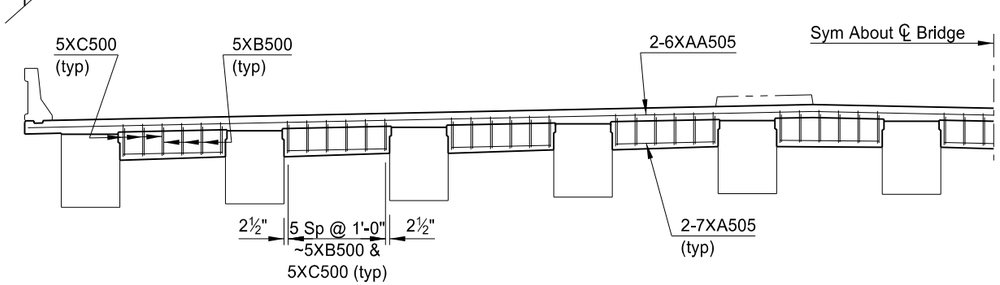

HALF ELEVATION

This document was originally issued and sealed by Ryan A. Rykowsky, Registration Number PE 6991, on 01/14/14 and the original document is stored at the North Dakota Department of Transportation

QUANTITIES

SEE DWG. 2-019.458-35

US 2 & BISON DRIVE/18TH STREET
WILLISTON

(ABUTMENT 4)

END BEAM DETAILS

STATE	PROJECT NUMBER	SECTION NO.	SHEET NO.
ND	SOIA-7-002(130)019	170	35

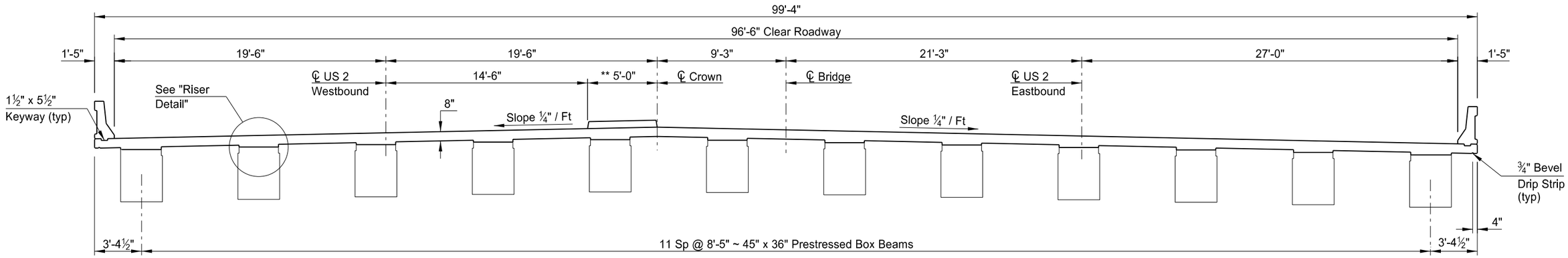

(SHOWING DIMENSIONS)

SLAB SECTION

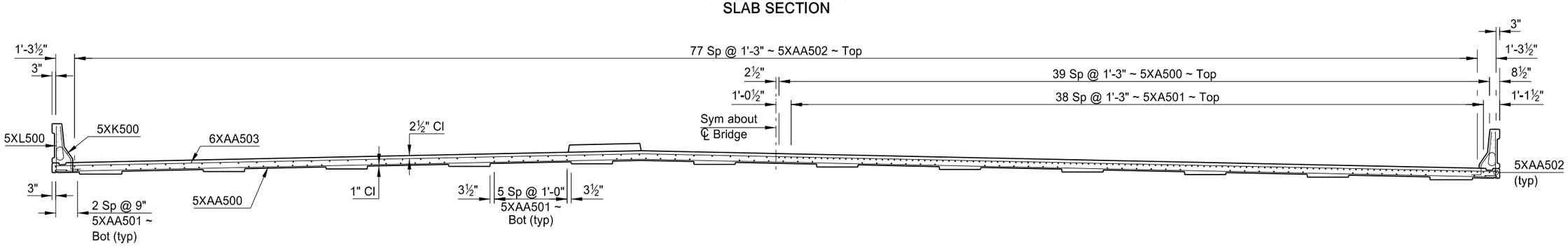

(SHOWING REINFORCING BETWEEN SUPPORTS)

(SHOWING REINFORCING OVER PIER)

SLAB SECTION

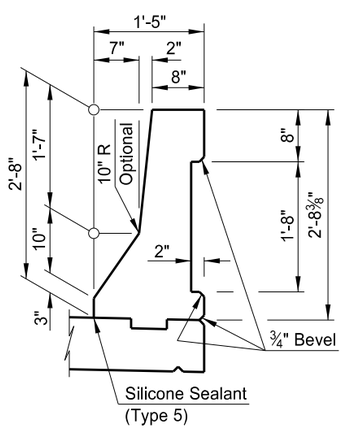

SHOWING DIMENSIONS

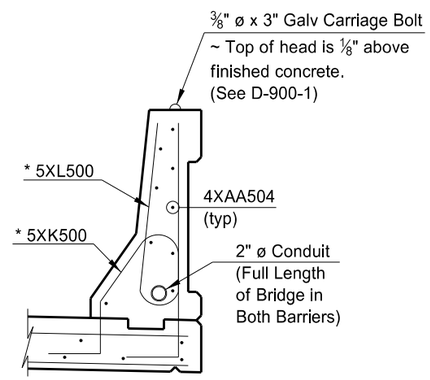

* Barrier reinforcing shall have a 1½" clearance from the front face.

SHOWING REINFORCING

BARRIER DETAIL

** Median width varies at the south end of the bridge See Dwg 2-019.458-1

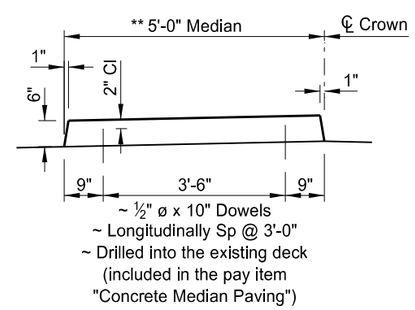

MEDIAN SECTION

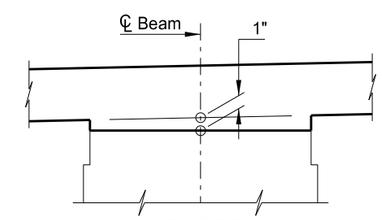

The 1" dimension shown is located at the supports. The anticipated midspan riser is 2" in Spans 1 & 2 and 1" in Span 3. The riser shall be adjusted to maintain the 8" slab thickness

RISER DETAIL

This document was originally issued and sealed by Ryan A. Rykowsky, Registration Number PE 6691, on 01/14/14 and the original document is stored at the North Dakota Department of Transportation

QUANTITIES	
CLASS AAE-3 CONCRETE	685.8 CY
REINFORCING STEEL	4804 LBS
REINFORCING STEEL (EPOXY)	138,256 LBS
CONCRETE MEDIAN PAVING	125.3 SY

US 2 & BISON DRIVE/18TH STREET
WILLISTON

SLAB SECTION

STATE	PROJECT NUMBER	SECTION NO.	SHEET NO.
ND	SOIA-7-002(130)019	170	36

BILL OF REINFORCING STEEL, GRADE 60

LETTER PREFIX OF BAR MARK DENOTES SHAPE ~ SEE BAR DETAILS

LOCATION		SIZE	MARK	NO. EACH /SET	NOMINAL LENGTH	DETAILING DIMENSIONS a	b	c	d	e	f	g	h	k
ABUTMENT 1	REGULAR	6	A100	22	15'-0"		15'-0"							
		6	A101	22	19'-4"		19'-4"							
		5	A102	50	10'-7"		10'-7"							
		5	A103	37	23'-8"		23'-8"							
		5	A104	51	9'-10"		9'-10"							
		5	A105	12	25'-5"		25'-5"							
		5	A106	1	24'-6"		24'-6"							
		5	A107	2	9'-8"		9'-8"							
		6	B100	268	8'-8"		7'-8"	1'-0"						
		7	B101	41	7'-3"		6'-1"	1'-2"						
		5	B102	40	5'-10"		5'-0"	10"						
		5	C100	129	10'-8"		3'-0"	4'-8"	3'-0"					
		5	C101	50	4'-8"		1'-6"	1'-8"	1'-6"					
		5	C102	20	6'-10"		3'-0"	10"	3'-0"					
		5	C103	4	9'-3"		3'-0"	3'-3"	3'-0"					
		6	D100	2	12'-11"		4'-9"	8'-2"					12	10.7
		5	D101	19	8'-6"		5'-6"	3'-0"					10.7	12
		6	V100	336	11'-2"		9'-2"	1'-0"			2.25"			
		5	W100	12	9'-7"		2'-0"	4'-7"	3'-0"				12	10.7
		5	W101	7	6'-7"		3'-0"	1'-7"	2'-0"				12	10.7
		6	AA100	24	153'-0"		60'-0"	3'-6"	33'-0"	2		146'-0"		
		6	AA101	28	139'-6"		60'-0"	3'-6"	19'-6"	2		132'-6"		
		6	SV100	2	34'-6"	4'-11"	8'-4"	1'-0"		3	2.25"			
	EPOXY	6	XA100	133	9'-9"		9'-9"							
		6	XA101	133	7'-0"		7'-0"							
		5	XB100	133	6'-0"		2'-0"	4'-0"						
		5	XC100	132	2'-2"		6"	1'-2"	6"					
		5	XK100	4	4'-11"	1'-4"	8"	11"	8"	1'-0"	2.5"	8"	8.5	12
		5	XL100	4	5'-0"	3"	2'-2"	8"	2'-2"		2.5"		1.25	12
		5	XP100	133	5'-3"	5"	2'-0"	2'-0"			1.25	10"	12	6.5
		5	XAA100	5	139'-6"		60'-0"	3'-6"	19'-6"	2		132'-6"		

LOCATION		SIZE	MARK	NO. EACH /SET	NOMINAL LENGTH	DETAILING DIMENSIONS a	b	c	d	e	f	g	h	k
ABUTMENT 4	REGULAR	6	A400	22	15'-0"		15'-0"							
		6	A401	22	19'-4"		19'-4"							
		5	A402	51	8'-0"		8'-0"							
		5	A403	35	23'-8"		23'-8"							
		5	A404	50	10'-2"		10'-2"							
		5	A405	10	25'-5"		25'-5"							
		5	A406	1	24'-6"		24'-6"							
		5	A407	2	9'-2"		9'-2"							
		6	B400	268	7'-0"		6'-0"	1'-0"						
		7	B401	41	7'-3"		6'-1"	1'-2"						
		5	B402	40	5'-10"		5'-0"	10"						
		5	C400	129	12'-11"		4'-0"	4'-11"	4'-0"					
		5	C401	50	4'-8"		1'-6"	1'-8"	1'-6"					
		6	D400	2	12'-11"		4'-9"	8'-2"					12	10.7
		5	D401	16	8'-6"		5'-6"	3'-0"					10.7	12
		6	V400	336	11'-2"		9'-2"	1'-0"			2.25"			
		5	W400	11	9'-7"		2'-0"	4'-7"	3'-0"				12	10.7
		5	W401	7	6'-7"		3'-0"	1'-7"	2'-0"				12	10.7
		6	AA400	24	153'-0"		60'-0"	3'-6"	33'-0"	2		146'-0"		
		6	AA401	26	139'-6"		60'-0"	3'-6"	19'-6"	2		132'-6"		
		6	SV400	2	34'-6"	4'-11"	8'-4"	1'-0"		3	2.25"			
	EPOXY	6	XA400	101	9'-4"		9'-4"							
		6	XA401	32	8'-3"		8'-3"							
		6	XA402	133	7'-0"		7'-0"							
		5	XB400	133	6'-0"		2'-0"	4'-0"						
		5	XC400	132	2'-2"		6"	1'-2"	6"					
		5	XK400	4	4'-11"	1'-4"	8"	11"	8"	1'-0"	2.5"	8"	8.5	12
		5	XL400	4	5'-0"	3"	2'-2"	8"	2'-2"		2.5"		1.25	12
		5	XP400	133	5'-3"	5"	2'-0"	2'-0"			1.25	10"	12	6.5
		5	XAA400	5	139'-6"		60'-0"	3'-6"	19'-6"	2		132'-6"		

NOTES:

1. Fabrication and tolerances shall be inaccordance with the CRSI Manual of Standard Practice.
2. All dimensions are out to out of bars.
3. Nominal length of each bent bar or cut bar is the sum total of the detailing dimensions for that bar, unless otherwise noted.
4. Adjacent "AA" bars shall be turned end for end so that the splice locations are staggered.
5. The "f" dimension indicates the inside radius unless otherwise noted.
6. An "X" preceding a bar designation indicates an epoxy coated bar.

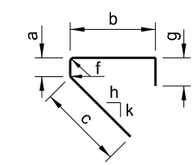

P

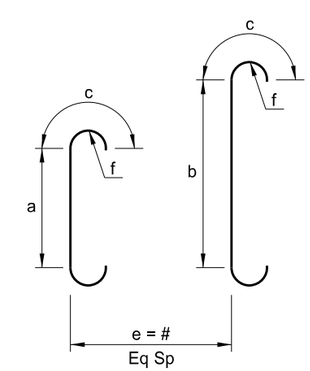

SV

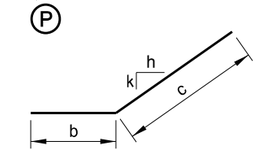

D

This document was originally issued and sealed by Ryan A. Rykowsky, Registration Number PE 6691, on 01/14/14 and the original document is stored at the North Dakota Department of Transportation

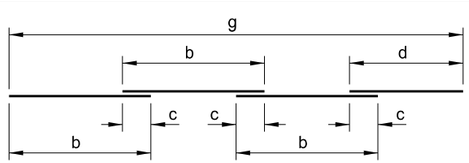

c = Lap Splice (typ)
e = # of "b" Length Pieces in a Set
Total Length per Set = e x b + d

AA

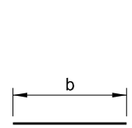

A

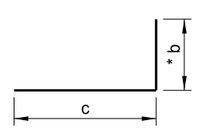

B

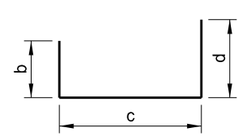

C

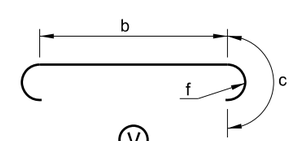

V

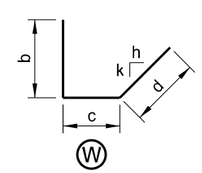

W

* b = Vertical Leg

US 2 & BISON DRIVE/18TH STREET
WILLISTON

REINFORCING BAR LIST & DETAILS

STATE	PROJECT NUMBER	SECTION NO.	SHEET NO.
ND	SOIA-7-002(130)019	170	37

BILL OF REINFORCING STEEL, GRADE 60

LETTER PREFIX OF BAR MARK DENOTES SHAPE ~ SEE BAR DETAILS

LOCATION	SIZE	MARK	NO. EACH /SET	NOMINAL LENGTH	DETAILING DIMENSIONS a	b	c	d	e	f	g	h	k
PIER 2 REGULAR	8	A200	160	8'-0"		8'-0"							
	9	A201	176	9'-6"		9'-6"							
	5	A202	16	5'-6"		5'-6"							
	5	A203	4	10'-5"		10'-5"							
	5	A204	12	11'-6"		11'-6"							
	5	A205	2	42'-0"		42'-0"							
	6	B200	160	22'-2"		1'-2"	21'-0"						
	5	C200	432	8'-1"		3'-2"	1'-9"	3'-2"					
	6	C201	28	9'-3"		3'-9"	1'-9"	3'-9"					
	6	C202	28	8'-9"		3'-6"	1'-9"	3'-6"					
	5	C203	122	9'-5"		3'-10"	1'-9"	3'-10"					
	5	C204	26	10'-1"		4'-2"	1'-9"	4'-2"					
	5	C205	13	9'-0"		3'-3"	2'-6"	3'-3"					
	5	C206	20	6'-10"		3'-0"	10"	3'-0"					
	5	C207	4	8'-7"		3'-0"	2'-7"	3'-0"					
	5	N200	136	11'-0"	2'-6"	2'-6"	6"					0	12
	7	Q200	84	20'-9"	2'-9"	15'-3"	2'-9"	1'-1"		26'-9"			
	5	T200	12	6'-0"	3'-3"	2'-9"		1'-1"		5'-9"			
	5	U200	272	3'-6"	6"	2'-6"	5.5"			1.25			
	5	AA200	10	135'-2"		60'-0"	1'-9"	15'-2"	2	131'-8"			
	5	AA201	2	103'-6"		60'-0"	1'-9"	43'-6"	1	101'-9"			
	9	AA202	5	145'-2"		60'-0"	6'-9"	25'-2"	2	131'-8"			

LOCATION	SIZE	MARK	NO. EACH /SET	NOMINAL LENGTH	DETAILING DIMENSIONS a	b	c	d	e	f	g	h	k
PIER 3 REGULAR	8	A300	160	8'-0"		8'-0"							
	9	A301	176	9'-6"		9'-6"							
	5	A302	16	5'-6"		5'-6"							
	5	A303	4	10'-5"		10'-5"							
	5	A304	12	11'-6"		11'-6"							
	5	A305	2	48'-0"		48'-0"							
	6	B300	160	20'-8"		1'-2"	19'-6"						
	5	C300	380	8'-5"		3'-4"	1'-9"	3'-4"					
	6	C301	28	10'-3"		4'-3"	1'-9"	4'-3"					
	6	C302	28	9'-3"		3'-9"	1'-9"	3'-9"					
	5	C303	38	9'-5"		3'-10"	1'-9"	3'-10"					
	5	C304	98	10'-5"		4'-4"	1'-9"	4'-4"					
	5	C305	64	11'-5"		4'-10"	1'-9"	4'-10"					
	5	C306	16	9'-0"		3'-3"	2'-6"	3'-3"					
	5	C307	20	6'-10"		3'-0"	10"	3'-0"					
	5	C308	4	8'-7"		3'-0"	2'-7"	3'-0"					
	5	N300	120	11'-0"	2'-6"	2'-6"	6"					0	12
	7	Q300	84	20'-9"	2'-9"	15'-3"	2'-9"	1'-1"		26'-9"			
	5	T300	12	6'-0"	3'-3"	2'-9"		1'-1"		5'-9"			
	5	U300	240	3'-6"	6"	2'-6"	5.5"			1.25			
	5	AA300	10	135'-2"		60'-0"	1'-9"	15'-2"	2	131'-8"			
	5	AA301	2	115'-6"		60'-0"	1'-9"	55'-6"	1	113'-9"			
	5	AA302	2	97'-6"		60'-0"	1'-9"	37'-6"	1	95'-9"			
	5	AA303	2	79'-6"		60'-0"	1'-9"	19'-6"	1	77'-9"			
	9	AA304	5	145'-2"		60'-0"	6'-9"	25'-2"	2	131'-8"			

NOTES:

1. Fabrication and tolerances shall be in accordance with the CRSI Manual of Standard Practice.
2. All dimensions are out to out of bars.
3. Nominal length of each bent bar or cut bar is the sum total of the detailing dimensions for that bar, unless otherwise noted.
4. Adjacent "AA" bars shall be turned end for end so that the splice locations are staggered.
5. The "f" dimension indicates the inside radius unless otherwise noted.
6. An "X" preceding a bar designation indicates an epoxy coated bar.

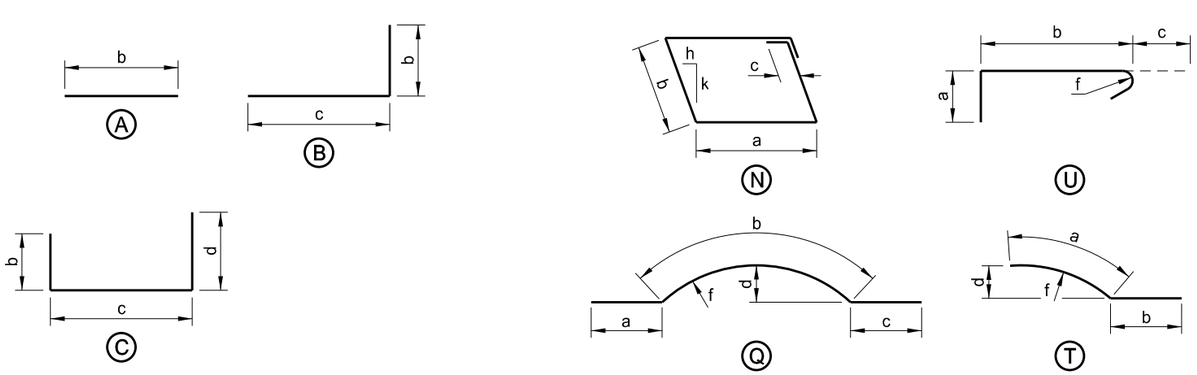

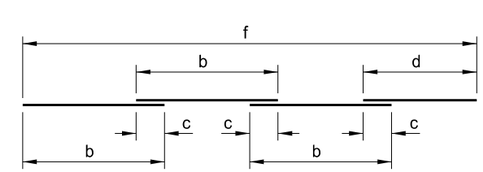

c = Lap Splice (typ)
e = # of "b" Length Pieces in a Set
Total Length per Set = e x b + d

AA

This document was originally issued and sealed by Ryan A. Rykowsky, Registration Number PE 6691, on 01/14/14 and the original document is stored at the North Dakota Department of Transportation

US 2 & BISON DRIVE/18TH STREET
WILLISTON

REINFORCING BAR LIST & DETAILS

STATE	PROJECT NUMBER	SECTION NO.	SHEET NO.
ND	SOIA-7-002(130)019	170	38

BILL OF REINFORCING STEEL, GRADE 60

LETTER PREFIX OF BAR MARK DENOTES SHAPE ~ SEE BAR DETAILS

LOCATION		SIZE	MARK	NO. EACH /SET	NOMINAL LENGTH	DETAILING DIMENSIONS a	b	c	d	e	f	g	h	k	m
SUPERSTRUCTURE	REGULAR	4	A500	132	6'-11"		6'-11"								
		6	A501	66	6'-11"		6'-11"								
		6	AA500	16	130'-8"		60'-0"	1'-6"	10'-8"	2		127'-8"			
		6	AA501	2	122'-7"		50'-0"	1'-6"	22'-7"	2		119'-7"			
	EPOXY	5	XA500	158	30'-6"		30'-6"								
		5	XA501	158	16'-0"		16'-0"								
		6	XA502	28	6'-6"		6'-6"								
		6	XA503	4	2'-9"		2'-9"								
		6	XA504	4	4'-3"		4'-3"								
		7	XA505	44	6'-9"		6'-9"								
		5	XB500	132	4'-5"		1'-5"	3'-0"							
		5	XC500	132	6'-7"		11"	1'-8"	4'-0"						
		4	XG500	132	12'-1"	3'-11"	2'-3"	3'-11"	1'-0"				12	0	
		4	XG501	66	9'-11"	3'-8"	7"	3'-8"	1'-0"				12	0	
		5	XH500	4	8'-7"	1'-0"	2'-6"	1'-7"					12	12	
		5	XK500	664	4'-11"	1'-4"	8"	11"	8"	1'-0"	2.5"	8"	8.5	12	
		5	XL500	664	5'-0"	3"	2'-2"	8"	2'-2"		2.5"		1.25	12	
		5	XT500	6	5'-8"		8"	2'-4"	1'-0"						
		5	XSA500	2	2253'-2"	7"	59'-6"			74					
		6	XSA501	2	2284'-5"	1'-0"	59'-11"			74					
		5	XAA500	187	101'-6"		60'-0"	2'-6"	41'-6"	1		99'-0"			
		5	XAA501	72	228'-0"		60'-0"	2'-6"	48'-0"	3		220'-6"			
		5	XAA502	80	226'-6"		60'-0"	2'-0"	46'-6"	3		220'-6"			
		6	XAA503	186	101'-6"		60'-0"	2'-6"	41'-6"	1		99'-0"			
		4	XAA504	18	225'-0"		60'-0"	1'-6"	45'-0"	3		220'-6"			
		6	XAA505	4	137'-0"		60'-0"	2'-3"	17'-0"	2		132'-6"			
		5	XSAA500	2	4013'-11"	7'-10"	55'-0"	2'-6"	46'-0"	1	48	98'-6"	1		60'-4"
		6	XSAA501	2	4020'-1"	7'-11"	55'-0"	2'-3"	46'-2"	1	48	98'-11"	1		60'-8"

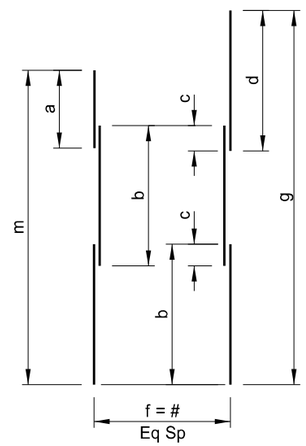

c = Lap Splice (typ)
e = No. of "b" Length Pieces in the "g" Set
h = No. of "b" Length Pieces in the "m" Set
Total Length per Set =
[(h x b + a) + (e x b + d)]/2 * (f + 1)

SAA

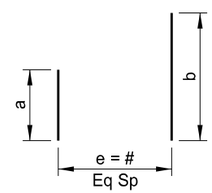

SA

NOTES:

1. Fabrication and tolerances shall be inaccordance with the CRSI Manual of Standard Practice.
2. All dimensions are out to out of bars.
3. Nominal length of each bent bar or cut bar is the sum total of the detailing dimensions for that bar, unless otherwise noted.
4. Adjacent "AA" bars shall be turned end for end so that the splice locations are staggered.
5. The "f" dimension indicates the inside radius unless otherwise noted.
6. An "X" preceding a bar designation indicates an epoxy coated bar.

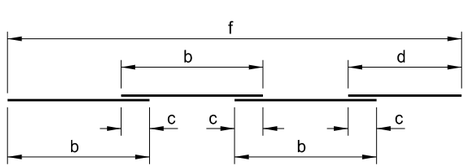

c = Lap Splice (typ)
e = # of "b" Length Pieces in a Set
Total Length per Set = e x b + d

AA

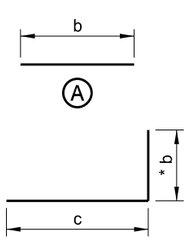

A

B

* b = Vertical Leg

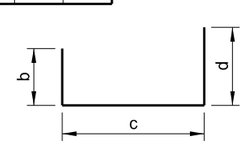

C

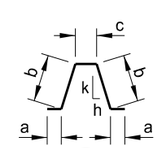

H

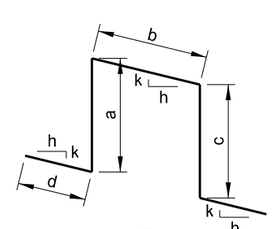

G

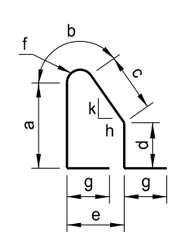

K

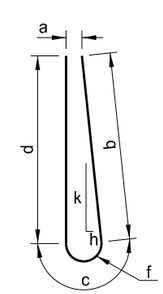

L

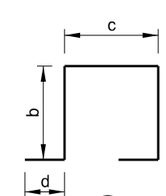

T

This document was originally issued and sealed by Ryan A. Rykowsky, Registration Number PE 6691, on 01/14/14 and the original document is stored at the North Dakota Department of Transportation

US 2 & BISON DRIVE/18TH STREET
WILLISTON

REINFORCING BAR LIST & DETAILS

STATE	PROJECT NUMBER	SECTION NO.	SHEET NO.
ND	SOIA-7-002(130)019	170	39

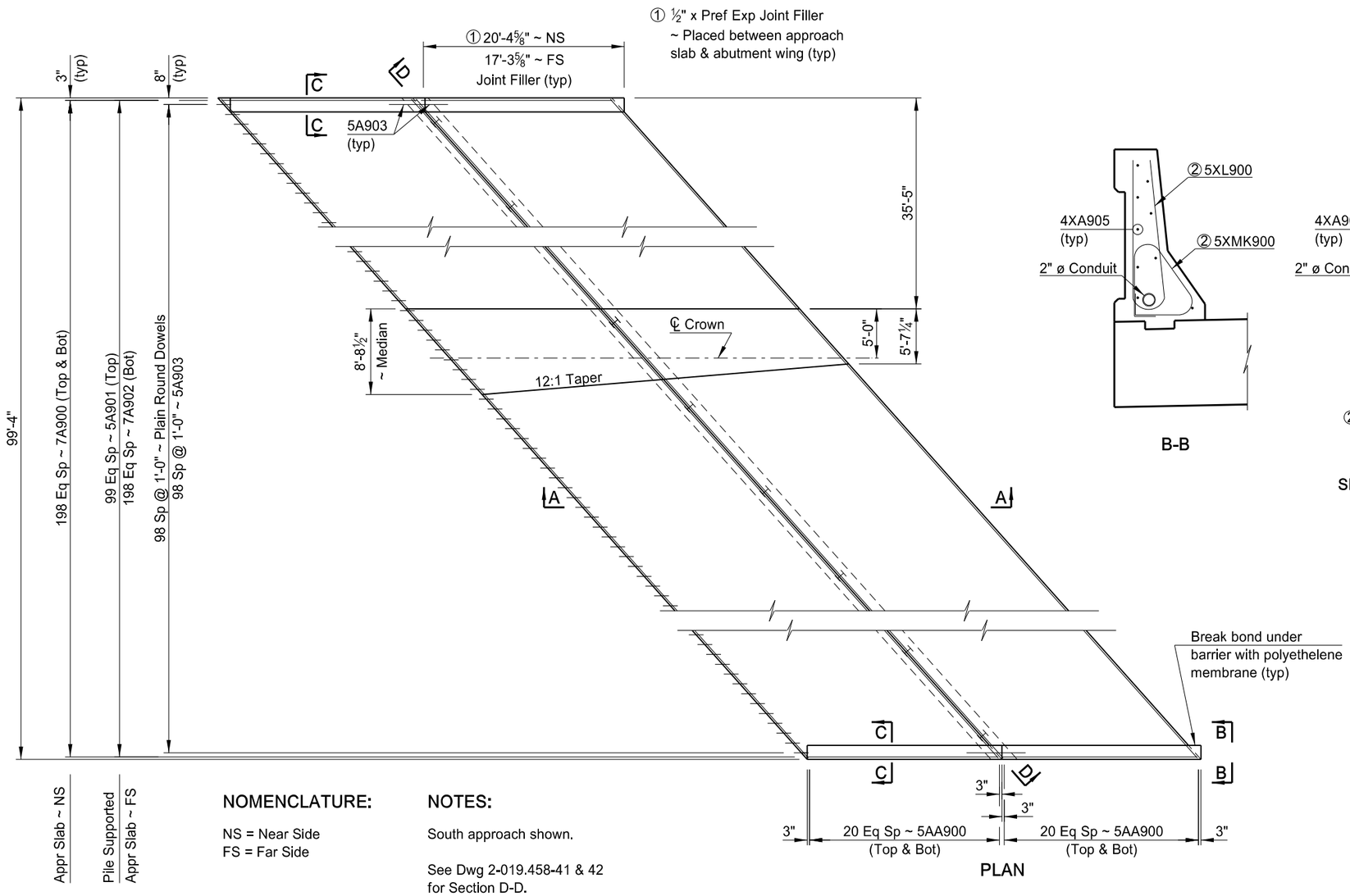

PLAN

B-B

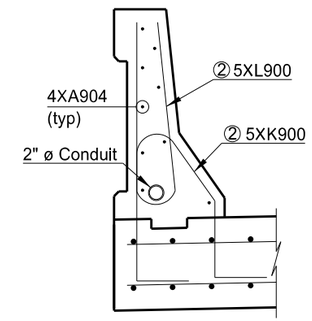

② Barrier reinforcing shall have a 1½" clearance from the front face

SHOWING REINFORCING

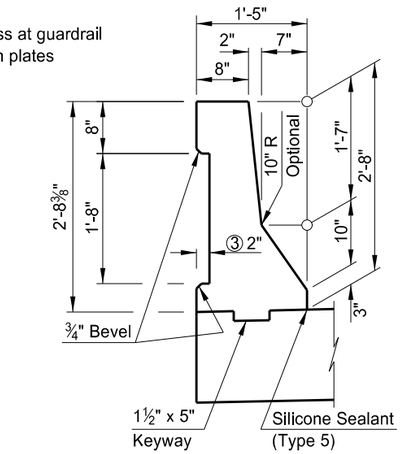

SHOWING DIMENSIONS

C-C

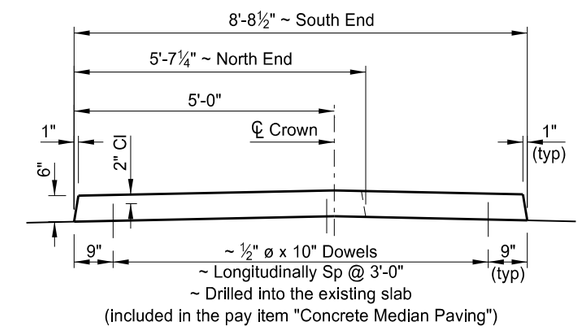

(END VIEW)

MEDIAN SECTION

NOMENCLATURE:

NS = Near Side
FS = Far Side

NOTES:

South approach shown.

See Dwg 2-019.458-41 & 42 for Section D-D.

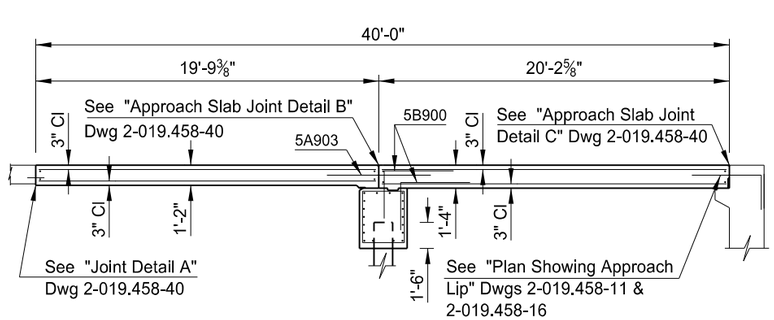

A-A

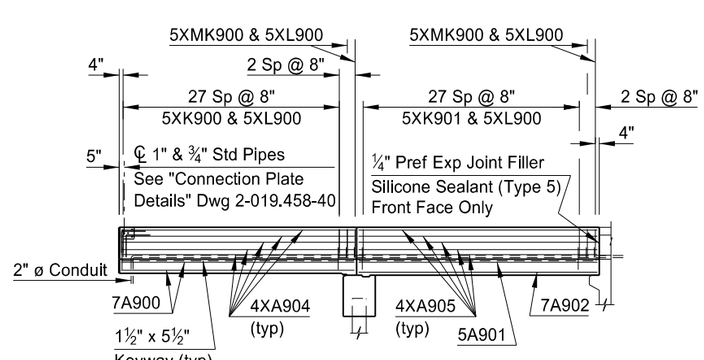

ELEVATION

This document was originally issued and sealed by Ryan A. Rykowsky, Registration Number PE 6691, on 01/14/14 and the original document is stored at the North Dakota Department of Transportation

QUANTITIES

SEE DWGS 2-019.458-41 & 42

US 2 & BISON DRIVE/18TH STREET
WILLISTON

(BOTH ENDS)

APPROACH SLAB DETAILS

STATE	PROJECT NUMBER	SECTION NO.	SHEET NO.
ND	SOIA-7-002(130)019	170	40

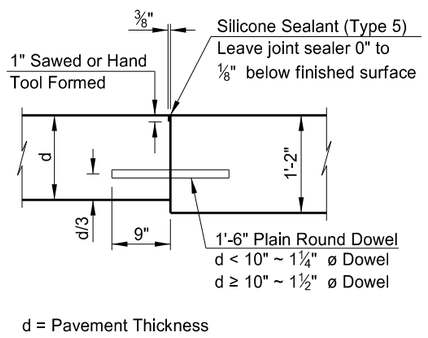

JOINT DETAIL A

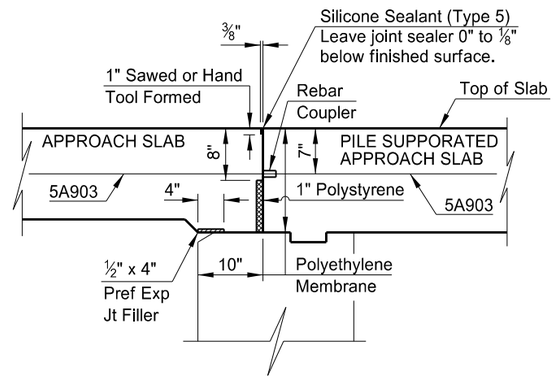

APPROACH SLAB JOINT DETAIL B

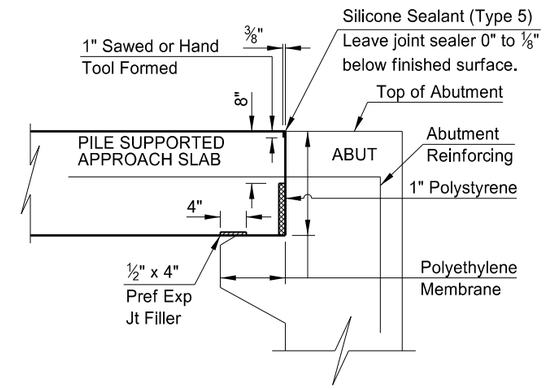

APPROACH SLAB JOINT DETAIL C

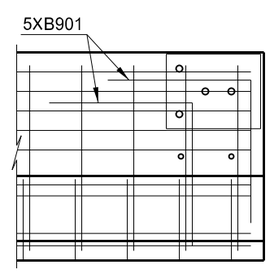

SHOWING REINFORCING

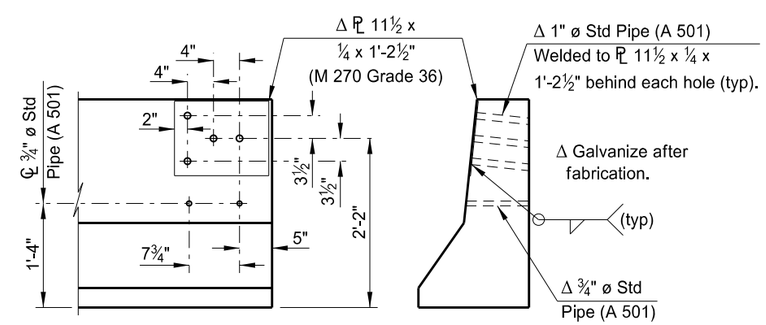

SHOWING DIMENSIONS

(SHOWING FRONT FACE)

CONNECTION PLATE DETAILS

SE & NW CORNER

This document was originally issued and sealed by Ryan A. Rykowsky, Registration Number PE 6691, on 01/14/14 and the original document is stored at the North Dakota Department of Transportation

QUANTITIES

SEE DWGS 2-019.458-41 & 42

US 2 & BISON DRIVE/18TH STREET
WILLISTON

(BOTH ENDS)

APPROACH SLAB DETAILS

STATE	PROJECT NUMBER	SECTION NO.	SHEET NO.
ND	SOIA-7-002(130)019	170	41

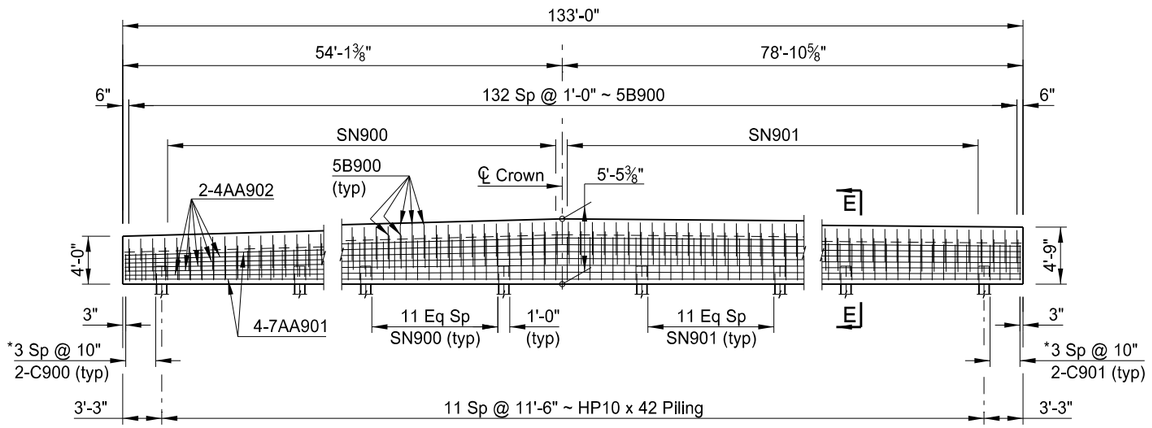

D-D

* Fan bars on skewed end

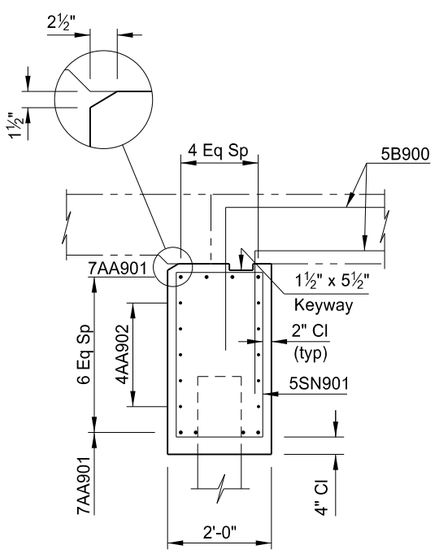

E-E

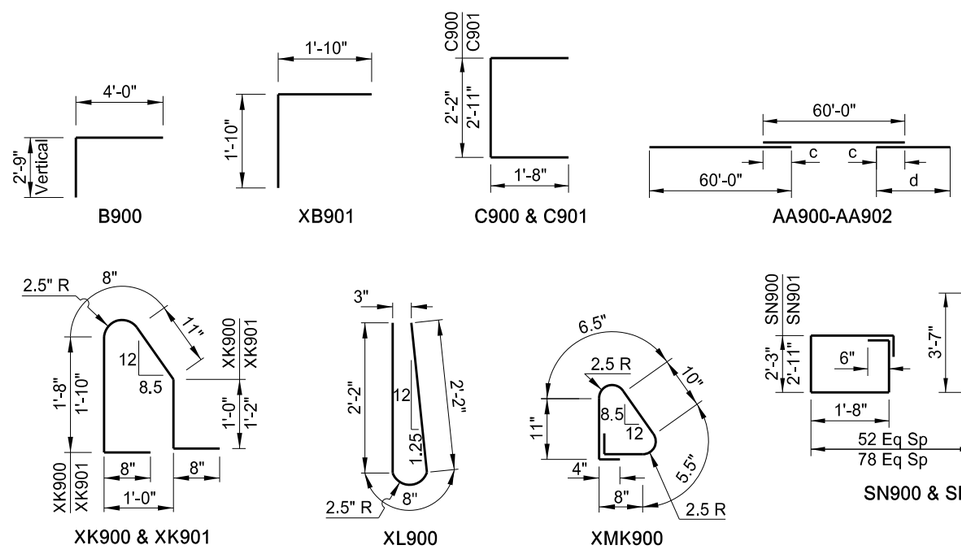

BENT BAR DETAILS

NOTES:

The estimated material quantities shown are for information purposes only. All materials including concrete, reinforcing bars, polyethylene membrane, preformed joint filler, polystyrene, silicone sealant, connection plates and pipes, and all labor required to build the approach slabs and barriers shall be included in the pay items " Concrete Bridge Approach Slab" & "Pile Supported Approach Slab." The concrete shall be Class AE-3 and the reinforcing steel shall be Grade 60. The polystyrene membrane shall meet the requirements of AASHTO M 171.

Surface Finish "D" shall be required for all surfaces of the approach slab barriers.

The bar marks beginning with an "X" indicate an epoxy coated bar. The dimensions shown in the "Bent Bar Details" are out to out. Adjacent "AA" bars shall be turned end for end so that the splice locations are staggered. A designation shall be added to the bar marks to differentiate between the north and south approach slabs.

SKEW ANGLE = 41°40'37.5"

BAR LIST - ONE SLAB

SIZE	MARK	NO.	LENGTH
7	A900	398	19'-5"
5	A901	100	19'-10"
7	A902	199	19'-10"
5	A903	198	3'-0"
4	XA904	18	19'-5"
4	XA905	18	19'-10"
5	B900	266	6'-9"
5	XB901	2	3'-8"
5	C900	8	5'-6"
5	C901	8	6'-3"
5	XK900	56	5'-7"
5	XK901	56	5'-11"
5	XL900	120	5'-0"
5	XMK900	8	4'-1"
5	SN900	1	538'-10"
5	SN901	1	855'-10"
5	AA900	84	136'-2"
7	AA901	8	140'-2"
4	AA902	10	135'-8"

c	d
1'-9"	16'-2"
3'-9"	20'-2"
1'-6"	15'-8"

ESTIMATED MATERIAL QUANTITIES

REINFORCING STEEL (LBS)	CONCRETE (CY)
46,916	227.1

QUANTITIES

CONCRETE BRIDGE APPROACH SLAB	218.3 SY
PILE SUPPORTED APPROACH SLAB	223.2 SY
CONCRETE MEDIAN PAVING	31.8 SY

This document was originally issued and sealed by Ryan A. Rykowsky, Registration Number PE 6691, on 01/14/14 and the original document is stored at the North Dakota Department of Transportation

US 2 & BISON DRIVE/18TH STREET
WILLISTON

(SOUTH APPROACH)

APPROACH SLAB DETAILS

STATE	PROJECT NUMBER	SECTION NO.	SHEET NO.
ND	SOIA-7-002(130)019	170	42

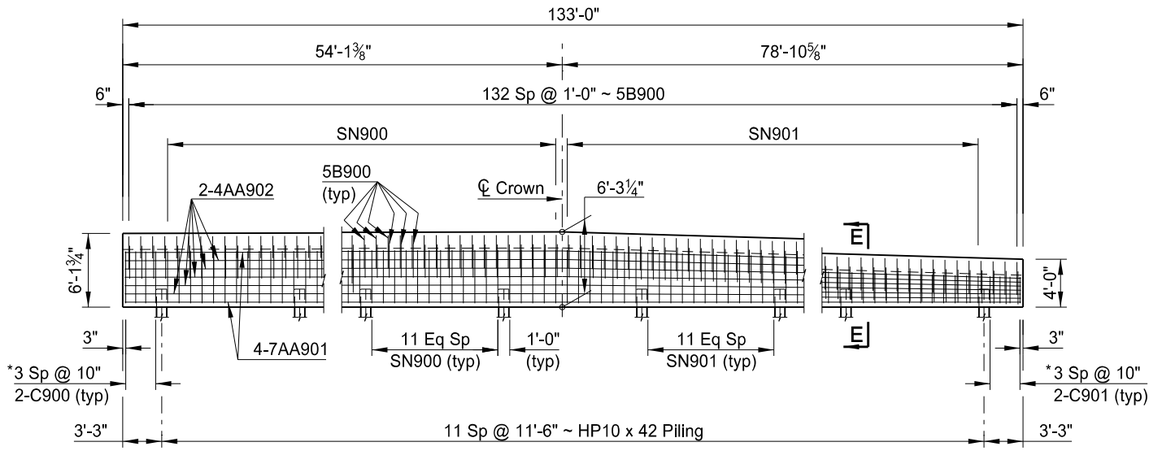

D-D

* Fan bars on skewed end

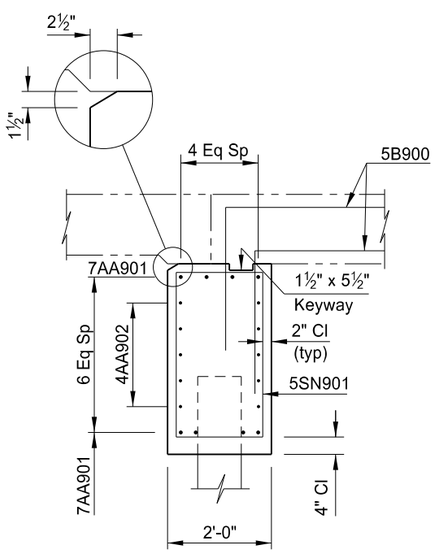

E-E

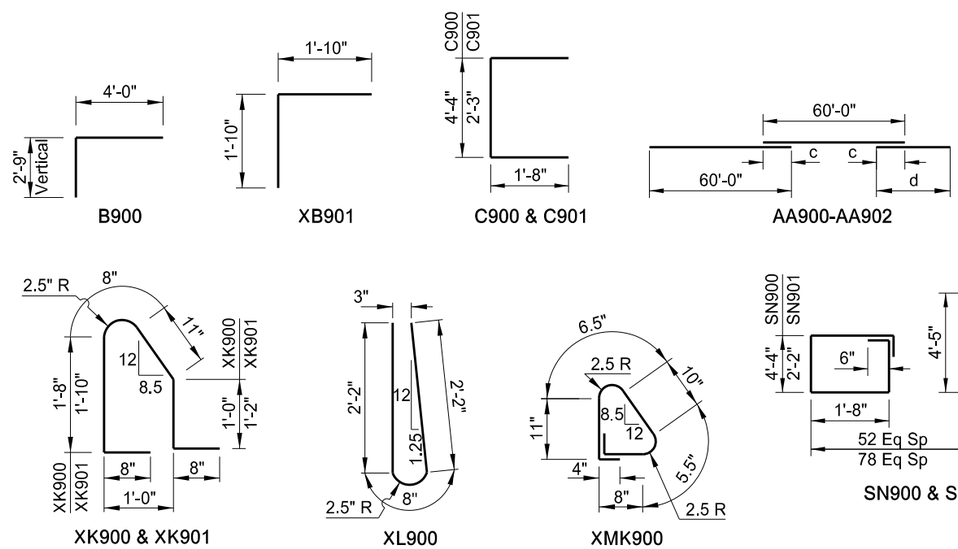

BENT BAR DETAILS

NOTES:

The estimated material quantities shown are for information purposes only. All materials including concrete, reinforcing bars, polyethylene membrane, preformed joint filler, polystyrene, silicone sealant, connection plates and pipes, and all labor required to build the approach slabs and barriers shall be included in the pay items " Concrete Bridge Approach Slab" & "Pile Supported Approach Slab." The concrete shall be Class AE-3 and the reinforcing steel shall be Grade 60. The polystyrene membrane shall meet the requirements of AASHTO M 171.

Surface Finish "D" shall be required for all surfaces of the approach slab barriers.

The bar marks beginning with an "X" indicate an epoxy coated bar. The dimensions shown in the "Bent Bar Details" are out to out. Adjacent "AA" bars shall be turned end for end so that the splice locations are staggered. A designation shall be added to the bar marks to differentiate between the north and south approach slabs.

SKEW ANGLE = 41°40'37.5"

BAR LIST - ONE SLAB

SIZE	MARK	NO.	LENGTH
7	A900	398	19'-5"
5	A901	100	19'-10"
7	A902	199	19'-10"
5	A903	198	3'-0"
4	XA904	18	19'-5"
4	XA905	18	19'-10"
5	B900	266	6'-9"
5	XB901	2	3'-8"
5	C900	8	7'-8"
5	C901	8	5'-7"
5	XK900	56	5'-7"
5	XK901	56	5'-11"
5	XL900	120	5'-0"
5	XMK900	8	4'-1"
5	SN900	1	693'-5"
5	SN901	1	862'-5"
5	AA900	84	136'-2"
7	AA901	8	140'-2"
4	AA902	10	135'-8"

c	d
1'-9"	16'-2"
3'-9"	20'-2"
1'-6"	15'-8"

ESTIMATED MATERIAL QUANTITIES

REINFORCING STEEL (LBS)	CONCRETE (CY)
47,096	233.4

QUANTITIES

CONCRETE BRIDGE APPROACH SLAB	218.3 SY
PILE SUPPORTED APPROACH SLAB	223.2 SY
CONCRETE MEDIAN PAVING	22.2 SY

This document was originally issued and sealed by Ryan A. Rykowsky, Registration Number PE 6691, on 01/14/14 and the original document is stored at the North Dakota Department of Transportation

US 2 & BISON DRIVE/18TH STREET
WILLISTON

(NORTH APPROACH)

APPROACH SLAB DETAILS

STATE	PROJECT NUMBER	SECTION NO.	SHEET NO.
ND	SOIA-7-002(130)019	175	1

Elev. feet	Depth feet	Symbol	Description of Materials (Soil-ASTM D2488 or D2487, Rock-USACE EM1110-1-2908)	BPF	WL	MC %	qp tsf	Tests or Notes
1915.8	0.0	FILL	FILL: Sandy Lean Clay, trace Organics and roots, brown, moist.	5		17		
				8		20		
1911.8	4.0	CL	SANDY LEAN CLAY, trace Gravel, brown, moist, rather soft to very stiff. (Glacial Till)	5		12		
				9		14	4 1/2	LL=37, PL=14, PI=23
				TW		14		MC=14%, WD=135pcf, DD=118pcf;
				12		16	3 1/2	Qu=4900psf
				13		17	3 1/4	
				11		18	2 3/4	WD=131pcf, DD=111pcf
				12		18	2 1/2	LL=40, PL=15, PI=25; P200=61.7%
				17		19	2 3/4	
1882.8	33.0	CLST	SENTINEL BUTTE FORMATION, CLAYSTONE, brown with iron-staining, moist, highly weathered, soft, very fine-grained, with Silt lenses, hand deformed sample classified as "Fat Clay (CH)".	14		28	4.5+	WD=119pcf, DD=93pcf
				13		25	4 1/2	LL=71, PL=22, PI=49
			-with Lignite interbeds below 45 feet.	13		30	4	
				15		33	4 1/2	
1862.8	53.0	SIS	SENTINEL BUTTE FORMATION, SILTSTONE, light brown, moist, highly weathered, very soft, fine-grained, a little Sand, with Lignite interbeds, hand deformed sample classified as "Silt (ML)". -CLAYSTONE layer at 55 feet.	39		10		LL=31, PL=19, PI=12, P200=71.0%
				40		17		
			-with Claystone interbeds below 63 feet.					

Elev. feet	Depth feet	Symbol	Description of Materials (Soil-ASTM D2488 or D2487, Rock-USACE EM1110-1-2908)	BPF	WL	MC %	qp tsf	Tests or Notes
1851.8	64.0		SENTINEL BUTTE FORMATION, SILTSTONE, light brown, moist, highly weathered, very soft, fine-grained, a little Sand, with Lignite interbeds, hand deformed sample classified as "Silt (ML)". (continued)	64		18		P200=89.1%
				37	▽	24		
1842.8	73.0	SS	SENTINEL BUTTE FORMATION, SANDSTONE, gray, waterbearing, highly weathered, very soft, fine- to medium-grained, Silty, with Lignite interbeds, sample retrieved as non-cemented "Silty Sand (SM).	56		11		P200=29.3%
1837.8	78.0	SIS	SENTINEL BUTTE FORMATION, SILTSTONE, brown and gray, moist, highly weathered, with Claystone interbeds, hand deformed sample classified as "Silt (ML)".	49		20		
1832.8	83.0	SS	SENTINEL BUTTE FORMATION, SANDSTONE, gray, waterbearing, highly weathered, very soft, fine- to medium-grained, with Lignite interbeds, sample retrieved as non-cemented "Poorly Graded Sand with Silt (SP-SM).	48		13		
				28		20		P200=11.9%
				35		21		
1814.8	101.0			36		16		
			END OF BORING.					
			Water observed at a depth of 80 feet while drilling.					
			Water observed at a depth of 85 feet with 99 1/2 feet of hollow-stem auger in the ground.					
			Water observed at a depth of 70 feet immediately after withdrawal of auger.					
			A piezometer with a screen depth interval of 50 to 70 feet was set in the borehole.					
			Boring then backfilled.					

BORING NO. 1

THE ENCIRCLED NUMBERS INDICATE THE NUMBER OF BLOWS DELIVERED BY A 140 LB. AUTOMATIC HAMMER FROM A HEIGHT OF 30 INCHES TO DRIVE A 2" O.D. SPLIT-BARREL SAMPLER 1 FOOT.

THE BORING DATA SHOWN IS FOR NORTH DAKOTA DEPARTMENT OF TRANSPORTATION (NDDOT) DESIGN AND ESTIMATING PURPOSES ONLY. THE BORING LOGS ARE ONLY REPRESENTATIVE OF THE EXACT LOCATION FROM WHICH THE SAMPLES WERE TAKEN AND INTERPRETATION BETWEEN SAMPLE LOCATIONS IS DISCOURAGED. THE NDDOT ASSUMES NO RESPONSIBILITY IF THE SOIL CONDITIONS ENCOUNTERED DURING CONSTRUCTION DIFFER FROM THOSE SHOWN. FURTHER SOIL INFORMATION MAY BE AVAILABLE AT:

NDDOT
MATERIALS & RESEARCH DIVISION
30 AIRPORT ROAD
BISMARCK, NORTH DAKOTA 58504-6005
PHONE (701)328-6900

q_u = Unconfined Compressive Strength (psf)
w = Moisture Content (%)
ø = Friction Angle (deg)
c = Cohesion (psf)
γ_d = Dry Density (pcf)
* = These cohesive values and friction angles are estimated from blow counts

This document was originally issued and sealed by Ryan A. Rykowsky, Registration Number PE 6691, on 12/12/13 and the original document is stored at the North Dakota Department of Transportation

US 2 & BISON DRIVE/18TH STREET
WILLISTON

SOIL BORINGS

STATE	PROJECT NUMBER	SECTION NO.	SHEET NO.
ND	SOIA-7-002(130)019	175	2

Elev. feet	Depth feet	Symbol	Description of Materials (Soil-ASTM D2488 or D2487, Rock-USACE EM1110-1-2908)	BPF	WL	MC %	qp tsf	Tests or Notes
1919.1	0.0							
1917.6	1.5	AGG	18 inches of Aggregate Base.	FA		25		
		FILL	FILL: Sandy Lean Clay, trace Organics, brown, moist.	6		15		
				7		16		
1910.1	9.0			6		13		
		CL	SANDY LEAN CLAY, a little Gravel, brown, moist, medium to stiff. (Glacial Till)	6		15		
			-with Sand lenses, medium-grained at 10 feet.	12		15	2 1/2	
				14		14	3 1/2	LL=39, PL=14, PI=25; P200=53.8%
				10		18	3	
				14		18	2 1/2	
				TW		18		MC=18%, WD=126pcf, DD=107pcf; Qu=2410psf
1886.1	33.0							
		CLST	SENTINEL BUTTE FORMATION, CLAYSTONE, brown with iron-staining, moist, highly weathered, soft, very fine-grained, with Silt lenses, hand deformed sample classified as "Fat Clay (CH)".	14		30	3 3/4	
				16		26	4 1/4	WD=119pcf, DD=95pcf
				15		28	3 1/2	LL=71, PL=21, PI=50; P200=99.1%
				16		25	3	
1866.1	53.0							
		CLST	SENTINEL BUTTE FORMATION, CLAYSTONE, light brown, damp, highly weathered, very soft, fine-grained, Sandy, with Lignite interbeds, hand deformed sample classified as "Sandy Lean Clay (CL)".	34		10		LL=29, PL=21, PI=8; P200=60.1%
				40		7		
1856.1	63.0							
		CLST						

Elev. feet	Depth feet	Symbol	Description of Materials (Soil-ASTM D2488 or D2487, Rock-USACE EM1110-1-2908)	BPF	WL	MC %	qp tsf	Tests or Notes
1855.1	64.0							
			SENTINEL BUTTE FORMATION, CLAYSTONE, gray with iron-staining, moist, highly weathered, soft, very fine-grained, with Lignite and Siltstone interbeds, hand deformed sample classified as "Fat Clay (CH)". (continued)	25		27		
				32	▽	25	4.5+	LL=63, PL=21, PI=42
1846.1	73.0							
		SIS	SENTINEL BUTTE FORMATION, SILTSTONE, gray, moist, highly weathered, soft, very fine-grained, Clayey, with Claystone interbeds, hand deformed sample classified as "Silt (ML)".	28		26		
				30		21		LL=34, PL=25, PI=9; P200=95.8%
				56		19		
1831.1	88.0							
		SS	SENTINEL BUTTE FORMATION, SANDSTONE, gray, waterbearing, highly weathered, very soft, fine- to medium-grained, Silty, with Lignite interbeds, sample retrieved as non-cemented "Silty Sand (SM).	31		18		P200=19.3%
				*		19		*86/9"
1818.1	101.0			57		14		
			END OF BORING.					
			Water observed at a depth of 78 feet while drilling.					
			Water observed at a depth of 70 feet with 99 1/2 feet of hollow-stem auger in the ground.					
			Water observed at a depth of 70 feet immediately after withdrawal of auger.					
			A piezometer with a screen depth interval of 50 to 60 feet was set in the borehole.					
			Boring then backfilled.					

BORING NO. 2

THE ENCIRCLED NUMBERS INDICATE THE NUMBER OF BLOWS DELIVERED BY A 140 LB. AUTOMATIC HAMMER FROM A HEIGHT OF 30 INCHES TO DRIVE A 2" O.D. SPLIT-BARREL SAMPLER 1 FOOT.

THE BORING DATA SHOWN IS FOR NORTH DAKOTA DEPARTMENT OF TRANSPORTATION (NDDOT) DESIGN AND ESTIMATING PURPOSES ONLY. THE BORING LOGS ARE ONLY REPRESENTATIVE OF THE EXACT LOCATION FROM WHICH THE SAMPLES WERE TAKEN AND INTERPRETATION BETWEEN SAMPLE LOCATIONS IS DISCOURAGED. THE NDDOT ASSUMES NO RESPONSIBILITY IF THE SOIL CONDITIONS ENCOUNTERED DURING CONSTRUCTION DIFFER FROM THOSE SHOWN. FURTHER SOIL INFORMATION MAY BE AVAILABLE AT:

NDDOT
MATERIALS & RESEARCH DIVISION
30 AIRPORT ROAD
BISMARCK, NORTH DAKOTA 58504-6005
PHONE (701)328-6900

q_u = Unconfined Compressive Strength (psf)
w = Moisture Content (%)
ø = Friction Angle (deg)
c = Cohesion (psf)
γ_d = Dry Density (pcf)
* = These cohesive values and friction angles are estimated from blow counts

This document was originally issued and sealed by Ryan A. Rykowsky, Registration Number PE 6691, on 12/12/13 and the original document is stored at the North Dakota Department of Transportation

US 2 & BISON DRIVE/18TH STREET
WILLISTON

SOIL BORINGS