DESIGN DATA				
Traffic	Average Daily			
Current 2012	Pass: N/A	Trucks: N/A	Total: N/A	
Forecast 2022	Pass: 26650	Trucks: 14350	Total: 41000	
Clear Zone Distance: 24' (55mph), 22' (45 mph)		Design Speed: 55, 45		
Minimum Sight Dist. for Stopping: 495' (55 mph), 360' (45 mph)				
Limited Access Control				
Pavement Design Life 30 (years)				
Design Accumulated One-way Rigid ESALs: 51,096,591				

STATE	PROJECT NO.	PCN	SECTION NO.	SHEET NO.
ND	SOIA-7-085(092)183	20208	1	1

JOB # 39
NORTH DAKOTA
DEPARTMENT OF TRANSPORTATION

SOIA-7-085(092)183
FHWA Non Involvement
Williams County
US 85 Intersection Improvements
from Near US 2 and US 85 JCT north to Jackson Street
Grading, Widening, Paving, Aggregate Base,
Drainage, Signals, Lighting, and
Incidentals

GOVERNING SPECIFICATIONS:
Standard Specifications adopted by the North Dakota Department of Transportation October 2008; Standard Drawings currently in effect; and other Contract Provisions submitted herein.

PROJECT NUMBER \ DESCRIPTION	NET MILES	GROSS MILES
SOIA-7-085(092)183	0.409	.409

LEGAL DESCRIPTION
SEC 19 T154N R101W
SEC 30 T154N R101W

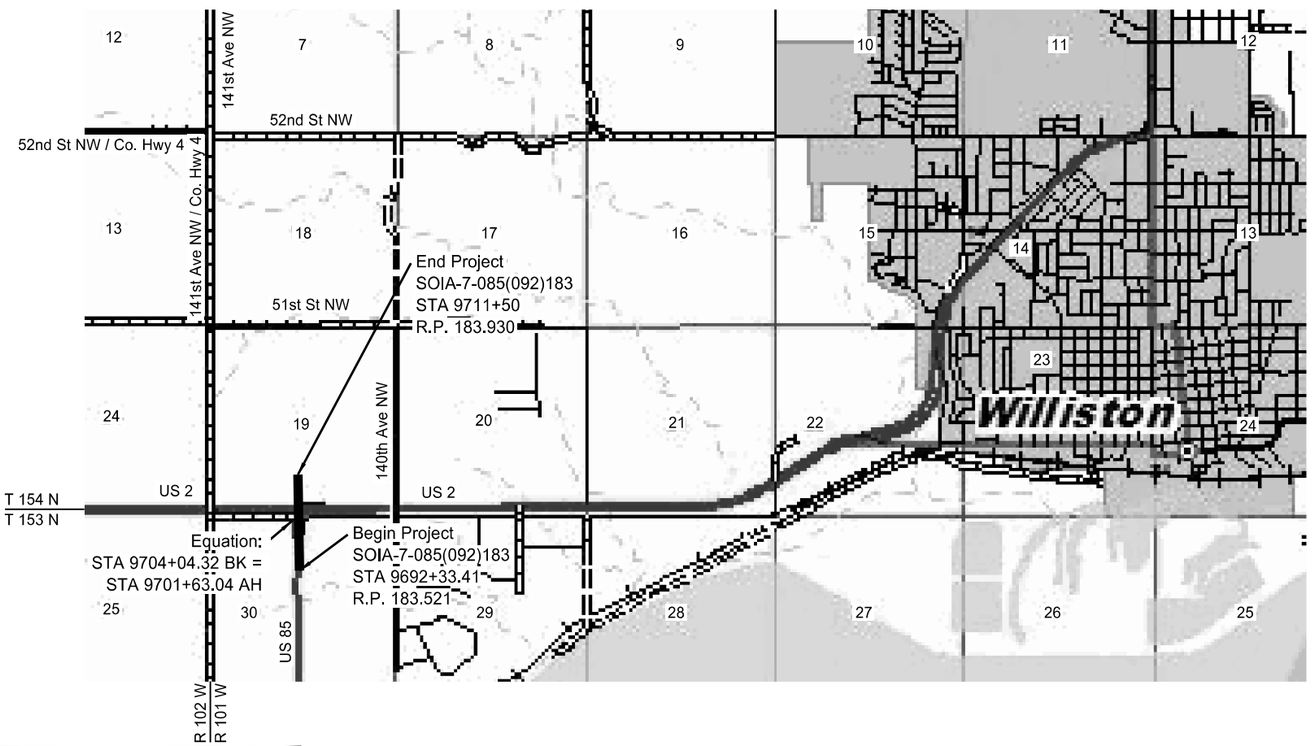

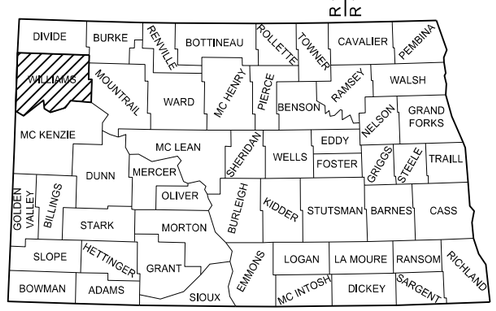

STATE COUNTY MAP

DESIGNERS
Erin Hunker, Georgina Stanley-Woidyla
Nicholas Erpelding, Steve McHenry
Jonathan Morgenroth
Melissa Zeis
Stacy Flaten

DISTRICT REVIEW
Joel M. Wilt /s/
WILLISTON DISTRICT
APPROVED DATE 30 Sept 13
Robert Fode /s/
OFFICE OF PROJECT DEVELOPMENT
ND DEPARTMENT OF TRANSPORTATION

I hereby certify that the attached plans were prepared by me or under my direct supervision and that I am a duly registered professional engineer under the laws of the state of ND.
APPROVED DATE 9/12/13
Eric Bach /s/
SRF CONSULTING GROUP, INC

This document was originally issued and sealed by Eric Bach, Registration Number PE- 5506, on 9/12/13 and the original document is stored at the North Dakota Department of Transportation

STATE	PROJECT NO.	SECTION NO.	SHEET NO.
ND	SOIA-7-085(092)183	2	1

TABLE OF CONTENTS

Section No.	Sheet No.	Description
1	1	Title Sheet
2	1	Table of Contents
2	2-3	List of Standard Drawings
4	1	Scope of Work
6	1-7	Notes
6	8	Environmental Commitments
8	1	Quantities
10	1-4	Basis of Estimate
11	1	Earthwork & Topsoil Summary
11	2-12	Earthwork Values
20	1	Approach Paving Details
20	2	Milling and Paving Transitions
20	3	Inlet Protection Device
20	4	Culvert Marker
20	5	Culvert End Protection
20	6	Jointing Details
20	7	Pavement Reinforcing at Pipe Locations
20	8	4” Curb Detail
20	9	Concrete Median Paving Detail
20	10	Edgedrain Detail
20	11	Discretionary Subcut Detail
20	12-13	Median Crossover Detail
20	14	Vehicle Gate Detail
20	15	Ditch Block Detail
20	16	Riprap at Pipe Outlets
20	17	Brokeback Culverts
20	18	Trash Guard Detail
20	19	Transition Slope Detail
30	1-4	Existing Typical Sections
30	5-10	Proposed Typical Sections
40	1-6	Removal Sheets
50	1	Culvert Hydraulic Data
50	2-3	Inlet & Manhole Summary
51	1-3	Allowable Pipe List
55	1-10	Drainage Layout
60	1-10	Plan & Profile Sheets
75	1-10	Erosion Control and Wetlands
80	1-8	Super Elevation Details
80	9-10	Fencing Layout
81	1-2	Survey Coordinate and Curve Data
81	3	Monuments, Iron Pins, and Right of Way Markers
82	1-4	Survey Data Layout
82	5-11	Survey Data Points
82	12	Elevation Data Points
90	1-8	Paving Layouts
100	1	Traffic Control Devices List
100	2-9	Work Zone Traffic Control Layout
100	10-12	Traffic Signal Removal
100	13-31	Interim Traffic Signal
110	1-3	Sign Summary
110	4-8	Signing Layout
110	9-14	Signing Details
120	1-5	Pavement Marking Layout
140	1-7	Lighting
150	1-15	Signals
150	16-17	Flashing Beacon
175	1	Soil Boring Logs
180	1	Pit Plat
180	2-4	Pit Logging by Test Holes
200	1-18	US Hwy 85 South of US Hwy 2
200	19-36	US Hwy 85 North of US Hwy 2
200	37-85	US Hwy 2 WB
200	86-140	US Hwy 2 EB

LIST OF SPECIAL PROVISIONS (SP)

SP #	Description
SP 1010(08)	Temporary Erosion and Sediment Best Management Practices
SP 1101(08)	Split Sampling and Testing Requirements for Aggregate Base
SP 1207(08)	Construction Monitoring and Discovery Plan
SP 1211(08)	Concrete Mix Design
SP 1212(08)	PCC Pavement – Uncontrolled Cracking
SP 1214(08)	Permits and Environmental Considerations
SP 1275(08)	Winter Limitations for HBP Mix

LIST OF STANDARD DRAWINGS

Standard No.	Description
D-20-1	NDDOT Abbreviations
D-20-2	NDDOT Abbreviations
D-20-3	NDDOT Abbreviations
D-20-10	NDDOT Utility Company Abbreviations
D-20-20	Line Styles
D-20-21	Line Styles
D-20-30	Symbols
D-20-31	Symbols
D-20-32	Symbols
D-203-6	Standard 90 Degree Flared Intersection
D-203-08	Section Line & Private Drive Approaches (Rural)
D-550-2	Longitudinal Joint Details
D-550-3	Transverse Contraction Joint Details
D-550-5	Transverse Construction Joint
D-704-2	Traffic Control For Coring of Hot Bituminous Pavement
D-704-4	Work Zone Business Sign Details
D-704-5	Contractor Sign Detail
D-704-7	Breakaway System For Construction Zone Signs – Perforated Tube
D-704-8	Breakaway System For Construction Zone Signs
D-704-9	Construction Sign Details
D-704-10	Construction Sign Details
D-704-11	Construction Sign Details
D-704-13	Barricade Details And Channelizing Devices
D-704-14	Construction Sign And Barricade Assembly Details
D-704-15	Construction Sign And Barricade Location Details
D-704-17	Sign Layout for One Lane Closure Two Lane Roadway
D-704-19	Construction Sign and Barricade Location Details
D-704-20	Construction Sign and Barricade Location Details
D-704-22	Construction Sign and Barricade Location Details
D-704-23	Construction Sign and Barricade Location Details
D-704-24	Construction Sign and Barricade Location Details
D-704-26	Construction Sign and Barricade Location Details
D-704-27	Traffic Control Plan For Moving Operations On Conventional Highways (Pavement Marking)
D-704-28	Traffic Control For Mobile Operations
D-704-30	Windrow Marking
D-704-34	Sign Layout For One Lane Closure
D-704-38	Traffic Control System - Median Crossover (800 ft Transition) - 55 MPH Speed Limit or Greater
D-704-39	Traffic Control System - Median Crossover (800 ft Transition) - 55 MPH Speed Limit or Greater
D-704-50	Portable Sign Support Assembly
D-704-57	Construction Sign and Barricade Location Details
D-704-63	One Lane Closure Four-Lane Divided Highway (For Access To Two-Way Two-Lane Roadway)
D-706-1	Type C Field Laboratory
D-708-2	Erosion and Siltation Controls
D-708-5	Erosion and Siltation Control Blanket Installation
D-708-6	Erosion Control Median or Ditch Inlet Protection
D-708-7	Erosion Control Fiber Roll Staking Details
D-714-01	Reinforced Concrete Pipe Culvert and End Sections
D-714-04	Corrugated Steel Pipe Culverts and End Sections (Round Pipe)
D-714-06	Corrugated Aluminum Pipe Culvert and End Sections (Round Pipe)
D-714-15	Slotted Section for Reinforced Concrete Pipe
D-714-18	Edgedrain Details
D-714-22	Concrete Pipe Ties
D-714-25	Transverse Centerline Pipe Backfill for Pipes More than 4 Feet Below the Proposed Base
D-714-26	Transverse Centerline Pipe Backfill for Pipes 4 Feet or Less Below the Proposed Base
D-714-28	Transverse Centerline Pipe Fill for New Pipe Laid on Existing Ground in Embankment Areas
D-720-1	Standard Monuments and Right of Way Markers
D-722-1	Inlet – Type 1
D-722-1A	Inlet – Catch Basin
D-722-2	Inlet – Type 2
D-722-5	Manhole Details
D-748-1	Valley Gutter and Curb & Gutter
D-752-2	Chain Link Fence
D-754-1	Pipe or W-Shape Assembly Details
D-754-3	Break-Away Base and Foundation Details Stub Post Connection (Pipe)
D-754-4	Multi-Directional Break Away Base
D-754-6	Hinge Plate Details-Perforated Fuse Plate Detail
D-754-9	Letter and Arrow details For Variable Length Signs
D-754-13	Structural Details W Shape Supports
D-754-18	Barricade and Advance Signs for Forward Roadway Termination
D-754-20	(Expressway-Freeway Use) Mile Posts
D-754-21	Reflectorized Delineators
D-754-23	Assembly Details
D-754-24	Mounting Details Perforated Tube
D-754-25	Mounting Details Perforated Tube
D-754-26	Sign Punching, Stringer and Support Location Details Regulatory, Warning, and Guide Signs
D-754-27	Sign Punching, Stringer and Support Location Details Regulatory, Warning, and Guide Signs
D-754-28	Sign Punching, Stringer and Support Location Details Regulatory, Warning, and Guide Signs

D-754-29	Sign Punching, Stringer and Support Location Details Regulatory, Warning, and Guide Signs
D-754-32	Sign Punching, Stringer and Support Location Details Regulatory, Warning, and Guide Signs
D-754-38	Sign Punching, Stringer and Support Location Details Regulatory, Warning, and Guide Signs
D-754-39	Sign Punching, Stringer and Support Location Details Regulatory, Warning, and Guide Signs
D-754-47	Sign Punching, Stringer and Support Location Details For Variable Length Signs
D-754-48	Sign Punching, Stringer and Support Location Details For Variable Length Signs
D-754-49	Sign Punching, Stringer and Support Location Details For Variable Length Signs
D-754-50	Sign Punching, Stringer and Support Location Details For Variable Length Signs
D-754-51	Sign Punching, Stringer and Support Location Details For Variable Length Signs
D-754-52	Sign Punching, Stringer and Support Location Details – Route Marker Signs
D-754-57	Sign Punching, Stringer and Support Location Details – Route Marker Signs
D-754-77	Sigh Punching, Stringer and Support Locations Details – Divided Highway Control Signs
D-754-78	Sigh Punching, Stringer and Support Locations Details – Divided Highway Control Signs
D-754-80	Light Standard, Signal Standard, and Span Wire Mounted Sign Assembly Detail
D-754-86	911 Support information and Sign Details
D-754-87	Sign Punching, Stinger and Support Location Details for Street Name Signs and 911 Signing
D-762-1	Pavement Marking Message Details
D-762-3	Pavement Marking Standard 90 Degree Flared Intersections
D-762-4	Pavement Marking
D-762-6	Short-Term Pavement Marking
D-770-1	Concrete Foundations (Traffic Signals & Highway Lighting)
D-770-2	Feed Points (Roadway Lighting)
D-770-3	Pull Box Details
D-770-4	Lighting and Signal Details
D-770-5	Light Standard Details
D-772-1	Feed Point – Traffic Signals
D-772-2	Traffic Signal Standards
D-772-3	Traffic Signal Standards (Mast Arm Type)
D-772-4	Traffic Signal Head Mounting
D-772-6	Interim Traffic Signals
D-772-7	Flashing Beacon

STATE	PROJECT NO.	SECTION NO.	SHEET NO.
ND	SOIA-7-085(092)183	4	1

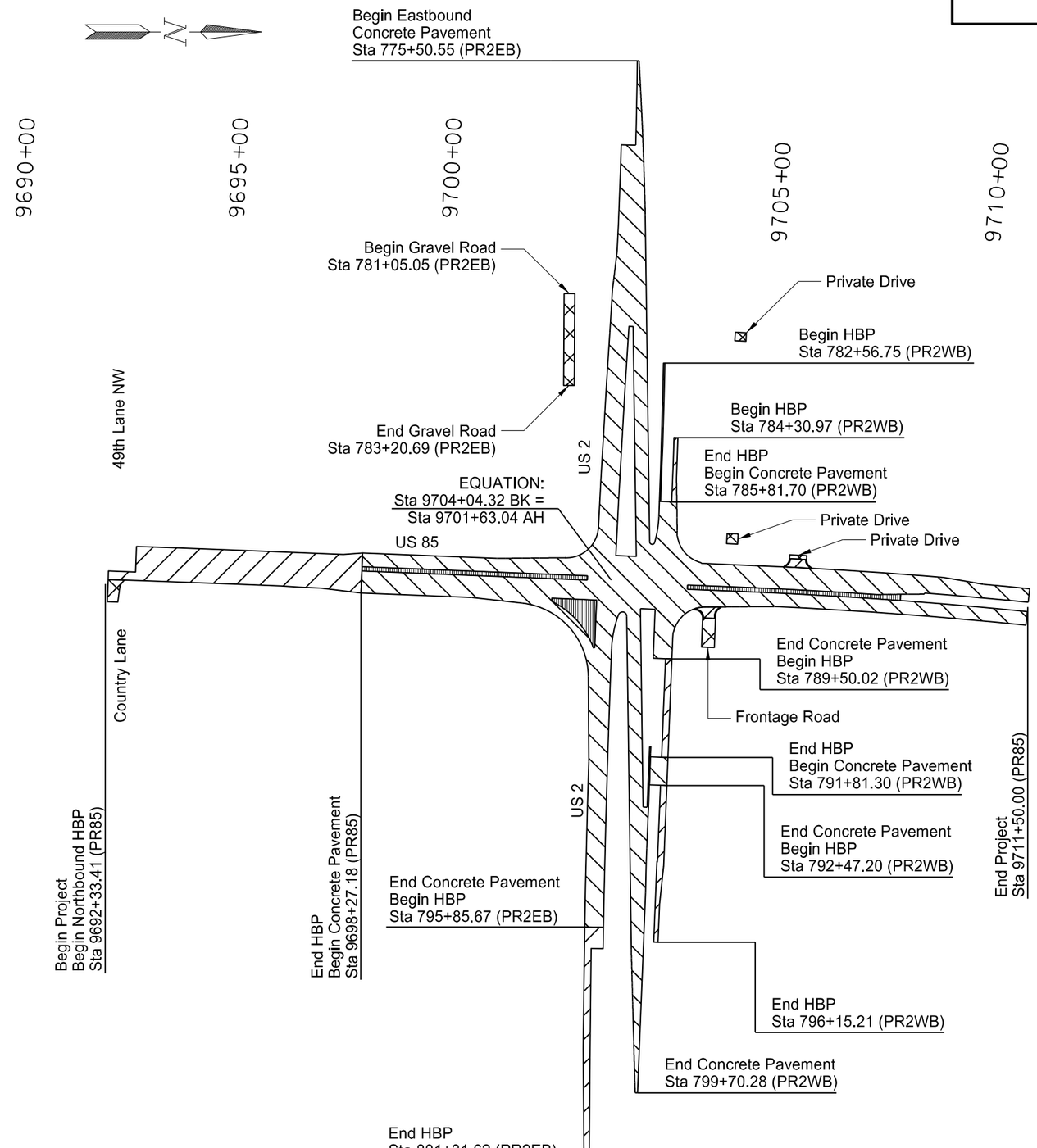

Legend

- Concrete
- HBP
- Concrete Median
- Gravel

This document was originally issued and sealed by Eric Bach, Registration Number PE- 5506, on 9/26/13 and the original document is stored at the North Dakota Department of Transportation

Scope of Work

US 85 Intersection Improvements

US 85
9692+33.41 to 9711+50.00

NOTES

100-021 WEEKLY PLANNING/REPORTING MEETING:

A. Purpose of Weekly Meeting.
   1. The contractor shall organize the weekly meeting to coordinate the efforts between subcontractors, utilities, local authorities, and others.

B. Contractor's Project Manager/Superintendent: Planning and Reporting.
   1. The contractor will be responsible for sending a knowledgeable representative to conduct a weekly Reporting/Planning meeting. It will be the contractor's responsibility to prepare minutes for each meeting and to make the appropriate distribution of the minutes. The minutes shall be approved by the Engineer prior to distribution.
   2. The contractor will be required to provide a written schedule of the next week's work and a tentative schedule of the following week.
   3. Reporting/Planning meeting will include discussion of problems encountered during the current week; information of interest to local authorities, subcontractors, utilities, and next week's prospective schedule.
   4. The contractor shall organize the weekly meeting contacting interested agencies. These agencies include, but are not limited to, the following:
      a. North Dakota Department of Transportation
      b. Local Government Agencies
      c. Police department
      d. Fire department
      e. Ambulance service
      f. Telephone Co.
      g. Power Co.
      h. Cable T.V.
      i. Gas Co.
      j. Railroad Co.
      k. Subcontractors
      l. Chamber of Commerce
      m. FHWA

100-P01 COORDINATION OF PROJECTS: A number of other projects will be under contract during the 2014 construction season in the vicinity of this project. It shall be the Contractor's responsibility to coordinate activities (including transitions at the beginning and end of the project), schedules, and traffic control delineations between projects.

100-P02 PUBLIC RELATIONS COORDINATOR: The Contractor shall provide a public relations and information coordinator. The coordinator shall not be the project superintendent or construction foreman. The coordinator should be knowledgeable in construction operations, possess written and verbal communication skills, be able to organize productive meetings, and be able to provide information necessary for media releases. The public relations coordinator will be responsible for providing the following;

- Organize, schedule, and conduct the weekly planning and reporting meetings (plan note 100-021).
- Provide routine face to face communications, with the public, property owners, and businesses affected by construction activities, including calling on businesses or residents along the corridor. The coordinator must have sufficient knowledge and authority to resolve property owner and business concerns regarding scheduling, maintaining access and construction operations.
- Provide information for news releases on construction activities to the Project Engineer at the North Dakota Department of Transportation, Williston District, prior to and during construction, to inform the public on construction activities, schedules, street closures, width or height restrictions to traffic, and traffic detour routes. The news release information on construction activities shall be updated on a timely basis (minimum two-week update).
- Advise Williston's City Engineer, (701)577-6368, of forthcoming construction activities in regard to street closures and traffic detour routes so that city agencies, city police, emergency service, schools, and other pertinent city agencies may be notified.
- Provide news media interviews as required.
- The public relations coordinator's name, work address, and work telephone number shall be made available so that the coordinator may address public questions.
- Property owner meetings will be organized and ran by the engineer and shall be attended by contractor.

The cost of the Public Relations Coordinator shall be included in other items.

105-P01 UTILITY COORDINATION: The Contractor shall arrange a Post Bid Utility Coordination Meeting with affected Utility Companies, NDDOT District Office, and the Project Engineer. This meeting shall be in addition to the preconstruction meeting. The Post Bid Utility Coordination Meeting shall be held near the project and shall be held no later than two weeks after the Department and the Contractor have executed the contract, as approved by the Engineer. The Contractor shall provide an agenda for the meeting, and be prepared to discuss the items on it. Items to discuss shall include, but not be limited to; plan for constructing the project, work schedule, utility adjustment/relocates needed prior to project start, utility adjustment/relocates that can be done concurrent with project, utility locates and site access. The Contractor shall publish meeting minutes and distribute the minutes to all attendees and the NDDOT Utilities Engineer within one week after the meeting. The Contractor shall have the Engineer review and comment on the meeting minutes before being distributed to all attendees.

106-P01 CONTRACTOR FURNISHED PROCTORS: The Contractor shall be responsible for the following minimum testing prior to placement of all materials requiring compaction control. A minimum of one 5 point proctor for each type of material encountered, with material samples splits submitted to the Engineer for Engineer's reference and identification. This requirement will apply to "Common Excavation-Type A", "Borrow-Excavation" and pipe backfill material. The cost of testing will not be paid for separately but shall be included in the bid price for other items.

107-P01 HAUL ROAD RESTRICTIONS: The Contractor shall contact the appropriate State, County, Township, or City officials to determine if there are any "No Haul Routes" prior to preparing a bid for this project. No paved County or Township roads shall be used as haul roads.

107-P02 CULTURAL RESOURCE CONSTRUCTION MONITORING: Construction implementation plans should consider how best to approach the project with construction monitoring crews, including monitor safety and project construction needs. Coordination with monitoring crews and setting process for education of all project crews to each other's duties will be the responsibility of the Contractor. Training, coordination, and pairing of monitoring and construction activities will take place in a manner to allow for effective and safe monitoring for discovery of human remains and archaeological features and completion of project construction needs and is the responsibility of the Contractor. For a

This document was originally issued and sealed by Eric Bach, Registration Number PE-5506, on 10/1/13 and the original document is stored at the North Dakota Department of Transportation.

NOTES

comprehensive understanding of the commitment, process, and responsibilities refer to Commitment No. 1 Section 06 of the Plans, and SP 1207(08).

200-010 SHRINKAGE: 25 percent additional volume is included for shrinkage in earth embankment.

203-P01 HAUL: No average haul has been computed for this project.

203-P02 EXCAVATION AND FILL ELEVATIONS: All ditch grades and contours are given at the top of the topsoil.

203-P03 DISCRETIONARY SUBCUT: If the Engineer determines that an area of the subgrade is unsuitable, the area shall be subcut 18" according to the discretionary subcut detail. The material that is subcut may be wasted or used in the ditch bottoms or on the back slope.

500 Linear Feet of discretionary subcut has been added to the quantities of "Common Excavation-Subcut", "Salvaged Base Course", and "Geotextile Fabric-Type R1", to be used at the discretion of the Engineer.

203-P04 POST REMOVAL: Some existing posts may need to be removed to accomplish the work on this project. The cost to remove the posts and dispose of them outside the highway right of way shall be included in the price bid for "Common Excavation-Type A."

203-P05 REMOVAL OF GRAVEL ROADWAYS: The existing pavement depth on gravel roadways and gravel driveways is unknown. The existing gravel pavement designated for removal has been included in the price bid for "Common Excavation-Type A."

203-P06 EXCAVATION AND DISPOSAL OF CONTAMINATED SOIL: If contaminated material is encountered, the Contractor shall notify the Engineer and the North Dakota Department of Health, Division of Waste Management (701-328-5166) as least 5 days in advance of the removal of the contaminated soil. The Engineer shall determine the excavation limits of the contaminated soil to be removed. The Contractor shall clear with the NDDH before any excavation of the contaminated soil. All costs for labor, material, and equipment to excavate, haul and treat the material shall be paid for as specified in Section 104.03 of the NDDOT Standard Specifications.

230-P01 SUBGRADE PREPARATION – TYPE A: Subgrade preparation shall be performed at a depth of 12 inches in all areas of this project, excluding the discretionary subcut areas and fills over 18 inches. Subgrade Preparation shall comply with Section 230.02 B.2 Type A of the Standard Specifications.

302-P01 TRIMMING SALVAGED BASE COURSE: Use surface tolerance Type B for the salvaged base course. Excess material removed from high points of the salvaged base course by the trimming operation shall be reincorporated into the salvaged base course.

The cost for providing the required grade and cross section shall be included in the unit price bid for "Salvaged Base Course."

302-P02 TRAFFIC SURFACE GRAVEL: An additional 100 Ton of Salvaged Base Course has been provided for maintaining traffic. The aggregate shall be used as directed by the Engineer in the field. This material will be used for repairs required for Road Maintenance as requested by the Engineer.

410-P01 SUPERPAVE FAA 45: The hot bituminous pavement shall be paver laid in approximately 4 equal depth lifts. The top two lifts shall each be 2" depth using PG 64-28 Asphalt Cement. PG 58-28 Asphalt Cement shall be used in the bottom lifts. The 2 lower lifts, shall be placed in equal lifts.

410-P02 MIX DESIGN PROPERTIES: The aggregate and mix design properties will meet the requirements outlined in Section 410 Superpave Volumetric Mix Design. The following aggregate and mix design properties are required:

Test	Criteria	Reference
Coarse Aggregate Angularity	85% min	NDDOT Field Sampling/Testing Manual
Fine Aggregate Angularity	45% min	AASHTO T 304
Gyratory Effort, # Gyrations	N_{ini}=7, N_{des}=75, N_{max}=115	AASHTO R 35
Voids Filled with Asphalt	65-75%	AASHTO M 323, T 166
%G_{mm} @ N_{ini}	89% max	AASHTO M 323, T 166

411-P01 TEMPORARY ASPHALT WEDGES: The Contractor shall place temporary asphalt wedges at all crossings to allow smooth passage of vehicles at these milled locations. The temporary wedges shall be placed on these milled areas prior to the traffic being allowed to cross the milled roadway section. All costs associated with labor, materials and equipment for the installation and removal of the asphalt wedges shall be included in the price bid for "Milling Pavement Surface".

550-P01 AUTO INSERTER: The use of an auto inserter on a slip form paver will be prohibited.

704-252 TRAFFIC CONTROL FOR UNEVEN PAVEMENT: The Contractor has the option of making the paving lanes even at the end of each day's paving operation or signing for the uneven pavement and providing the following devices: Install "Uneven Lanes" signs (Sign No. W8-11-48) and a supplemental plate (Sign No. W20-52-54), identifying the distance, on the right shoulder (both directions) in advance of the beginning of the uneven pavement and at major intersections. A major intersection shall be defined as a CMC, state, U.S. highway, or Interstate ramp. Install "Do Not Pass" signs (Sign No. R4-1-48) on the right shoulder (both directions) between the uneven lanes sign and the beginning of the uneven pavement and at major intersections. Install tubular markers spaced at two times the posted speed limit on the centerline where uneven pavement exists.

These traffic control devices shall be left in place until the lanes are even. These signs and tubular markers are included in the "Traffic Control Devices List" and will be measured and paid for at the contract unit price for each device. No extra compensation will be allowed for relocation due to work progression.

704-P01 TRAFFIC CONTROL: Traffic control shall consist of a temporary lane closures, flagging. The traffic control devices list has been developed using the following layouts on the Standard Drawings for traffic control:

D-704-2 for coring hot bituminous pavement.
D-704-15, Type A for temporary one lane closures during paving operations.
D-704-15, Type B for installation of centerline pipe conduit

This document was originally issued and sealed by Eric Bach, Registration Number PE-5506, on 10/1/13 and the original document is stored at the North Dakota Department of Transportation.

NOTES

D-704-20, Type G for project terminal signing during paving operations. Sign G20-1b-60 will not be required.
D-704-22, Type N
D-704-22, Type K and L for trucks hauling material.
D-704-24, Type S for work off the mainline highway.
D-704-24, Type T for placing topsoil, embankment, and seeding.
D-704-27 for striping operation.
D-704-34 for sign layout during lane closure

Standard Drawings D-704-5, 7, 8, 9, 10, 11, 13, 14, and 50 are applicable.

The traffic control requires flagging during working hours. The “NO CENTER STRIPE” sign (W8-12-48) shall be used during the daytime prior to the centerline pavement markings being placed before sunset.

The required traffic control signs and devices are included in the "Traffic Control Devices List" and will be measured and paid at the Contract Unit Price for each device. Additional devices required to accommodate the Contractor's operation shall be the Contractor's responsibility.

706-P01 FIELD OFFICE: The Contractor shall provide a field office that meets the following requirements:

1. Minimum total area of 450 square feet
2. Minimum cabinet space of 32 cubic feet
3. Minimum counter space of 40 square feet
4. Air conditioner with a minimum of 20,000 BTU's
5. Lighting with a minimum of 110 foot-candles
6. Minimum of 3 phone jacks
7. Fax Machine
8. Photocopy machine/scanner/printer capable of 11x17 photocopies, scanning, and printing with toner to last the duration of the project. The Engineer will be responsible to furnish the paper.
9. Hookups for heat, electricity, sewer, and water. The Contractor shall be responsible to pay the utility bill for these services.
10. Indoor bathroom facilities

The Contractor shall place the field office on the project, or as close to the project as possible. The Engineer must approve the location and condition of the field office. If there are any rental fees, the Contractor shall be responsible to pay any rental fees.

The field office shall be available for occupancy at the start of the project and remain available to project completion. The Engineer will be responsible to furnish the office equipment.

The Engineer will be responsible to furnish and pay the utility bill for the following services:

1. Telephone
2. FAX
3. Broadband internet service

All requirements of the Field Office are subject to approval by the Engineer. Payment for the field office shall be under the bid item "Field Office".

708-P01 SEEDING-TYPE B-CL II: The Contractor shall use the following seed mix for seeding-type B-CL II:

Grass Species	Variety	Pounds Per Live Seed/Acre
Western Wheatgrass	Rodan, Rosana, Walsh, Flintlock, W.R. Poole, Recovery	4.8
Switchgrass	Dacotah, Forestburg, or Sunburst, Summer	1.6
Green Needlegrass	Lodorm, AC Mallard, Fowler	1.2
Sideoats Grama*	Killdeer, Pierre, Butte	1.8
Slender Wheatgrass	Revenue, Primar, Adanac, Pryor, Firstrike	2.5
	TOTAL	11.9

* Substitute Thickspike or Stream bank Wheatgrass of the Critana, Banstock, Sodar, AC Polar or Elbee variety if Sideoats Grama is unavailable

All costs for labor, materials, and equipment necessary to complete this work shall be included in the unit price bid for “Seeding-Type B-CL II.”

708-P02 EROSION CONTROL BLANKET TYPE 2: All ECB Type 2 shall be made of a wood fiber material.

714-P01 PIPE CONDUIT – STORM DRAIN: Pipe conduit shall be used for storm drain type. See Alternative Pipe List for location of following materials that may be used for Pipe Conduit:

1. Reinforced Concrete Pipe (RCP) Class III
2. Aluminum Coated Spiral Rib Corrugated Steel Pipe (SRP) – ¾” x ¾” x 7-1/2”
3. Polymeric Coated Spiral Rib Corrugated Steel Pipe (SRP) – ¾” x ¾” x 7-1/2”

All reinforced concrete pipe joints shall be watertight and sealed with rubber gaskets which meet ASTM C443.

Polymeric coated pipe shall be handled at all times with equipment such as wide canvas slings and wide padded skids designed to prevent damage to the pipe coating. In truck shipments, the pipe shall be supported on wide cradles of suitable padded timbers. All chains, cables, or other equipment used for fastening the load must be padded. Any damage to the pipe coating from any cause prior to or during the installation of the pipe and before final acceptance of the project shall be replaced or repaired according to AASHTO M 243 & M 245 at the Contractor’s expense.

714-P02 PIPE CONDUIT CONNECTIONS: No field cutting of SRP pipe shall be allowed. Attach metal end sections to the ends of SRP pipe by mean of standard metal bands or as approved by the Engineer. Furnish and install toe plates on the metal end sections as indicated on the Plans.

714-P03 CONCRETE PIPE TIES: Any concrete pipe terminating with at least one end section is required to have concrete pipe ties placed on the last three sections of pipe in addition to the end section in accordance with Standard Drawing D-714-22, unless otherwise

This document was originally issued and sealed by Eric Bach, Registration Number PE-5506, on 10/1/13 and the original document is stored at the North Dakota Department of Transportation.

NOTES

noted. Concrete pipe that is placed from drainage structure to drainage structure (ex. Inlet, manhole, etc.) will not require concrete pipe ties.

714-P04 STORM DRAIN: All “PIPE CONDUIT (IN) – STORM DRAIN” or “PIPE CONC REINF (IN) CL III – STORM DRAIN” furnished shall have joints sealed with gaskets (including storm drain pipe ending with inlets or manholes). The gasket sealed joints shall be capable of remaining watertight when subject to a hydrostatic head of 15 feet as measured to the invert of the pipe.

714-P05 PIPE CONDUIT: Pipe inverts are located at the center of structure. Pipe inverts for culverts are located at the opening of the end section.

714-P06 PLUG PIPE: At the location designated on the plans for plug and abandon pipe; the Contractor shall pump the pipe full of controlled density backfill to prevent any future collapse or failure of the abandoned pipe.

The properties of the backfill shall be a blend of cement, water, pozzuolanic materials, and fillers. The material shall be fluid on placement to flow through and fill the pipes. The material shall be able to support normal loads after six hours and shall have a compressive strength in the range of 75 psi to 125 psi at 28 days. The material shall be such that it lends itself to easy removal with a tractor backhoe. If the mix design shown is used, no further testing will be required. The mix designs yield approximately one cubic yard of controlled density backfill.

MIX DESIGN	
Fly ash	300 lbs
Water	70 gals
Cement	100 lbs
Fine Aggregate	2600 lbs

Controlled density backfill shall be placed at the far end of the pipe cavity and the cavity is filled progressively from one end to the other. Controlled density backfill shall continue until refusal (when no more grout can be pumped). All labor, materials, and equipment necessary to perform this described work shall be included in the price bid for “Plug Pipe – All Types and Sizes.”

714-P07 BROKEN BACK AND BENT CULVERT INSTALLATION: Culverts at the locations in the plans shall be installed as broken back and/or bent pipes. Invert elevations and culvert segment lengths for these culverts have been noted on the cross sections.

Station	Diameter (inches)	Vertical Deflection Angle (Degrees)	Horizontal Deflection Angle (Degrees)
US 2 WB 776+76 - LT	24	2.39	N/A
US 2 EB & WB 776+76	24	0.98	0.5
US 2 EB 797+76 - RT	18	1.28	N/A

At WB US2 Sta. 776+76-LT, the deflection angle will be installed gradually over 2 sections of pipe. In the median of US2 at Sta. 776+76, a 7.5° horizontal bend will be installed and the remaining vertical and horizontal deflection angles shall be installed gradually over the length of 5 sections of pipe. If a construction join is required, it shall be wrapped in filter fabric and mortared. At EB US2 Sta. 797+76-RT the deflection angle shall be installed gradually over the length of 3 sections of pipe. The wider joint openings of these deflected pipe sections shall be wrapped externally with a filter fabric, and mortar shall be used to fill the joints. Longer tie bars may be necessary at these deflected joints.

All costs of materials, equipment, and labor to install the broken back and/or bent pipes as described above shall not be paid for separately and be included in the price bid for the corresponding size of “Pipe Conc Reinf.”

714-P08 RELAYING PIPE AND END SECTIONS: Relayed concrete pipe and concrete end sections shall be tied together as shown on Standard D-714-22.

The cost of drilling the required holes and furnishing and installing the tie bolts shall be included in the price bid for "Removal of Pipe - All Types & Sizes" and "Remove and Relay End Section - All Types & Sizes."

714-P09 DEWATERING FOR PIPE INSTALLATION: At locations designated for centerline and approach pipe installation, the Contractor shall provide dewatering if necessary according to site conditions. All costs associated with dewatering shall be included in the price bid for “Pipe Conc Reinf”, “Pipe Conduit”, and “Pipe Conduit-Approach”.

722-P01 CHIMNEY SEALS: External chimney seals shall be installed on all storm sewer manholes and Inlet-Type 1, Inlet-Type 2, and Inlet-Type 2 Double structures located within paved areas. The sleeve and extension shall be extruded from a high-grade rubber compound conforming to the applicable requirements of ASTM C923. The bands used for compressing the sleeve and extension against the inlet shall be fabricated from 16-gauge stainless steel conforming to ASTM A240, Type 304. Screws, bolts and nuts used on this band shall be stainless steel conforming to ASTM F593 and 594, Type 304. The chimney seals shall not be paid for separately but shall be included in the price bid for the structures.

748-P01 CURB AND GUTTER: All curb and gutter to be used on the project shall have a 4IN curb height as shown on Section 20 Sheet 8. All costs for labor, materials, and equipment to do this work shall be included in the unit price bid for “Curb and Gutter-Type 1.”

752-P01 RESET FENCE: The Contractor shall coordinate with the property owner and shall field investigate prior to bid. If the fence is unable to be reset, then the Contractor shall supply equipment to provide similar fence approved by the Engineer. All costs for labor, materials, and equipment needed for resetting gates to do this work shall be included in the unit price bid for “Fence Reset Existing.”

752-P02 FENCE CHAIN LINK WITH BARBED WIRE: The Contractor shall install new chain link with barbed wire fence as shown in Section 80 of the plan sheets. The Contractor shall match the type of existing fence in the surrounding area for the new chain link with barbed wire. All costs for labor, materials, and equipment to do this work shall be included in the unit bid price for “Fence Chain Link with Barbed Wire.”

754-P01 REMOVE SIGNS: The removed signs shall become the property of the Contractor and shall be disposed of outside the highway Right of Way. The existing supports and breakaway assemblies removed shall remain property of the state and shall be delivered to the NDDOT Williston District. The cost of removing and delivering the sign supports and breakaway assemblies shall be included in the price bid for “Flat Sheet For Signs-Type XI Refl Sheeting” or “Flat Sheet For Signs – Type IV Sheeting”

894-100 RETROREFLECTIVE SHEETING: Provide Type IV retroreflective sheeting that meets ASTM D 4956, Type IV. Provide Type XI retroreflective sheeting that meets ASTM D 4956, Type XI.

This document was originally issued and sealed by Eric Bach, Registration Number PE-5506, on 10/1/13 and the original document is stored at the North Dakota Department of Transportation.

NOTES

770-P01 BREAKAWAY LIGHT STANDARD: The breakaway light standards shall be of the davit type and designed for 8' mast arms and shall be galvanized. The bases shall be of the breakaway type. The shaft length shall be 40' from the top of the foundation to the bottom of the luminaire as shown in the plans. Duct seal all conduit stubs in concrete foundations. The light standard shall be round with the multi-directional slip base to match existing light standards.

770-P02 LUMINAIRES: The high-pressure sodium vapor luminaires shall be internal ballast-constant wattage, 120x240 voltage, operated on 240 volts.

770-P03 CONCRETE FOUNDATION HIGHWAY LIGHTING: The foundation for the Light Standard 40' tall with a single mast arm shall be 24" in diameter and 6' deep or 36" in diameter and 5' deep, and according to D-770-1.

770-P04 MULTIPLE UNDERGROUND CABLE: The plans call for using a mixture of Multiple Underground Cable and rigid conduit with single RHW/THW conductors. In lieu of the single conductors in conduit, the Contractor may furnish and install Multiple Underground Cable of the same size as shown in the plans. All Multiple Underground Cable passing under a roadway shall utilize a rigid conduit sleeve placed perpendicular to the roadway.

The conduit size shall be as specified in the National Electrical Code. If the contractor chooses to use the conduit and single conductors, the cost to furnish, install, and trench the conduit and pull the conductors shall be paid for at the contract price bid for Multiple Underground Cable. All labor, materials, and equipment necessary to perform this described work shall be included in the price bid for "Multiple Underground Cable".

The conduit required under the roadway for installing Multiple Underground Cable will continue to be paid for as conduit.

770-P05 REMOVE LIGHT STANDARD: The salvaged luminaires shall be delivered to the NDDOT District maintenance yard in Williston, ND. The Contractor shall abandon conduit and remove wire where practicable. Removed conduit and wire shall become property of the Contractor not to be re-used on this project. All labor, materials, and equipment necessary to perform this described work shall be included in the price bid for "Remove Light Standard".

770-P06 MODIFY EXISTING FEED POINT: The existing feed point, pad mounted at Sta. 785+88–180 RT, shall be revised to a Type IV feed point and relocated according to the plans. The existing foundation and circuits shall be removed per the removal plans. The Contractor shall furnish and install new circuit breakers in the cabinet.

The Contractor shall arrange with the local utility company to have the circuits disconnected from the source of live power.

The cost of installing and connecting the new circuit, and reconnecting the existing circuit shall be included in the price bid for the item "Modify Existing Feed Point" and shall include all labor, equipment and materials to complete the work.

This document was originally issued and sealed by Steve McHenry, Registration Number PE-8671, on 9/11/13 and the original document is stored at the North Dakota Department of Transportation.

NOTES

772-P01 PAINT: The traffic signal system components shall be painted in accordance with the following:

Transformer base- yellow
Mast arm –yellow
Shaft – yellow
Signal housing - yellow
Signal head mounting hardware -yellow
The color yellow shall be 13538 of Federal Standard No. 595.

772-P02 TRAFFIC SIGNAL HEAD BACK PLATES: Traffic signal head back plates shall be furnished with a yellow retroreflective border. The yellow border shall be installed around the perimeter of the face of the backplate and shall be one (1) inch wide. The border shall be furnished with sheeting consisting of prismatic lenses formed in a transparent synthetic resin, sealed, and backed with an aggressive pressure sensitive adhesive protected by a removable liner. The sheeting shall have a smooth surface with a distinctive interlocking diamond seal pattern and orientation marks visible on the face. Sheeting shall be Type XI reflective sheeting.

The cost for furnishing the border shall not be bid separately but shall be included in the price bid for “Traffic Signal System – Site 1.”

772-P03 UTILITY COORDINATION: The Contractor shall be responsible for coordination with Mountrail-Williams Electric Coop for the incoming electrical service to the Signal Control Cabinets. The signal control cabinet shall be metered separately from the lighting feed point. Mountrail-Williams Electric shall supply all conductors, conduit, and connections from the transformer to the meter. The Contractor shall be responsible for all cable, conduit, meter socket, and service disconnect from the meter to the signal control cabinet. Any cost by Mountrail-Williams Electric for the new installation shall be paid for by the NDDOT.

772-P04 CONTROLLER TYPE 1: The existing controller and cabinet at the US 2 intersection shall be reused. Any necessary updates to the controller or cabinet to make the new signal system fully operational shall be the contractor’s responsibility and paid for under the price bid for “Traffic Signal System – Site 1.”

772-P05 VIDEO DETECTION SYSTEM AND SPARE EQUIPMENT: The existing video detection system at the US 2 intersection shall be reused. The cost for making the video detection system fully operational at this intersection shall be included in the price bid for “Traffic Signal System – Site 1.”

772-P06 COMBINATION LIGHT AND SIGNAL STANDARD: The luminaries' extensions shall be of the Davit type with an 8' mast arm.

772-P07 FLASHING BEACONS AND ADVANCED WARNING SIGN: At the US 2 intersection the east and west flashing beacon systems shall be reused. New wire shall be run from the controller cabinet to the flasher cabinets.

The Contractor shall supply and install a W3-4-48 "Be Prepared To Stop" and a W16-13P-24 "When Flashing" supplemental sign as shown in the plans. The work shall also include 12 inch yellow LED flashing beacons with 5" louvered back plates mounted on each side of the sign assembly that will begin alternating flashing 12 seconds before the red indication. For information regarding the sign supports and bracing see sign summary. Signs, supports, anchors and bracing are paid for as part of Section 110. All other materials, labor and equipment necessary to furnish and install the flashers and advanced warning sign assemblies shall be included in the price bid for “Traffic Signal System – Site 1.”

772-P08 CONDUIT: Conduit shall be installed at the location shown on the plans. Conduit shall be pushed under existing pavement. Pushing conduit shall be included in the bid price for “Traffic Signal System – Site 1.”

All conduits shall be sealed with duct seal at the controller cabinet and at the traffic signal standard foundations.

772-P09 LABEL ALL FIELD CABLES: All labeling materials shall be approved by the City. Labels shall be readable without moving the cables. All field cables installed by the Contractor shall be labeled with the cable designations:

TYPE	LABEL	LABEL LOCATION
Communication cable	Comm./address of other end	Within 12" of conduit
Camera Coaxial cable	Detection zone (i.e. D2-1, D2-2, etc.)	Within 6" of terminals
Control cable	Cable number & location (i.e. NW, SW, etc.)	Within 12" of conduit
Opticom Cable	Preempt Number/Location (i.e. NW, SW, etc.)	Within 6" of terminals

Not a separate pay item, cost to be included in the price bid for “Traffic Signal System – Site 1.”

772-P10 CONTROLLER CABINET WIRING DIAGRAM: The following items shall be labeled on the cabinet wiring diagram, in addition to information required by NDDOT Standard Specification.

A. The camera number (i.e., VC-1) from the plan shall be labeled on the detector panel drawing adjacent to the point for termination.
B. The field wire terminals for the vehicle head control cables shall be labeled with the phase number and direction (i.e., 02, SB).
C. Provide a CAD drawing file of the as-built cabinet wiring diagram.

Not a separate pay item, cost to be included in the price bid for “Traffic Signal System – Site 1.”

772-P11 BATTERY BACK-UP: The existing battery back-up system at the US 2 intersection shall be reused. However, as part of this project the contractor shall furnish and install a new set of batteries that will fulfill the following requirements. The battery shall be sized to provide backup power to the system for a minimum of 2 hours in full signalized operation and a minimum of 8 hours in flash operation. The UPS shall have aux contacts to put the system into flash operation. The UPS shall incorporate full power management and diagnostic function. The UPS shall be installed in a temperature and humidity controlled environment. The UPS shall be installed in a separate enclosure on a separate pad from the signal controller

This document was originally issued and sealed by Nicholas J. Erpelding, Registration Number PE-5870, on 9/24/2013 and the original document is stored at the North Dakota Department of Transportation.

NOTES

cabinet at a location approved by the Engineer. All materials, labor and equipment necessary to furnish and install the battery back-up system shall be included in the price bid for “Traffic Signal System – Site 1”.

772-P12 CONFLICT MONITOR TESTING: A complete controller conflict monitor test shall be performed by the Contractor prior to unveiling the traffic heads. The NDDOT will supply the conflict monitor maintenance record test form along with instructions that must be followed completely before the signals are put into operation. All materials, labor and equipment necessary to conduct the conflict monitor testing shall be included in the price bid for “Traffic Signal System – Site 1.”

772-P13 PADLOCKS: The contractor shall obtain all padlocks from the NDDOT Williston District Office. Padlocks shall not be bid separately, but shall be included in the price bid for “Traffic Signal System – Site 1.”

772-P14 ADDITIONAL CONDUIT: Each foundation for a traffic signal standard and each feed point foundation shall have one spare 2-inch conduit. The direction of the conduit will be determined by the Engineer in the field and labeled in the cabinet by the Contractor. The spare conduits shall be plugged with a 2” or 3” expandable pipe plug. Not a separate pay item, cost to be included in the price bid for “Traffic Signal System – Site 1.”

772-P15 EMERGENCY VEHICLE PRE-EMPTION: The Contractor shall notify Monte Meiers, the City Engineer for the City of Williston, (phone number 701-577-6368) when the proposed signalized intersection EVP systems are tested and operable. The EVP equipment shall be of the same technology and fully compatible with the other EVP equipment used within the City of Williston. The confirmation light shall be at the same location on the mast arm as the EVP detectors.

772-P16 MAST ARM MOUNTED SIGNAL HEAD CLEARANCES: The Contractor shall furnish and install all mast arm mounted signal heads so that the clearance from the centerline of the roadway to the bottom of all mast arm mounted signal heads shall be a minimum 19 feet and a maximum of 21 feet. Not a separate pay item, cost to be included in the price bid for “Traffic Signal System – Site 1.”

772-P17 REMOVE INTERIM TRAFFIC SIGNAL: The contractor shall remove the existing signal at the US 2 intersection when the new permanent signal is fully operational. The contractor shall deliver the signal heads and deliver them to the NDDOT in Williston. The remaining equipment, including wood poles, guy wires, conductors and span wires are deemed not salvageable, shall become the property of the contractor and shall be disposed of outside the right of way. The contractor shall be responsible for any damage to the traffic signal heads, any damage to the equipment shall be repaired or replaced at the contractor's own expense. The Interim traffic signal removal shall not be bid separately but shall be included in the price bid for the item “Traffic Signal System – Site 1.”

772-P18 INTERIM TRAFFIC SIGNAL SYSTEM: The Contractor shall provide all materials, labor, and equipment to ensure that an interim signal system remains in place and operational during construction at the intersection of US 2 and US 85 (“Site 1”) as noted in the plans. The interim signal system shall be in place and operational for the entire construction process. Two stages of construction are shown in the plans, plus intermediary stages. During the first stage, the northwestern portion of the Site 1 intersection shall be open to traffic while other areas are under construction, as shown in the plans. During the second stage, the southeastern portion of the Site 1 intersection shall be open to traffic while other areas are under construction, as shown in the plans. Modifications that shall be required include, but are not limited to furnishing and installing new wood poles and span wires, and either salvaging and reinstalling or furnishing and installing all necessary wiring and signal equipment required to maintain traffic signal operations as existing in the field. The contractor shall coil sufficient signal cable to allow movement of span wire mounted signal heads to accommodate Stage 1 and Stage 1B construction. The contractor shall adjust signal heads as directed by the engineer for Stage 1B construction. All materials, labor and equipment necessary to modify the existing interim signal system during the entire construction process shall be covered in the price bid for “Interim Traffic Signal – Site 1.”

This document was originally issued and sealed by Nicholas J. Erpelding, Registration Number PE-5870, on 9/11/2013 and the original document is stored at the North Dakota Department of Transportation.

ENVIRONMENTAL COMMITMENTS

ENVIRONMENTAL COMMITMENTS: The North Dakota Department of Transportation and the Federal Highway Administration have made several environmental commitments to various agencies and the public to secure approval of this project. The environmental commitments are as follows:

Based on the NEPA documentation, no additional permits or environmental commitments have been identified beyond what is covered by the NDDOT's Standard Specification of Road and Bridge Construction.

Wetland Number	Cowardin Classification	Wetland Type	Wetland Size (acres)	Wetland Feature	USACE Jurisdictional Wetlands	Impacts to Wetlands	
						Temp.	Perm.
NO WETLANDS PRESENT							
TOTALS:			0.00			0.00	0.00

*A wetland Jurisdictional Determination was issued by the USACE on 6/13/2013 for PCN 19377 / CP-SOI-7-085(090)183; NWO-2011-02647-BIS.

COMMITMENT NO. 1: Cultural Resource construction monitoring will occur on the project to ensure that any inadvertent discoveries will be immediately identified and handled appropriately. Construction monitoring is described in SP 1207(08).

ACTION TAKEN/REQUIRED: The Contractor shall work with the Engineer to ensure that archaeological and tribal monitors working on the Project are provided safe and effective working environment to accomplish the goals set forth in Plan Note 107-P02 Cultural Resource Construction Monitoring, and SP 1207(08).

COMMITMENT NO. 2: Whooping crane surveillance monitoring will be conducted during the migration periods of April 1st to May 15th and September 1st to October 31st.

ACTION TAKEN/REQUIRED: If roosting, foraging or in-flight whooping cranes are observed within one mile of the project site during these migration periods, construction work will cease until the USFWS is contacted in order to evaluate the level of disturbance risk to the individuals present within the vicinity of the project area. Following coordination with the USFWS, construction activities would resume if it is unlikely that the bird(s) would be disturbed by the continuation of construction activities or after the bird(s) relocate to a new site beyond the disturbance area of the project corridor. In addition, if power lines are moved as a result of this project, the FHWA would determine if is necessary to equip the power lines with flight diverters to encourage whooping cranes to avoid the relocated power lines.

STATE	PROJECT NO.	SECTION NO.	SHEET NO.
ND	SOIA-7-085(092)183	8	1

Spec	Code	Item Description	Unit	Quantity
103	0100	Contract Bond	L SUM	0.29
103	0200	Escrow of Bid Documentation	L SUM	0.29
108	0001	Critical Path Method Schedule	L SUM	0.29
201	0330	Clearing & Grubbing	L SUM	0.50
202	0119	Saw Concrete	LF	395
202	0136	Removal of Pavement	TON	40381
202	0153	Saw Bituminous Surfacing-Full Depth	LF	2448
202	0169	Removal of End Section - All Types & Sizes	EA	17
202	0174	Removal of Pipe All Types and Sizes	LF	597
202	0312	Remove Existing Fence	LF	1133
203	0101	Common Excavation-Type A	CY	35402
203	0109	Topsoil	CY	11603
203	0138	Common Excavation-Subcut	CY	2806
203	0140	Borrow-Excavation	CY	9996
216	0100	Water	M GAL	1198
230	0300	Subgrade Preparation-Type A	STA	33.8
302	0100	Salvaged Base Course	TON	41277
302	0356	Aggregate Surface Course CL 13	TON	134
401	0100	MC70 or 250 Liquid Asphalt	GAL	3224
401	0150	SS1H or CSS1H or MS1 Emulsified Asphalt	GAL	1272
410	0215	Superpave FAA 45	TON	4275
410	0445	PG 58-28 Asphalt Cement	TON	192
410	0460	PG 64-28 Asphalt Cement	TON	74
410	0910	Cored Sample	EA	46
411	0105	Milling Pavement Surface	SY	1878
550	0328	14IN Non Reinf Concrete Pvmt CL AE-Doweled	SY	33233
702	0100	Mobilization	L SUM	0.29
704	0100	Flagging	MHR	1000
704	1000	Traffic Control Signs	UNIT	3110
704	1052	Type III Barricade	EA	21
704	1060	Delineator Drums	EA	229
704	1067	Tubular Markers	EA	176
704	1072	Flexible Delineators	EA	162
704	1087	Sequencing Arrow Panel-Type C	EA	2
706	0200	Field Laboratory-Type B	EA	0.29
706	0400	Field Office	EA	0.29
708	1020	Riprap-Loose Rock	CY	19
708	1430	Fiber Rolls 12IN	LF	7645
708	1431	Removal Fiber Rolls 12IN	LF	4885
708	1540	Inlet Protection-Special	EA	21
708	1541	Remove Inlet Protection-Special	EA	21
708	2240	Seeding-Type B-CL II	ACRE	17.0
708	2260	Seeding-Type B-CL IV	ACRE	16.4
708	5500	Mulching	ACRE	33.4
708	5651	ECB Type 2	SY	13377
709	0600	Geotextile Fabric-Type RR	SY	46
709	0701	Geotextile Fabric-Type R1	SY	14538
714	0310	Pipe Conc Reinf 18IN CL III	LF	20
714	0615	Pipe Conc Reinf 24IN CL III	LF	31
714	4097	Pipe Conduit 15IN-Storm Drain	LF	806
714	4099	Pipe Conduit 18IN-Approach	LF	74
714	4101	Pipe Conduit 18IN-Storm Drain	LF	32
714	4107	Pipe Conduit 24IN-Storm Drain	LF	913
714	4112	Pipe Conduit 30IN-Storm Drain	LF	252
714	4216	Pipe Conduit Arch 22IN x 13IN	LF	132
714	9660	Remove & Relay End Section-All Types & Sizes	EA	2
714	9680	Plug Pipe-All Types & Sizes	EA	1
714	9696	Edgedrain Non Permeable Base	LF	1735
720	0100	Monuments	EA	5
720	0110	Right of Way Markers	EA	21
722	0100	Manhole 48IN	EA	5
722	1100	Manhole Riser 48IN	LF	72.1
722	3510	Inlet-Type 2	EA	10
722	3520	Inlet-Type 2 Double	EA	4
722	3701	Inlet Special-Type 2 48IN	EA	3
722	3730	Inlet Special Catch Basin 9IN Beehive 48IN	EA	1
722	4010	Inlet Catch Basin 6IN Beehive	EA	1
722	4020	Inlet Catch Basin 9IN Beehive	EA	1
748	0140	Curb & Gutter-Type I	LF	6580
750	0200	Concrete Median Paving	SY	3595

Spec	Code	Item Description	Unit	Quantity
750	0210	Concrete Median Nose Paving	SY	26
752	0650	Fence Chain Link With Barbed Wire	LF	543
752	0930	Fence Reset Existing	LF	1000
752	2100	Vehicle Gate	EA	2
752	3100	Corner Assembly Chain Link	EA	5
752	4160	Double Brace Assembly Chain Link	EA	2
754	0110	Flat Sheet For Signs-Type XI Refl Sheeting	SF	239.1
754	0112	Flat Sheet For Signs-Type IV Refl Sheeting	SF	264.7
754	0193	Flexible Delineators-Type D	EA	11
754	0195	Diamond Grade Delineators-Type A	EA	21
754	0198	Diamond Grade Delineators-Type D	EA	4
754	0206	Steel Galv Posts-Telescoping Perforated Tube	LF	1662.8
754	0592	Reset Sign Panel	EA	21
754	0596	Reset Mile Post	EA	2
754	0805	Object Markers - Culverts	EA	23
754	1104	Remove Sign Foundation	EA	2
762	0112	Epoxy PVMT MK Message	SF	532
762	0113	Epoxy PVMT MK 4IN Line	LF	24352
762	0115	Epoxy PVMT MK 8IN Line	LF	2660
762	0118	Epoxy PVMT MK Curb Top & Face	LF	489
762	0122	Preformed Patterned PVMT MK-Message(Grooved)	SF	480
762	0420	Short Term 4IN Line-Type R	LF	73573
762	0424	Short Term 8IN Line-Type R	LF	9189
762	0426	Short Term 24IN Line-Type R	LF	84
762	0430	Short Term 4IN Line-Type NR	LF	12147
762	0434	Short Term 8IN Line-Type NR	LF	451
762	0436	Short Term 24IN Line-Type NR	LF	110
762	1104	PVMT MK Painted 4IN Line	LF	3417
762	1108	PVMT MK Painted 8IN Line	LF	664
762	1305	Preformed Patterned PVMT MK 4IN Line-Grooved	LF	9679
762	1309	Preformed Patterned PVMT MK 8IN Line-Grooved	LF	8954
762	1325	Preformed Patterned PVMT MK 24IN Line-Grooved	LF	269
762	1500	Obliteration of PVMT MK	SF	5170
766	0100	Mailbox-All Types	EA	4
770	0020	Concrete Foundation-Highway Lighting	EA	23
770	0060	Concrete Foundation-Feed Point-Type B	EA	1
770	0220	Cable Trench-Type II	LF	3793
770	0330	2IN Diameter Rigid Conduit	LF	1656
770	0331	2IN Diameter Rigid Steel Conduit	LF	9
770	0350	3IN Diameter Rigid Conduit	LF	291
770	0444	Multiple Underground Cable 3NO4 Style USE	LF	3951
770	0503	Underground Conductor NO2-Type RHW	LF	58
770	0504	Underground Conductor NO4-Type RHW	LF	4488
770	0602	Underground Conductor NO2-Type THW	LF	29
770	0604	Underground Conductor NO4-Type THW	LF	2244
770	1726	LT STD 8FT MA 40FT MT HT Breakaway	EA	23
770	4140	HP Sodium Vapor Luminaire-250 Watt	EA	23
770	4170	HP Sodium Vapor Luminaire-400 Watt	EA	6
770	4560	Remove Light Standard	EA	21
770	4582	Remove Concrete Foundation	EA	1
770	4590	Remove Feed Point	EA	1
770	9270	Modify Existing Feed Point	EA	1
772	2800	Interim Traffic Signals	EA	2
772	9811	Traffic Signal System - Site 1	EA	1
910	0480	Trash Rack	EA	1

Quantities

US 85 Intersection Improvements

BASIS OF ESTIMATE

Pavement

Salvaged Base Course @ 1.875 Ton/CY
Aggregate Surface Course CL 13 @ 1.875 Ton/CY
MC70 or 250 Liquid Asphalt @ 0.25 Gal/SY
Blotter Material Cl 44 @ 15 lbs/SY (included in the price bid for MC70 or 250 Liquid Asphalt)
SS-1h or CSS-1h or MS1 Emuls Asphalt @ 0.05 Gal/SY
Superpave FAA 45 @ 2 Ton/CY
PG 58-28 Asphalt Cement @ 6.0% (bottom lifts)
PG 64-28 Asphalt Cement @ 6.0% (top lifts)

Topsoil

6" removal and replacement depth

Water

25 MGal/Mile for Dust Palliative
20 Gal/Ton for Aggregates
10 Gal/CY for Embankment

Coring

Density Cores

LOT 1: US 85 South of US 2
Sublot 1: 9692+33.41 to 9696+47.18 = 413.77 ft
Sublot 2: 9692+97.18 to 9696+47.18 = 350.00 ft
Sublot 3: 9692+97.18 to 9696+47.18 = 350.00 ft
Sublot 4: 9692+97.18 to 9696+47.18 = 350.00 ft
(1 Lot, 4 Sublots, 2 Cores/Sublot, 4 Lifts) = **32 Cores**

LOT 2: WB West of US 85
Sublot 1: 784+30.97 to 785+81.70 = 150.73 ft
(1 Lot, 1 Sublot, 2 Cores/Sublot, 1 Lift) = **2 Cores**

LOT 3: WB East of US 85
Sublot 1: 789+50.02 to 791+81.30 = 231.28 ft
Sublot 2: 792+47.20 to 796+15.21 = 368.01 ft
(1 Lot, 2 Sublots, 2 Cores/Sublot, 1 Lift) = **4 Cores**

LOT 4: EB East of US 85
Sublot 1: 795+85.67 to 796+35.70 = 50.03 ft
Sublot 2: 795+85.67 to 801+31.62 = 545.95 ft
(1 Lot, 2 Sublots, 2 Cores/Sublot, I Lift) = **4 Cores**

District Materials Coordinator Cores

One full depth core per Lot
4 Lots * 1 Core/Lot ≈ **4 Cores**

Total Cores = 46

Mailboxes

Station	Type	Work
9704+49 – RT	Single	Reset
9704+52 – RT	Single	Reset
9704+54 – RT	Single	Reset
9704+57 – RT	Single	Reset

Salvaged Base Course Summary

Removal of Pavement	Milling	Salvaged Base Course Required	Material Needed
(Ton)	(Ton)	(Ton)	(Ton)
A	B	C	D = C - B - A
40,381 (Concrete & Asphalt)	209		
TOTAL: 40,381	209	41,277	687

Temporary Pavement Marking

Quantities shown in Section 100 Plan Sheets

This document was originally issued and sealed by Eric Bach, Registration Number PE-5506, on 9/26/13 and the original document is stored at the North Dakota Department of Transportation.

STATE	PROJECT NO.	SECTION NO.	SHEET NO.
ND	SOIA-7-085(092)183	10	2

BASIS OF ESTIMATE

Permanent Pavement Marking

White Edge Line - Preformed Patterned Pavement MK 4in Line

Alignment	Location	Basis	Quantity	Unit
Highway 85 (NB)	9698+27 to 9711+50	5,280 LF/mile	1,323	LF
Highway 85 (SB)	9698+27 to 9711+50	5,280 LF/mile	1,323	LF
Highway 2 EB	777+48 to 786+48	5,280 LF/mile	900	LF
Highway 2 EB	789+98 to 795+86	5,280 LF/mile	588	LF
Highway 2 WB	785+82 to 786+48	5,280 LF/mile	66	LF
Highway 2 WB	789+00 to 796+15	5,280 LF/mile	715	LF
		Total	**4,915**	**LF**

White Lane Line Skips - Preformed Patterned Pavement MK 4in Line

Alignment	Location	Basis	Quantity	Unit
Highway 85 (NB)	9698+27 to 9711+50	1,320 LF/mile	331	LF
Highway 85 (SB)	9698+27 to 9711+50	1,320 LF/mile	331	LF
Highway 2 EB	777+43 to 787+11	1,320 LF/mile	240	LF
Highway 2 EB	788+88 to 795+86	1,320 LF/mile	180	LF
Highway 2 WB	785+82 to 786+58	1,320 LF/mile	20	LF
Highway 2 WB	788+37 to 796+15	1,320 LF/mile	200	LF
		Total	**1,302**	**LF**

White Lane Line Skips - Painted Pavement MK 4in Line

Alignment	Location	Basis	Quantity	Unit
Highway 85 (NB)	9692+87 to 9698+27	1,320 LF/mile	135	LF
Highway 85 (SB)	9696+29 to 9698+27	1,320 LF/mile	50	LF
		Total	**185**	**LF**

White Edge Line - Painted Pavement MK 4in Line

Alignment	Location	Basis	Quantity	Unit
Highway 85 (NB)	9692+87 to 9698+27	5,280 LF/mile	540	LF
Highway 85 (SB)	9692+97 to 9698+27	5,280 LF/mile	530	LF
		Total	**1070**	**LF**

White Edge Line - Epoxy Pavement MK 4in Line

Alignment	Location	Basis	Quantity	Unit
Highway 2 EB	746+50 to 777+48	5,280 LF/mile	3,098	LF
Highway 2 WB	763+50 to 785+82	5,280 LF/mile	2,232	LF
Highway 2 EB	795+86 to 815+47	5,280 LF/mile	1,961	LF
Highway 2 WB	796+15 to 831+50	5,280 LF/mile	3,535	LF
		Total	**10,826**	**LF**

White Lane Line Skips - Epoxy Pavement MK 4in Line

Alignment	Location	Basis	Quantity	Unit
Highway 2 EB	746+50 to 777+43	1,320 LF/mile	780	LF
Highway 2 WB	763+50 to 785+82	1,320 LF/mile	560	LF
Highway 2 EB	795+86 to 814+33	1,320 LF/mile	470	LF
Highway 2 WB	796+15 to 831+50	1,320 LF/mile	890	LF
		Total	**2,700**	**LF**

Yellow Edge Line - Epoxy Pavement MK 4in Line

Alignment	Location	Basis	Quantity	Unit
Highway 2 EB	746+50 to 777+48	5,280 LF/mile	3,098	LF
Highway 2 WB	763+50 to 785+82	5,280 LF/mile	2,232	LF
Highway 2 EB	795+86 to 815+47	5,280 LF/mile	1,961	LF
Highway 2 WB	796+15 to 831+50	5,280 LF/mile	3,535	LF
		Total	**10,826**	**LF**

White Turn Lane Line - Epoxy Pavement MK 8in Line

Alignment	Location	Basis	Quantity	Unit
Highway 2 EB	759+50 to 762+50	10,560 LF/mile	600	LF
Highway 2 WB	763+50 to 767+00	10,560 LF/mile	700	LF
Highway 2 EB	811+00 to 814+33	10,560 LF/mile	666	LF
Highway 2 WB	815+27 to 818+74	10,560 LF/mile	694	LF
		Total	**2,660**	**LF**

Epoxy Pavement MK Message

Alignment	Location	Basis	Quantity	Unit
Highway 2 EB	759+50 to 762+50	2 "LT" or "RT" and 2 "only"	76	SF
Highway 2 WB	763+50 to 767+00	4 "LT" or "RT" and 4 "only"	152	SF
Highway 2 EB	811+00 to 814+33	4 "LT" or "RT" and 4 "only"	152	SF
Highway 2 WB	815+27 to 818+74	4 "LT" or "RT" and 4 "only"	152	SF
		Total	**532**	**SF**

Subgrade Prep Lengths

US 85		Sta.
9692+97.2 to	9703+04.0	10.1
9706+93.6 to	9708+06.5	1.1
9712+74.6 to	9713+08.7	0.3
	Total =	**11.5**

US 2 West Bound		Sta.
785+96.0 to	789+35.8	3.4
	Total =	**3.4**

US 2 East Bound		Sta.
777+48.6 to	796+35.7	18.9
	Total =	**18.9**

Total Stations = 33.8

This document was originally issued and sealed by Eric Bach, Registration Number PE-5506, on 9/26/13 and the original document is stored at the North Dakota Department of Transportation.

STATE	PROJECT NO.	SECTION NO.	SHEET NO.
ND	SOIA-7-085(092)183	10	3

US 85

Material	Unit	Shoulder Widening 8" Hot Bituminous Pavement and 24" Salvaged Base Course			4 Lane Section w/ Paved Median 6" Hot Bituminous Pavement and 24" Salvaged Base Course			6 Lane Section w/ Raised Median Full Depth Reconstruction - 14" Concrete Pavement with 8" Salvaged Base Course			6 Lane Section w/ Raised Median Full Depth Reconstruction - 14" Concrete Pavement with 8" Salvaged Base Course		
		Sta 9692+33.41 to Sta 9692+97.18			Sta 9692+97.18 to Sta 9698+27.18			Sta 9698+27.18 to Sta 9704+04.32 BK			Sta 9701+63.04 AH to Sta 9710+89.69		
		Total Stations = 0.64			Total Stations = 5.30			Total Stations = 5.77			Total Stations = 9.27		
		Width (ft)	Depth (in)	Quantity per Station	Width (ft)	Depth (in)	Quantity per Station	Width (ft)	Depth (in)	Quantity per Station	Width (ft)	Depth (in)	Quantity per Station
Salvaged Base Course @ 1.875 Ton/CY	Ton	24.58	24.00	425.63	89.16	24.00	1416.88	103.18	8.00	498.89	94.00	8.00	441.76
Salvaged Base Course @ 1.875 Ton/CY (Median)	Ton							6.00	22.00	76.39	6.00	22.00	76.39
Aggregate Surface Course CL 13 @ 1.875 Ton/CY	Ton												
14 IN Non-Reinf Concrete Pavement CL AE	SY							84.00	14.00	933.33	84.00	14.00	933.33
Concrete Median Pavement - 4" Depth	SY							6.00	4.00	66.67	6.00	4.00	66.67
Milling Pavement Surface - 2" Min Depth	SY												
MC70 or 250 Liquid Asphalt @ 0.25 Gal/SY (one application on base course)	Gal	24.58		68.28	89.16		247.67						
SS-1h or CSS-1h or MS1 Emuls Asphalt @ 0.05 Gal/SY (bottom lifts)	Gal	20.00		22.22	80.00		88.89						
SS-1h or CSS-1h or MS1 Emuls Asphalt @ 0.05 Gal/SY (top lift)	Gal	20.00		11.11	80.00		44.44						
Superpave FAA 45 @ 2 Ton/CY (Overlay)	Ton												
Superpave FAA 45 @ 2 Ton/CY (Full Depth)	Ton	20.00	8.00	110.07	80.00	6.00	317.52						
PG 58-28 Asphalt Cement @ 6.0%	Ton	20.00	4.00	3.30	80.00	4.00	12.70						
PG 64-28 Asphalt Cement @ 6.0%	Ton	20.00	4.00	3.30	80.00	2.00	6.35						

US 85

Material	Unit	4 Lane Section w/ Raised Median Full Depth Reconstruction - 14" Concrete Pavement with 8" Salvaged Base Course		
		Sta 9710+89.69 to 9711+50		
		Total Stations = 0.60		
		Width (ft)	Depth (in)	Quantity per Station
Salvaged Base Course @ 1.875 Ton/CY	Ton	76.00	8.00	364.35
Salvaged Base Course @ 1.875 Ton/CY (Median)	Ton			
Aggregate Surface Course CL 13 @ 1.875 Ton/CY	Ton			
14 IN Non-Reinf Concrete Pavement CL AE	SY	64.00	14.00	711.11
Concrete Median Pavement - 4" Depth	SY			
Milling Pavement Surface - 2" Min Depth	SY			
MC70 or 250 Liquid Asphalt @ 0.25 Gal/SY (one application on base course)	Gal			
SS-1h or CSS-1h or MS1 Emuls Asphalt @ 0.05 Gal/SY (bottom lifts)	Gal			
SS-1h or CSS-1h or MS1 Emuls Asphalt @ 0.05 Gal/SY (top lift)	Gal			
Superpave FAA 45 @ 2 Ton/CY (Overlay)	Ton			
Superpave FAA 45 @ 2 Ton/CY (Full Depth)	Ton			
PG 58-28 Asphalt Cement @ 6.0%	Ton			
PG 64-28 Asphalt Cement @ 6.0%	Ton			

This document was originally issued and sealed by Eric Bach, Registration Number PE- 5506, on 9/26/13 and the original document is stored at the North Dakota Department of Transportation

Note: Quantities do not include tapers.
For total quantity for bid items see: Section 60, Section 90, Page 20-12, and Page 100-2

STATE	PROJECT NO.	SECTION NO.	SHEET NO.
ND	SOIA-7-085(092)183	10	4

US 2

Material	Unit	Shoulder Widening 2" Bituminous Overlay with 8.5" Bituminous Full Depth and 9" Salvaged Base Course			2 Lane Section w/ 2 Left Offset Turn Lanes and Right Turn Lane 2" Bituminous Overlay with 8.5" Bituminous Full Depth and 9" Salvaged Base Course			Shoulder Widening 2" Bituminous Overlay with 8.5" Bituminous Full Depth and 9" Salvaged Base Course			2 Lane Full Depth Reconstruction - 14" Concrete Pavement with 8" Salvaged Base Course		
		US 2 WB 782+56.75 to 785+81.70			US 2 WB 789+50.02 to 791+81.30 US 2 WB 792+47.20 to 799+70.28			US 2 EB 795+85.67 to 801+31.62			US 2 EB Sta 775+50.55 to 777+48.61		
		Total Stations = 3.25			Total Stations = 9.54			Total Stations = 5.46			Total Stations = 1.98		
		Width (ft)	Depth (in)	Quantity per Station	Width (ft)	Depth (in)	Quantity per Station	Width (ft)	Depth (in)	Quantity per Station	Width (ft)	Depth (in)	Quantity per Station
Salvaged Base Course @ 1.875 Ton/CY	Ton	11.72	9.00	87.86	47.45	Varies	222.36	6.86	9.00	49.14	17.59	8.00	92.04
Salvaged Base Course @ 1.875 Ton/CY (Median)	Ton				15.00	22.00	190.97						
Aggregate Surface Course CL 13 @ 1.875 Ton/CY	Ton												
14 IN Non-Reinf Concrete Pavement CL AE	SY				28.00	14.00	311.11				11.00	14.00	122.22
Concrete Median Pavement - 4" Depth	SY				15.00	4.00	166.67						
Milling Pavement Surface - 2" Min Depth	SY	10.75	2.00	119.44	13.00	2.00	144.44	11.00	2.00	122.22			
MC70 or 250 Liquid Asphalt @ 0.25 Gal/SY (one application on base course)	Gal	11.72		32.56	7.86		21.83	6.86		19.06			
SS-1h or CSS-1h or MS1 Emuls Asphalt @ 0.05 Gal/SY (bottom lifts)	Gal	2.00		2.22	3.00		3.33	2.00		2.22			
SS-1h or CSS-1h or MS1 Emuls Asphalt @ 0.05 Gal/SY (top lift)	Gal	12.75		7.08	16.00		8.89	13.00		7.22			
Superpave FAA 45 @ 2 Ton/CY (Overlay)	Ton	10.75	2.00	13.27	13.00	2.00	16.05	11.00	2.00	13.58			
Superpave FAA 45 @ 2 Ton/CY (Full Depth)	Ton	2.00	8.50	35.99	3.00	8.50	28.49	2.00	8.50	23.24			
PG 58-28 Asphalt Cement @ 6.0%	Ton	2.00	Varies	1.08	3.00	Varies	0.85	2.00	Varies	0.70			
PG 64-28 Asphalt Cement @ 6.0%	Ton	12.75	Varies	1.88	16.00	Varies	1.82	13.00	Varies	1.51			

US 2

Material	Unit	2 Lane Section w/ Acceleration Lane Full Depth Reconstruction - 14" Concrete Pavement with 8" Salvaged Base Course			2 Lane Section w/ 2 Left Offset Turn Lanes and Right Turn Lane Full Depth Reconstruction - 14" Concrete Pavement with 8" Salvaged Base Course			Gravel Frontage Road 4" Aggregate Surface Course CL 13 and 12" Salvaged Base Course		
		US 2 WB Sta 785+81.70 to 786+48.16 US 2 EB Sta 789+98.28 to 795+85.67			US 2 EB Sta 777+48.61 to 786+48.47 US 2 WB 789+00.21 to 789+50.02 US 2 WB 791+81.30 to 792+47.20			US 2 EB Sta 781+05.05 to 783+20.69		
		Total Stations = 6.54			Total Stations = 10.16			Total Stations = 2.16		
		Width (ft)	Depth (in)	Quantity per Station	Width (ft)	Depth (in)	Quantity per Station	Width (ft)	Depth (in)	Quantity per Station
Salvaged Base Course @ 1.875 Ton/CY	Ton	57.18	8.00	285.93	85.18	8.00	415.56	27.92	12.00	224.24
Salvaged Base Course @ 1.875 Ton/CY (Median)	Ton				22.75	22.00	289.64			
Aggregate Surface Course CL 13 @ 1.875 Ton/CY	Ton							25.00	4.00	61.25
14 IN Non-Reinf Concrete Pavement CL AE	SY	44.00	14.00	488.89	68.00	14.00	755.56			
Concrete Median Pavement - 4" Depth	SY				22.75	4.00	252.78			
Milling Pavement Surface - 2" Min Depth	SY									
MC70 or 250 Liquid Asphalt @ 0.25 Gal/SY (one application on base course)	Gal									
SS-1h or CSS-1h or MS1 Emuls Asphalt @ 0.05 Gal/SY (bottom lifts)	Gal									
SS-1h or CSS-1h or MS1 Emuls Asphalt @ 0.05 Gal/SY (top lift)	Gal									
Superpave FAA 45 @ 2 Ton/CY (Overlay)	Ton									
Superpave FAA 45 @ 2 Ton/CY (Full Depth)	Ton									
PG 58-28 Asphalt Cement @ 6.0%	Ton									
PG 64-28 Asphalt Cement @ 6.0%	Ton									

Note: Quantities do not include tapers.
For total quantity for bid items see: Section 60, Section 90, Page 20-12, and Page 100-2

This document was originally issued and sealed by Eric Bach, Registration Number PE- 5506, on 9/12/13 and the original document is stored at the North Dakota Department of Transportation

STATE	PROJECT NO.	SECTION NO.	SHEET NO.
ND	SOIA-7-085(092)183	11	1

Common Excavation Type-A	35402

Earthwork Balance	
Embankment Adjusted	45398
- Common Excavation	35402
Borrow Excavation	9996

Topsoil	
Excavation	11603
Embankment	11551
Waste	52

Location	Common Excavation Type - A	Embankment		Balance	
		Roadway	Adjusted	Waste	Borrow
	CY	CY	CY	CY	CY
	A	B	C = B * CF	D = A - C	D = C - A
US Hwy 85 South of US Hwy 2	8250	6621	8277		27
US Hwy 85 North of US Hwy 2	4515	10017	12522		8007
US Hwy 2 WB	2289	6111	7639		5350
US Hwy 2 EB	11904	5641	7052	4852	
Median Crossover (Sheet 20-12)	2500	2400	3000		500
Median Crossover (Sheet 20-13)	2500	2400	3000		500
Traffic Control Stage 1 (Sheet 100-2)	3444	3126	3908		464
Totals	35402	36316	45398	4852	14848

CF= 1.25

Location	Topsoil Excavation	Topsoil Embankment	Balance
	CY	CY	CY
	E	F	G = E - F
US Hwy 85 South of US Hwy 2	3750	3705	45
US Hwy 85 North of US Hwy 2	383	1366	-983
US Hwy 2 WB	2620	2144	476
US Hwy 2 EB	3751	3237	514
Median Crossover (Sheet 20-12)	460	460	0
Median Crossover (Sheet 20-13)	639	639	0
Traffic Control Stage 1 (Sheet 100-2)	0	0	0
Totals	11603	11551	52

This document was originally issued and sealed by Eric Bach, Registration Number PE- 5506, on 9/30/13 and the original document is stored at the North Dakota Department of Transportation

Earthwork & Topsoil Summary

US 85 Intersection Improvements

STATE	PROJECT NO.	SECTION NO.	SHEET NO.
ND	SOIA-7-085(092)183	11	2

Station	End Area (SF)				Volume (CY)				Mass Oridinate	
	Topsoil		Embankment		Topsoil		Embankment		Topsoil	Embankment
	Excavation	Fill	Excavation	Fill	Excavation	Fill	Excavation	Fill		
9692+33.41	0.0	0.0	44.5	37.9	0	0	0	0	0	0
9692+50.00	0.0	0.0	37.7	29.1	0	0	25	27	0	-2
9692+58.29	12.4	4.7	40.5	0.0	2	1	12	5	1	5
9692+97.18	104.5	98.2	288.8	87.0	84	74	237	79	11	163
9693+00.00	105.0	98.4	264.2	98.0	11	10	29	13	12	179
9693+11.07	106.0	99.2	199.2	133.3	43	40	95	59	15	215
9693+13.52	106.1	99.3	187.2	138.0	10	9	18	15	16	218
9693+50.00	106.0	99.3	141.2	219.8	143	134	222	303	25	137
9693+97.18	104.4	98.2	138.8	349.1	184	172	245	622	37	-240
9694+00.00	104.2	98.0	139.7	344.7	11	10	15	45	38	-270
9694+50.00	102.6	97.1	154.9	293.6	192	181	273	739	49	-736
9695+00.00	101.1	95.8	160.2	243.7	189	179	292	623	59	-1067
9695+13.52	100.5	95.2	163.6	227.7	50	48	81	148	61	-1134
9695+50.00	99.3	93.9	179.4	163.6	135	128	232	330	68	-1232
9695+92.18	96.3	91.2	171.2	100.4	153	145	274	258	76	-1216
9696+00.00	96.5	91.0	168.2	99.9	28	26	49	37	78	-1204
9696+00.27	96.5	91.0	168.1	100.0	1	1	2	2	78	-1204
9696+47.17	96.0	87.9	152.3	104.1	167	155	278	222	90	-1148
9696+50.00	95.6	90.4	169.4	98.3	10	9	17	14	91	-1145
9696+57.52	95.5	90.2	169.7	98.8	27	25	47	34	93	-1132
9697+00.00	95.6	89.6	161.5	84.3	150	141	261	180	102	-1051
9697+37.18	97.9	90.6	153.1	105.4	133	124	217	164	111	-998
9697+50.00	98.7	90.4	146.8	104.3	47	43	71	63	115	-990
9697+67.18	99.3	89.8	140.1	114.8	63	57	91	88	121	-987
9697+90.00	113.0	101.4	151.1	131.5	90	81	123	130	130	-994
9698+00.00	113.2	100.4	150.4	133.5	42	37	56	62	135	-1000
9698+27.18	107.5	101.5	137.1	165.4	111	102	145	188	144	-1043
9698+30.00	105.0	101.5	140.6	163.4	11	11	14	22	144	-1051
9698+50.00	83.1	101.6	126.5	156.1	70	75	99	148	139	-1100
9699+00.00	105.1	101.5	102.9	213.3	174	188	212	428	125	-1316
9699+50.00	104.1	101.5	113.8	213.1	194	188	201	494	131	-1609
9700+00.00	102.4	101.5	160.7	208.8	191	188	254	489	134	-1844
9700+50.00	102.2	104.5	198.2	195.3	189	191	332	468	132	-1980
9700+62.07	102.0	104.8	193.8	193.3	46	47	88	109	131	-2001
9700+86.71	102.7	104.3	160.0	186.4	93	95	161	217	129	-2057
9700+97.55	103.8	103.7	147.2	182.4	41	42	62	93	128	-2088
9701+00.00	104.1	103.5	143.6	181.6	9	9	13	22	128	-2097
9701+15.46	106.7	102.7	125.6	177.2	60	59	77	129	129	-2149
9701+21.56	95.3	91.6	125.5	176.3	23	22	28	50	130	-2171
9701+42.11	94.7	92.0	137.7	176.9	72	70	100	168	132	-2239
9701+50.00	94.2	91.8	143.0	174.7	28	27	41	64	133	-2262
9701+82.12	92.1	91.5	167.2	140.8	111	109	184	235	135	-2313
9701+93.90	90.4	91.3	172.7	114.9	40	40	74	70	135	-2309
9702+00.00	89.7	91.3	177.6	102.2	20	21	40	32	134	-2301
9702+30.00	18.0	91.2	181.8	143.6	60	101	200	172	93	-2273
9702+50.00	17.7	55.4	318.6	57.7	13	54	185	94	52	-2182
9702+84.20	51.9	54.5	544.0	56.6	44	70	546	90	26	-1726
9703+00.00	62.8	59.6	568.2	61.2	34	33	325	43	27	-1444
9703+02.18	64.3	61.1	580.6	65.3	5	5	46	7	27	-1405

This document was originally issued and sealed by Eric Bach, Registration Number PE- 5506, on 9/26/13 and the original document is stored at the North Dakota Department of Transportation

Earthwork Values

US 85 Intersection Improvements

US 85, South of US 2

STATE	PROJECT NO.	SECTION NO.	SHEET NO.
ND	SOIA-7-085(092)183	11	3

Station	End Area (SF)				Volume (CY)				Mass Oridinate	
	Topsoil		Embankment		Topsoil		Embankment		Topsoil	Embankment
	Excavation	Fill	Excavation	Fill	Excavation	Fill	Excavation	Fill		
9703+50.00	50.7	43.5	432.9	50.0	102	93	897	128	36	-636
9703+56.59	48.1	38.8	501.1	37.5	12	10	114	14	38	-536
9703+70.42	38.9	29.4	647.8	38.5	22	17	294	24	43	-266
9703+80.02	16.2	17.0	791.3	35.3	10	8	256	17	45	-27
Totals					3750	3705	8250	8277		

This document was originally issued and sealed by Eric Bach, Registration Number PE- 5506, on 9/26/13 and the original document is stored at the North Dakota Department of Transportation

Earthwork Values

US 85 Intersection Improvements

US 85, South of US 2 (Cont.)

STATE	PROJECT NO.	SECTION NO.	SHEET NO.
ND	SOIA-7-085(092)183	11	4

Station	End Area (SF)				Volume (CY)				Mass Oridinate	
	Topsoil		Embankment		Topsoil		Embankment		Topsoil	Embankment
	Excavation	Fill	Excavation	Fill	Excavation	Fill	Excavation	Fill		
9703+16.80	0.0	0.0	0.0	0.0	0	0	0	0	0	0
9703+25.00	54.9	26.4	149.5	288.5	8	4	23	55	4	-32
9703+50.00	74.0	69.3	139.9	526.6	60	44	134	472	20	-370
9703+75.00	31.4	56.3	191.8	387.9	49	58	153	529	11	-746
9703+95.69	77.2	23.4	126.2	324.7	42	31	122	342	22	-966
9703+95.91	77.6	23.4	125.4	325.4	1	0	1	4	23	-969
9704+00.00	82.7	23.4	112.7	346.4	12	4	18	64	31	-1015
9704+04.00	86.0	23.4	103.6	379.6	12	3	16	67	40	-1066
9704+25.00	41.8	41.2	116.3	565.1	50	25	86	459	65	-1439
9704+32.77	45.2	41.8	105.6	587.2	13	12	32	208	66	-1615
9704+50.00	63.8	34.6	46.7	430.4	35	24	48	405	77	-1972
9704+75.00	77.6	32.3	21.2	389.3	65	31	31	475	111	-2416
9705+00.00	0.0	32.5	26.6	321.5	36	30	22	412	117	-2806
9705+04.06	0.0	32.4	26.9	324.2	0	5	4	60	112	-2862
9705+15.91	0.0	32.5	29.8	328.6	0	14	12	180	98	-3030
9705+25.00	0.0	32.4	37.4	336.6	0	11	11	140	87	-3159
9705+30.49	0.0	32.3	40.2	337.9	0	7	8	87	80	-3238
9705+50.00	0.0	32.6	39.9	323.7	0	23	29	299	57	-3508
9705+75.00	0.0	32.3	38.9	327.6	0	30	36	378	27	-3850
9706+00.00	0.0	19.0	22.1	328.1	0	24	28	379	3	-4201
9706+06.09	0.0	19.0	23.7	329.0	0	4	5	93	-1	-4289
9706+25.00	0.0	19.8	25.3	335.0	0	14	17	290	-15	-4562
9706+35.91	0.0	33.7	53.3	343.8	0	11	16	172	-26	-4718
9706+50.00	0.0	33.6	57.9	334.2	0	18	29	222	-44	-4911
9706+50.45	0.0	33.7	58.1	333.9	0	1	1	8	-45	-4918
9706+50.50	0.0	33.7	58.1	333.8	0	0	0	2	-45	-4920
9706+57.59	0.0	34.0	61.8	325.6	0	9	16	109	-54	-5013
9706+75.00	0.0	34.8	74.9	261.0	0	22	44	237	-76	-5206
9707+00.00	0.0	35.6	166.0	177.1	0	33	112	253	-109	-5347
9707+25.00	0.0	34.9	156.1	193.6	0	33	149	214	-142	-5412
9707+50.00	0.0	34.0	128.5	144.9	0	32	132	195	-174	-5475
9707+75.00	0.0	32.9	130.0	76.0	0	31	119	128	-205	-5484
9707+75.52	0.0	32.9	130.5	75.0	0	1	3	3	-206	-5484
9707+95.69	0.0	32.0	312.4	59.3	0	24	165	63	-230	-5382
9708+00.00	0.0	31.9	334.4	57.5	0	5	52	12	-235	-5342
9708+25.00	0.0	33.1	284.9	47.6	0	30	287	62	-265	-5117
9708+50.00	0.0	72.0	898.3	149.9	0	49	548	115	-314	-4684
9708+75.00	0.0	79.8	900.7	233.2	0	70	833	223	-384	-4074
9709+00.00	0.0	68.2	424.5	304.6	0	68	613	312	-452	-3773
9709+25.00	0.0	53.3	79.7	372.9	0	56	233	393	-508	-3933
9709+39.69	0.0	51.1	46.5	397.6	0	28	34	263	-536	-4162
9709+45.69	0.0	51.3	46.9	406.7	0	11	10	112	-547	-4264
9709+50.00	0.0	51.7	47.9	413.9	0	8	8	83	-555	-4339
9709+75.00	0.0	53.9	47.6	426.2	0	49	44	487	-604	-4782
9710+00.00	0.0	56.8	36.0	467.4	0	51	39	518	-655	-5261
9710+17.69	0.0	58.0	38.6	456.5	0	38	24	379	-693	-5616
9710+25.00	0.0	58.6	39.9	448.4	0	16	11	153	-709	-5758
9710+50.00	0.0	59.6	35.6	439.7	0	55	35	514	-764	-6237
9710+75.00	0.0	59.7	27.2	427.5	0	55	29	502	-819	-6710

This document was originally issued and sealed by Eric Bach, Registration Number PE- 5506, on 9/26/13 and the original document is stored at the North Dakota Department of Transportation

Earthwork Values

US 85 Intersection Improvements

US 85, North of US 2

STATE	PROJECT NO.	SECTION NO.	SHEET NO.
ND	SOIA-7-085(092)183	11	5

Station	End Area (SF)				Volume (CY)				Mass Oridinate	
	Topsoil		Embankment		Topsoil		Embankment		Topsoil	Embankment
	Excavation	Fill	Excavation	Fill	Excavation	Fill	Excavation	Fill		
9710+89.69	0.0	60.1	26.3	423.7	0	33	15	289	-852	-6984
9711+00.00	0.0	59.6	27.5	416.8	0	23	10	200	-875	-7174
9711+25.00	0.0	58.2	37.1	392.2	0	55	30	468	-930	-7612
9711+47.10	0.0	56.1	43.9	359.8	0	47	33	385	-977	-7964
9711+50.00	0.0	55.8	44.8	354.6	0	6	5	48	-983	-8007
Totals					383	1366	4515	12522		

This document was originally issued and sealed by Eric Bach, Registration Number PE- 5506, on 9/26/13 and the original document is stored at the North Dakota Department of Transportation

Earthwork Values

US 85 Intersection Improvements

US 85, North of US 2 (Cont.)

STATE	PROJECT NO.	SECTION NO.	SHEET NO.
ND	SOIA-7-085(092)183	11	6

Station	End Area (SF)				Volume (CY)				Mass Oridinate	
	Topsoil		Embankment		Topsoil		Embankment		Topsoil	Embankment
	Excavation	Fill	Excavation	Fill	Excavation	Fill	Excavation	Fill		
775+92.68	38.5	38.5	8.8	11.8	0	0	0	0	0	0
776+00.00	38.1	38.4	8.6	12.6	10	10	2	4	0	-2
776+25.00	36.6	37.7	2.3	19.0	35	35	5	19	0	-16
776+50.00	35.1	37.0	0.8	29.7	33	35	1	29	-2	-44
776+75.00	33.6	36.3	1.7	42.2	32	34	1	42	-4	-85
776+76.00	33.6	36.3	1.7	42.5	1	1	0	3	-4	-88
777+00.00	32.8	36.2	3.7	87.2	29	32	2	73	-7	-159
777+02.22	32.7	36.2	3.8	95.6	3	3	0	10	-7	-169
777+22.22	32.2	36.3	5.6	95.4	24	27	3	89	-10	-255
777+25.00	32.1	36.3	6.5	83.6	3	4	1	12	-11	-266
777+45.61	31.5	36.4	21.6	20.7	24	28	11	50	-15	-305
777+50.00	31.3	36.4	28.4	15.3	5	6	4	4	-16	-305
777+52.31	31.2	36.4	33.8	15.0	3	3	3	2	-16	-304
777+75.00	30.5	36.8	42.3	12.9	26	31	32	15	-21	-287
778+00.00	29.4	37.0	49.7	19.1	28	34	43	19	-27	-263
778+25.00	27.3	36.4	61.5	5.7	26	34	51	14	-35	-226
778+50.00	25.1	35.8	76.6	4.1	24	33	64	7	-44	-169
778+75.00	22.0	35.1	90.7	3.6	22	33	77	5	-55	-97
779+00.00	21.5	34.4	103.8	0.9	20	32	90	3	-67	-10
779+25.00	21.1	34.0	120.7	0.0	20	32	104	0	-79	94
779+50.00	20.5	33.6	127.0	0.1	19	31	115	0	-91	209
779+75.00	20.1	33.3	133.4	1.0	19	31	121	2	-103	328
780+00.00	20.2	33.3	133.7	6.3	19	31	124	4	-115	448
780+25.00	20.2	33.3	123.5	5.8	19	31	119	8	-127	559
780+50.00	19.0	31.8	74.0	10.3	18	30	91	9	-139	641
780+75.00	22.0	31.4	55.1	11.5	19	29	60	13	-149	688
781+00.00	24.4	30.9	43.0	9.9	21	29	45	13	-157	720
781+25.00	25.2	30.3	43.3	7.7	23	28	40	10	-162	750
781+50.00	16.1	29.6	73.0	6.1	19	28	54	8	-171	796
781+75.00	6.0	29.0	85.3	6.3	10	27	73	8	-188	861
782+00.00	15.5	28.4	66.9	13.7	10	27	70	12	-205	919
782+25.00	0.0	27.8	69.9	8.6	7	26	63	13	-224	969
782+50.00	18.0	27.2	48.8	5.5	8	25	55	9	-241	1015
782+56.75	34.8	39.8	30.6	12.7	7	8	10	3	-242	1022
782+75.00	38.5	39.0	5.8	38.7	25	27	12	22	-244	1012
782+78.81	39.1	38.9	3.1	40.1	5	5	1	8	-244	1005
783+00.00	13.4	12.1	1.5	21.9	21	20	2	30	-243	977
783+25.00	13.2	11.8	1.5	24.2	12	11	1	27	-242	951
783+50.00	12.9	11.4	1.6	28.3	12	11	1	30	-241	922
783+75.00	12.5	11.2	1.3	30.7	12	10	1	34	-239	889
784+00.00	12.3	10.8	1.2	31.5	11	10	1	37	-238	853
784+25.00	11.9	10.4	1.4	30.2	11	10	1	37	-237	817
784+30.97	21.6	23.0	4.0	62.0	4	4	1	13	-237	805
784+50.00	25.1	22.7	1.7	63.7	16	16	2	55	-237	752
784+75.00	24.7	22.3	2.0	60.4	23	21	2	72	-235	682
785+00.00	24.0	21.7	2.4	54.3	23	20	2	67	-232	617
785+25.00	23.2	21.0	2.7	50.6	22	20	2	62	-230	557
785+50.00	22.8	20.0	3.1	46.5	21	19	3	57	-228	503
785+75.00	22.5	18.9	4.2	43.3	21	18	3	53	-225	453

This document was originally issued and sealed by Eric Bach, Registration Number PE- 5506, on 9/26/13 and the original document is stored at the North Dakota Department of Transportation

Earthwork Values

US 85 Intersection Improvements

US 2 WB

STATE	PROJECT NO.	SECTION NO.	SHEET NO.
ND	SOIA-7-085(092)183	11	7

Station	End Area (SF)				Volume (CY)				Mass Oridinate	
	Topsoil		Embankment		Topsoil		Embankment		Topsoil	Embankment
	Excavation	Fill	Excavation	Fill	Excavation	Fill	Excavation	Fill		
785+81.70	22.5	20.4	21.2	45.7	6	5	3	14	-224	442
786+00.00	22.6	19.8	21.4	45.9	15	14	14	39	-223	417
786+25.00	22.7	19.2	20.3	47.2	21	18	19	54	-220	382
786+46.07	23.1	18.5	17.8	57.1	18	15	15	52	-217	345
786+48.16	11.0	6.3	17.5	10.4	1	1	1	4	-217	342
786+50.00	11.0	6.2	17.2	10.5	1	0	1	2	-216	341
786+56.25	11.0	5.8	16.2	11.0	3	1	4	3	-214	342
786+73.04	11.1	4.4	12.9	13.2	7	3	9	9	-210	342
786+75.00	11.1	4.2	12.3	13.6	1	0	1	2	-209	341
786+86.97	10.7	0.0	9.6	12.3	5	1	5	8	-205	338
786+91.74	8.4	0.0	9.2	8.0	2	0	2	3	-203	337
787+00.00	8.0	0.0	14.6	5.1	3	0	4	3	-200	338
787+25.00	0.0	0.0	13.4	5.5	4	0	13	7	-196	344
787+50.00	0.0	0.0	16.1	3.9	0	0	14	5	-196	353
787+75.00	0.0	0.0	109.8	3.3	0	0	58	4	-196	407
788+00.00	0.0	0.0	107.7	2.9	0	0	101	4	-196	504
788+25.00	0.0	0.0	63.0	3.3	0	0	79	4	-196	579
788+39.98	33.1	3.3	28.4	22.3	9	1	25	9	-188	595
788+40.51	35.2	1.3	33.9	24.6	1	0	1	0	-187	596
788+50.00	30.6	3.8	5.7	74.7	12	1	7	22	-176	581
788+75.00	31.2	5.8	20.5	110.0	29	4	12	108	-151	485
788+85.65	31.5	6.4	22.4	112.4	12	2	8	55	-141	438
788+93.64	31.6	6.8	23.7	113.2	9	2	7	42	-134	403
789+00.00	31.5	7.1	24.6	113.2	7	2	6	34	-129	375
789+00.21	46.1	23.0	25.1	141.6	0	0	0	2	-129	373
789+10.09	45.9	23.4	26.7	140.2	17	8	9	65	-120	317
789+25.00	46.1	23.8	28.4	142.4	25	13	15	98	-108	234
789+50.00	45.6	23.8	31.3	142.8	42	22	28	165	-88	97
789+50.02	45.5	23.8	31.3	142.6	0	0	0	0	-88	97
789+75.00	45.7	23.7	5.7	154.8	42	22	17	173	-68	-59
790+00.00	45.1	23.7	5.0	156.0	42	22	5	180	-48	-234
790+25.00	45.0	23.9	4.4	157.2	42	22	4	182	-28	-412
790+50.00	45.5	24.9	4.1	163.4	42	23	4	185	-9	-593
790+75.00	44.9	24.9	4.0	161.8	42	23	4	189	10	-778
791+00.00	43.7	24.2	4.4	147.9	41	23	4	179	28	-953
791+25.00	43.0	23.9	4.9	136.3	40	22	4	165	46	-1114
791+50.00	42.8	24.0	4.7	132.5	40	22	4	155	64	-1265
791+57.54	42.7	23.8	6.2	124.7	12	7	2	45	69	-1308
791+75.00	42.9	23.9	7.8	124.9	28	15	5	102	82	-1405
791+81.30	43.3	25.1	17.3	135.7	10	6	3	38	86	-1440
792+00.00	44.3	25.4	17.0	140.9	30	17	12	120	99	-1548
792+13.41	45.0	25.7	15.7	142.7	22	13	8	88	108	-1628
792+25.00	45.6	25.8	14.8	144.7	19	11	7	78	116	-1699
792+47.20	45.3	24.3	3.4	138.2	37	21	7	145	132	-1837
792+50.00	45.3	24.2	3.4	138.7	5	3	0	18	134	-1855
792+75.00	44.6	23.6	2.1	149.4	42	22	3	167	154	-2019
792+98.36	45.3	23.7	2.2	159.0	39	20	2	167	173	-2184
793+00.00	45.4	23.7	2.3	159.3	3	1	0	13	175	-2197
793+25.00	45.7	24.0	2.5	165.9	42	22	2	189	195	-2384

This document was originally issued and sealed by Eric Bach, Registration Number PE- 5506, on 9/26/13 and the original document is stored at the North Dakota Department of Transportation

Earthwork Values

US 85 Intersection Improvements

US 2 WB (Cont.)

STATE	PROJECT NO.	SECTION NO.	SHEET NO.
ND	SOIA-7-085(092)183	11	8

Station	End Area (SF)				Volume (CY)				Mass Oridinate	
	Topsoil		Embankment		Topsoil		Embankment		Topsoil	Embankment
	Excavation	Fill	Excavation	Fill	Excavation	Fill	Excavation	Fill		
793+50.00	45.4	24.2	2.3	169.1	42	22	2	194	215	-2576
793+75.00	44.9	38.2	2.0	172.1	42	29	2	198	228	-2772
794+00.00	44.7	24.6	1.8	179.8	41	29	2	204	240	-2974
794+25.00	44.2	24.6	1.9	177.2	41	23	2	207	258	-3179
794+26.18	44.2	24.7	2.0	177.3	2	1	0	10	259	-3189
794+35.21	43.8	24.5	2.1	175.0	15	8	1	74	266	-3262
794+50.00	43.4	24.9	1.8	174.9	24	14	1	120	276	-3381
794+75.00	42.7	25.5	2.0	166.3	40	23	2	198	293	-3577
795+00.00	40.9	25.4	2.8	146.0	39	24	2	182	308	-3757
795+25.00	38.7	24.7	3.7	126.6	37	23	3	158	322	-3912
795+25.21	38.7	24.7	3.7	126.4	0	0	0	2	322	-3914
795+30.00	59.6	44.7	24.1	127.1	9	6	2	28	325	-3940
795+50.00	59.9	44.8	27.8	121.7	44	33	19	115	336	-4036
795+75.00	61.6	45.1	26.8	132.0	56	42	25	147	350	-4158
795+78.09	81.5	56.1	81.3	133.4	8	6	6	19	352	-4171
795+82.09	82.5	55.7	83.9	133.9	12	8	12	25	356	-4184
796+00.00	62.1	46.1	25.4	132.3	48	34	36	110	370	-4258
796+15.21	61.7	46.2	16.7	132.1	35	26	12	93	379	-4339
796+20.00	61.3	47.1	13.0	106.6	11	8	3	27	382	-4363
796+25.00	36.4	25.0	2.4	104.5	9	7	1	25	384	-4387
796+50.00	35.2	24.6	2.4	95.8	33	23	2	117	394	-4502
796+75.00	33.3	23.5	2.9	81.2	32	22	2	103	404	-4603
797+00.00	29.6	20.6	2.5	68.1	29	20	3	87	413	-4687
797+25.00	26.6	18.5	2.2	61.1	26	18	2	75	421	-4760
797+50.00	24.5	17.2	2.2	55.5	24	17	2	68	428	-4826
797+75.00	18.3	11.9	1.8	42.7	20	13	2	57	435	-4881
798+00.00	18.5	13.0	2.2	47.2	17	12	2	53	440	-4932
798+25.00	17.9	13.2	2.2	58.0	17	12	2	62	445	-4992
798+25.21	17.9	13.2	2.2	58.0	0	0	0	0	445	-4992
798+50.00	17.1	13.1	2.1	53.9	16	12	2	64	449	-5054
798+75.00	16.6	13.5	2.1	50.3	16	12	2	60	453	-5112
799+00.00	15.8	13.5	2.5	44.0	15	13	2	55	455	-5165
799+25.00	14.9	13.4	2.8	37.9	14	12	2	48	457	-5211
799+50.00	14.1	13.4	2.8	34.5	13	12	3	43	458	-5251
799+70.28	11.2	11.2	0.0	10.6	10	9	1	22	459	-5272
799+75.00	11.1	11.0	0.0	10.6	2	2	0	3	459	-5275
800+00.00	11.0	11.0	0.0	11.0	10	10	0	13	459	-5288
800+25.00	10.8	10.8	0.0	12.4	10	10	0	14	459	-5302
800+50.00	10.5	10.5	0.0	11.2	10	10	0	14	459	-5316
800+75.00	10.2	10.2	0.0	9.7	10	10	0	13	459	-5329
801+00.00	9.4	9.4	0.0	6.2	9	9	0	9	459	-5338
801+25.00	8.7	8.7	0.0	2.5	8	8	0	5	459	-5343
801+50.00	8.8	8.8	0.0	3.5	8	8	0	4	459	-5347
801+75.00	8.4	0.0	0.0	0.0	8	4	0	3	463	-5350
802+00.00	7.9	0.0	0.0	0.0	8	0	0	0	471	-5350
802+25.00	1.7	0.0	0.0	0.0	4	0	0	0	475	-5350
802+50.00	0.6	0.0	0.0	0.0	1	0	0	0	476	-5350
802+65.21	0.0	0.0	0.0	0.0	0	0	0	0	476	-5350
Totals					2620	2144	2289	7639		

This document was originally issued and sealed by Eric Bach, Registration Number PE- 5506, on 9/26/13 and the original document is stored at the North Dakota Department of Transportation

Earthwork Values

US 85 Intersection Improvements

US 2 WB (Cont.)

STATE	PROJECT NO.	SECTION NO.	SHEET NO.
ND	SOIA-7-085(092)183	11	9

Station	End Area (SF)				Volume (CY)				Mass Oridinate	
	Topsoil		Embankment		Topsoil		Embankment		Topsoil	Embankment
	Excavation	Fill	Excavation	Fill	Excavation	Fill	Excavation	Fill		
772+16.62	0.0	0.0	0.0	0.0	0	0	0	0	0	0
772+25.00	1.8	1.8	0.0	0.1	0	0	0	0	0	0
772+50.00	6.2	6.2	0.0	1.5	4	4	0	2	0	-2
772+75.00	6.0	6.0	0.0	0.8	6	6	0	2	0	-4
773+00.00	6.3	6.3	0.0	1.2	6	6	0	2	0	-6
773+25.00	7.6	7.6	0.0	2.3	6	6	0	3	0	-9
773+50.00	10.8	10.8	0.0	2.7	9	9	0	3	0	-12
773+75.00	11.9	11.9	0.0	6.1	11	11	0	5	0	-17
774+00.00	12.0	12.0	0.0	7.0	11	11	0	8	0	-25
774+25.00	12.2	12.2	0.0	8.1	11	11	0	9	0	-34
774+50.00	27.8	28.3	3.0	9.8	19	19	1	10	0	-43
774+75.00	28.0	28.5	1.7	10.6	26	26	2	12	0	-53
774+86.61	28.2	28.6	0.8	12.5	12	12	1	7	0	-59
775+00.00	27.9	28.7	0.2	16.6	14	14	0	9	0	-68
775+25.00	27.1	28.9	1.7	15.0	25	27	1	19	-2	-86
775+38.61	26.6	29.1	3.2	11.8	14	15	1	9	-3	-94
775+50.00	27.1	30.1	4.7	9.0	11	12	2	5	-4	-97
775+50.55	27.1	30.2	7.0	18.6	1	1	0	0	-4	-97
775+75.00	28.5	31.9	7.9	16.3	25	28	7	20	-7	-110
776+00.00	29.3	32.8	10.9	15.3	27	30	9	19	-10	-120
776+25.00	28.0	31.4	10.9	15.9	27	30	10	18	-13	-128
776+50.00	29.0	32.6	8.4	26.9	26	30	9	25	-17	-144
776+75.00	29.7	33.0	7.8	37.0	27	30	8	38	-20	-174
776+76.00	29.7	33.0	7.9	38.5	1	1	0	2	-20	-176
776+88.86	29.3	32.3	7.7	61.1	14	16	4	30	-22	-202
777+00.00	30.0	32.5	7.5	61.2	12	13	3	32	-23	-231
777+08.86	30.5	32.8	7.3	63.1	10	11	2	25	-24	-254
777+25.00	31.0	32.7	7.3	38.3	18	20	4	38	-26	-288
777+48.61	36.8	37.4	30.2	51.0	30	31	16	49	-27	-321
777+50.00	36.8	37.4	30.3	51.6	2	2	2	4	-27	-323
777+75.00	37.3	37.0	33.4	54.3	34	34	30	62	-27	-355
777+83.83	37.5	36.9	34.6	52.9	12	12	11	23	-27	-367
778+00.00	37.6	36.5	35.4	50.3	22	22	21	39	-27	-385
778+25.00	39.0	37.3	35.5	58.1	35	34	33	63	-26	-415
778+50.00	39.9	37.5	37.4	62.8	37	35	34	70	-24	-451
778+75.00	39.9	36.8	39.0	63.3	37	34	35	73	-21	-489
779+00.00	39.3	35.4	41.8	61.6	37	33	37	73	-17	-525
779+08.47	39.0	34.8	43.3	61.6	12	11	13	24	-16	-536
779+10.55	38.8	34.6	43.6	61.7	3	3	3	7	-16	-540
779+25.00	38.9	34.4	45.9	61.7	21	18	24	42	-13	-558
779+50.00	39.0	33.9	48.7	57.4	36	32	44	69	-9	-583
779+75.00	40.3	45.5	49.3	53.4	37	37	45	64	-9	-602
779+98.47	40.0	34.4	51.6	46.8	35	35	44	55	-9	-613
780+00.00	40.0	34.3	50.3	45.9	2	2	3	4	-9	-614
780+25.00	37.2	35.1	64.3	34.1	36	32	53	47	-5	-608
780+50.00	29.5	36.2	118.0	30.6	31	33	84	38	-7	-562
780+75.00	35.3	36.6	137.4	38.1	30	34	118	40	-11	-484
780+88.47	40.6	36.9	120.1	65.0	19	18	64	33	-10	-453
781+00.00	47.2	37.1	105.9	85.5	19	16	48	40	-7	-445

This document was originally issued and sealed by Eric Bach, Registration Number PE- 5506, on 9/26/13 and the original document is stored at the North Dakota Department of Transportation

Earthwork Values

US 85 Intersection Improvements

US 2 EB

STATE	PROJECT NO.	SECTION NO.	SHEET NO.
ND	SOIA-7-085(092)183	11	10

Station	End Area (SF)				Volume (CY)				Mass Oridinate	
	Topsoil		Embankment		Topsoil		Embankment		Topsoil	Embankment
	Excavation	Fill	Excavation	Fill	Excavation	Fill	Excavation	Fill		
781+04.92	91.6	65.2	137.8	93.8	13	9	22	20	-3	-443
781+25.00	97.6	64.4	121.8	96.6	70	48	97	89	19	-435
781+50.00	101.9	67.6	124.0	88.0	92	61	114	107	50	-428
781+75.00	103.1	68.6	180.9	71.0	95	63	141	93	82	-380
781+78.31	103.1	68.6	205.4	70.7	13	8	24	12	87	-368
782+00.00	88.1	68.7	473.3	41.1	77	55	273	57	109	-152
782+24.06	22.0	71.1	503.8	99.8	49	62	435	79	96	204
782+25.00	22.1	71.1	503.5	101.0	1	2	18	4	95	218
782+50.00	79.0	71.4	483.5	99.7	47	66	457	117	76	558
782+75.00	86.8	69.1	291.8	70.1	77	65	359	99	88	818
783+00.00	74.6	54.1	177.4	50.3	75	57	217	70	106	965
783+20.59	65.0	43.8	156.9	43.5	53	37	127	45	122	1047
783+25.00	62.8	43.2	150.6	43.9	10	7	25	9	125	1063
783+50.00	63.6	43.1	152.5	48.8	59	40	140	54	144	1149
783+59.67	91.0	43.0	156.3	50.2	28	15	55	23	157	1181
783+75.00	64.6	43.1	163.5	55.4	44	24	91	38	177	1234
784+00.00	65.5	43.1	170.3	68.0	60	40	155	72	197	1317
784+25.00	66.2	42.9	172.9	77.3	61	40	159	84	218	1392
784+50.00	66.9	42.7	166.2	85.9	62	40	157	95	240	1454
784+53.23	94.1	81.7	174.7	138.8	10	7	20	17	243	1457
784+75.00	94.7	81.4	239.5	99.2	76	66	167	120	253	1504
785+00.00	95.1	80.9	363.4	114.3	88	75	279	124	266	1659
785+25.00	95.7	80.6	491.0	125.7	88	75	396	139	279	1916
785+50.00	96.2	80.2	629.8	135.1	89	74	519	152	294	2283
785+75.00	96.6	79.8	742.4	148.9	89	74	635	164	309	2754
785+81.71	96.8	79.7	768.4	152.2	24	20	188	47	313	2895
785+97.62	97.0	79.4	802.7	153.9	57	47	463	113	323	3245
786+00.00	96.9	79.4	806.7	154.7	9	7	71	18	325	3298
786+05.00	96.8	79.2	808.4	157.3	18	15	150	37	328	3411
786+25.00	96.8	78.6	849.5	163.8	72	58	614	149	342	3876
786+48.47	36.5	4.7	125.2	170.8	58	36	424	182	364	4118
786+50.00	36.5	4.6	125.3	172.2	2	0	7	13	366	4112
786+61.59	36.8	4.5	126.1	183.6	16	2	54	95	380	4071
786+71.42	37.0	4.4	125.4	197.9	13	2	46	87	391	4030
786+75.00	37.1	4.3	125.1	207.8	5	1	17	34	395	4013
786+85.64	42.4	3.7	127.1	184.0	16	2	50	97	409	3966
786+90.42	36.7	0.0	125.0	170.6	7	0	22	39	416	3949
787+00.00	36.7	0.0	127.0	141.0	13	0	45	69	429	3925
787+10.63	36.5	0.0	134.2	74.8	14	0	51	53	443	3923
787+25.00	0.0	0.0	148.2	4.5	10	0	75	27	453	3971
787+50.00	0.0	0.0	214.7	0.0	0	0	168	3	453	4136
787+75.00	0.0	0.0	144.7	0.0	0	0	166	0	453	4302
788+00.00	0.0	0.0	145.8	0.0	0	0	134	0	453	4436
788+25.00	0.0	0.0	139.0	0.0	0	0	132	0	453	4568
788+34.54	8.3	0.0	139.3	0.0	1	0	49	0	454	4617
788+39.50	9.6	0.0	131.1	0.1	2	0	25	0	456	4642
788+40.04	19.5	9.2	130.5	11.8	0	0	3	0	456	4645
788+50.00	18.7	12.9	126.4	22.1	7	4	47	8	459	4684
788+58.50	17.1	12.7	125.4	25.4	6	4	40	9	461	4715

This document was originally issued and sealed by Eric Bach, Registration Number PE- 5506, on 9/26/13 and the original document is stored at the North Dakota Department of Transportation

Earthwork Values

US 85 Intersection Improvements

US 2 EB (Cont.)

STATE	PROJECT NO.	SECTION NO.	SHEET NO.
ND	SOIA-7-085(092)183	11	11

Station	End Area (SF)				Volume (CY)				Mass Oridinate	
	Topsoil		Embankment		Topsoil		Embankment		Topsoil	Embankment
	Excavation	Fill	Excavation	Fill	Excavation	Fill	Excavation	Fill		
788+75.00	14.2	11.7	129.0	18.8	10	7	78	17	464	4776
788+84.86	12.9	11.4	131.3	14.9	5	4	48	8	465	4816
789+00.00	11.6	11.1	135.1	10.3	7	6	75	9	466	4882
789+25.00	9.9	10.4	141.6	4.9	10	10	128	9	466	5001
789+38.33	25.3	24.4	207.3	32.2	9	9	86	12	466	5075
789+49.23	25.1	24.2	202.1	27.5	10	10	83	15	466	5143
789+50.00	25.1	24.2	201.7	27.1	1	1	6	2	466	5147
789+75.00	14.7	14.5	196.2	8.1	18	18	184	20	466	5311
789+98.10	15.1	16.1	193.0	8.0	13	13	166	9	466	5468
790+00.00	15.1	16.1	192.5	8.0	1	1	14	2	466	5480
790+05.94	15.1	16.2	190.9	7.9	3	4	42	3	465	5519
790+25.00	14.4	15.9	179.6	8.0	10	11	131	8	464	5642
790+50.00	13.9	15.7	167.2	8.6	13	15	161	10	462	5793
790+75.00	14.3	16.5	157.6	9.0	13	15	150	10	460	5933
791+00.00	15.0	17.6	150.6	9.3	14	16	143	10	458	6066
791+10.00	29.9	32.5	153.3	10.1	8	9	56	5	457	6117
791+25.00	30.2	32.9	154.3	10.9	17	18	85	8	456	6194
791+50.00	30.8	33.4	147.1	11.9	28	31	140	14	453	6320
791+75.00	31.1	33.9	144.2	12.1	29	31	135	14	451	6441
791+97.74	31.6	34.5	139.6	12.2	26	29	119	13	448	6547
792+00.00	31.6	34.6	138.7	12.1	3	3	12	2	448	6557
792+25.00	31.9	34.7	128.2	12.0	29	32	124	14	445	6667
792+50.00	32.3	34.7	113.4	13.2	30	32	112	15	443	6764
792+60.00	32.6	34.6	105.0	14.0	12	13	40	7	442	6797
792+75.00	16.8	18.4	94.7	14.6	14	15	55	10	441	6842
793+00.00	25.9	26.4	84.4	25.5	20	21	83	24	440	6901
793+25.00	27.0	27.0	71.8	34.5	24	25	72	35	439	6938
793+50.00	28.4	28.0	62.4	45.3	26	25	62	47	440	6953
793+75.00	29.9	28.9	56.7	55.7	27	26	55	59	441	6949
794+00.00	31.3	29.6	53.3	64.8	28	27	51	70	442	6930
794+25.00	32.2	30.0	50.3	71.5	29	28	48	79	443	6899
794+50.00	32.7	30.3	45.9	79.5	30	28	45	88	445	6856
794+75.00	33.4	30.9	39.6	82.6	31	28	40	94	448	6802
795+00.00	33.6	31.0	36.0	83.0	31	29	35	97	450	6740
795+25.00	33.4	30.8	32.8	82.0	31	29	32	95	452	6677
795+50.00	33.3	30.9	29.7	83.2	31	29	29	95	454	6611
795+75.00	35.0	32.7	18.5	101.3	32	29	22	107	457	6526
795+85.67	20.4	17.0	0.7	67.6	11	10	4	42	458	6488
796+00.00	20.3	16.9	0.7	68.4	11	9	0	45	460	6443
796+25.00	19.9	16.6	0.8	68.2	19	16	1	79	463	6365
796+35.67	20.0	16.7	0.5	71.0	8	7	0	35	464	6330
796+50.00	20.0	16.7	0.5	72.1	11	9	0	48	466	6282
796+75.00	20.0	16.7	0.3	73.4	19	15	0	84	470	6198
797+00.00	19.7	16.4	0.2	70.1	18	15	0	83	473	6115
797+25.00	19.7	16.4	0.4	65.5	18	15	0	79	476	6036
797+50.00	19.8	16.5	0.8	64.3	18	15	1	75	479	5962
797+75.00	20.1	16.7	0.8	70.7	18	15	1	78	482	5885
797+76.00	20.1	16.7	0.7	70.4	1	1	0	4	482	5881
798+00.00	20.1	16.7	0.5	68.3	18	15	1	78	485	5804

This document was originally issued and sealed by Eric Bach, Registration Number PE- 5506, on 9/26/13 and the original document is stored at the North Dakota Department of Transportation

Earthwork Values

US 85 Intersection Improvements

US 2 EB (Cont.)

STATE	PROJECT NO.	SECTION NO.	SHEET NO.
ND	SOIA-7-085(092)183	11	12

Station	End Area (SF)				Volume (CY)				Mass Oridinate	
	Topsoil		Embankment		Topsoil		Embankment		Topsoil	Embankment
	Excavation	Fill	Excavation	Fill	Excavation	Fill	Excavation	Fill		
798+25.00	19.9	16.6	0.4	69.8	19	15	0	80	489	5724
798+50.00	19.8	16.6	0.4	71.6	18	15	0	82	492	5642
798+69.31	19.7	16.6	0.3	72.0	14	12	0	64	494	5578
798+75.00	19.7	16.6	0.3	71.9	4	4	0	19	494	5559
798+98.10	19.7	16.6	0.1	71.2	17	14	0	77	497	5482
799+00.00	19.7	16.6	0.1	71.0	1	1	0	7	497	5475
799+25.00	19.6	16.7	0.0	71.3	18	15	0	83	500	5392
799+50.00	19.4	16.7	0.0	70.1	18	15	0	82	503	5310
799+75.00	19.1	16.8	0.0	66.5	18	16	0	79	505	5231
800+00.00	18.9	16.8	0.1	62.5	18	16	0	75	507	5156
800+25.00	18.7	16.8	0.1	57.8	17	16	0	70	508	5086
800+50.00	18.1	16.4	0.3	51.1	17	15	0	63	510	5023
800+75.00	17.6	16.2	0.5	46.0	17	15	0	57	512	4966
801+00.00	17.2	16.0	0.4	43.0	16	15	0	52	513	4914
801+25.00	16.7	15.8	0.1	41.3	16	15	0	49	514	4865
801+31.62	16.7	15.8	0.1	41.6	4	4	0	13	514	4852
Totals					3751	3237	11904	7052		

This document was originally issued and sealed by Eric Bach, Registration Number PE- 5506, on 9/26/13 and the original document is stored at the North Dakota Department of Transportation

Earthwork Values

US 85 Intersection Improvements

US 2 EB (Cont.)

STATE	PROJECT NO.	SECTION NO.	SHEET NO.
ND	SOIA-7-085(092)183	20	1

Basis of Estimate				(1) Gravel Road		(2) Private Drive		(3) Gravel Approach		Total
Number of Locations				1		1		3		
Spec	Code	Description	Unit	Total	Average	Total	Average	Total	Average	
302	0100	Salvaged Base Course @ 1.875 Ton/CY	Ton	225.0	225.0	86.0	86.0	177.0	59.0	488
401	0100	MC70 or 250 Liquid Asphalt @ 0.25 Gal/SY (one application on base course)	Gal	31.0	31.0	30.0	30.0	0.0	0.0	61
401	0150	SS-1h or CSS-1h or MS1 Emuls Asphalt @ 0.05 Gal/SY (bottom lift)	Gal	6.5	6.5	6.0	6.0	0.0	0.0	13
401	0150	SS-1h or CSS-1h or MS1 Emuls Asphalt @ 0.05 Gal/SY (top lift)	Gal	6.5	6.5	6.0	6.0	0.0	0.0	13
410	0215	Superpave FAA 45 @ 2 Ton/CY	Ton	38.0	38.0	36.0	36.0	0.0	0.0	74
410	0445	PG 58-28 Asphalt Cement @ 6.0% (bottom lift)	Ton	1.0	1.0	1.0	1.0	0.0	0.0	2
410	0460	PG 64-28 Asphalt Cement @ 6.0% (top 2 lifts)	Ton	2.0	2.0	2.0	2.0	0.0	0.0	4

Notes:

1. Actual HBP paving and salvaged base locations may vary in the field, as approved by the Engineer.
2. Quantity totals have been included in the bid items of the "Estimate of Quantities" of the plans.
3. Approximately 50 tons of salvaged base have been provided to fill in around the radii. This material will be required when sloughs are steeper than 4:1, see B-B.

① See Cross Sections. Provide a 7% maximum cross slope.

② Place Salvaged Base Course at the thickness required to achieve the proposed approach slope specified on the cross sections.

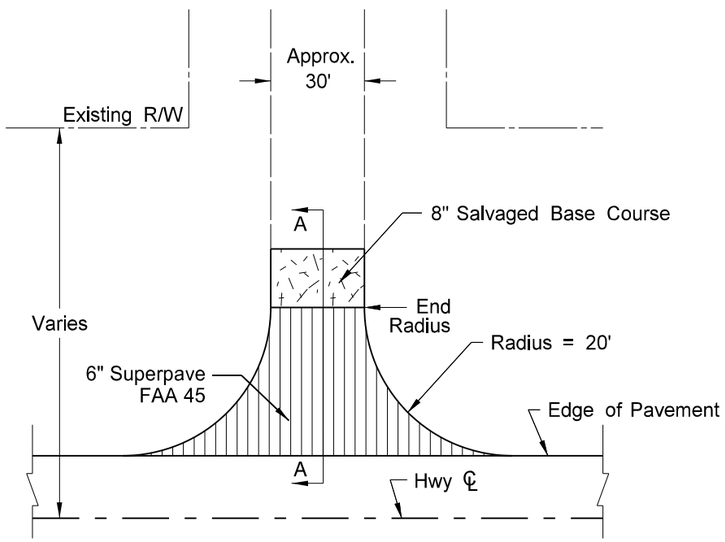

(1) Gravel Road Approach
Sta 9704+04 RT (PR85) - 6" Superpave FAA 45, 8" Salvaged Base

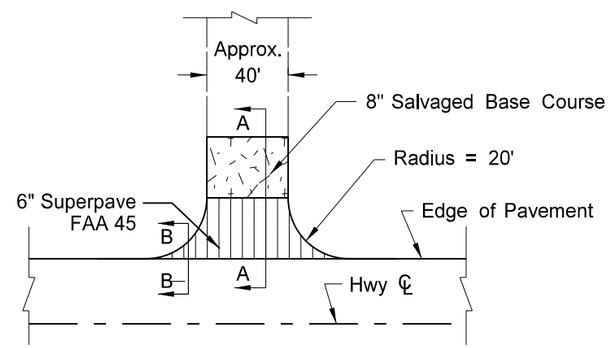

(2) Private Drive Approach
Sta 9706+06 LT (PR85)

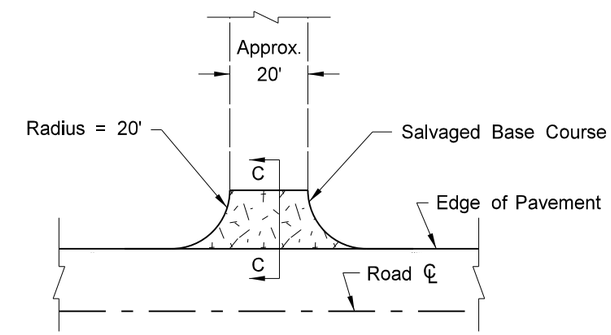

(3) Gravel Approach
Country Lane - 8" Salvaged Base
Sta 781+92 LT (PR2WB) - 12" Salvaged Base
Sta 786+62 LT (PR2WB) - 12" Salvaged Base

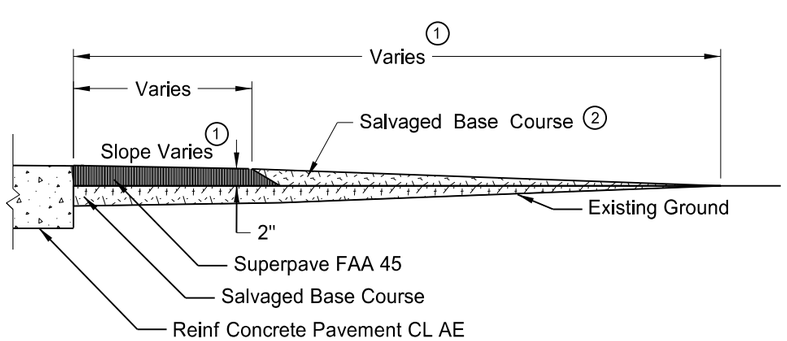

Section A-A

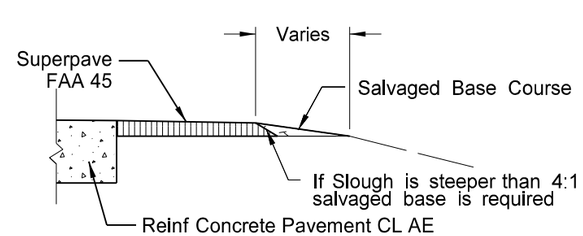

Section B-B

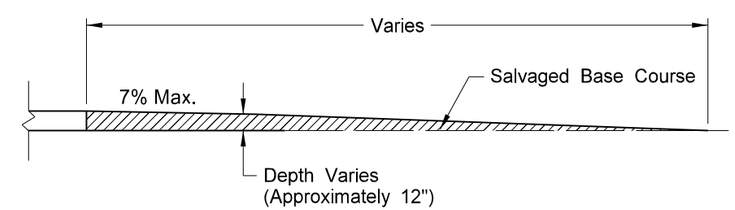

Section C-C

This document was originally issued and sealed by Eric Bach, Registration Number PE- 5506 , on 9/12/13 and the original document is stored at the North Dakota Department of Transportation

General Details

US 85 Intersection Improvements

Approach Paving Details

STATE	PROJECT NO.	SECTION NO.	SHEET NO.
ND	SOIA-7-085(092)183	20	2

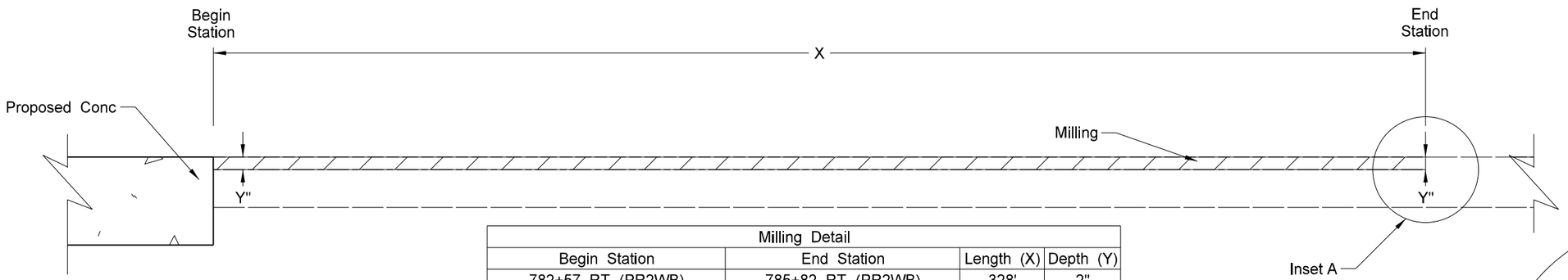

Milling Detail			
Begin Station	End Station	Length (X)	Depth (Y)
782+57 RT (PR2WB)	785+82 RT (PR2WB)	328'	2"
784+31 LT (PR2WB)	785+82 LT (PR2WB)	151'	2"
789+50 LT (PR2WB)	791+81 LT (PR2WB)	231'	2"
792+47 LT (PR2WB)	796+15 LT (PR2WB)	368'	2"
795+86 RT (PR2EB)	801+32 RT (PR2EB)	546'	2"

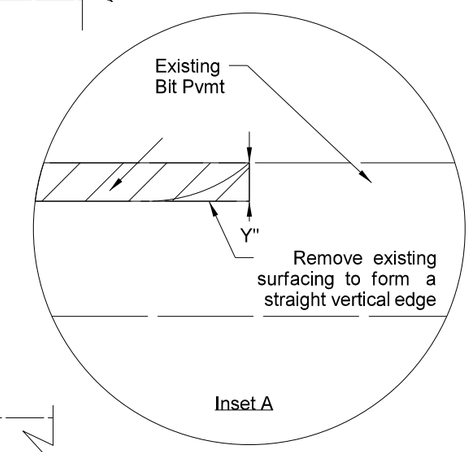

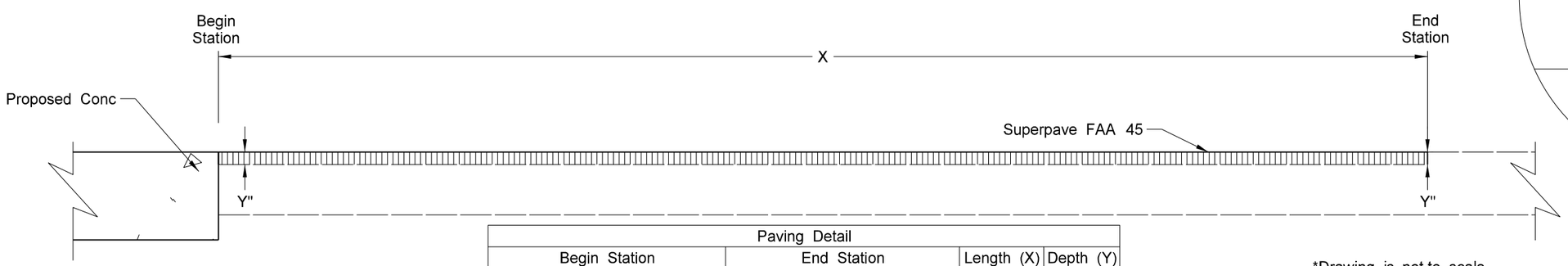

Paving Detail			
Begin Station	End Station	Length (X)	Depth (Y)
782+57 RT (PR2WB)	785+82 RT (PR2WB)	328'	2"
784+31 LT (PR2WB)	785+82 LT (PR2WB)	151'	2"
789+50 LT (PR2WB)	791+81 LT (PR2WB)	231'	2"
792+47 LT (PR2WB)	796+15 LT (PR2WB)	368'	2"
795+86 RT (PR2EB)	801+32 RT (PR2EB)	546'	2"

*Drawing is not to scale

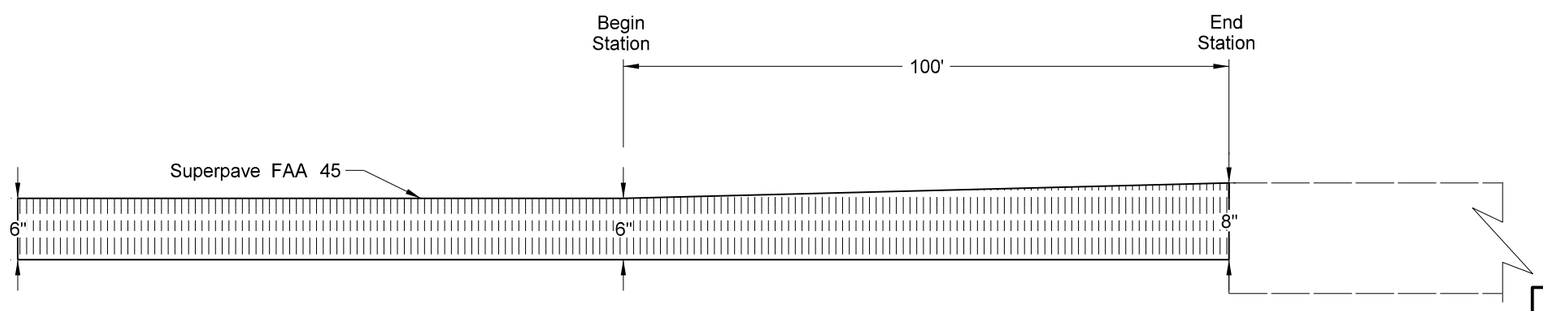

Asphalt Depth Transistion	
Begin Station	End Station
9693+97.18	9692+97.18
9697+27.18	9698+27.18

This document was originally issued and sealed by Eric Bach, Registration Number PE- 5506, on 9/26/13 and the original document is stored at the North Dakota Department of Transportation

General Details

US 85 Intersection Improvements

Milling and Paving Transitions

STATE	PROJECT NO.	SECTION NO.	SHEET NO.
ND	SOIA-7-085(092)183	20	3

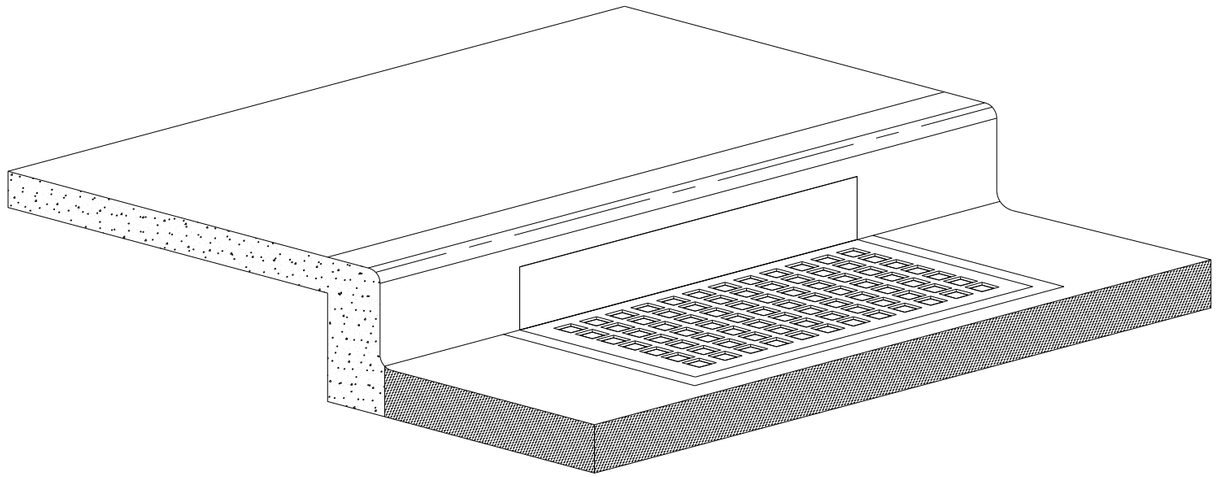

708	1500	Inlet Protection - Special		
		Project Limits	21	EA
708	1541	Remove Inlet Protection - Special		
		Project Limits	21	EA

Inlet Protection Device

Installation Notes:

1. Place device tightly against drain opening and cover entire grate. The device should extend at least 2 inches past grate toward street.

2. Overlap the segments at longer openings.

3. Anchor the device so that water cannot flow behind it.

General Notes:

1. Inlet Protection shall be maintained or replaced at the direction of the engineer.

2. Manufactured alternatives may be substituted at the direction of the engineer.

3. When removing or maintaining inlet protection, care shall be taken so that fabric and sediment does not fall into the inlet. Any material falling into the inlet shall be removed immediately.

4. Inlet protection is to be used (and reused) as needed to prevent material from entering inlets as the work progresses through the project.

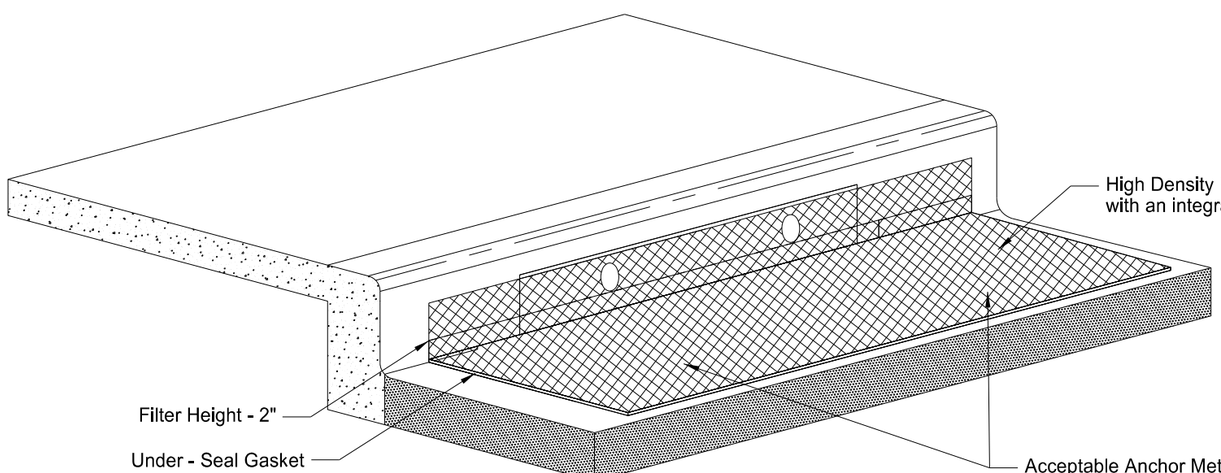

Acceptable Anchor Method: Fasten to inlet casting grate with a UV/Weather Resistant Plastic Cable Zip Ties - 16 to 24 in. Install zip ties at each corner of the inlet near the perimeter and two additional zip ties near the middle of the casting. Punch hole through filter and run cable tie downward around grate and back up to fasten.

This document was originally issued and sealed by Eric Bach, Registration Number PE- 5506, on 10/1/13 and the original document is stored at the North Dakota Department of Transportation

General Details

US 85 Intersection Improvements

Inlet Protection Device

STATE	PROJECT NO.	SECTION NO.	SHEET NO.
ND	SOIA-7-085(092)183	20	4

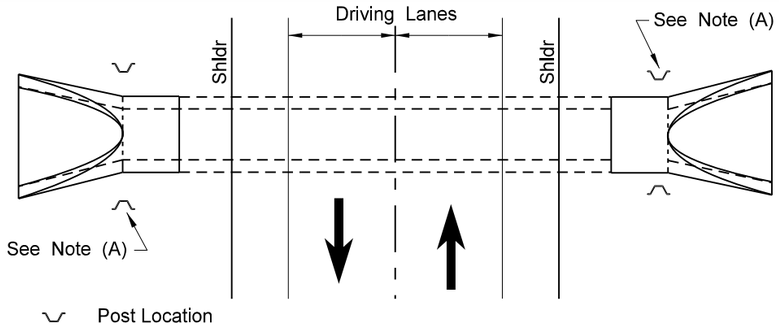

TWO-LANE HIGHWAY

(A) Additional marker shall be installed where multiple pipe installations have a width of greater than 10'.

754	0805	Object Marker - Culverts		
PR85		Sta 9692+99 - 77' RT	1	EA
		Sta 9706+58 - 66' LT	1	EA
		Sta 9711+39 - CL	1	EA
		Sta 9712+80 - 25' LT	1	EA
		Sta 9712+83 - 62' RT	1	EA
		Sta 9712+94 - 29' LT	1	EA
PR2WB		Sta 776+77 - 43' RT	1	EA
		Sta 776+76 - 44' LT	1	EA
		Sta 779+97 - 27' RT	1	EA
		Sta 779+97 - 29' LT	1	EA
		Sta 781+72 - 158' LT	1	EA
		Sta 782+09 - 156' LT	1	EA
		Sta 786+38 - 154' LT	1	EA
		Sta 786+53 - 45' LT	1	EA
		Sta 786+59 - 28' RT	1	EA
		Sta 786+82 - 154' LT	1	EA
		Sta 789+12 - 48' LT	1	EA
		Sta 792+10 - 55' LT	1	EA
PR2EB		Sta 783+60 - 79' LT	1	EA
		Sta 783+65 - 59' RT	1	EA
		Sta 786+62 - 88' RT	1	EA
		Sta 797+77 - 38' LT	1	EA
		Sta 797+75 - 53' RT	1	EA
		Total =	23	EA

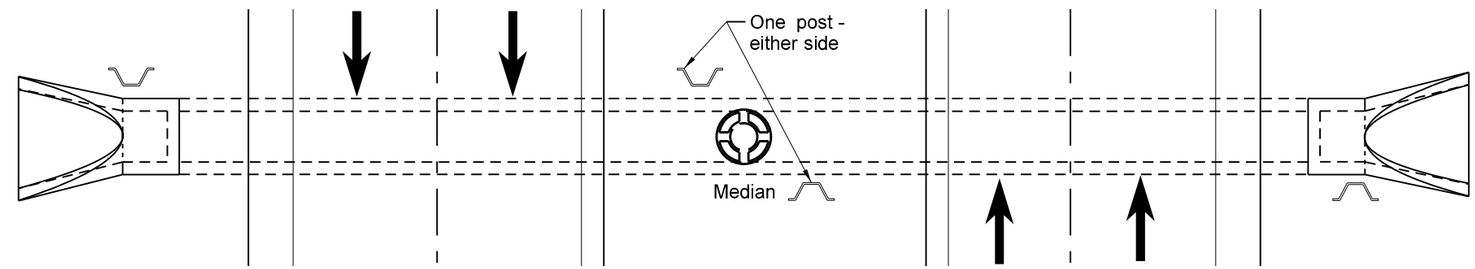

MAIN LINE
DIVIDED HIGHWAY
CULVERTS 10' OR LESS

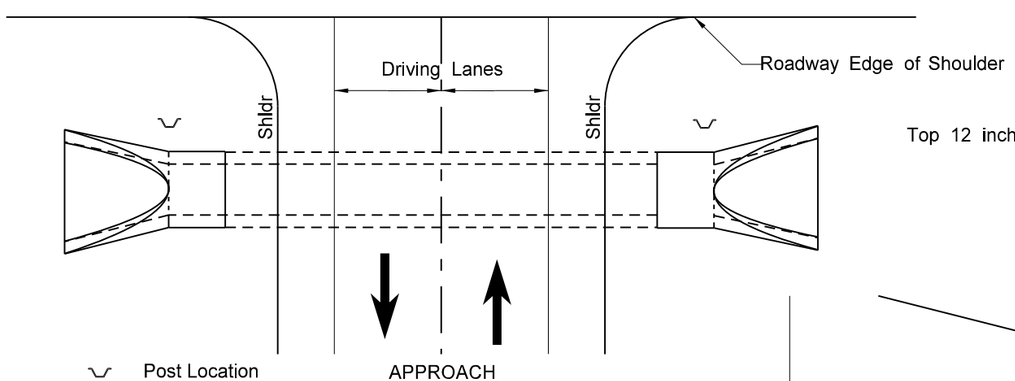

APPROACH

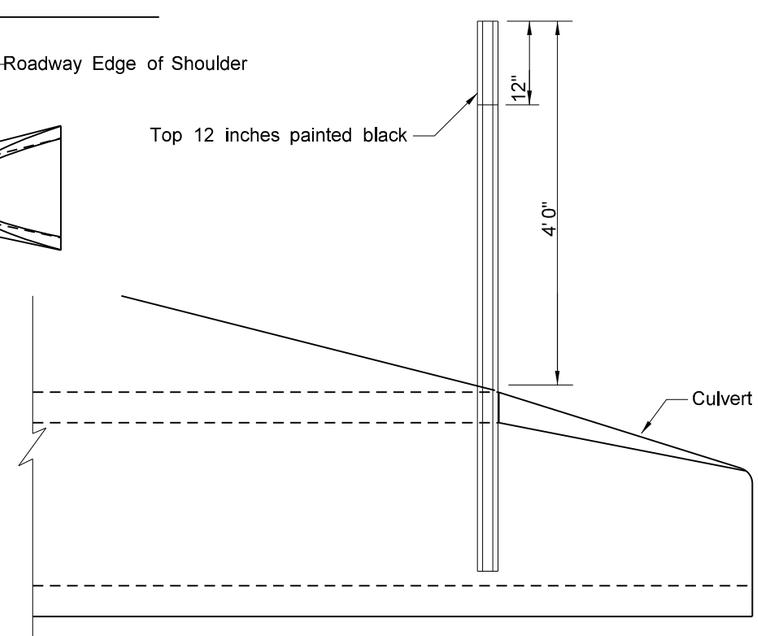

INSTALLATION

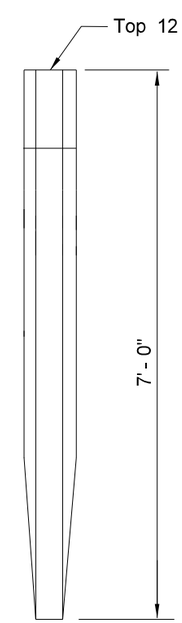

U TYPE POST

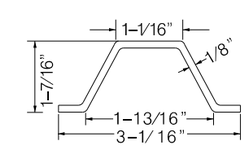

STEEL POST DETAIL
Approx. 2 lbs. / ft

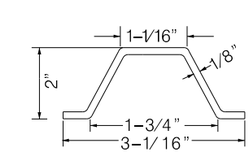

ALUMINUM POST DETAIL
Approx. 0.88 lbs. / ft

NOTES:
Each end of culverts crossing the roadway within the right-of-way shall be marked with a post as shown.

INSTALLATION:
Posts are to be installed in front of the culvert in the direction of travel along the side of the culvert and one foot from the culvert opening unless shown otherwise on the plans.

POSTS:
Posts shall conform to section 894.06 of the Standard Specifications.

BASIS OF PAYMENT:
All costs for furnishing and installing the markers shall be included in the price bid for the item "Object Marker - Culverts".

This document was originally issued and sealed by Eric Bach, Registration Number PE-5506, on 9/12/13 and the original document is stored at the North Dakota Department of Transportation

General Details

US 85 Intersection Improvements

Object Markers-Culvert

STATE	PROJECT NO.	SECTION NO.	SHEET NO.
ND	SOIA-7-085(092)183	20	5

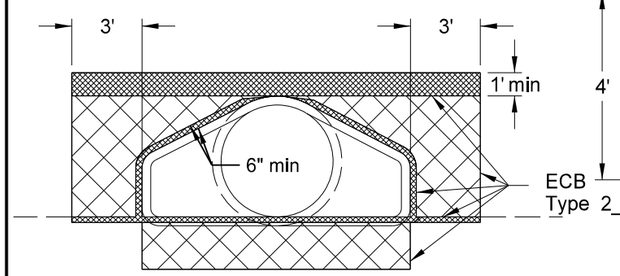

FRONT VIEW

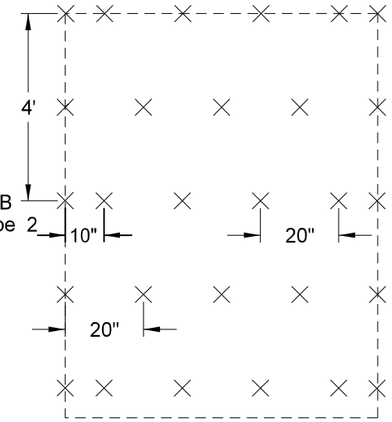

STAPLE PATTERN: 3.8 staples per square yard using 8-inch 11 gauge wire "u" staples

DIA	X	Y	Surface area to be protected	ECB
In	Ft	Ft	SF	SY
15	9.0	20.0	176.0	20
18	9.5	20.7	190.7	22
21	9.5	21.0	190.9	22
24	10.5	21.6	214.1	24
30	11.6	22.5	241.5	27
36	12.7	23.3	268.8	30
42	13.3	23.3	279.7	31
48	13.8	24.0	293.2	33
54	14.5	23.4	300.6	34
60	15.0	23.0	307.5	35
66	15.6	24.0	325.6	37
72	16.2	24.5	340.6	38

Note: Quantities based on 8:1 slope.

Erosion Control Blanket (ECB)						
Location of Surface Area to be Protected			Pipe Diameter	No	Unit Quantity	Total Quantity Type 2
Alignment	Station	Offset (FT)	(INCH)		(SY)	(SY)
US 2 EB	783+65	59' RT	18	1	22	22
US 2 EB	797+77	38' LT	18	1	22	22
US 2 EB	797+75	58' RT	18	1	22	22
US 2 WB	776+76	44' LT	24	1	24	24
US 2 WB	781+72	158' LT	18	1	22	22
US 2 WB	782+09	156' LT	18	1	22	22
US 2 WB	786+38	154' LT	18	1	22	22
US 2 WB	786+53	45' LT	30	1	27	27
US 2 WB	786+82	154' LT	18	1	22	22
US 2 WB	789+12	48' LT	24	1	24	24
US 2 WB	795+78	142' LT	22 x 13	1	22	22
US 2 WB	795+78	77' LT	22 x 13	1	22	22
US 2 WB	795+82	144' LT	22 x 13	1	22	22
US 2 WB	795+82	77" LT	22 x 13	1	22	22
				Total=		317 SY

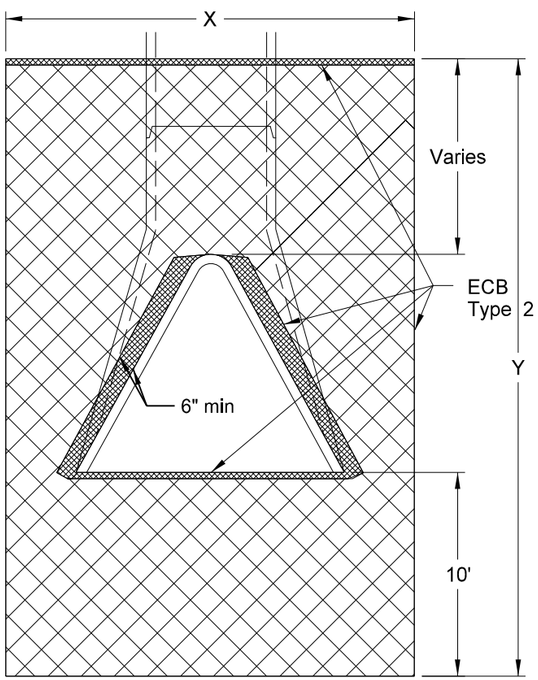

TOP VIEW

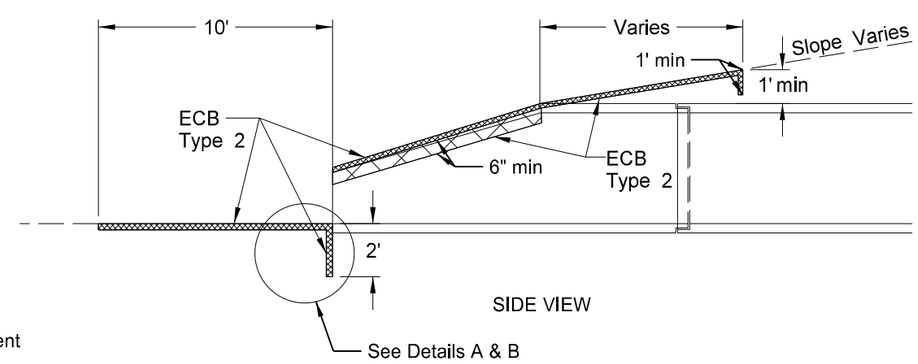

SIDE VIEW

NOTE: The ECB shall be tucked a minimum of 1' into the embankment above the flared end section, a minimum of 6" into the embankment (against the flared end section) around the opening of the flared end section, and 2' into the ground at the end of the flared end section.

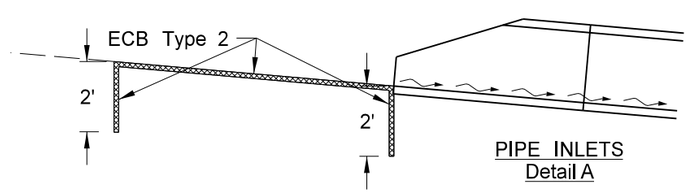

PIPE INLETS
Detail A

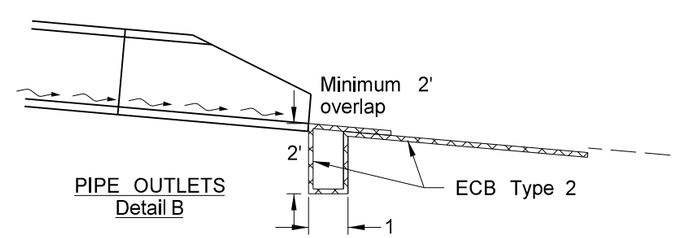

PIPE OUTLETS
Detail B

This document was originally issued and sealed by Eric Bach, Registration Number PE- 5506, on 9/26/13 and the original document is stored at the North Dakota Department of Transportation

General Details

US 85 Intersection Improvements

Erosion Control at Culvert Flared End Sections

STATE	PROJECT NO.	SECTION NO.	SHEET NO.
ND	SOIA-7-085(092)183	20	6

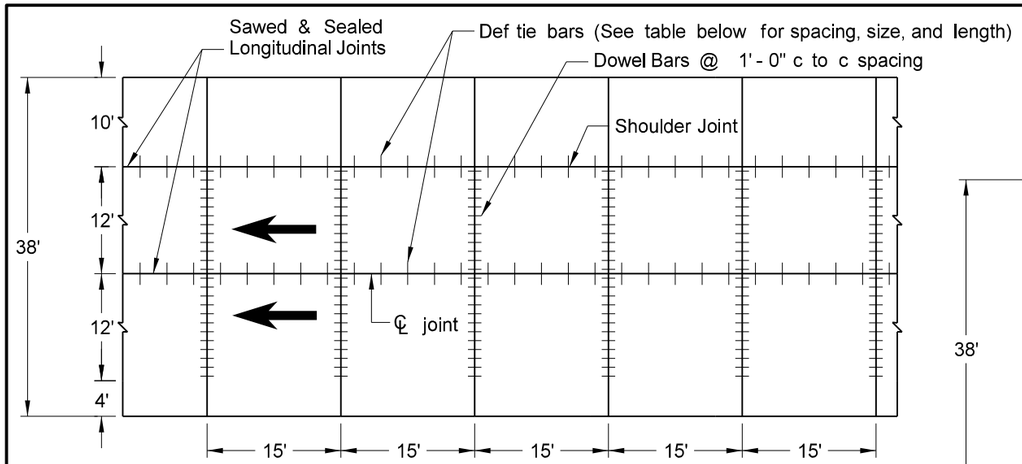

Mainline Joints
15' joint spacing

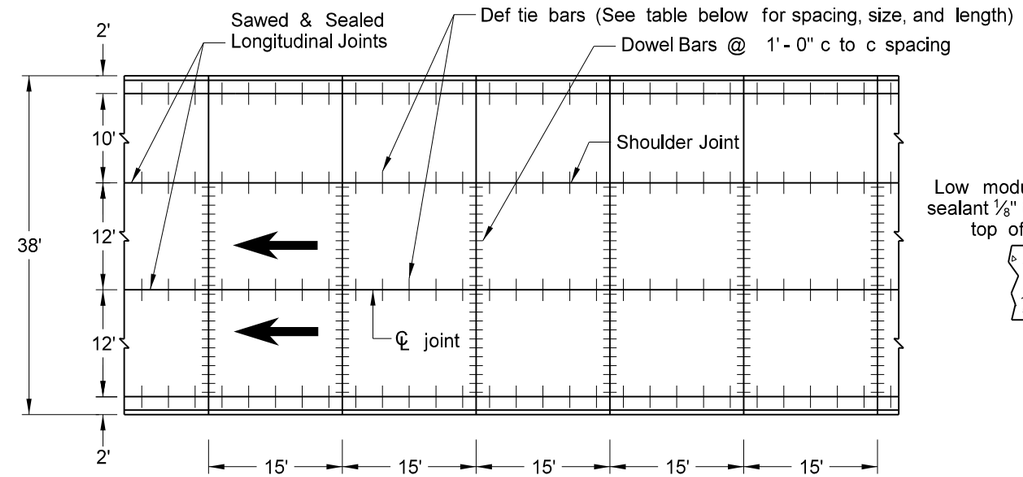

Mainline Joints
15' joint spacing

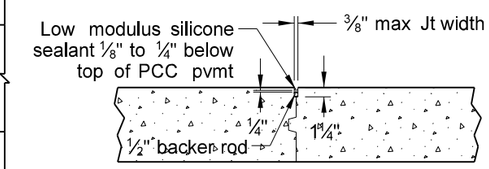

Longitudinal Joint Silicone Seal
(non-tied keyed joints)

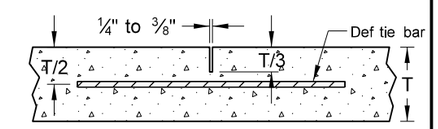

Joint Sawing Detail
(all sawed and tied joints)

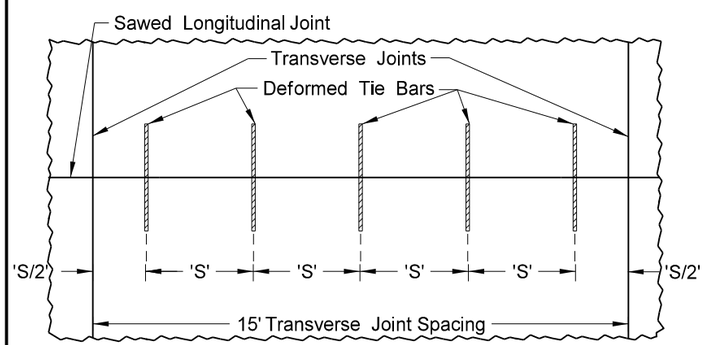

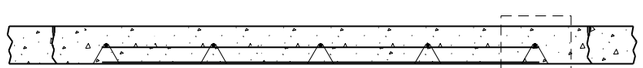

Longitudinal Tie Bar Assembly
(One unit shown)

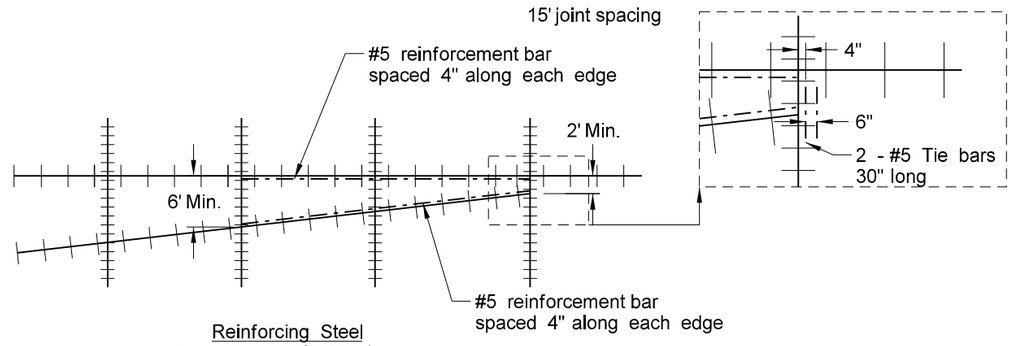

Reinforcing Steel
Concrete panels 6' or less.
Stopper bars at end of longitudinal joint.

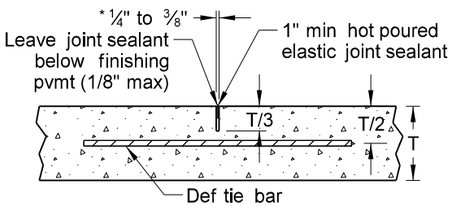

Joint Sealing Detail (all sawed and tied joints)
*Width requirement for top 1" only.
Bottom portion of saw cut may be narrower.

Notes:

1. T = Pavement Thickness
2. Dowel bars shall be 1½" x 18" for T greater than 10".
3. The cost for Reinforcing Steel shall be included in the unit price bid for "14IN Reinf Concrete Pavement CL AE"

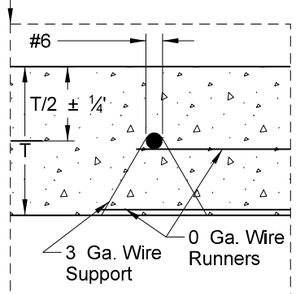

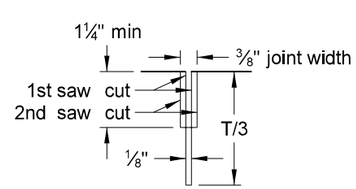

Transverse Joint Sawing

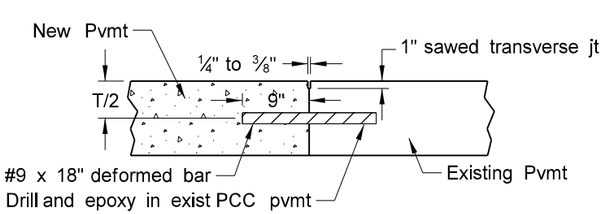

Deformed Bar Installation (2'-0" c to c)
(Transverse Joints)

Longitudinal Joint Tie Bar Size, Length, and Spacing**

Pavement Depth	14"
CL ML	
Spacing 'S'	36"
Size and Length	#6 Bar x 36"
10' Shoulder	
Spacing 'S'	45"
Size and Length	#6 Bar x 36"

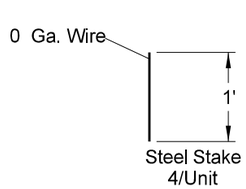

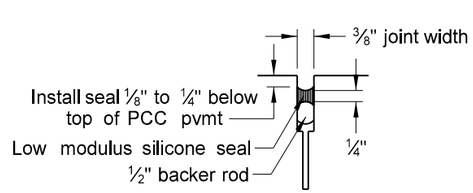

Transverse Joint Sealing

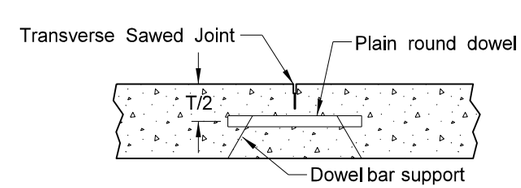

Doweled Transverse Joint

**Tie Bar Lengths listed are for Grade 40 Steel. See Std D-550-2 for Grade 60 Steel.

This document was originally issued and sealed by Eric Bach, Registration Number PE- 5506, on 9/12/13 and the original document is stored at the North Dakota Department of Transportation

General Details

US 85 Intersection Improvements

PCC Pavement Joint Details

STATE	PROJECT NO.	SECTION NO.	SHEET NO.
ND	SOIA-7-085(092)183	20	7

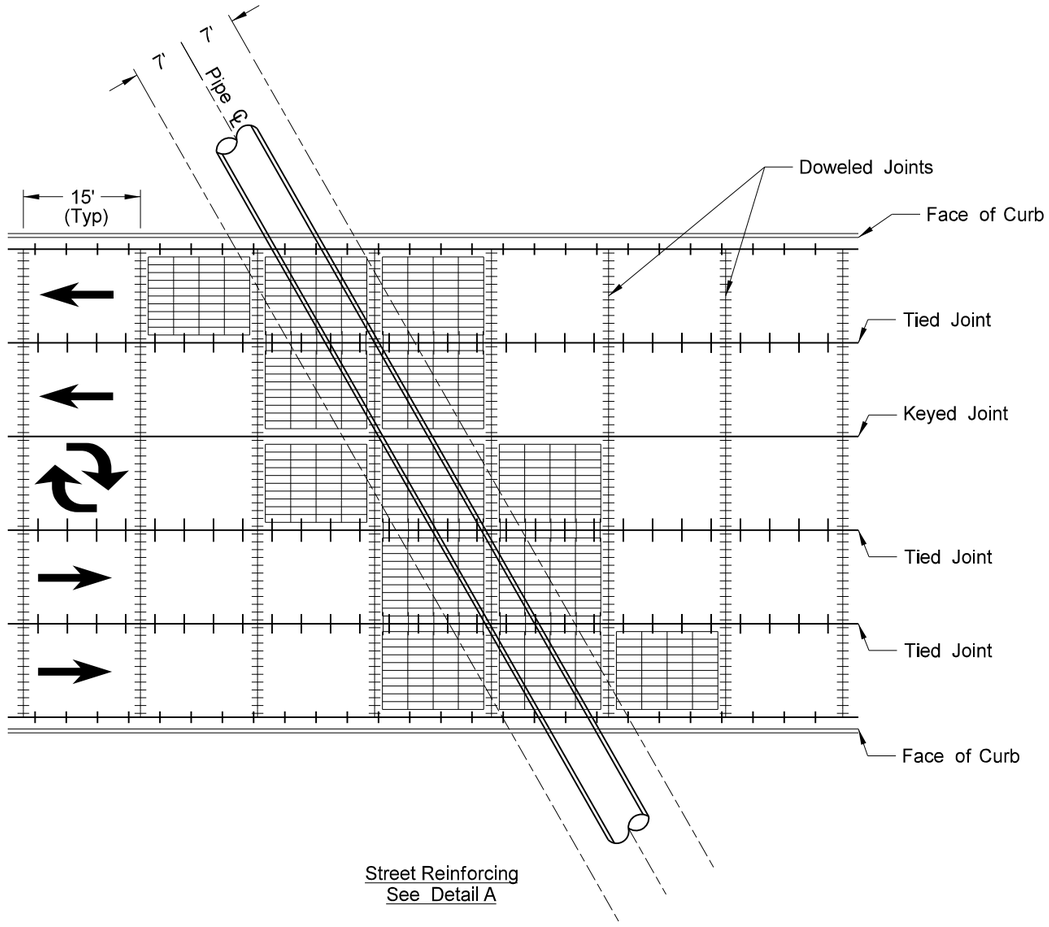

Street Reinforcing
See Detail A

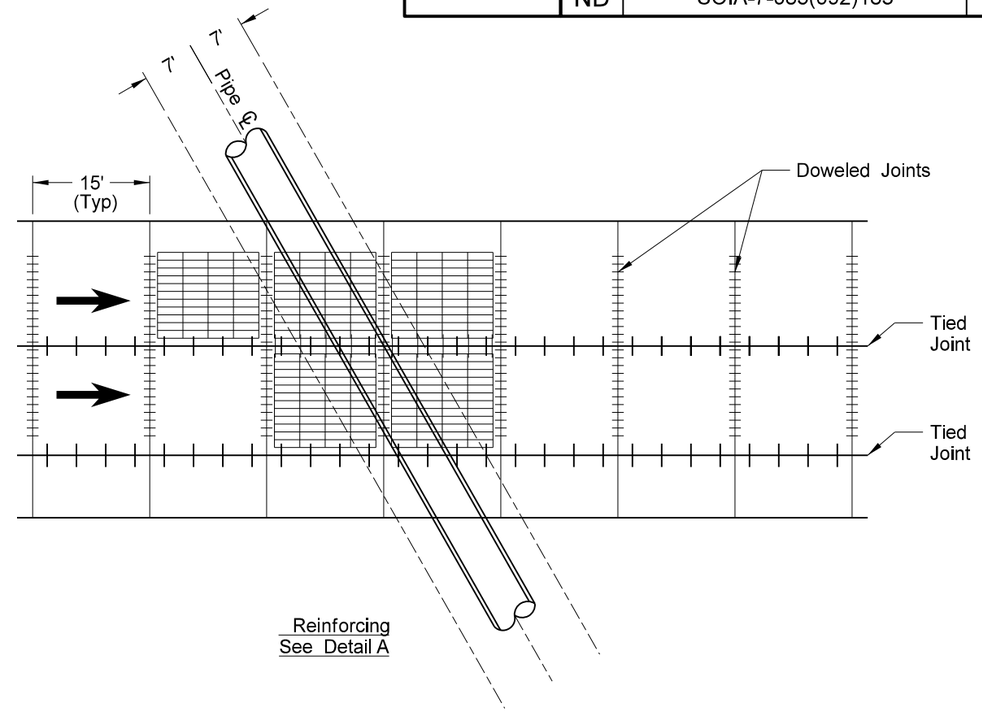

Reinforcing
See Detail A

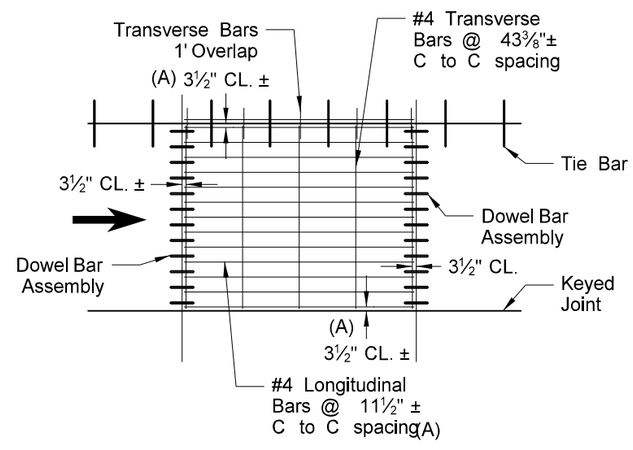

Detail A
Reinforcing Layout

Longitudinal Bar Spacings		
Panel Width	Longitudinal Bar Spacing	Bar Clearance, From Long. Joint
12'	11⅜"	3½"
14'	11½"	3¼"
16'	11½"	3¾"

(A) See Longitudinal Bar Spacings table for various panel widths.

NOTES:

1. Place reinforcing steel above dowel bars, above longitudinal centerline tie bars, and under shoulder tie bars.
2. A 1 foot minimum overlap of transverse reinforcing steel across the longitudinal tied joints shall be provided.
3. Transverse reinforcing steel shall be gapped across keyed joints a minimum of 6 inches (3 inches on each side of joint).
4. The complete panel shall be reinforced if any part of the panel lies within 7 feet of the pipe centerline.
5. All costs to furnish and install the reinforcing steel as shown shall be included in the price bid for concrete pavement items.

This document was originally issued and sealed by Eric Bach, Registration Number PE-5506, on 9/12/13 and the original document is stored at the North Dakota Department of Transportation

General Details

US 85 Intersection Improvements

Pavement Reinforcing at Pipe Locations

STATE	PROJECT NO.	SECTION NO.	SHEET NO.
ND	SOIA-7-085(092)183	20	8

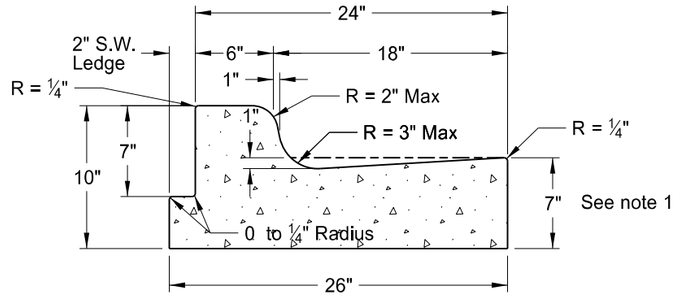

Curb & Gutter Type 1
Adjacent to Median

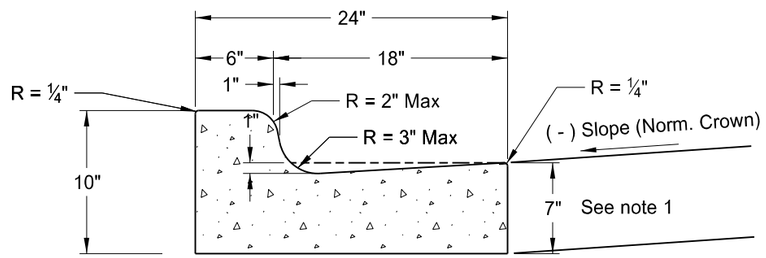

Curb & Gutter Type 1 (Sec. A)

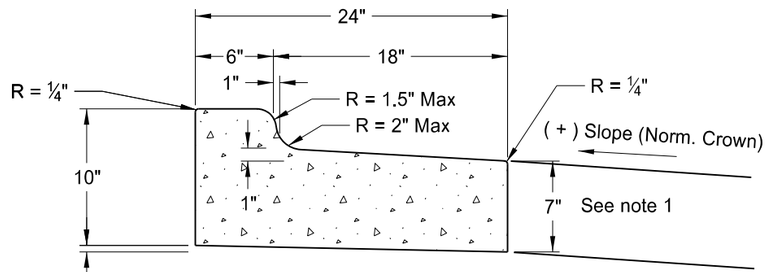

Curb & Gutter Type 1 (Sec. B)

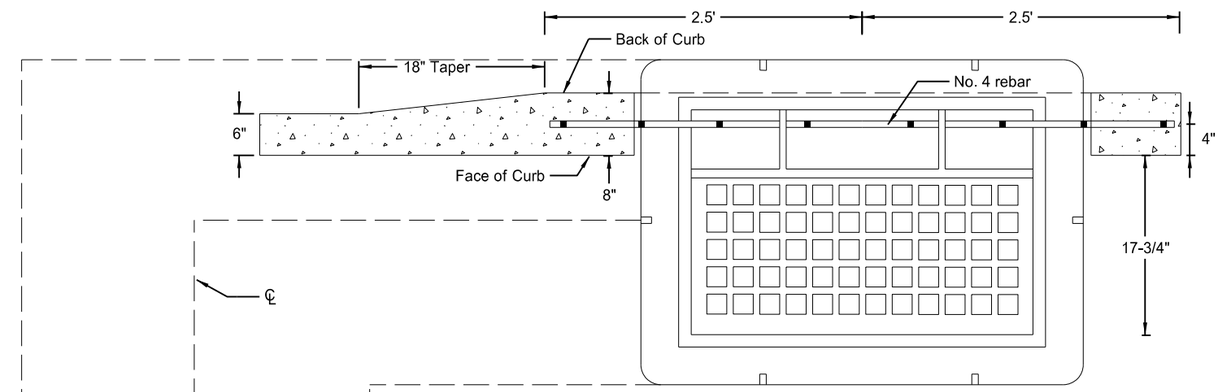

TOP

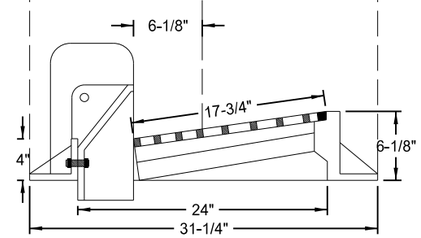

SIDE

NOTES:

1. Curb and Gutter Type 1 to be used. Section "A" to be used with (-) pavement slopes and section "B" to be used with (+) pavement slopes.
2. Depth of Face of Gutter: For hot bituminous pavement the depth of gutter shall be as shown. For PCC pavements the depth of gutter shall match adjacent PCC pavement.
3. On street returns and other locations where the new curb and gutter ends and does not abut existing curb and gutter, the end 3' 4" of the curb shall be tapered from 4" in height to 0". A 1/2" premolded isolation joint which is full depth and the same shape as the curb and gutter shall be installed just ahead of the taper. An 18" tie bar shall be installed across the joint.

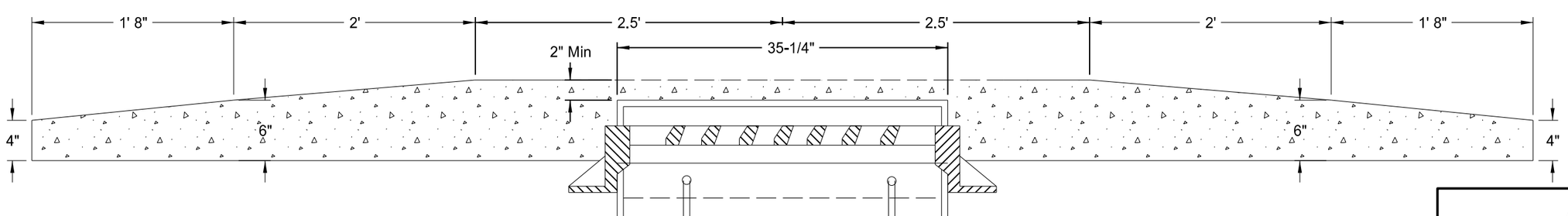

FRONT

This document was originally issued and sealed by Eric Bach, Registration Number PE- 5506, on 9/12/13 and the original document is stored at the North Dakota Department of Transportation

General Details

US 85 Intersection Improvements

4" Curb Detail

STATE	PROJECT NO.	SECTION NO.	SHEET NO.
ND	SOIA-7-085(092)183	20	9

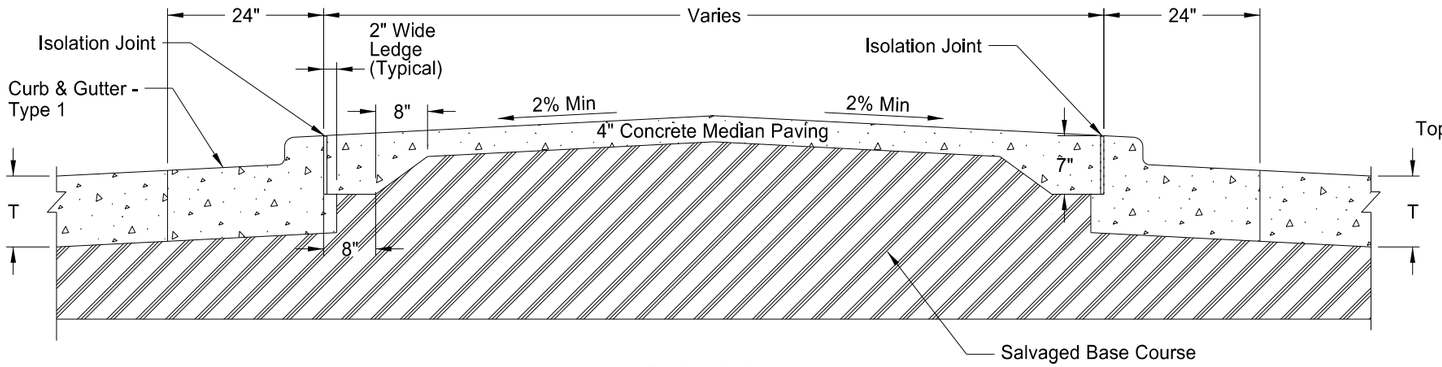

Section A - A

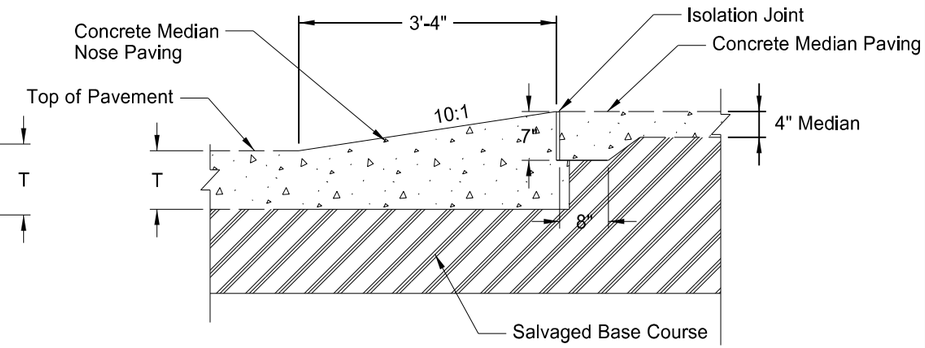

Section B-B

Concrete Pavement

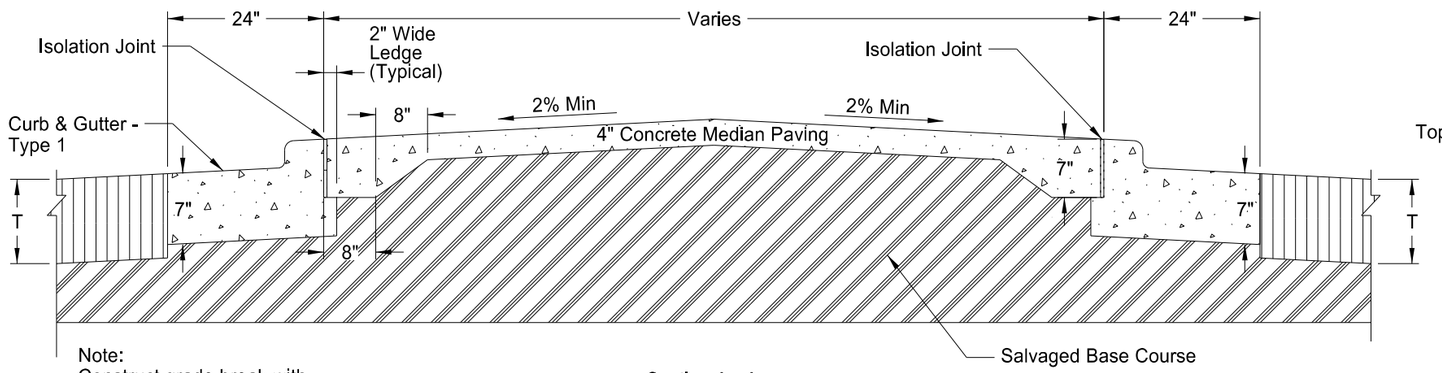

Note:
Construct grade break with minimum slope of 2% where median is greater than 5' in width.

Section A - A

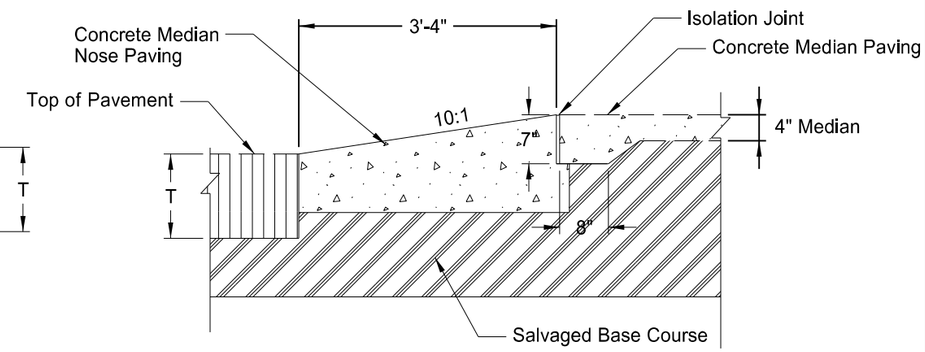

Section B-B

Asphalt Pavement

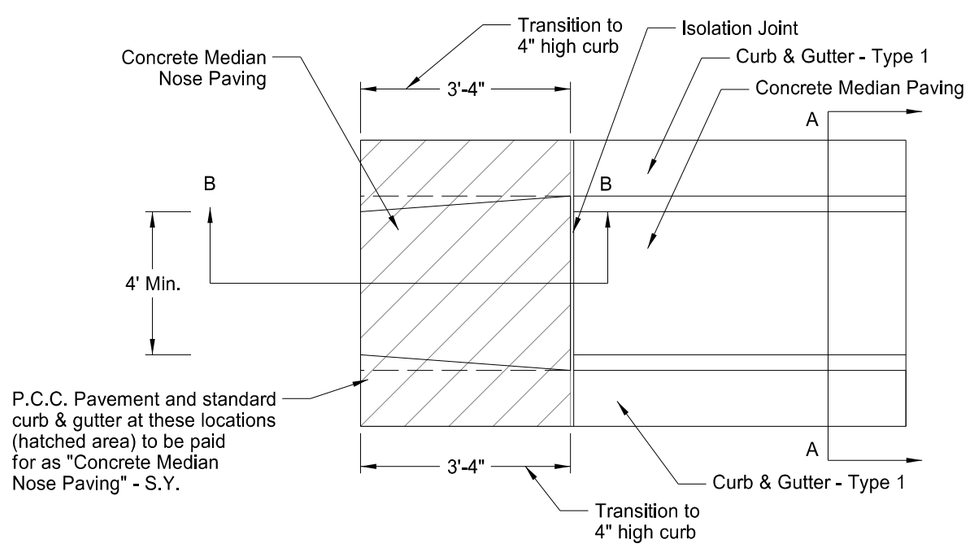

Median Plan View

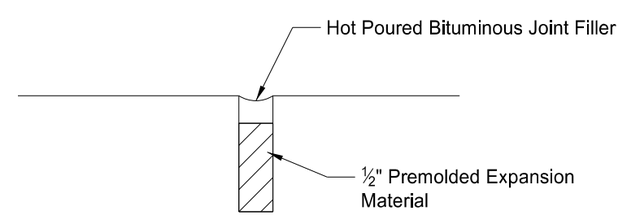

Isolation Joint

T = The P.C.C. or asphalt pavement thickness as shown in the plans

This document was originally issued and sealed by Eric Bach, Registration Number PE- 5506, on 9/12/13 and the original document is stored at the North Dakota Department of Transportation

General Details

US 85 Intersection Improvements

Concrete Median Paving Detail

STATE	PROJECT NO.	SECTION NO.	SHEET NO.
ND	SOIA-7-085(092)183	20	10

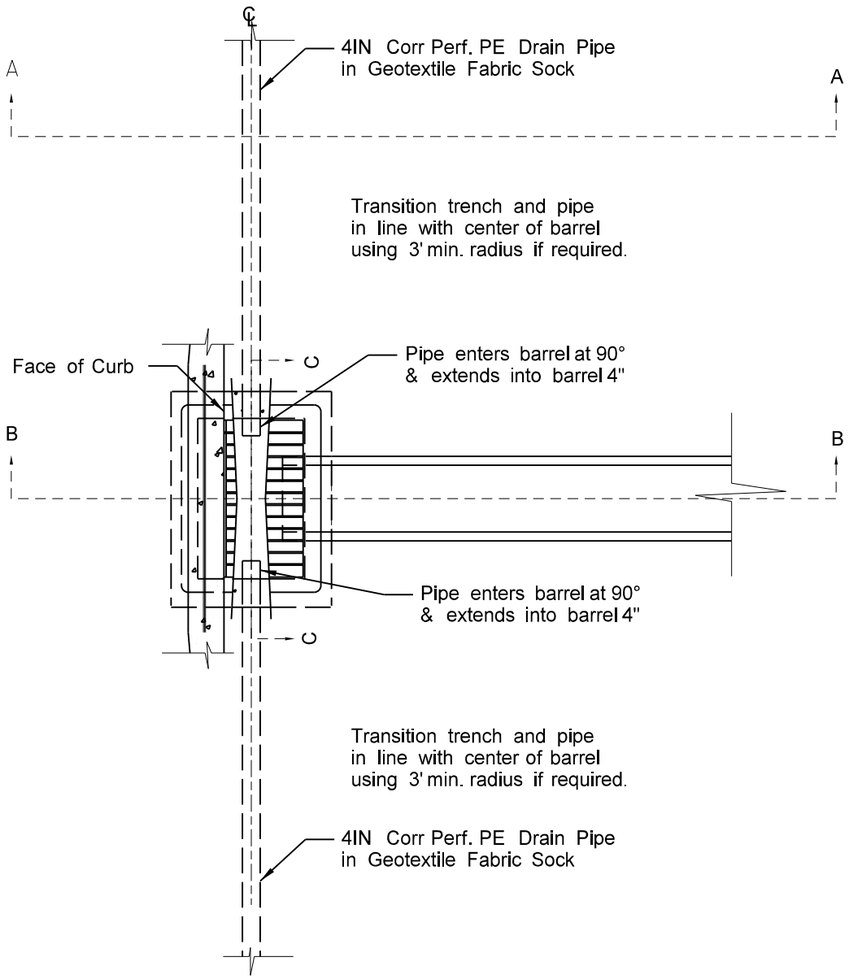

Edgedrain Connection to Inlets
Plan View

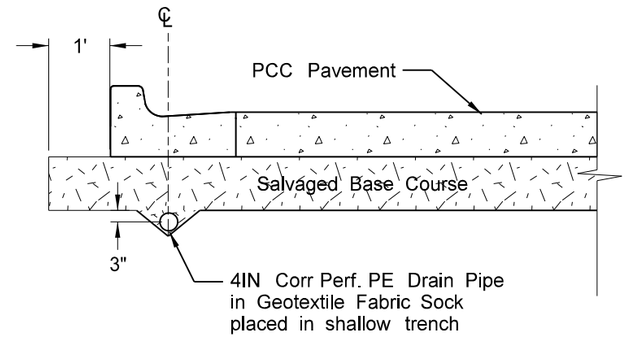

Edgedrain Layout
Profile View

SECTION A-A

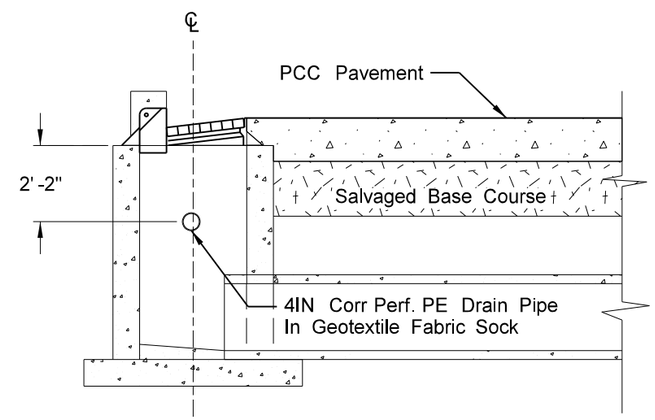

Edgedrain Connection to Inlets
Profile View

SECTION B-B

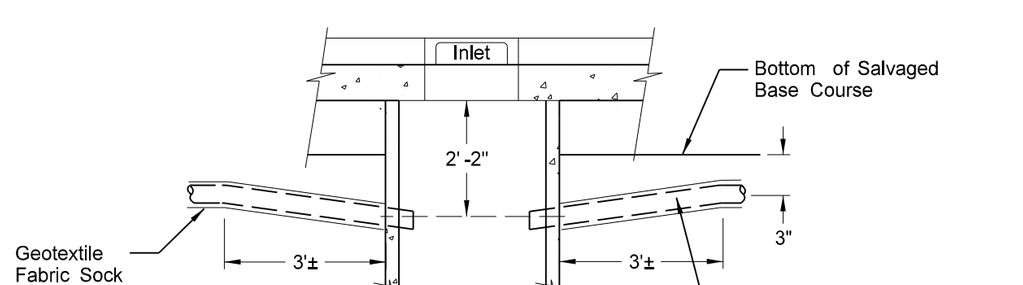

SECTION C-C

This document was originally issued and sealed by Eric Bach, Registration Number PE- 5506, on 9/12/13 and the original document is stored at the North Dakota Department of Transportation

General Details

US 85 Intersection Improvements

Edgedrain Detail

STATE	PROJECT NO.	SECTION NO.	SHEET NO.
ND	SOIA-7-085(092)183	20	11

Note: Drawing not to scale

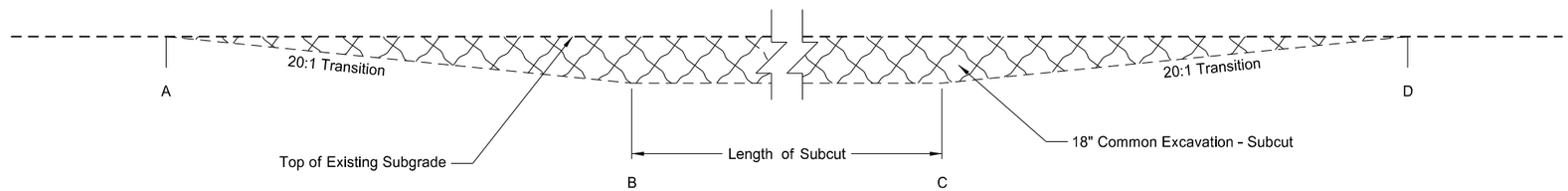

Subcut - Removal

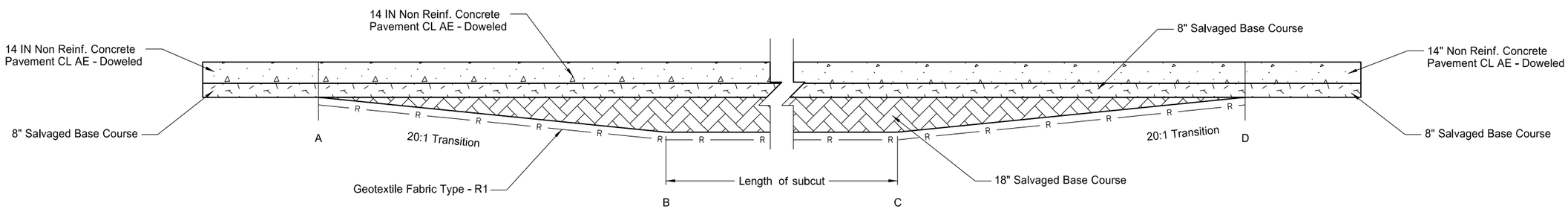

Subcut - Backfill

Subcut Summary				
Number of Subcuts (1)	Length	Common Excavation - Subcut	Salvaged Base Course	Geotextile Fabric - Type R1
Unit	LF	CY	TON	SY
BC	500	2647	4962	5292
AB & CD	60	159	298	635
Total	560	2806	5260	5927

This document was originally issued and sealed by Eric Bach, Registration Number PE-5506 , on 9/12/13 and the original document is stored at the North Dakota Department of Transportation

General Details

US 85 Intersection Improvements

Discretionary Subcut Detail

STATE	PROJECT NO.	SECTION NO.	SHEET NO.
ND	SOIA-7-085(092)183	20	12

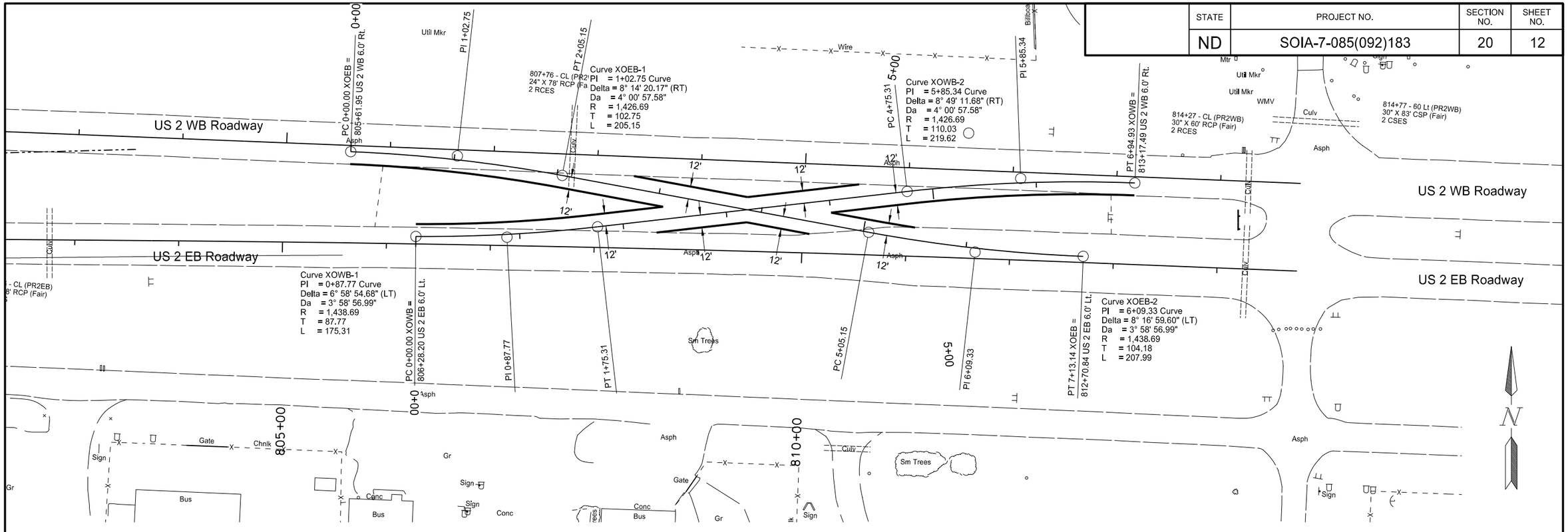

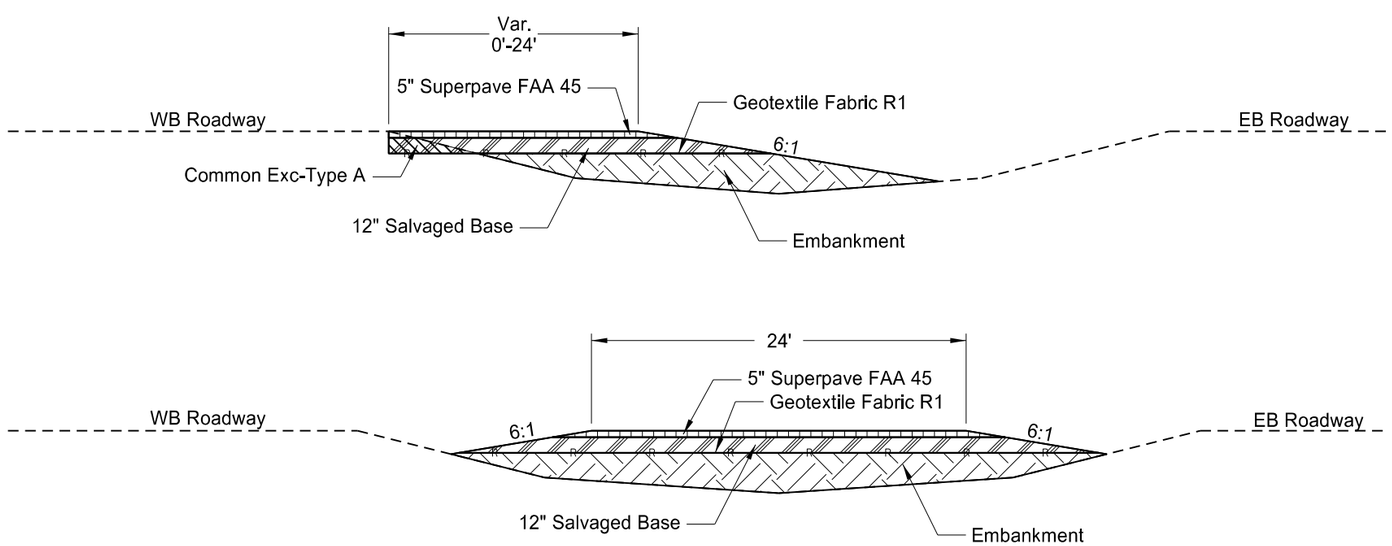

Crossover Typical Sections

202	136	Removal of Pavement	2026	TON
203	101	Common Excavation-Type A	2500	CY
203	109	Topsoil	460	CY
203	140	Borrow-Excavation	3000	CY
302	101	Salvaged Base Course	1510	TON
401	100	MC70 or 250 Liquid Asphalt	509	GAL
401	150	SS1H or CSS1H or MS1 Emulsified Asphalt	94	GAL
408	215	Superpave FAA 45	516	TON
410	445	PG 58-28 Asphalt Cement	31	TON
708	2240	Seeding-Type B-CL II	0.8	ACRE
708	2260	Seeding-Type B-CL IV	0.8	ACRE
708	5500	Mulching	0.8	ACRE
709	701	Geotextile Fabric-Type R1	2761	SY

This document was originally issued and sealed by Eric Bach, Registration Number PE- 5506, on 9/26/13 and the original document is stored at the North Dakota Department of Transportation

General Details

US 85 Intersection Improvements

Median Crossover Detail
East End of Project

STATE	PROJECT NO.	SECTION NO.	SHEET NO.
ND	SOIA-7-085(092)183	20	13

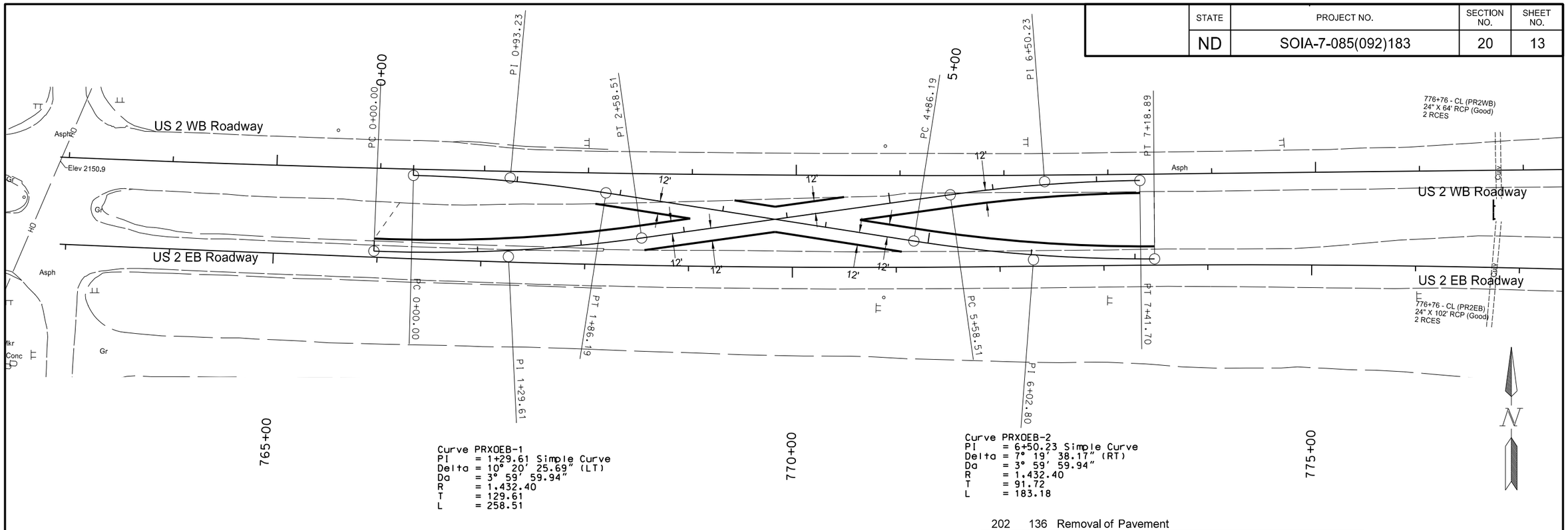

Curve PRXOEB-1
PI = 1+29.61 Simple Curve
Delta = 10° 20' 25.69" (LT)
Da = 3° 59' 59.94"
R = 1,432.40
T = 129.61
L = 258.51

Curve PRXOEB-2
PI = 6+50.23 Simple Curve
Delta = 7° 19' 38.17" (RT)
Da = 3° 59' 59.94"
R = 1,432.40
T = 91.72
L = 183.18

202	136	Removal of Pavement	2245	TON
203	101	Common Excavation-Type A	2500	CY
203	109	Topsoil	639	CY
203	140	Borrow-Excavation	3000	CY
302	101	Salvaged Base Course	1725	TON
401	100	MC70 or 250 Liquid Asphalt	441	GAL
401	150	SS1H or CSS1H or MS1 Emulsified Asphalt	103	GAL
410	215	Superpave FAA 45	520	TON
410	445	PG 58-28 Asphalt Cement	32	TON
708	1430	Fiber Rolls 12"	20	LF
708	2240	Seeding-Type B-CL II	0.8	ACRE
708	2260	Seeding-Type B-CL IV	0.8	ACRE
708	5500	Mulching	0.8	ACRE
709	701	Geotextile Fabric-Type R1	2885	SY

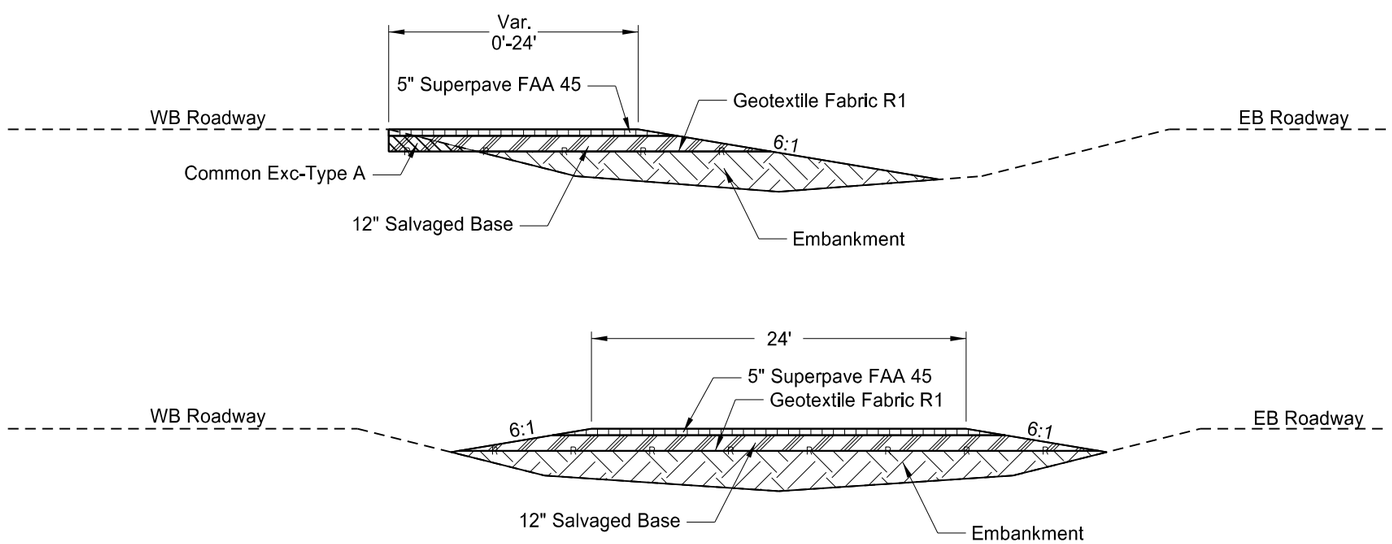

Crossover Typical Sections

This document was originally issued and sealed by Eric Bach, Registration Number PE- 5506, on 9/12/13 and the original document is stored at the North Dakota Department of Transportation

General Details

US 85 Intersection Improvements

Median Crossover Detail
West End of Project

STATE	PROJECT NO.	SECTION NO.	SHEET NO.
ND	SOIA-7-085(092)183	20	14

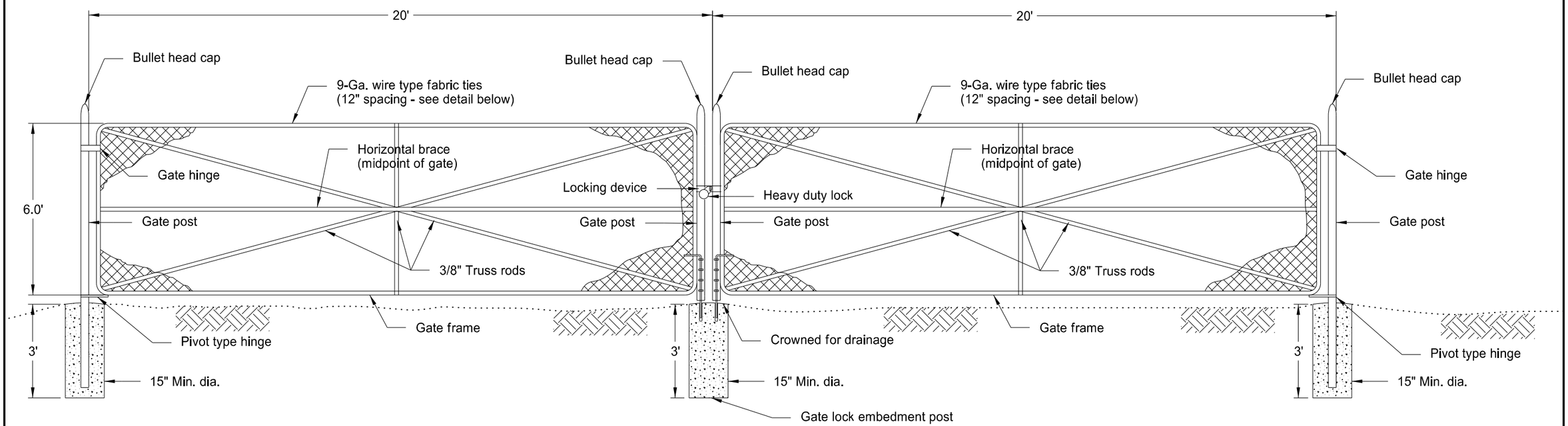

Vehicle Gate

STA 9704+56 (121' LT) - 1.0 EA
STA 9706+06 (81' LT) - 1.0 EA

Submit shop drawings for entire assembly

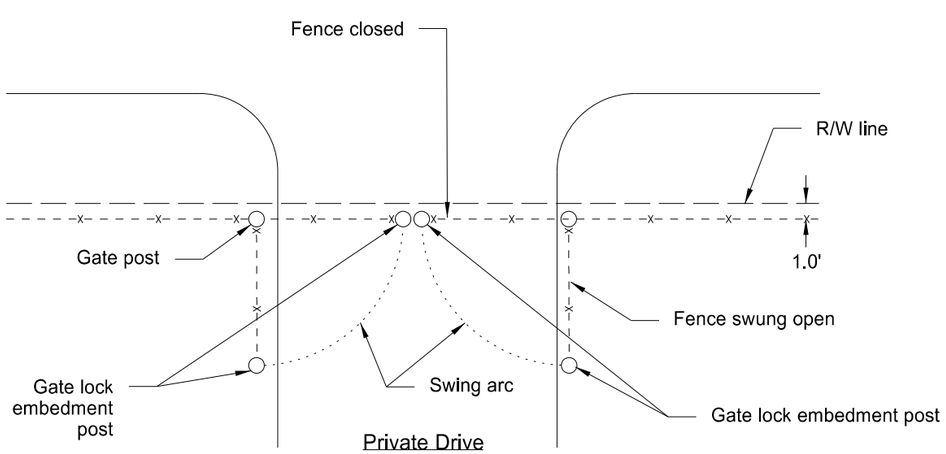

This document was originally issued and sealed by Eric Bach, Registration Number PE- 5506, on 9/12/13 and the original document is stored at the North Dakota Department of Transportation

General Details

US 85 Intersection Improvements

Vehicle Gate Detail

STATE	PROJECT NO.	SECTION NO.	SHEET NO.
ND	SOIA-7-085(092)183	20	15

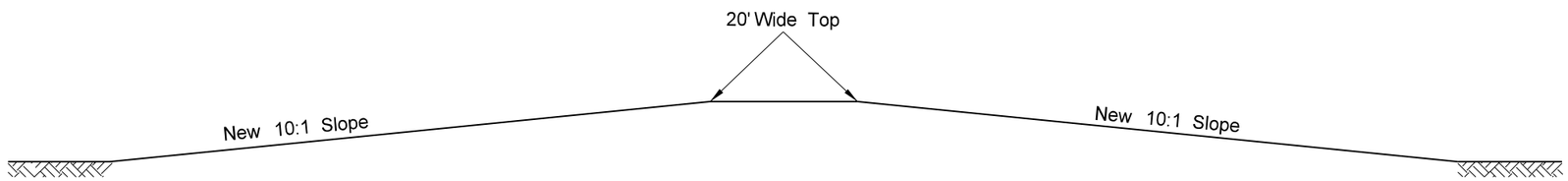

Location	Quantity
US 2 EB 776+98.86 LT	1
US 2 WB 777+12.22 LT	1
Total	2

Note: The cost of the labor, equipment and materials to perform the following work will be included in the price bid for "Borrow Excavation."

1. The material used to flatten the slope will be compacted in accordance with Section 203.02I of the Standard Specifications.

This document was originally issued and sealed by Eric Bach, Registration Number PE- 5506, on 9/12/13 and the original document is stored at the North Dakota Department of Transportation

General Details

US 85 Intersection Improvements

Ditch Block Detail

STATE	PROJECT NO.	SECTION NO.	SHEET NO.
ND	SOIA-7-085(092)183	20	16

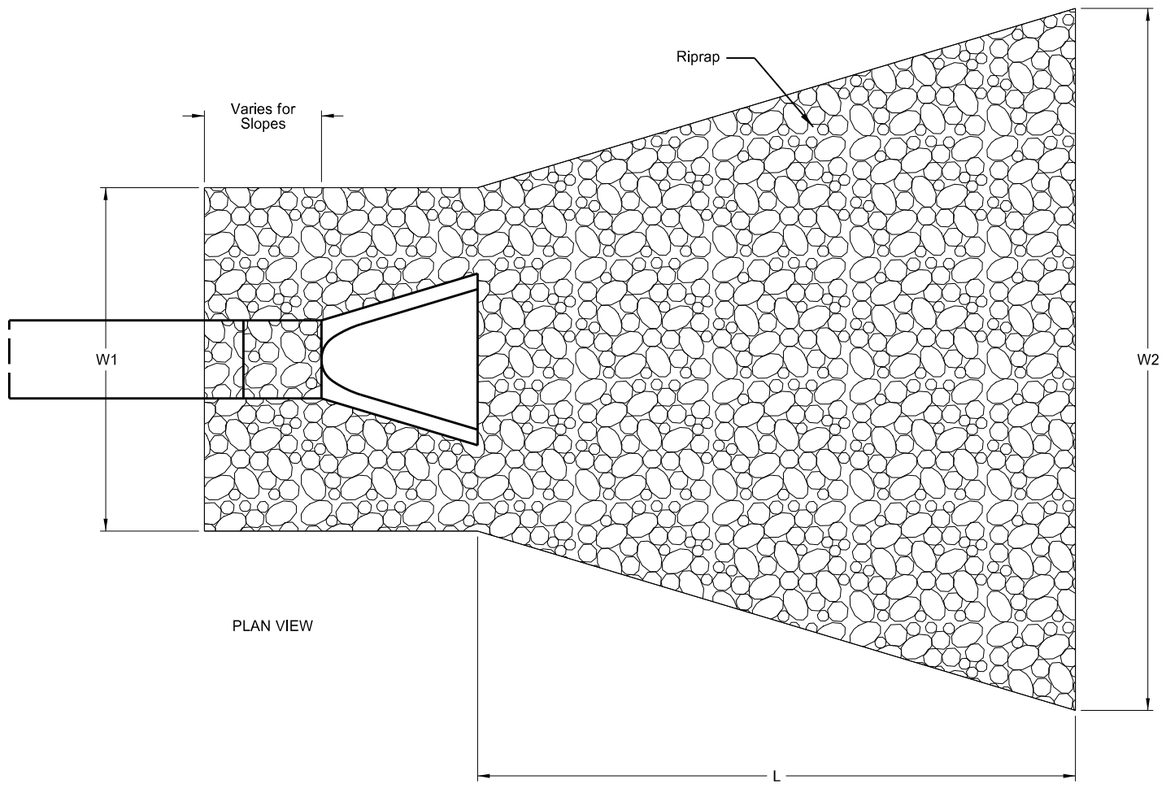

PLAN VIEW

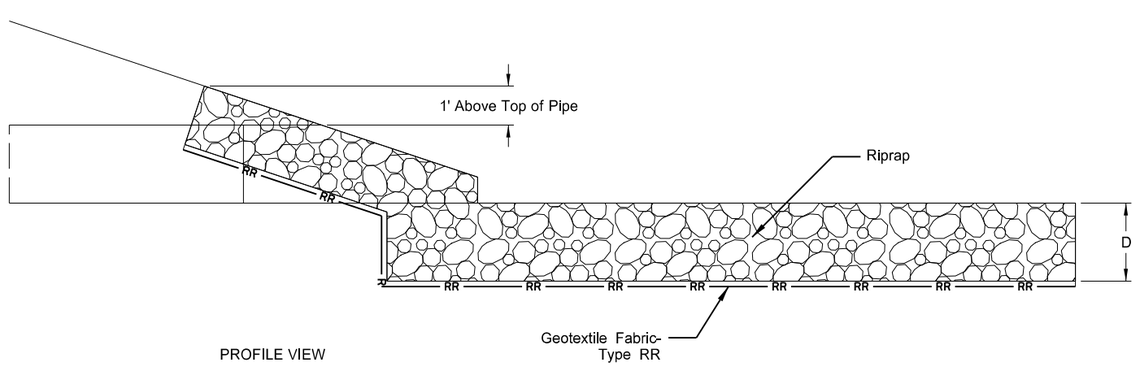

PROFILE VIEW

Riprap Dimensions				
Pipe Diameter (inches)	L (feet)	W1 (feet)	W2 (feet)	Riprap Depth, D (feet)
30	12.5	9.6	17.9	24

Riprap Quantites				
	Per Outlet		Totals	
Pipe Diameter (inches)	Geotextile Fabric Type RR (SY)	Riprap Loose Rock (CY)	Total Geotextile Fabric Type RR (SY)	Total Riprap Loose Rock (CY)
30	45.5	18.7	45.5	18.7

Pipe Stations - Riprap at Outlet End	
30" Pipe	
US 2 - EB	786+62 - 88 RT

* Note: Riprap is to be installed by the Contractor inside of the Right of Way at the Engineer's discretion

This document was originally issued and sealed by Erin L. Hunker, Registration Number PE-6657 , on 9/26/13 and the original document is stored at the North Dakota Department of Transportation

General Details

US 85 Intersection Improvements

Riprap at Pipe Outlets

STATE	PROJECT NO.	SECTION NO.	SHEET NO.
ND	SOIA-7-085(092)183	20	17

Note: Drawing not to scale

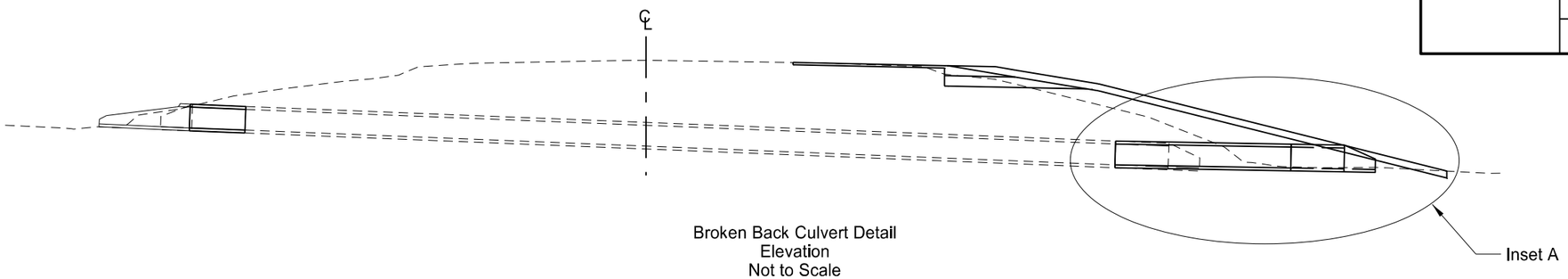

Broken Back Culvert Detail
Elevation
Not to Scale

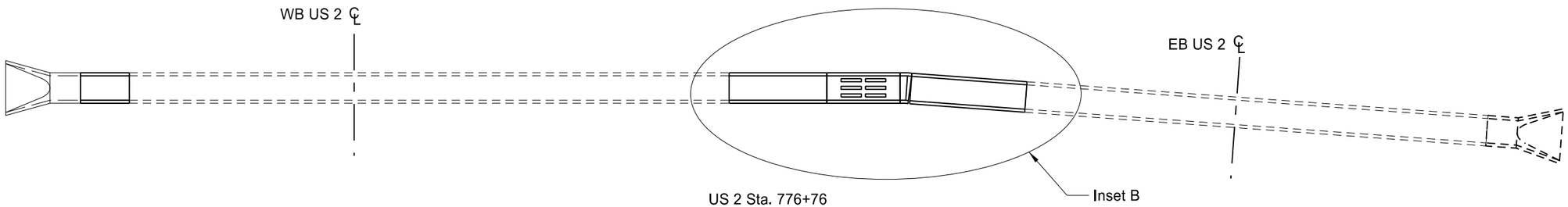

US 2 Sta. 776+76
Pipe Connection with Horizontal Bend
Plan View
Not to Scale

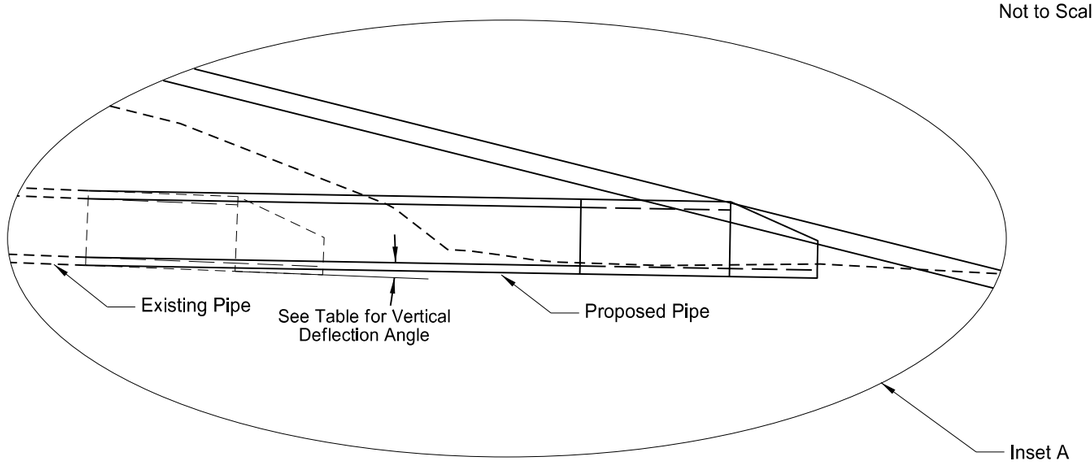

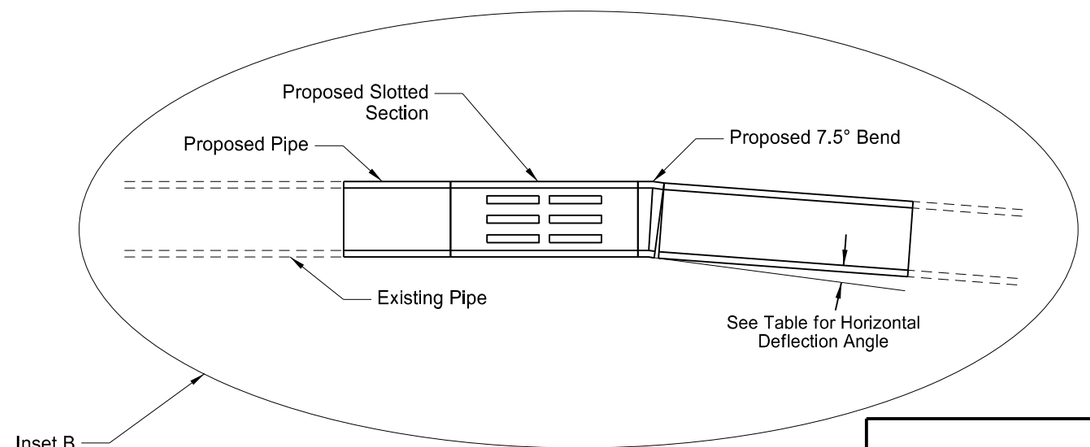

Station	Pipe Diameter (Inches)	Vertical Deflection Angle (Degrees)	Horizontal Deflection Angle (Degrees)
US 2 WB 776+76 - LT	24	2.39	N/A
US 2 EB & WB 776+76	24	0.98	0.50
US 2 EB 797+76 - RT	18	1.28	N/A

Typical Brokeback Culvert Installation

1. Remove Existing End Section
2. Extend Pipe with Proposed Deflection Angle and Slope (see Note 714-P07)
3. Relay End Section or Install Traversable End Section according to Plan

This document was originally issued and sealed by Erin L. Hunker, Registration Number PE-6657, on 9/11/13 and the original document is stored at the North Dakota Department of Transportation

General Details

US 85 Intersection Improvements

Brokeback Culverts

STATE	PROJECT NO.	SECTION NO.	SHEET NO.
ND	SOIA-7-085(092)183	20	18

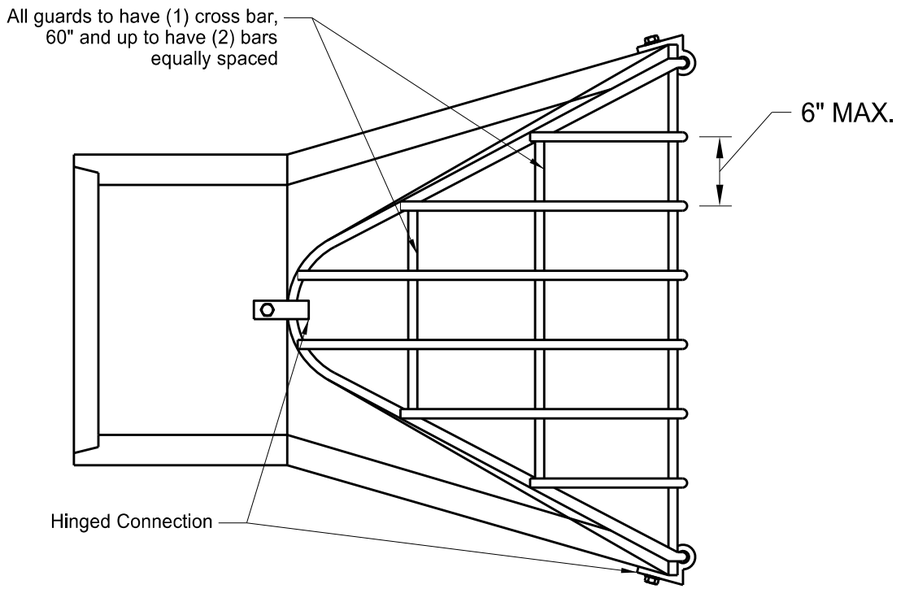

Plan View

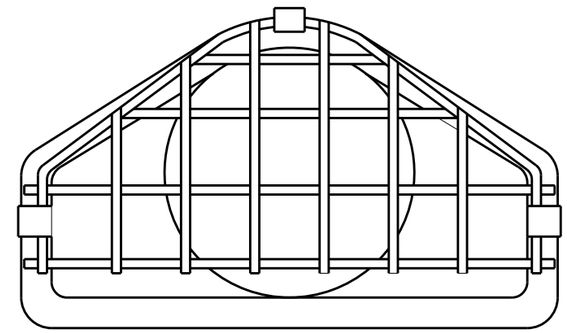

Notes:
1. All metal parts are to be hot galvanized per ASTM A153
2. Drawing not to scale.

Locations:	Pipe Size
Apron 9A	30"

Bar Sizes			
Standard Design			
Pipe Size	Hole Dia. Required	Bolt Dia.	Bar Size
12"-24"	3/4"	5/8"	5/8"
27"-48"	7/8"	3/4"	3/4"
54"-90"	1 1/8"	1"	1"
Bolt Length = Pipe Wall Thickness + 2 1/2"			

Round	
Pipe Size	H
12"	2 1/2"
15"	3"
18"-24"	4"
27"-36"	5"
42"-54"	6"
60"-72"	7"
78"-90"	8"

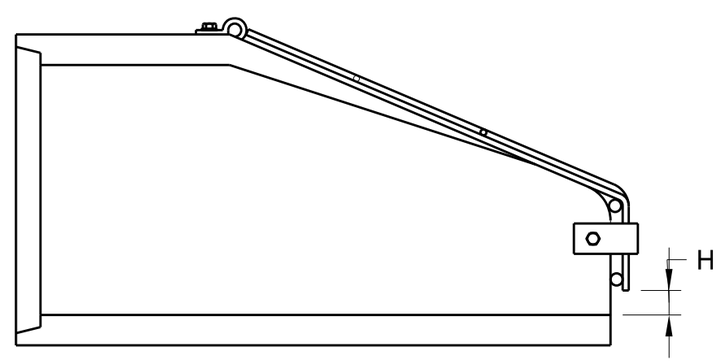

Elevation View

This document was originally issued and sealed by Erin L. Hunker, Registration Number PE- 6657, on 9/11/13 and the original document is stored at the North Dakota Department of Transportation

General Details

US 85 Intersection Improvements

Trash Guard Detail

STATE	PROJECT NO.	SECTION NO.	SHEET NO.
ND	SOIA-7-085(092)183	20	19

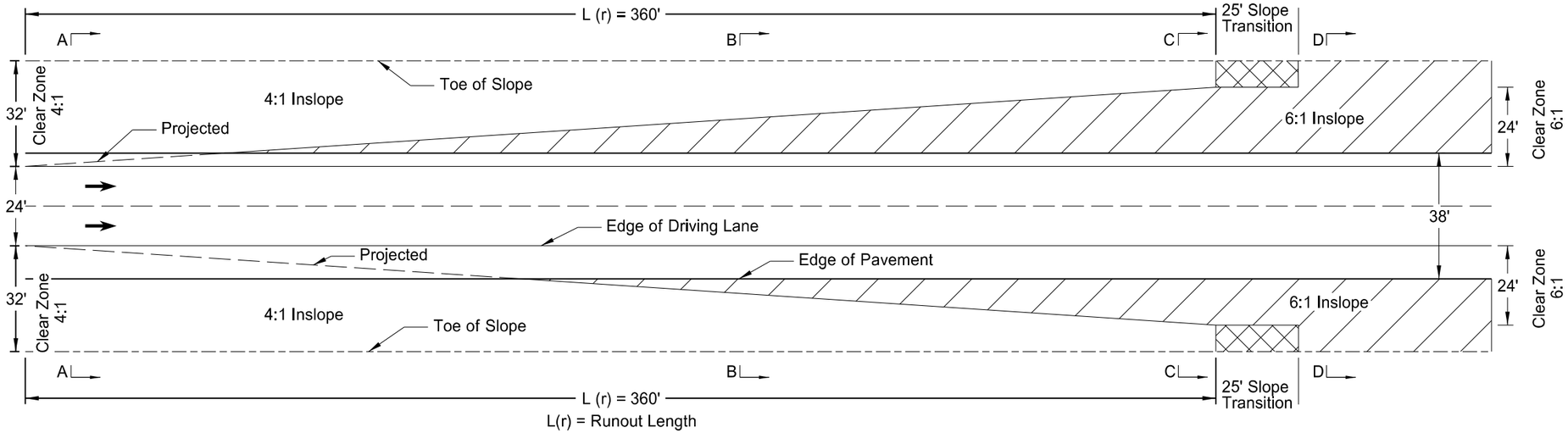

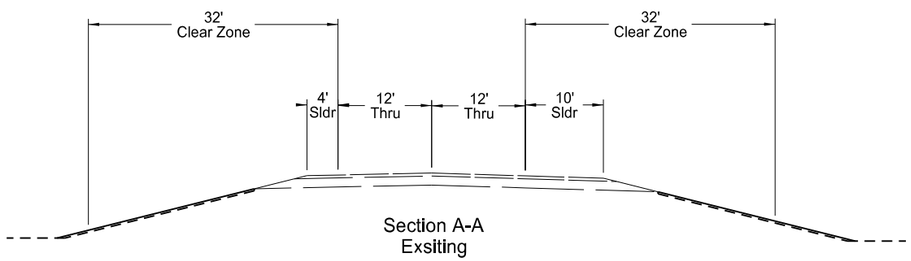

Section A-A
Exsiting

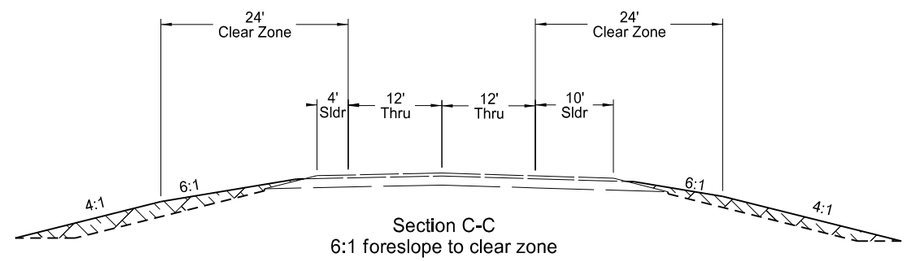

Section C-C
6:1 foreslope to clear zone

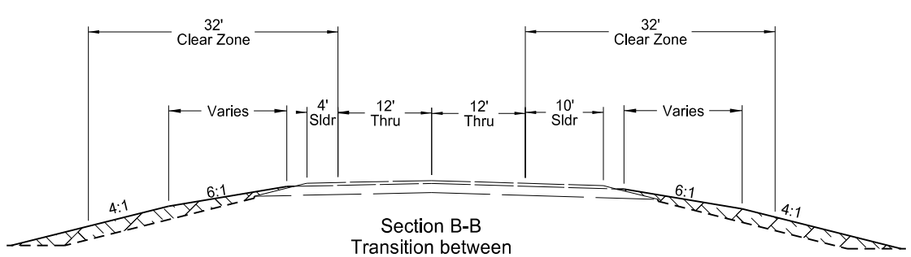

Section B-B
Transition between
4:1 and 6:1 foreslope

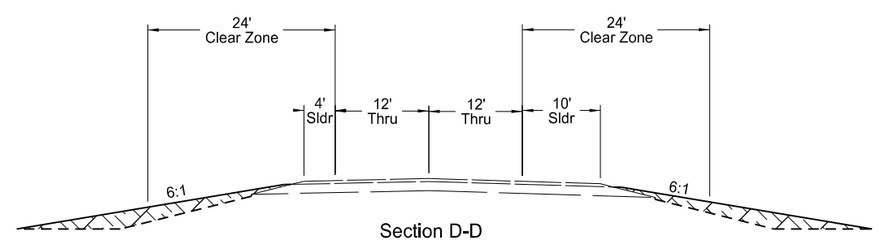

Section D-D
6:1 to ditch

This document was originally issued and sealed by Eric Bach, Registration Number PE- 5506, on 9/12/13 and the original document is stored at the North Dakota Department of Transportation

General Details

US 85 Intersection Improvements

Transition Slope Detail

STATE	PROJECT NO.	SECTION NO.	SHEET NO.
ND	SOIA-7-085(092)183	30	1

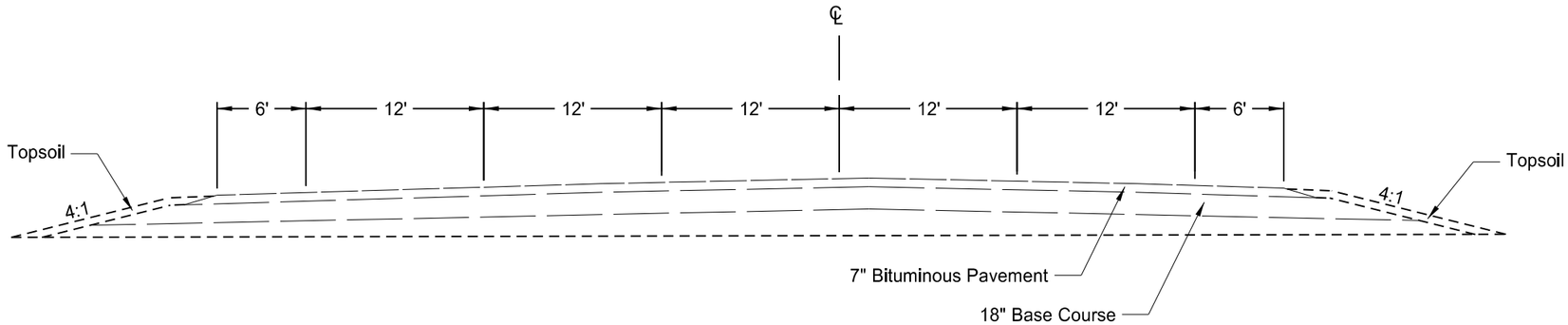

Existing Typical Section
US 85 Sta 9692+33.41 to 9699+90.8

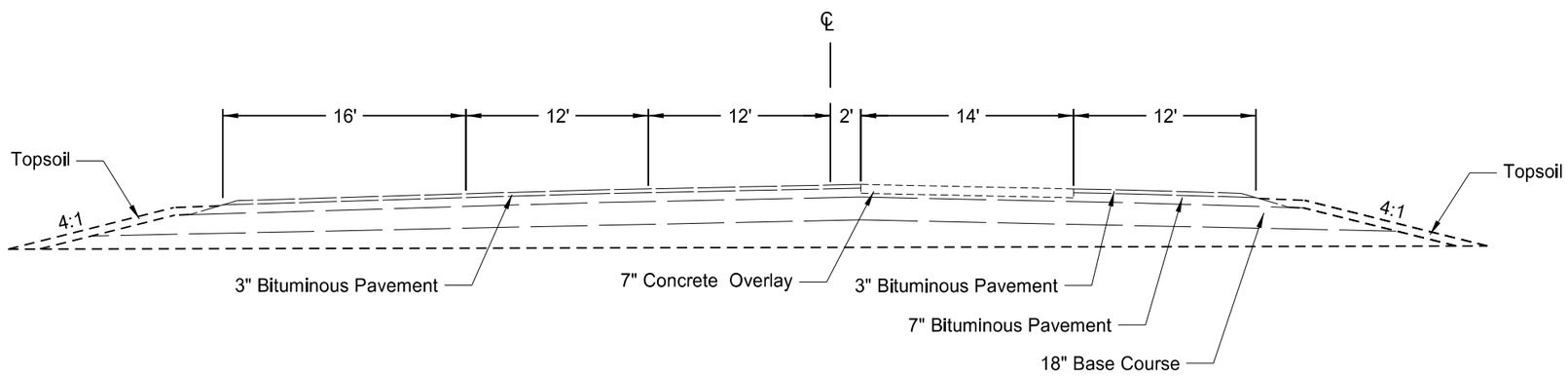

Existing Typical Section
US 85 Sta 9699+90.8 to 9703+90.72

This document was originally issued and sealed by Eric Bach, Registration Number PE- 5506, on 9/12/13 and the original document is stored at the North Dakota Department of Transportation

Existing Typical Sections

US 85 Intersection Improvements

US 85, South of US 2
9692+33.41 to 9703+90.72

STATE	PROJECT NO.	SECTION NO.	SHEET NO.
ND	SOIA-7-085(092)183	30	2

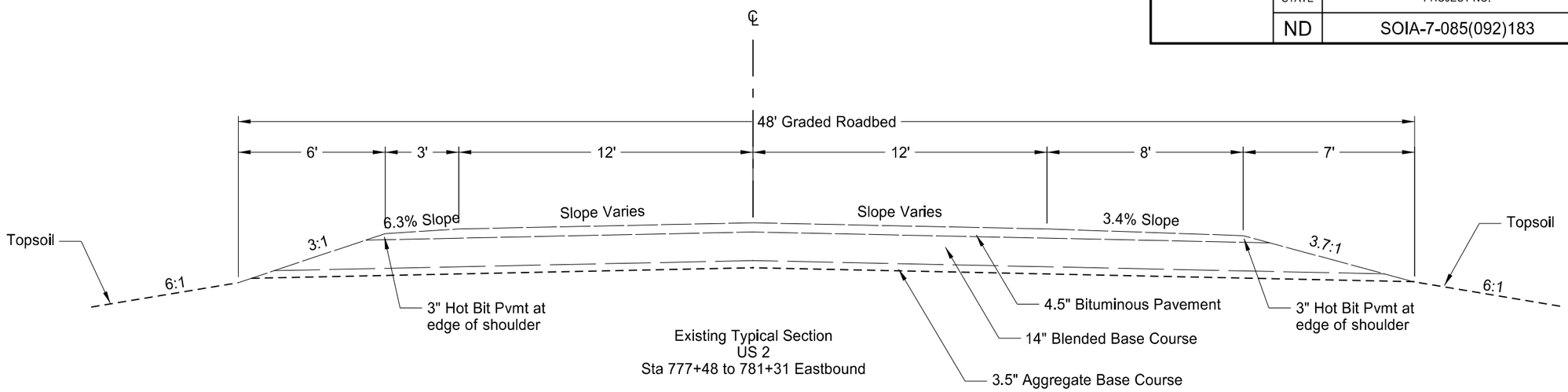

Existing Typical Section
US 2
Sta 777+48 to 781+31 Eastbound

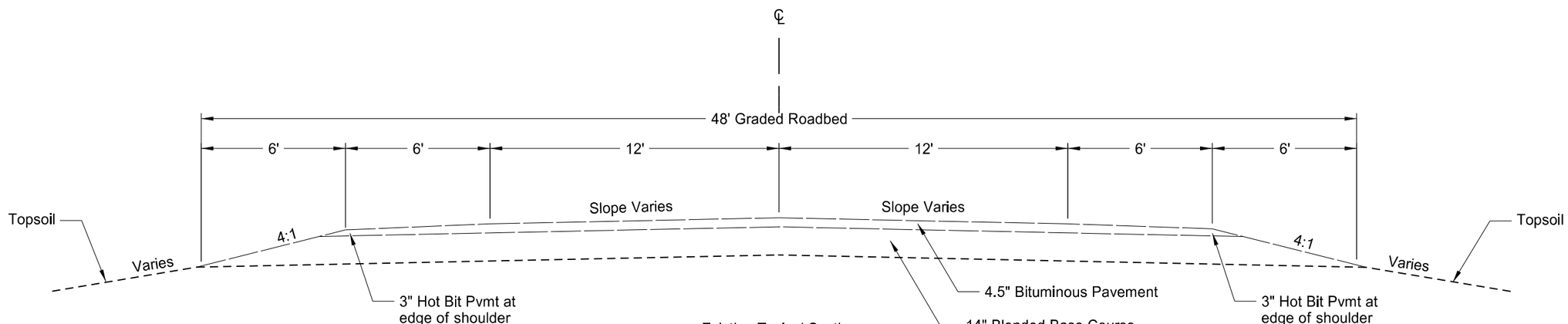

Existing Typical Section
US 2
Sta 782+56 to 784+31 Westbound

This document was originally issued and sealed by Eric Bach, Registration Number PE- 5506, on 9/12/13 and the original document is stored at the North Dakota Department of Transportation

Existing Typical Sections

US 85 Intersection Improvements

US 2 EB 777+48 to 781+31
US 2 WB 782+56 to 784+31

STATE	PROJECT NO.	SECTION NO.	SHEET NO.
ND	SOIA-7-085(092)183	30	3

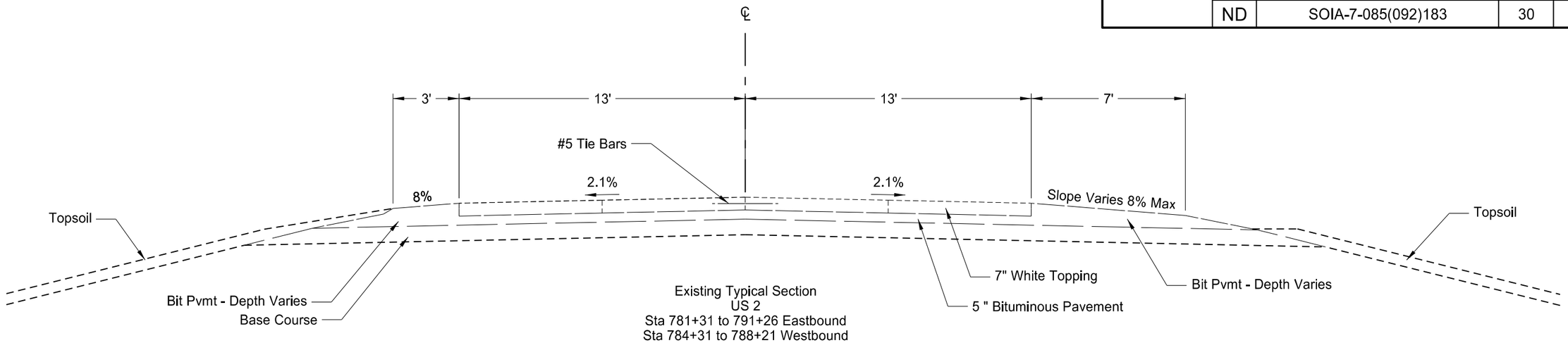

Existing Typical Section
US 2
Sta 781+31 to 791+26 Eastbound
Sta 784+31 to 788+21 Westbound

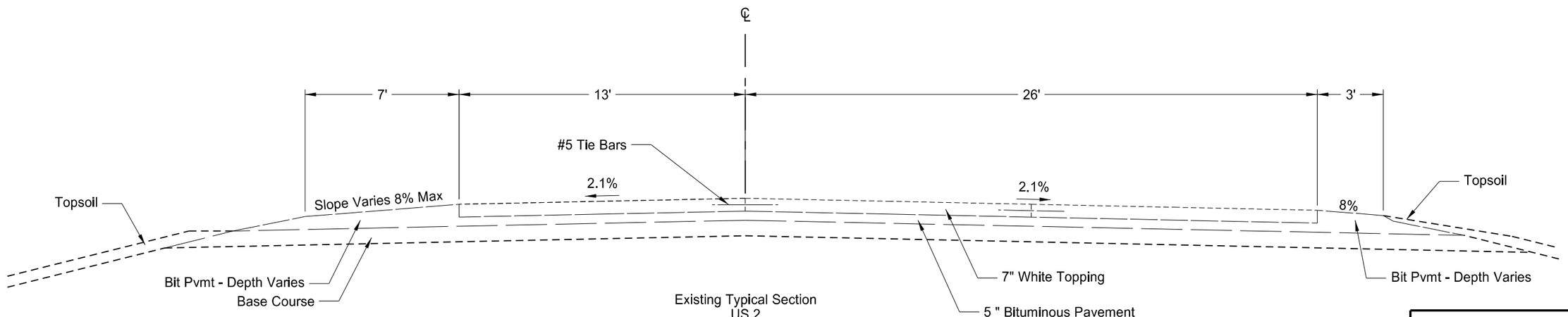

Existing Typical Section
US 2
Sta 788+21 to 791+57 Westbound

This document was originally issued and sealed by Eric Bach, Registration Number PE- 5506, on 9/12/13 and the original document is stored at the North Dakota Department of Transportation

Existing Typical Sections

US 85 Intersection Improvements

US 2 EB 781+31 to 791+26
US 2 WB 784+31 to 791+57

STATE	PROJECT NO.	SECTION NO.	SHEET NO.
ND	SOIA-7-085(092)183	30	4

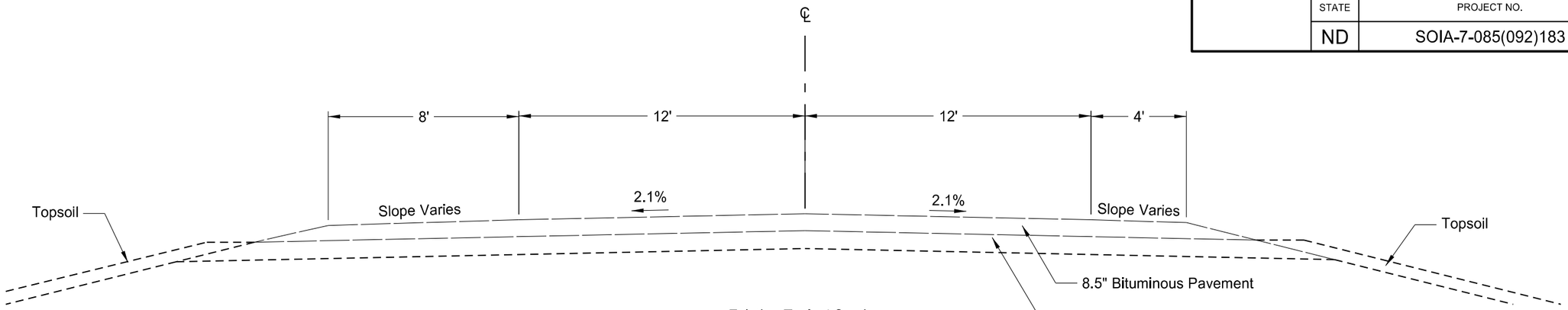

Existing Typical Section
US 2
Sta 791+26 to 797+90 Eastbound
Sta 794+26 to 797+66 Westbound

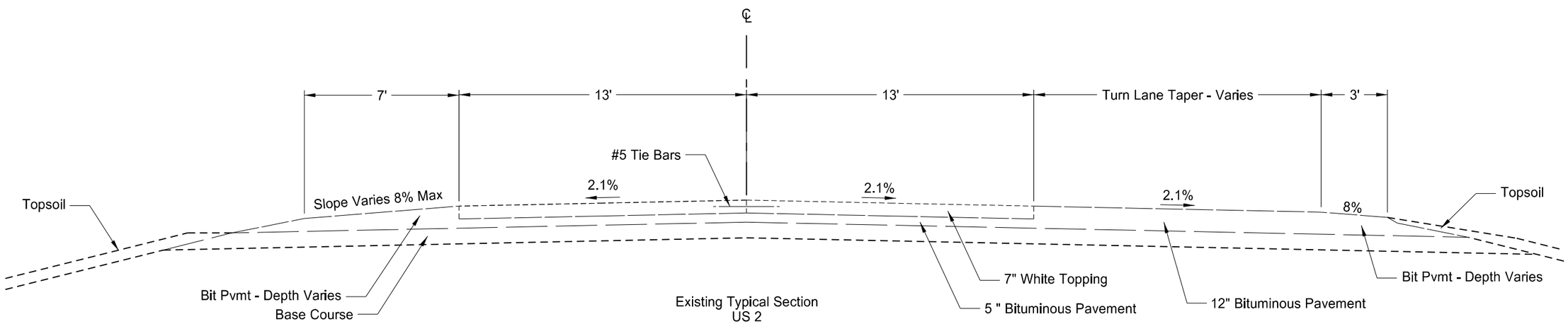

Existing Typical Section
US 2
Sta 791+57 to 794+26 Westbound

This document was originally issued and sealed by Eric Bach, Registration Number PE- 5506, on 9/12/13 and the original document is stored at the North Dakota Department of Transportation

Existing Typical Sections

US 85 Intersection Improvements

US 2 EB 791+26 to 797+90
US 2 WB 791+57 to 797+66

STATE	PROJECT NO.	SECTION NO.	SHEET NO.
ND	SOIA-7-085(092)183	30	5

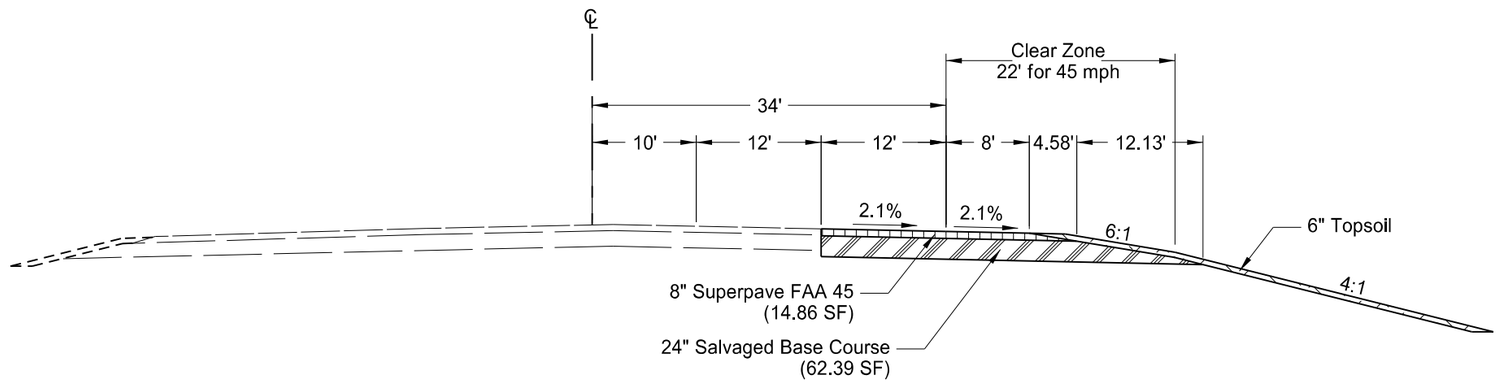

Shoulder Widening
US 85
Sta 9692+33.41 to 9692+97.18

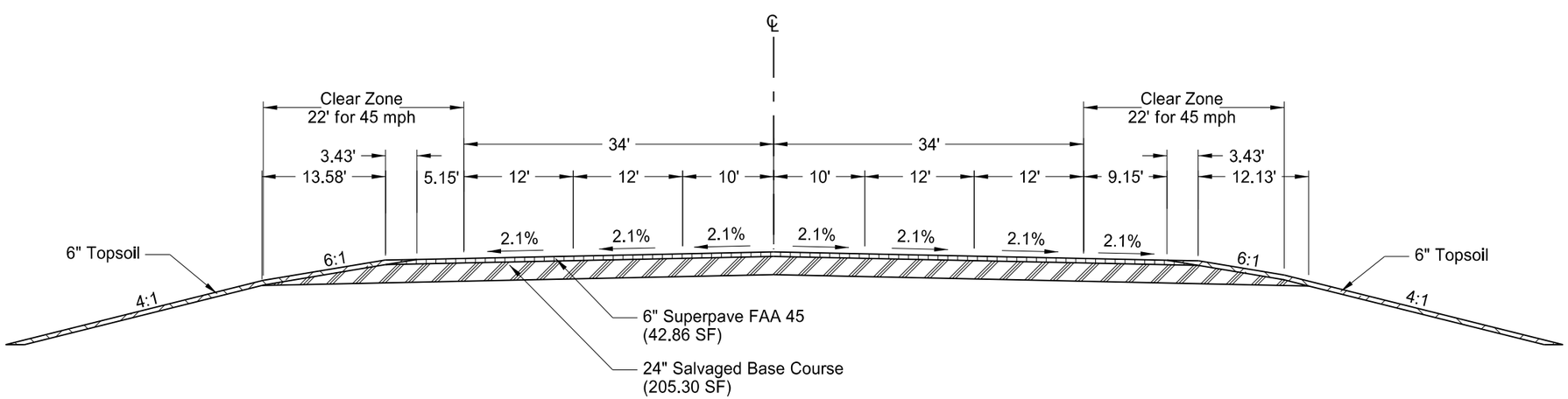

4 Lane Section w/ Paved Median
US 85
Sta 9692+97.18 to 9698+27.18

This document was originally issued and sealed by Eric Bach, Registration Number PE- 5506, on 9/26/13 and the original document is stored at the North Dakota Department of Transportation

Proposed Typical Sections

US 85 Intersection Improvements

US 85

STATE	PROJECT NO.	SECTION NO.	SHEET NO.
ND	SOIA-7-085(092)183	30	6

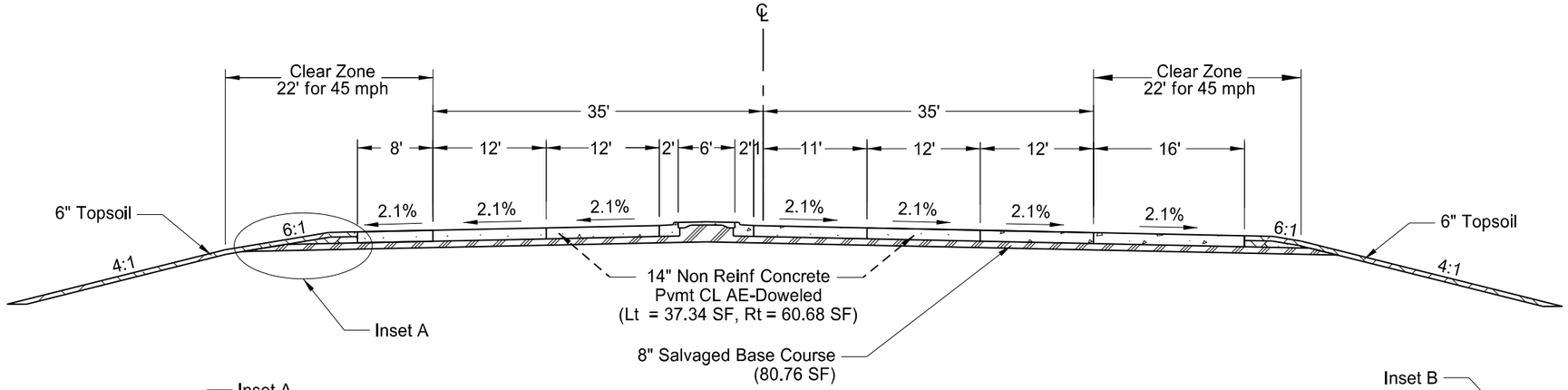

6 Lane Section w/ Raised Median
US 85
Sta 9698+27.18 to 9704+04.32 BK

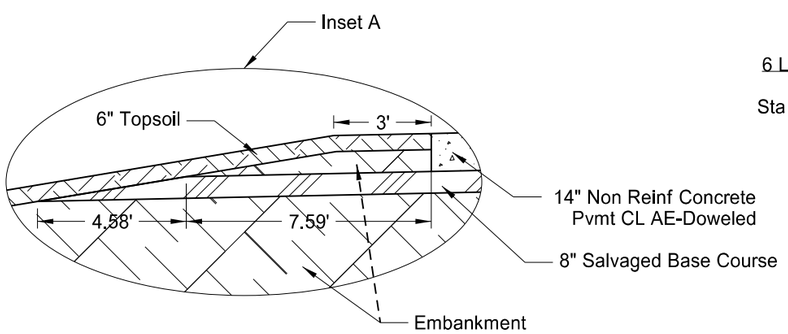

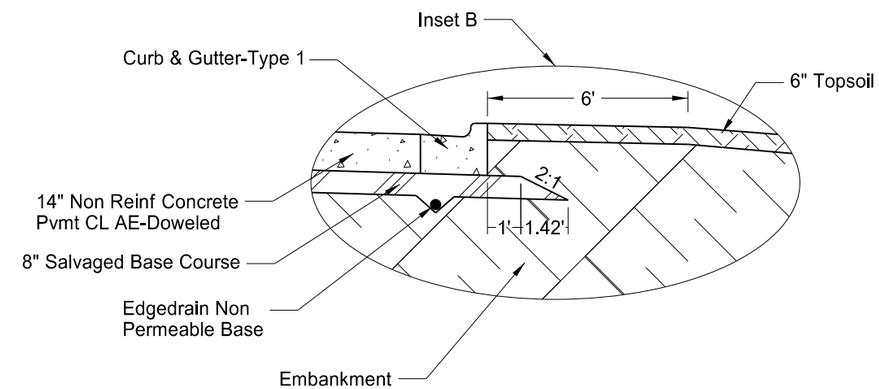

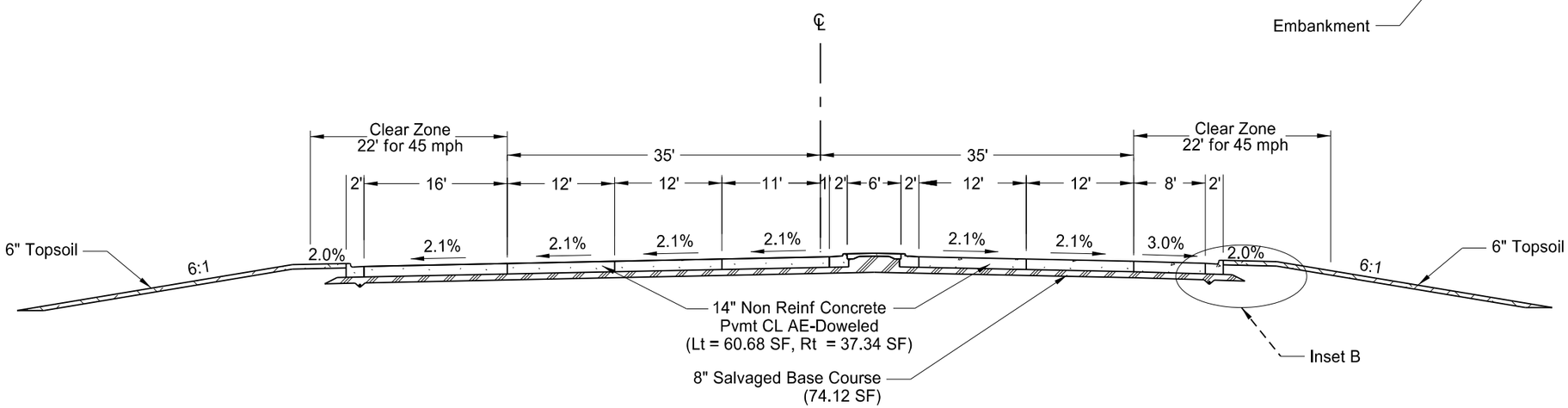

6 Lane Section w/ Raised Median
US 85
Sta 9701+63.04 AH to 9710+89.69

Note: See plan sheet 20-9 for concrete median paving details.

This document was originally issued and sealed by Eric Bach, Registration Number PE- 5506, on 9/26/13 and the original document is stored at the North Dakota Department of Transportation

Proposed Typical Sections

US 85 Intersection Improvements

US 85

STATE	PROJECT NO.	SECTION NO.	SHEET NO.
ND	SOIA-7-085(092)183	30	7

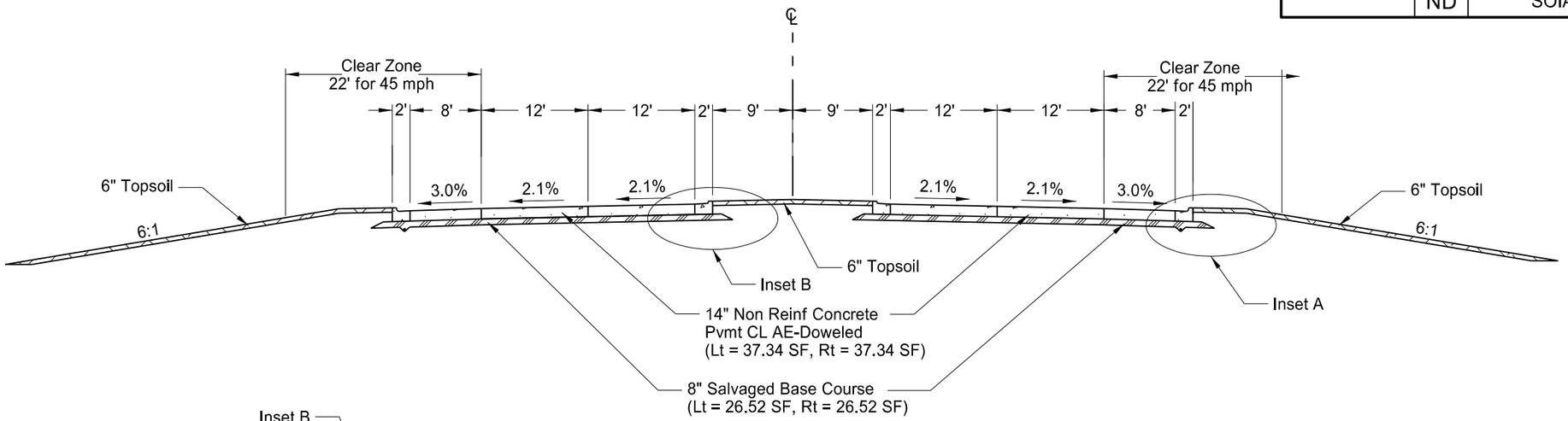

4 Lane Section w/ Raised Median
US 85
Sta 9710+89.69 to 9711+50

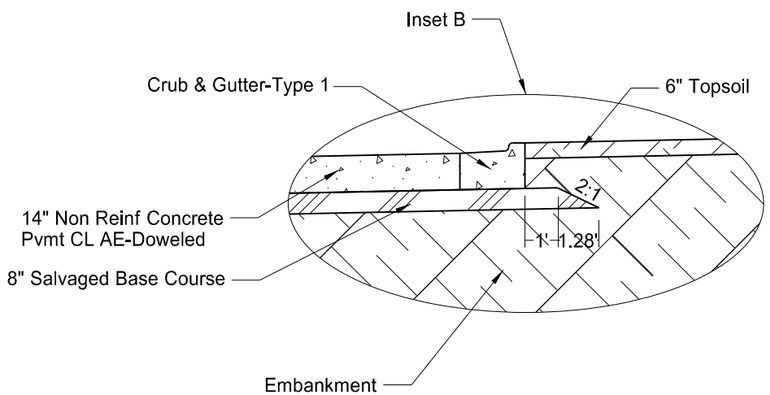

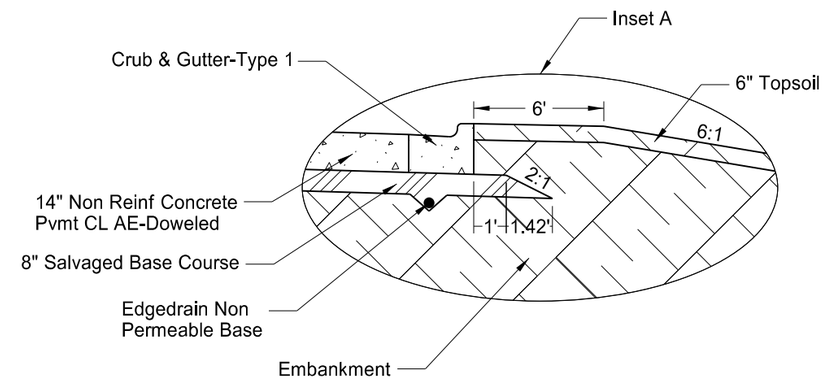

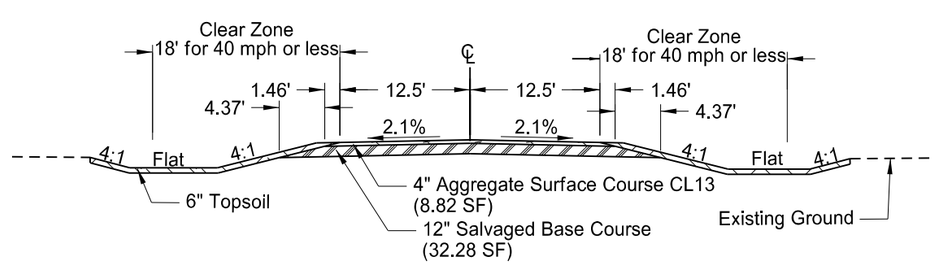

Gravel Frontage Road
US 2 EB
Sta 781+05.05 to 783+20.69

This document was originally issued and sealed by Eric Bach, Registration Number PE- 5506, on 9/12/13 and the original document is stored at the North Dakota Department of Transportation

Proposed Typical Sections

US 85 Intersection Improvements

US 85 & US 2

STATE	PROJECT NO.	SECTION NO.	SHEET NO.
ND	SOIA-7-085(092)183	30	8

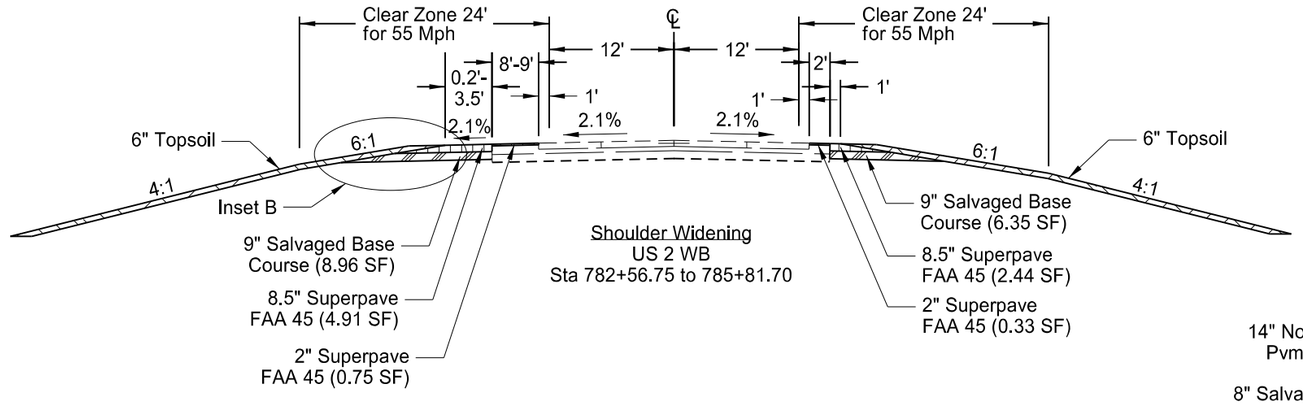

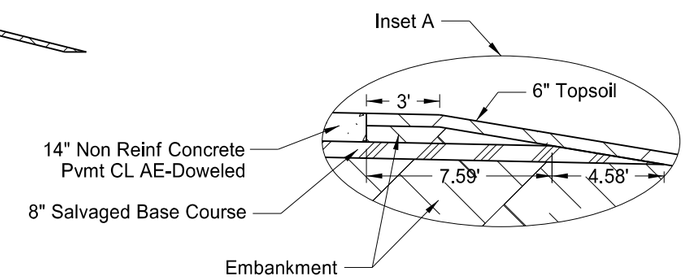

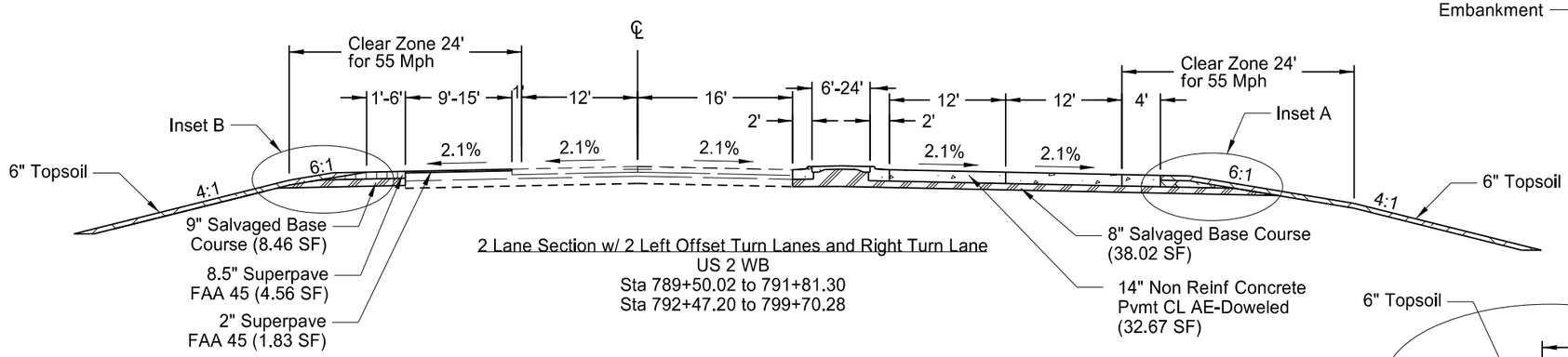

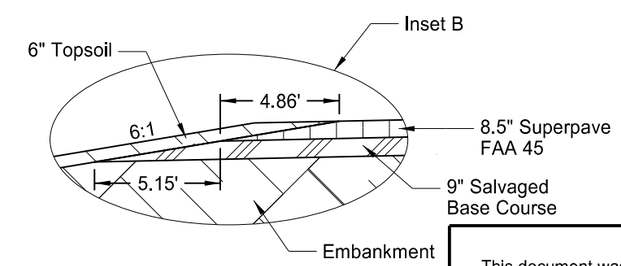

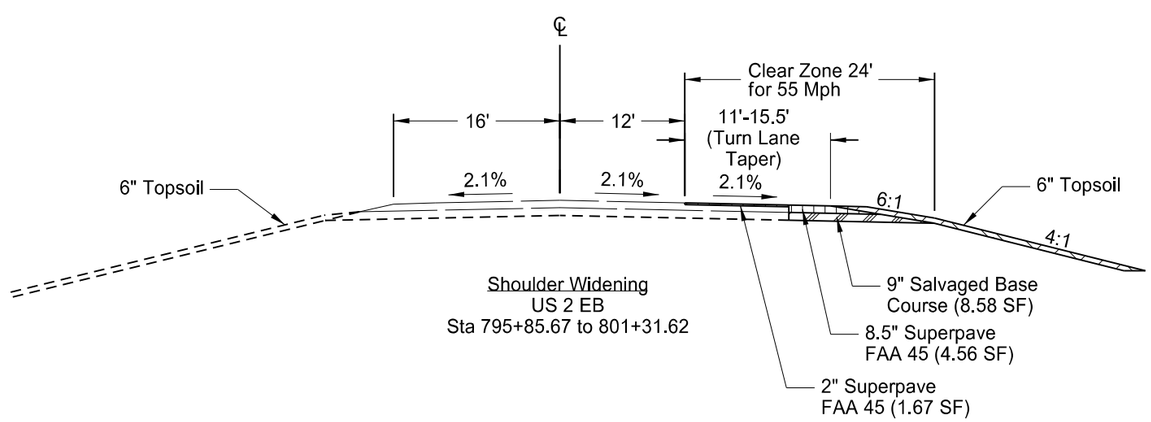

This document was originally issued and sealed by Eric Bach, Registration Number PE- 5506, on 9/12/13 and the original document is stored at the North Dakota Department of Transportation

Proposed Typical Sections

US 85 Intersection Improvements

US 2

STATE	PROJECT NO.	SECTION NO.	SHEET NO.
ND	SOIA-7-085(092)183	30	9

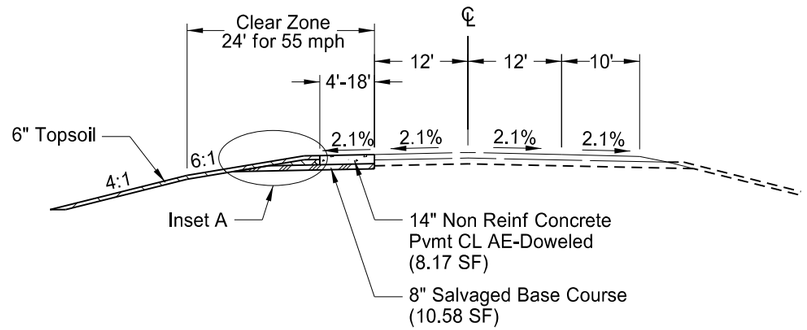

2 Lane
US 2 EB Sta 775+50.55 to 777+48.61

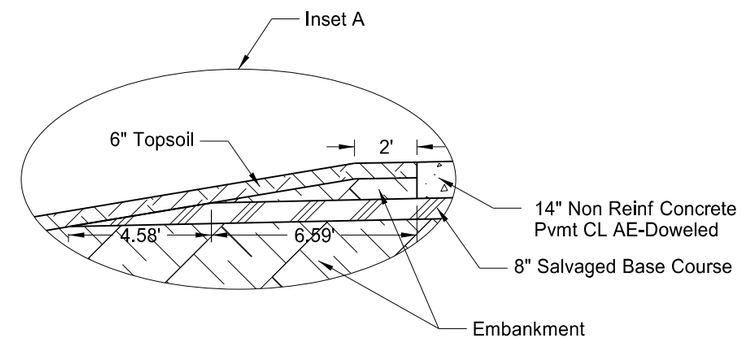

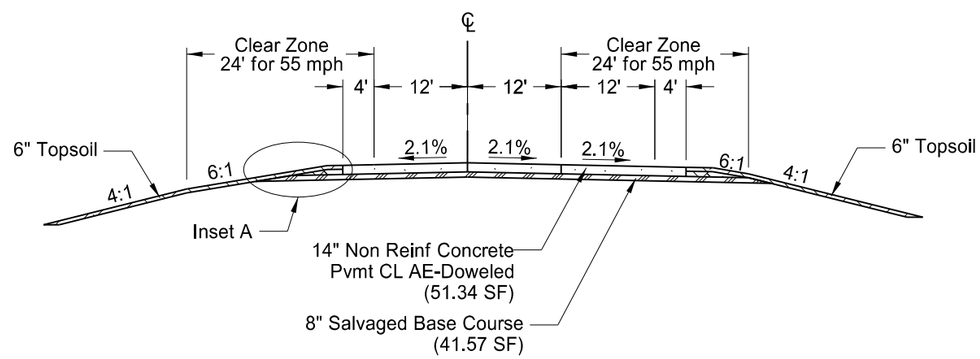

2 Lane Section w/ Acceleration Lane
US 2 WB Sta 785+81.70 to 786+48.16
US 2 EB Sta 789+98.28 to 795+85.67

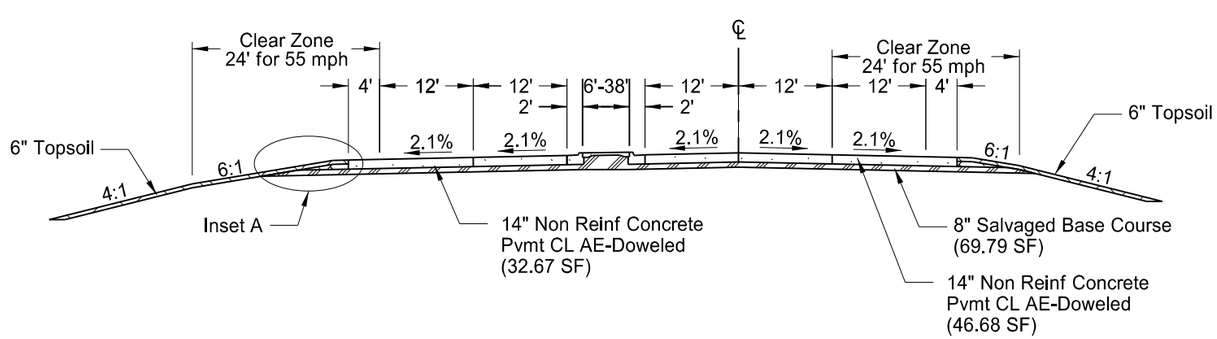

2 Lane Section w/ 2 Left Offset Turn Lanes and Right Turn Lane
US 2 EB Sta 777+48.61 to 786+48.47
US 2 WB Sta 789+00.21 to 789+50.02
US 2 WB Sta 791+81.30 to 792+47.20

Note: See plan sheet 20-9 for concrete median paving details.

This document was originally issued and sealed by Eric Bach, Registration Number PE- 5506, on 9/12/13 and the original document is stored at the North Dakota Department of Transportation

Proposed Typical Sections

US 85 Intersection Improvements

US 2

STATE	PROJECT NO.	SECTION NO.	SHEET NO.
ND	SOIA-7-085(092)183	30	10

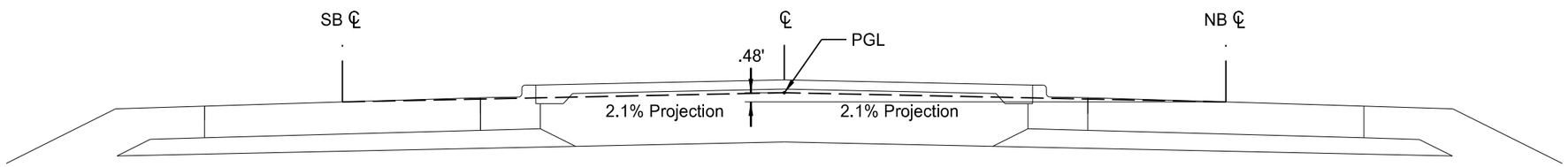

Profile Grade Line

This document was originally issued and sealed by Eric Bach, Registration Number PE- 5506, on 9/12/13 and the original document is stored at the North Dakota Department of Transportation

Proposed Typical Sections

US 85 Intersection Improvements

US 85
Profile Grade Lines

Note: PGL = Profile Grade Line
See Section 60

STATE	PROJECT NO.	SECTION NO.	SHEET NO.
ND	SOIA-7-085(092)183	40	1

202	0136	Removal Of Pavement		
		Sta 9692+33 to Sta 9695+00	2004	TON
		Total =	2004	TON
202	0153	Saw Bituminous Surfacing - Full Depth		
		Sta 9692+33 22' RT to Sta 9692+33 42' RT	20	LF
		Sta 9692+33 22' RT to Sta 9692+97 22' RT	64	LF
		Sta 9692+97 44' LT to Sta 9692+97 22' RT	66	LF
		Total =	150	LF

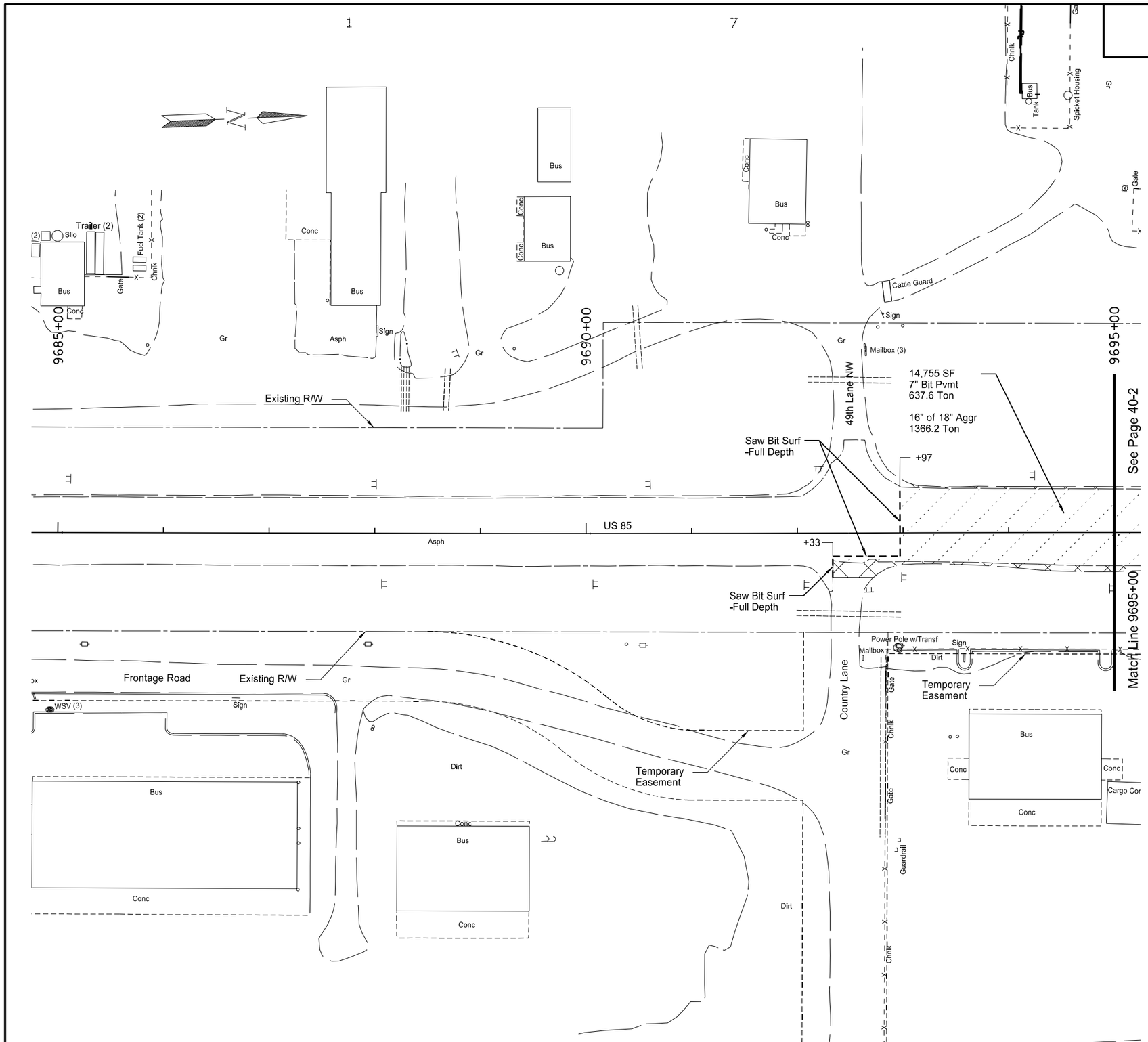

LEGEND

Aggregate Removal
(Quantity included in Common Excavation Bid Item)

Asphalt Removal

Concrete Removal

Milling Pavement Surface

This document was originally issued and sealed by Eric Bach, Registration Number PE- 5506, on 9/26/13 and the original document is stored at the North Dakota Department of Transportation

Removals

US 85 Intersection Improvements

US 85
9685+00 to 9695+00

STATE	PROJECT NO.	SECTION NO.	SHEET NO.
ND	SOIA-7-085(092)183	40	2

202	0136	Removal Of Pavement		
		Sta 9695+00 to 9704+04.32	12462	TON
		Total =	12462	TON
202	0153	Saw Bituminous Surfacing - Full Depth		
		Sta 9701+27 112' RT to Sta 9701+38 131' RT	22	LF
		Sta 9702+82 322' LT to Sta 9703+08 322' LT	26	LF
		Total =	48	LF

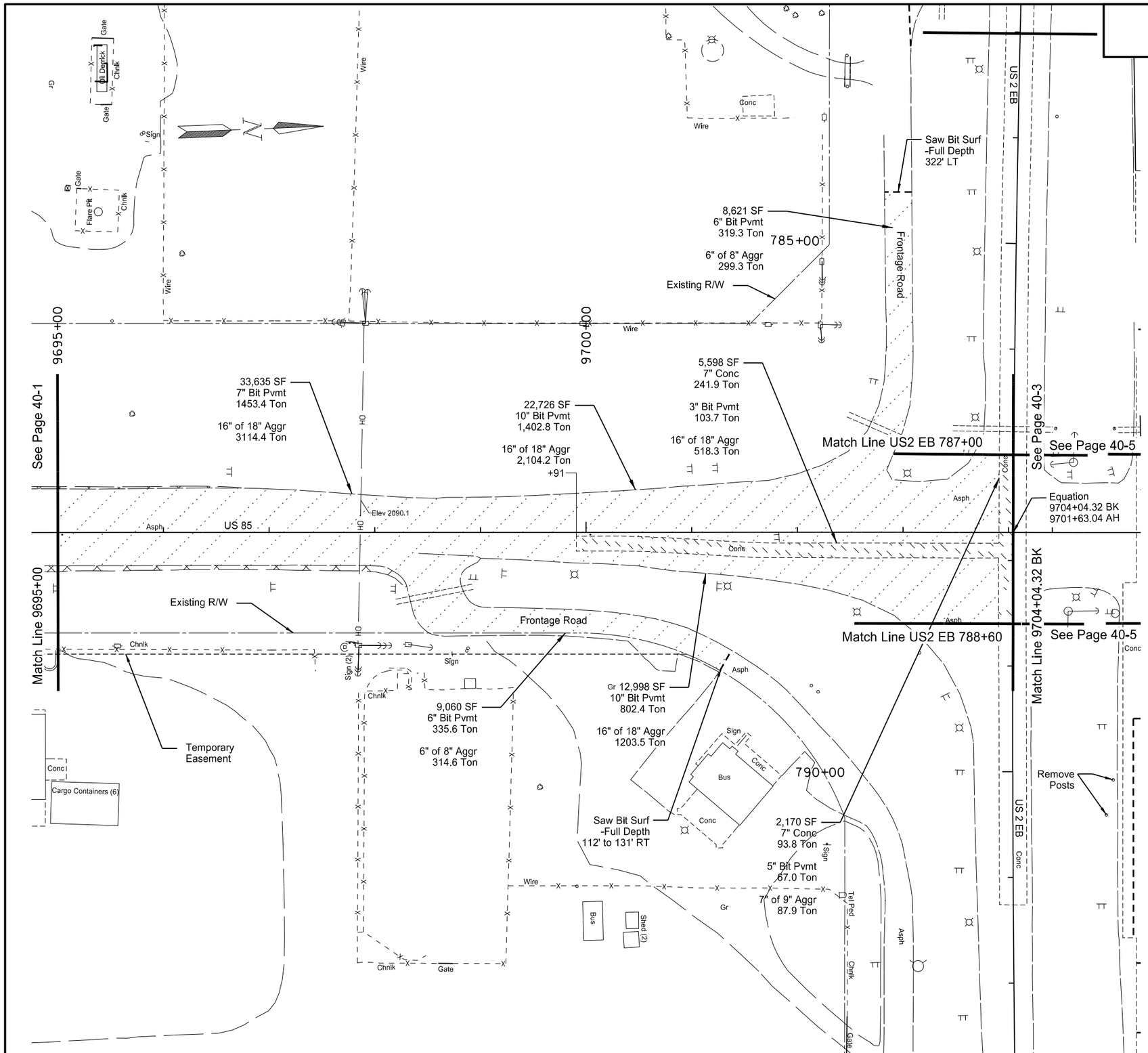

LEGEND

Aggregate Removal
(Quantity included in Common Excavation Bid Item)

Asphalt Removal

Concrete Removal

Milling Pavement Surface

This document was originally issued and sealed by Eric Bach, Registration Number PE- 5506, on 9/26/13 and the original document is stored at the North Dakota Department of Transportation

Removals

US 85 Intersection Improvements

US 85
9695+00 to 9704+04.32 BK

STATE	PROJECT NO.	SECTION NO.	SHEET NO.
ND	SOIA-7-085(092)183	40	3

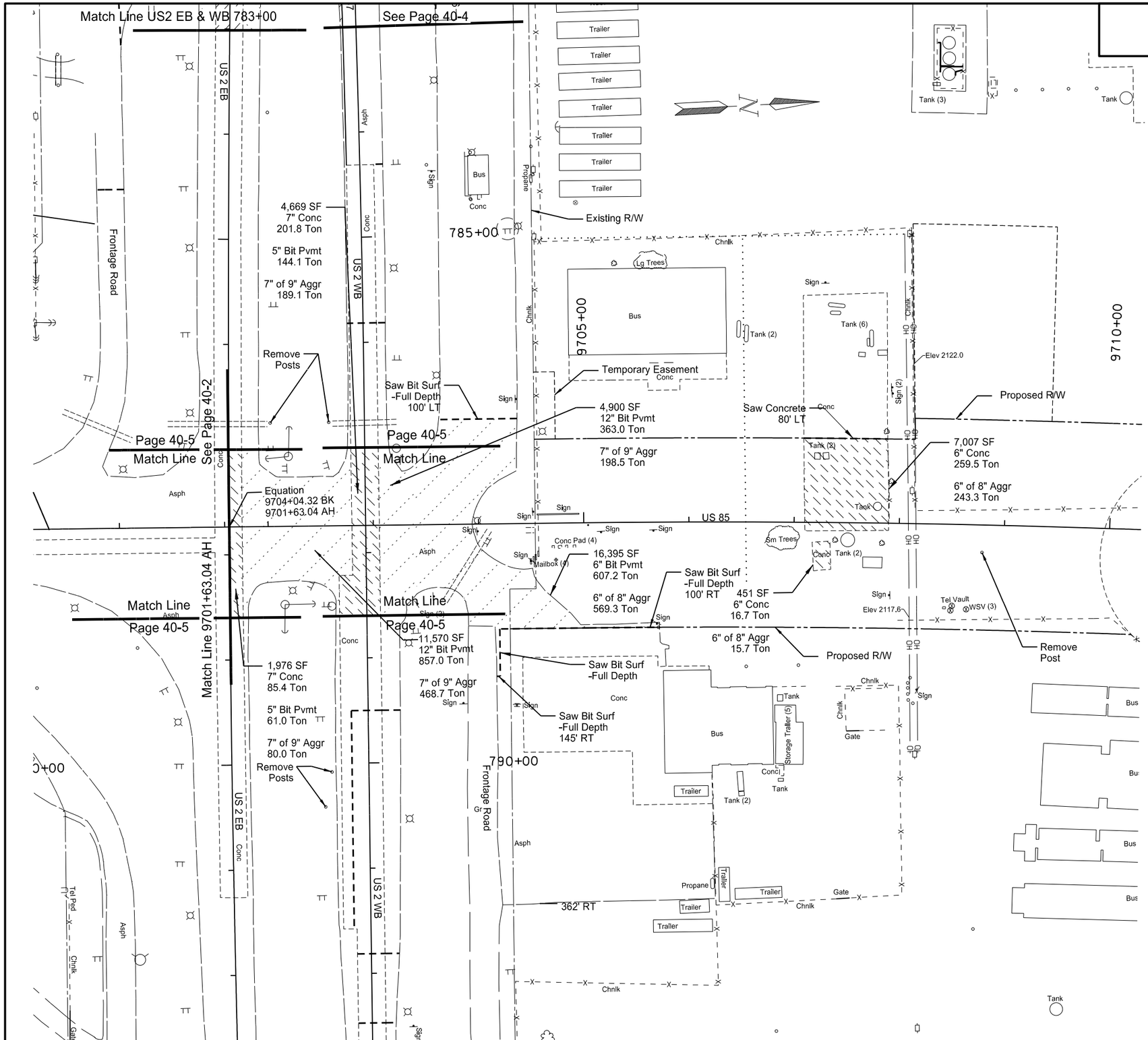

202	0119	Saw Concrete		
		Sta 9707+09 80' LT to Sta 9707+87 80' LT	80	LF
		Total =	80	LF
202	0136	Removal Of Pavement		
		Sta 9701+63.04 AH to Sta 9710+00	4361	TON
		Total =	4361	TON
202	0153	Saw Bituminous Surfacing - Full Depth		
		Sta 9703+63 100' LT to Sta 9704+38 100' LT	74	LF
		Sta 9704+16 145' RT to Sta 9704+19 145' RT	3	LF
		Sta 9704+19 145' RT to Sta 9704+19 100' RT	45	LF
		Sta 9704+19 100' RT to Sta 9705+72 100' RT	152	LF
		Total =	274	LF

LEGEND

Aggregate Removal
(Quantity included in Common Excavation Bid Item)

Asphalt Removal

Concrete Removal

Milling Pavement Surface

This document was originally issued and sealed by Eric Bach, Registration Number PE- 5506, on 9/12/13 and the original document is stored at the North Dakota Department of Transportation

Removals

US 85 Intersection Improvements

US 85
9701+63.04 AH to 9710+00

STATE	PROJECT NO.	SECTION NO.	SHEET NO.
ND	SOIA-7-085(092)183	40	4

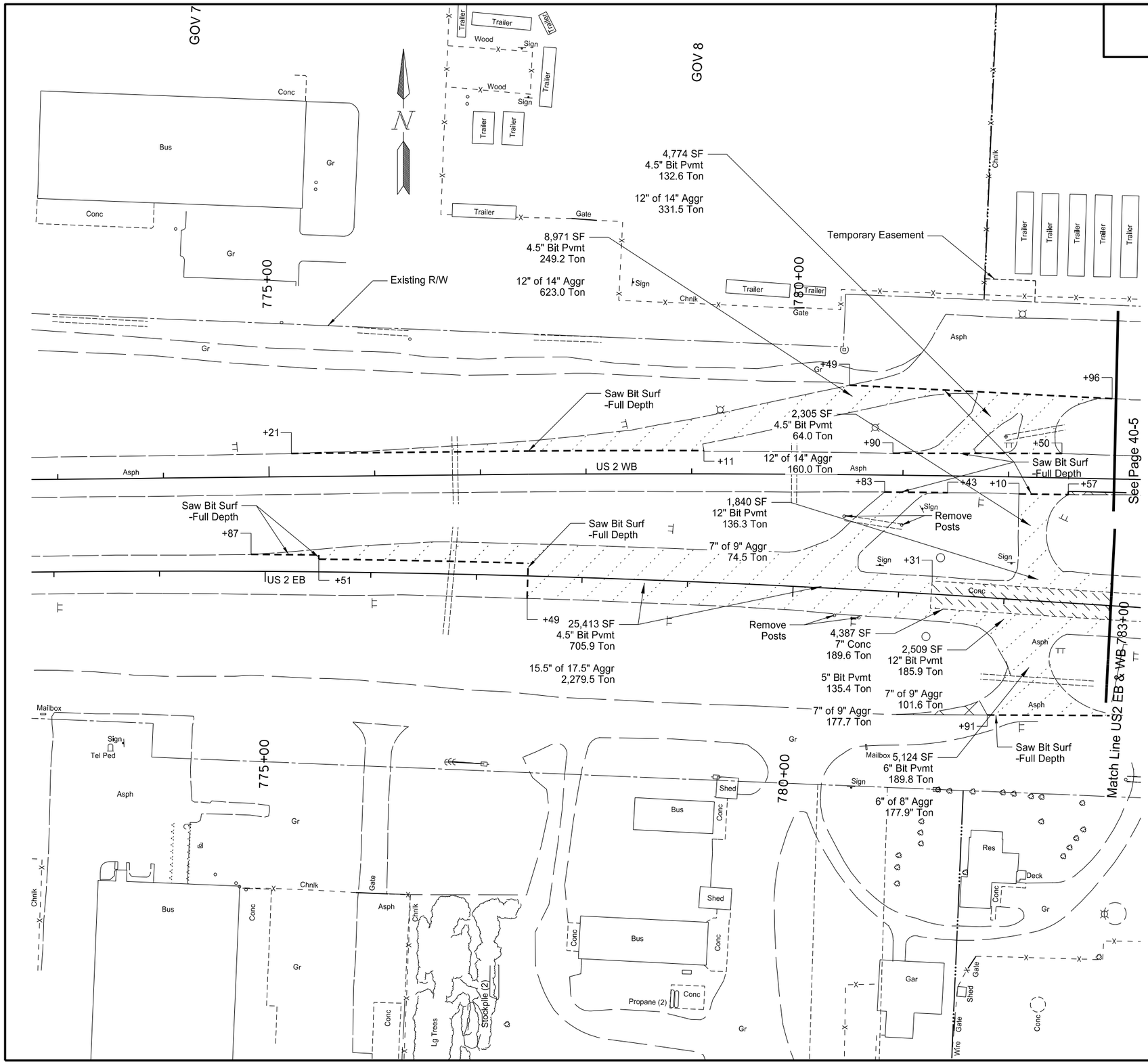

202	0136	Removal Of Pavement		
US2	EB	Sta 774+87 to Sta 783+00	5915	TON
		Total =	5915	TON
202	0153	Saw Bituminous Surfacing - Full Depth		
US2	EB	Sta 774+87 16' LT to Sta 775+51 16' LT	64	LF
US2	EB	Sta 775+51 16' LT to Sta 775+51 12' LT	4	LF
US2	EB	Sta 775+51 12' LT to Sta 777+49 12' LT	198	LF
US2	EB	Sta 777+49 12' LT to Sta 777+49 21' RT	33	LF
US2	EB	Sta 781+91 111' RT to Sta 783+00 104' RT	109	LF
US2	WB	Sta 775+21 22' LT to Sta 779+11 22' LT	391	LF
US2	WB	Sta 780+49 85' LT to Sta 782+96 76' LT	249	LF
US2	WB	Sta 780+83 16' RT to Sta 781+43 16' RT	60	LF
US2	WB	Sta 780+90 21' LT to Sta 782+50 23' LT	160	LF
US2	WB	Sta 782+10 16' RT to Sta 782+57 16' RT	47	LF
		Total =	1315	LF
411	0105	Milling Pavement Surface		
US3	WB	Sta 782+57 to Sta 783+00	13	SY
		Total =	13	SY

LEGEND

Aggregate Removal
(Quantity included in Common Excavation Bid Item)

Asphalt Removal

Concrete Removal

Milling Pavement Surface

This document was originally issued and sealed by Eric Bach, Registration Number PE- 5506, on 9/12/13 and the original document is stored at the North Dakota Department of Transportation

Removals

US 85 Intersection Improvements

US 2
774+87 to 783+00

STATE	PROJECT NO.	SECTION NO.	SHEET NO.
ND	SOIA-7-085(092)183	40	5

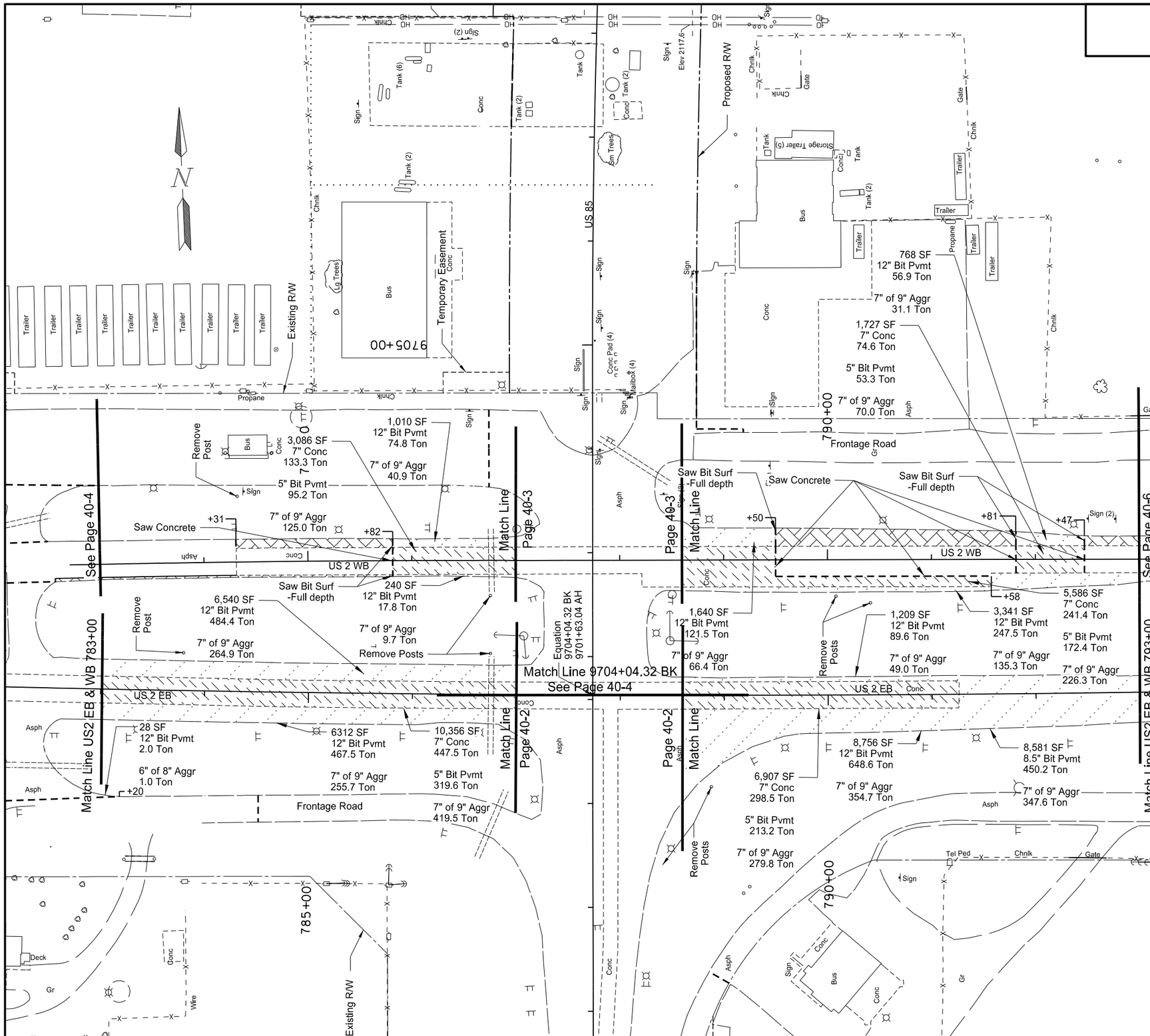

202	0119	Saw Concrete		
US2	WB	Sta 785+96 13' RT to Sta 785+96 13' LT	26	LF
US2	WB	Sta 789+50 16' RT to Sta 789+50 13' LT	29	LF
US2	WB	Sta 789+50 16' RT to Sta 791+58 16' RT	208	LF
US2	WB	Sta 791+81 13' RT to Sta 791+81 13' LT	26	LF
US2	WB	Sta 792+47 13' RT to Sta 792+47 13' LT	26	LF
		Total =	315	LF
202	0136	Removal Of Pavement		
US2	EB	Sta 783+00 to Sta 787+00	2662	TON
US2	EB	Sta 788+60 to Sta 793+00	2731	TON
US2	WB	Sta 783+00 to Sta 787+00	497	TON
US2	WB	Sta 788+60 to Sta 793+00	1497	TON
		Total =	7387	TON
202	0153	Saw Bituminous Surfacing - Full Depth		
US2	EB	Sta 783+00 104' RT to Sta 783+20 103' RT	20	LF
US2	WB	Sta 785+82 13' LT to Sta 785+82 21' LT	8	LF
US2	WB	Sta 785+82 13' RT to Sta 785+82 15' RT	2	LF
US2	WB	Sta 789+50 13' LT to Sta 789+50 31' LT	18	LF
US2	WB	Sta 791+81 27' LT to Sta 791+81 13' LT	14	LF
US2	WB	Sta 792+47 23' LT to Sta 792+47 13' LT	10	LF
		Total =	72	LF
411	0105	Milling Pavement Surface		
US2	WB	Sta 783+00 to Sta 785+82 - 13' RT to 15' RT	63	SY
US2	WB	Sta 784+31 to Sta 785+82 - 13' LT to 22' LT	147	SY
US2	WB	Sta 789+50 to Sta 791+81 - 13' LT to 31' LT	415	SY
US2	WB	Sta 792+47 to Sta 793+00 - 13' LT to 23' LT	55	SY
		Total =	680	SY

LEGEND

Aggregate Removal
(Quantity included in Common Excavation Bid Item)

Asphalt Removal

Concrete Removal

Milling Pavement Surface

This document was originally issued and sealed by Eric Bach, Registration Number PE- 5506, on 9/12/13 and the original document is stored at the North Dakota Department of Transportation

Removals

US 85 Intersection Improvements

US 2
783+00 to 793+00

STATE	PROJECT NO.	SECTION NO.	SHEET NO.
ND	SOIA-7-085(092)183	40	6

202	0136	Removal Of Pavement		
US2	EB	Sta 793+00 to Sta 795+86	1076	TON
US2	WB	Sta 793+00 to Sta 797+66	412	TON
		Total =	1488	TON
202	0153	Saw Bituminous Surfacing - Full Depth		
US2	EB	Sta 795+86 23' RT to Sta 797+66 16' LT	39	LF
US2	WB	Sta 794+26 13' RT to Sta 795+00 12' RT	74	LF
US2	WB	Sta 795+00 12' RT to Sta 799+70 12' RT	470	LF
US2	WB	Sta 799+70 12' RT to Sta 799+70 18' RT	6	LF
		Total =	589	LF
411	0105	Milling Pavement Surface		
US2	EB	Sta 795+86 to Sta 796+36 - 23' RT to 16' LT	219	SY
US2	EB	Sta 796+36 to Sta 801+32 - 12' RT to 24' RT	625	SY
US2	WB	Sta 793+00 to Sta 794+26 - 13' LT to 22' LT	130	SY
US2	WB	Sta 794+26 to Sta 796+15 - 12' LT to 22' LT	211	SY
		Total =	1185	SY

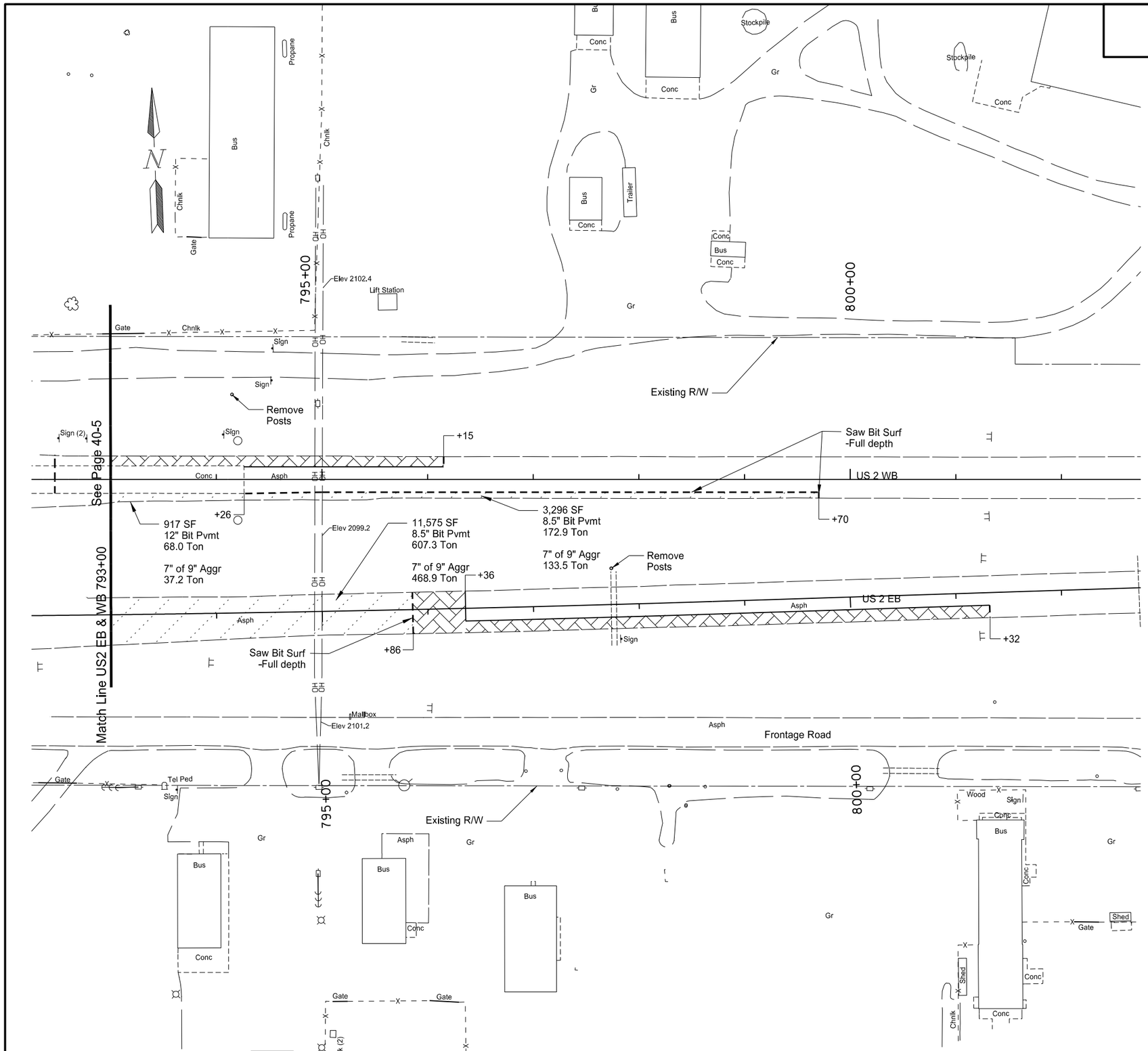

LEGEND

Aggregate Removal
(Quantity included in Common Excavation Bid Item)

Asphalt Removal

Concrete Removal

Milling Pavement Surface

This document was originally issued and sealed by Eric Bach, Registration Number PE- 5506, on 9/12/13 and the original document is stored at the North Dakota Department of Transportation

Removals

US 85 Intersection Improvements

US 2
793+00 to 797+90

Hydraulic Data For SOIA-7-085(092)183
(A)

Alignment	Station	Existing Pipe	Proposed Pipe Size (IN)	Drainage Area (AC)	25-Year Data				100-Year Data	
					Design Discharge (CFS)	Design Headwater (FT)	Design Velocity (FPS)	Design Stage (NAVD 88)	100-Year Discharge (CFS)	100-Year Stage (NAVD 88)
US 2 WB	776+76	24" x 64' RCP	24 (B)	17	11	1.8	9.4	2094.58	19	2095.79
US 2 EB	776+76	24" x 102' RCP	24 (B) (C)	3	5	1.3		2095.95	7	2096.25
US 2 WB	795+78		22 x 13	9	8	1.0	4.0	2061.61	17	2062.92
US 2 WB	795+82		22 x 13			1.0	4.1	2061.61		2062.92
US 2 EB	797+76	18" x 70' RCP	18 (B)	2	4	1.4	8.6	2058.37	7	2058.93

(A) Hydraulic data provided is for smooth-wall conduits.
(B) Broken back cuvlert - see Cross Sections for details.
(C) Includes slotted section for reinforced concrete pipe.

This document was originally issued and sealed by Erin L. Hunker, Registration Number PE- 6657, on 9/26/13 and the original document is stored at the North Dakota Department of Transportation

Culvert Hydraulic Data

US 85 Intersection Improvements
US 85
Proposed
9670+00 to 9713+00

STATE	PROJECT NO.	SECTION NO.	SHEET NO.
ND	SOIA-7-085(092)183	50	2

INLET AND MANHOLE SUMMARY

Inlet No.	1A
Type	Inlet - Type 2
Sta.	9711+38.93 R 2 - 44' Lt. (PR85)
Grate Type	V
Grate Elev.	2094.45
Base Elev.	2089.97
Invert Elev.	2090.16
H' Dist.	4.15

Inlet No.	1B
Type	Inlet - Type 2
Sta.	9711+38.93 R 2 - 44' Rt. (PR85)
Grate Type	V
Grate Elev.	2094.45
Base Elev.	2089.97
Invert Elev.	2090.16
H' Dist.	4.15

Manhole No.	1 - 48In.
Type	Manhole
Sta.	9711+38.93 R 2 - 0' Rt. (PR85)
Casting Type	Solid Cover
Top Elev.	2095.95
Base Elev.	2087.10
Invert Elev.	2087.35
Riser	7.35

24 In. Conduit S	2087.35
15 In. Conduit W	2089.99
15 In. Conduit E	2089.99
18 In. Conduit N	2087.85

Inlet No.	2A
Type	Inlet - Type 2
Sta.	9707+75.52 R 2 - 52' Lt. (PR85)
Grate Type	V
Grate Elev.	2093.68
Base Elev.	2089.20
Invert Elev.	2089.39
H' Dist.	4.15

Inlet No.	2B
Type	Inlet - Type 2
Sta.	9707+75.52 R 2 - 44' Rt. (PR85)
Grate Type	V
Grate Elev.	2093.77
Base Elev.	2089.29
Invert Elev.	2089.48
H' Dist.	4.15

Manhole No.	2 - 48In.
Type	Manhole
Sta.	9707+75.52 R 2 - 6' Rt. (PR85)
Casting Type	Solid Cover
Top Elev.	2095.22
Base Elev.	2085.65
Invert Elev.	2085.9
Riser	8.07

24 In. Conduit S	2085.90
15 In. Conduit W	2089.15
24 In. Conduit N	2085.90
15 In. Conduit E	2089.33

Inlet No.	3A
Type	Catch Basin 6" Beehive
Sta.	9706+57.59 R 2 - 65.96' Lt. (PR85)
Grate Type	Beehive
Grate Elev.	2090.87
Base Elev.	2086.39
Invert Elev.	2086.58
H' Dist.	3.90

Manhole No.	3 - 48In.
Type	Manhole
Sta.	9706+58.82 R 2 - 6' Rt. (PR85)
Casting Type	Solid Cover
Top Elev.	2094.28
Base Elev.	2085.18
Invert Elev.	2085.43
Riser	7.60

24 In. Conduit S	2085.43
15 In. Conduit W	2086.29
24 In. Conduit N	2085.43

Inlet No.	4A
Type	Inlet - Type 2 - Double
Sta.	9704+82.77 R 2 - 52' Lt. (PR85)
Grate Type	D
Grate Elev.	2090.65
Base Elev.	2086.17
Invert Elev.	2086.36
H' Dist.	4.15

Inlet No.	4B
Type	Inlet - Type 2 - Double
Sta.	9704+32.77 R 2 - 52' Lt. (PR85)
Grate Type	D
Grate Elev.	2090.5
Base Elev.	2085.87
Invert Elev.	2086.06
H' Dist.	4.30

15 In. Conduit E	2086.06
15 In. Conduit N	2086.16

Inlet No.	4C
Type	Inlet - Type 2 - Double
Sta.	9704+84.98 R 2 - 47.6' Rt. (PR85)
Grate Type	D
Grate Elev.	2086.54
Base Elev.	2082.46
Invert Elev.	2082.65
H' Dist.	3.75

Manhole No.	4D - 48In.
Type	Manhole
Sta.	9704+32.55 R 2 - 6' Rt. (PR85)
Casting Type	Solid Cover
Top Elev.	2091.45
Base Elev.	2084.27
Invert Elev.	2084.52
Riser	5.68

24 In. Conduit E	2084.52
15 In. Conduit W	2085.83
15 In. Conduit N	2082.44
24 In. Conduit N	2084.52

Inlet No.	4
Type	Inlet - Type 2 - Double
Sta.	9704+32.55 R 2 - 50.16' Rt. (PR85)
Grate Type	D
Grate Elev.	2089.95
Base Elev.	2081.44
Invert Elev.	2081.69
H' Dist.	8.18

24 In. Conduit S	2081.69
24 In. Conduit W	2084.35

Manhole No.	5 - 48In.
Type	Manhole
Sta.	9703+33.59 R 2 - 85.44' Rt. (PR85)
Casting Type	Solid Cover
Top Elev.	2087.83
Base Elev.	2081.02
Invert Elev.	2081.27
Riser	5.31

24 In. Conduit E	2081.27
24 In. Conduit N	2081.27

Inlet No.	6A
Type	Inlet - Type 2
Sta.	788+45.37 - 17' Rt. (PR2WB)
Grate Type	V
Grate Elev.	2087.27
Base Elev.	2082.79
Invert Elev.	2082.98
H' Dist.	4.15

18 In. Conduit S

Inlet No.	6
Type	Inlet - Type 2
Sta.	788+93.64 - 17' Rt. (PR2WB)
Grate Type	V
Grate Elev.	2086.21
Base Elev.	2081.88
Invert Elev.	2082.07
H' Dist.	4.00

15 In. Conduit N	2082.07
15 In. Conduit W	2082.07

Note: Station and offset is to the center of the structure.

This document was originally issued and sealed by Erin L. Hunker, Registration Number PE- 6657, on 9/11/13 and the original document is stored at the North Dakota Department of Transportation

Drainage Summary

US 85 Intersection Improvements
US 85
Proposed
9670+00 to 9713+00

STATE	PROJECT NO.	SECTION NO.	SHEET NO.
ND	SOIA-7-085(092)183	50	3

INLET AND MANHOLE SUMMARY

Inlet No.	7
Type	Inlet - Special, Type 2 - 48IN
Sta.	788+90.06 - 28' Lt. (PR2WB)
Grate Type	V
Grate Elev.	2086.54
Base Elev.	2080.89
Invert Elev.	2081.14
H' Dist.	5.32

24 In. Conduit NE	2081.14
24 In. Conduit W	2081.14
15 In. Conduit S	2081.89

Inlet No.	9B
Type	Inlet Special, Catch Basin 9IN Beehive - 48IN
Sta.	786+57.28 - 101.87' Lt. (PR2EB)
Grate Type	Beehive
Grate Elev.	2088.21
Base Elev.	2078.67
Invert Elev.	2078.96
H' Dist.	8.96

30 In. Conduit S	2078.96
30 In. Conduit N	2083.37

Inlet No.	9C
Type	Inlet - Special, Type 2 - 48IN
Sta.	786+60.38 - 58.8' Lt. (PR2EB)
Grate Type	V
Grate Elev.	2089.75
Base Elev.	2077.71
Invert Elev.	2078
H' Dist.	11.71

30 In. Conduit S	2078.00
30 In. Conduit N	2078.10

Inlet No.	9D
Type	Inlet - Special, Type 2 - 48IN
Sta.	786+61.59 - 16.1' Lt. (PR2EB)
Grate Type	V
Grate Elev.	2089.14
Base Elev.	2076.79
Invert Elev.	2077.08
H' Dist.	12.02

30 In. Conduit S	2077.08
30 In. Conduit N	2077.18

Inlet No.	10A
Type	Catch Basin 9" Beehive
Sta.	783+59.60 - 85' Lt. (PR2EB)
Grate Type	Beehive
Grate Elev.	2090.55
Base Elev.	2086.79
Invert Elev.	2086.98
H' Dist.	3.18

Inlet No.	10B
Type	Inlet - Type 2
Sta.	783+62.50 - 17' Lt. (PR2EB)
Grate Type	V
Grate Elev.	2093.3
Base Elev.	2085.91
Invert Elev.	2086.1
H' Dist.	7.06

15 In. Conduit S	2086.10
15 In. Conduit E	2087.84

Inlet No.	10C
Type	Inlet - Type 2
Sta.	784+33.62 - 17' Lt. (PR2EB)
Grate Type	V
Grate Elev.	2092.41
Base Elev.	2087.93
Invert Elev.	2088.12
H' Dist.	4.15

Inlet No.	11A
Type	Inlet - Type 2
Sta.	792+13.29 - 29.49' Rt. (PR2WB)
Grate Type	V
Grate Elev.	2078.32
Base Elev.	2073.72
Invert Elev.	2073.91
H' Dist.	4.27

Inlet No.	11B
Type	Inlet - Type 2
Sta.	792+13.41 - 17' Rt. (PR2WB)
Grate Type	V
Grate Elev.	2078.55
Base Elev.	2072.56
Invert Elev.	2072.75
H' Dist.	5.66

15 In. Conduit N	2072.75
15 In. Conduit S	2073.87

Note: Station and offset is to the center of structure.

This document was originally issued and sealed by Erin L. Hunker, Registration Number PE- 6657, on 9/26/13 and the original document is stored at the North Dakota Department of Transportation

Drainage Summary

US 85 Intersection Improvements
US 85
Proposed
9670+00 to 9713+00

STATE	PROJECT NO.	SECTION NO.	SHEET NO.
ND	SOIA-7-085(092)183	51	1

Begin Station/ Location	Begin Offset	End Station/ Location	End Offset	(A) Length (LF	Pipe Conduit Storm Drain Pay Size (IN)	Allowable Material	Required Diameter (IN)	Minimum Thickness (IN)	(B) End Sections Begin (EA)	End (EA)
1A		1		44	15	Reinforced Concrete Pipe - Class III	15			
						Polymeric Coated Steel (3/4" x 3/4" Rib @ 7-1/2")		0.064		
						Polymeric Coated Steel (3/4" x 1" Rib @ 11-1/2")		0.064		
1B		1		44	15	Reinforced Concrete Pipe - Class III	15			
						Polymeric Coated Steel (3/4" x 3/4" Rib @ 7-1/2")		0.064		
						Polymeric Coated Steel (3/4" x 1" Rib @ 11-1/2")		0.064		
1		2		363	24	Reinforced Concrete Pipe - Class III	24			
						Polymeric Coated Steel (3/4" x 3/4" Rib @ 7-1/2")		0.064		
						Polymeric Coated Steel (3/4" x 1" Rib @ 11-1/2")		0.064		
2A		2		58	15	Reinforced Concrete Pipe - Class III	15			
						Polymeric Coated Steel (3/4" x 3/4" Rib @ 7-1/2")		0.064		
						Polymeric Coated Steel (3/4" x 1" Rib @ 11-1/2")		0.064		
2B		2		38	15	Reinforced Concrete Pipe - Class III	15			
						Polymeric Coated Steel (3/4" x 3/4" Rib @ 7-1/2")		0.064		
						Polymeric Coated Steel (3/4" x 1" Rib @ 11-1/2")		0.064		
2		3		117	24	Reinforced Concrete Pipe - Class III	24			
						Polymeric Coated Steel (3/4" x 3/4" Rib @ 7-1/2")		0.064		
						Polymeric Coated Steel (3/4" x 1" Rib @ 11-1/2")		0.064		
3A		3		72	15	Reinforced Concrete Pipe - Class III	15			
						Polymeric Coated Steel (3/4" x 3/4" Rib @ 7-1/2")		0.064		
						Polymeric Coated Steel (3/4" x 1" Rib @ 11-1/2")		0.064		
3		4D		226	24	Reinforced Concrete Pipe - Class III	24			
						Polymeric Coated Steel (3/4" x 3/4" Rib @ 7-1/2")		0.064		
						Polymeric Coated Steel (3/4" x 1" Rib @ 11-1/2")		0.064		
4A		4B		50	15	Reinforced Concrete Pipe - Class III	15			
						Polymeric Coated Steel (3/4" x 3/4" Rib @ 7-1/2")		0.064		
						Polymeric Coated Steel (3/4" x 1" Rib @ 11-1/2")		0.064		
4B		4D		58	15	Reinforced Concrete Pipe - Class III	15			
						Polymeric Coated Steel (3/4" x 3/4" Rib @ 7-1/2")		0.064		
						Polymeric Coated Steel (3/4" x 1" Rib @ 11-1/2")		0.064		
4C		4		52	15	Reinforced Concrete Pipe - Class III	15			
						Polymeric Coated Steel (3/4" x 3/4" Rib @ 7-1/2")		0.064		
						Polymeric Coated Steel (3/4" x 1" Rib @ 11-1/2")		0.064		
4D		4		44	24	Reinforced Concrete Pipe - Class III	24			
						Polymeric Coated Steel (3/4" x 3/4" Rib @ 7-1/2")		0.064		
						Polymeric Coated Steel (3/4" x 1" Rib @ 11-1/2")		0.064		
4		5		105	24	Reinforced Concrete Pipe - Class III	24			
						Polymeric Coated Steel (3/4" x 3/4" Rib @ 7-1/2")		0.064		
						Polymeric Coated Steel (3/4" x 1" Rib @ 11-1/2")		0.064		
5		7		32	24	Reinforced Concrete Pipe - Class III	24			
						Polymeric Coated Steel (3/4" x 3/4" Rib @ 7-1/2")		0.064		
						Polymeric Coated Steel (3/4" x 1" Rib @ 11-1/2")		0.064		
6A		6		48	15	Reinforced Concrete Pipe - Class III	15			
						Polymeric Coated Steel (3/4" x 3/4" Rib @ 7-1/2")		0.064		
						Polymeric Coated Steel (3/4" x 1" Rib @ 11-1/2")		0.064		
6		7		47	15	Reinforced Concrete Pipe - Class III	15			
						Polymeric Coated Steel (3/4" x 3/4" Rib @ 7-1/2")		0.064		
						Polymeric Coated Steel (3/4" x 1" Rib @ 11-1/2")		0.064		
7		8		26	24	Reinforced Concrete Pipe - Class III	24			
						Polymeric Coated Steel (3/4" x 3/4" Rib @ 7-1/2")		0.064		Y
						Polymeric Coated Steel (3/4" x 1" Rib @ 11-1/2")		0.064		
9A		9B		68	30	Reinforced Concrete Pipe - Class III	30			
						Polymeric Coated Steel (3/4" x 3/4" Rib @ 7-1/2")		0.064	Y	
						Polymeric Coated Steel (3/4" x 1" Rib @ 11-1/2")		0.064		
9B		9C		41	30	Reinforced Concrete Pipe - Class III	30			
						Polymeric Coated Steel (3/4" x 3/4" Rib @ 7-1/2")		0.064		
						Polymeric Coated Steel (3/4" x 1" Rib @ 11-1/2")		0.064		
9C		9D		43	30	Reinforced Concrete Pipe - Class III	30			
						Polymeric Coated Steel (3/4" x 3/4" Rib @ 7-1/2")		0.064		
						Polymeric Coated Steel (3/4" x 1" Rib @ 11-1/2")		0.064		

(A) Pipe length is to the center of the structure.
(B) Not paid for separately, to be included in the bid price for Pipe Conduit.

This document was originally issued and sealed by Erin L. Hunker, Registration Number PE- 6657, on 9/26/13 and the original document is stored at the North Dakota Department of Transportation

Allowable Pipe List - Storm Drain

US 85 Intersection Improvements
US 85
Proposed
9670+00 to 9713+00

STATE	PROJECT NO.	SECTION NO.	SHEET NO.
ND	SOIA-7-085(092)183	51	2

Begin Station/ Location	Begin Offset	End Station/ Location	End Offset	(A) Length (LF	Pipe Conduit Storm Drain Pay Size (IN)	Allowable Material	Required Diameter (IN)	Minimum Thickness (IN)	(B) End Sections Begin (EA)	(B) End Sections End (EA)
9D		9		100	30	Reinforced Concrete Pipe - Class III	30			Y
						Polymeric Coated Steel (3/4" x 3/4" Rib @ 7-1/2")		0.064		
						Polymeric Coated Steel (3/4" x 1" Rib @ 11-1/2")		0.064		
10A		10B		68	15	Reinforced Concrete Pipe - Class III	15			
						Polymeric Coated Steel (3/4" x 3/4" Rib @ 7-1/2")		0.064		
						Polymeric Coated Steel (3/4" x 1" Rib @ 11-1/2")		0.064		
10B		10		74	15	Reinforced Concrete Pipe - Class III	15			Y
						Polymeric Coated Steel (3/4" x 3/4" Rib @ 7-1/2")		0.064		
						Polymeric Coated Steel (3/4" x 1" Rib @ 11-1/2")		0.064		
10C		10B		71	15	Reinforced Concrete Pipe - Class III	15			
						Polymeric Coated Steel (3/4" x 3/4" Rib @ 7-1/2")		0.064		
						Polymeric Coated Steel (3/4" x 1" Rib @ 11-1/2")		0.064		
11A		11B		12	15	Reinforced Concrete Pipe - Class III	15			Y
						Polymeric Coated Steel (3/4" x 3/4" Rib @ 7-1/2")		0.064		
						Polymeric Coated Steel (3/4" x 1" Rib @ 11-1/2")		0.064		
11B		11		70	15	Reinforced Concrete Pipe - Class III	15			Y
						Polymeric Coated Steel (3/4" x 3/4" Rib @ 7-1/2")		0.064		
						Polymeric Coated Steel (3/4" x 1" Rib @ 11-1/2")		0.064		

(A) Pipe length is to the center of the structure.
(B) Not paid for separately, to be included in the bid price for Pipe Conduit.

This document was originally issued and sealed by Erin L. Hunker, Registration Number PE- 6657, on 9/11/13 and the original document is stored at the North Dakota Department of Transportation

Allowable Pipe List - Storm Drain

US 85 Intersection Improvements
US 85
Proposed
9670+00 to 9713+00

Alignment	Begin Station/ Location	Begin Offset	End Station/ Location	End Offset	Proposed Length (LF)	Pipe Size (IN)	Allowable Material Mainline Culverts	Required Diameter (IN)	Minimum Thickness (IN)	End Sections Begin (EA)	End Sections End (EA)	Reinforcement Fabric Type R1 (SY)	Applicable Backfill Detail
US 2 WB	776+76	34' LT	776+76	38' LT	4 (A)	24	Reinforced Concrete Pipe - Class III (barrel length 4 = LF)	24	N/A	Y (D)		21	D-714-28
US 2 EB	776+79	42' LT	776+79	69' LT	27 (A) (B)	24	Reinforced Concrete Pipe - Class III (barrel length 27 = LF)	24	N/A			71	D-714-28
US 2 WB	795+78	144' LT	795+78	77' LT	65	22 x 13	Reinforced Concrete Pipe - Class III (barrel length 58 = LF)	22 x 13	N/A	Y	Y	239	D-714-26
US 2 WB	795+82	142' LT	795+82	77' LT	67	22 x 13	Reinforced Concrete Pipe - Class III (barrel length 60 = LF)	22 x 13	N/A	Y	Y	248	D-714-26
US 2 EB	797+76	27' LT	797+76	31' LT	4 (A)	18	Reinforced Concrete Pipe - Class III (barrel length 4 = LF)	18	N/A	Y (C)		27	D-714-28
US 2 EB	797+76	35' RT	797+76	52' RT	16 (A)	18	Reinforced Concrete Pipe - Class III (barrel length 16 = LF)	18	N/A		Y (D)	48	D-714-28

(A) Extension of existing pipe.
(B) Length includes slotted section for reinforced concrete pipe and 7.5 degree pipe bend, and will be paid for as Pipe Concrete Reinforced 24IN - CL III. Field verify locations of existing pipes.
(C) Traversable End Section, to be paid for seperately.
(D) End Sections to be relaid when extending pipe, to be paid for as Remove and Relay End Section.

Alignment	Begin Station/ Location	Begin Offset	End Station/ Location	End Offset	Proposed Length (LF)	Pipe Size (IN)	Allowable Material Approach Culverts	Required Diameter (IN)	Minimum Thickness (IN)	End Sections LT (EA)	End Sections RT (EA)	Applicable Backfill Detail
US 2 WB	781+74	158' LT	782+07	156' LT	34	18	Reinforced Concrete Pipe - Class III (barrel length 26 = LF)	18	N/A	Y	Y	D-203-8
							Zinc Coated Corrugated Steel	18	0.064			
							Aluminum Coated Corrugated Steel (Type 2)	18	0.064			
							Aluminum Alloy Pipe	18	0.060			
							High-Density Polyethylene (HDPE)	18	N/A			
US 2 WB	786+40	154' LT	786+80	154' LT	40	18	Reinforced Concrete Pipe - Class III (barrel length 32 = LF)	18	N/A	Y	Y	D-203-8
							Zinc Coated Corrugated Steel	18	0.064			
							Aluminum Coated Corrugated Steel (Type 2)	18	0.064			
							Polymeric Coated Steel (over zinc or aluminum coated steel)	18	0.064			
							Aluminum Alloy Pipe	18	0.060			
							High-Density Polyethylene (HDPE)	18	N/A			

This document was originally issued and sealed by Erin L. Hunker, Registration Number PE- 6657, on 9/26/13 and the original document is stored at the North Dakota Department of Transportation

Allowable Pipe List - Culverts

US 85 Intersection Improvements
US 85
Proposed
9670+00 to 9713+00

STATE	PROJECT NO.	SECTION NO.	SHEET NO.
ND	SOIA-7-085(092)183	55	1

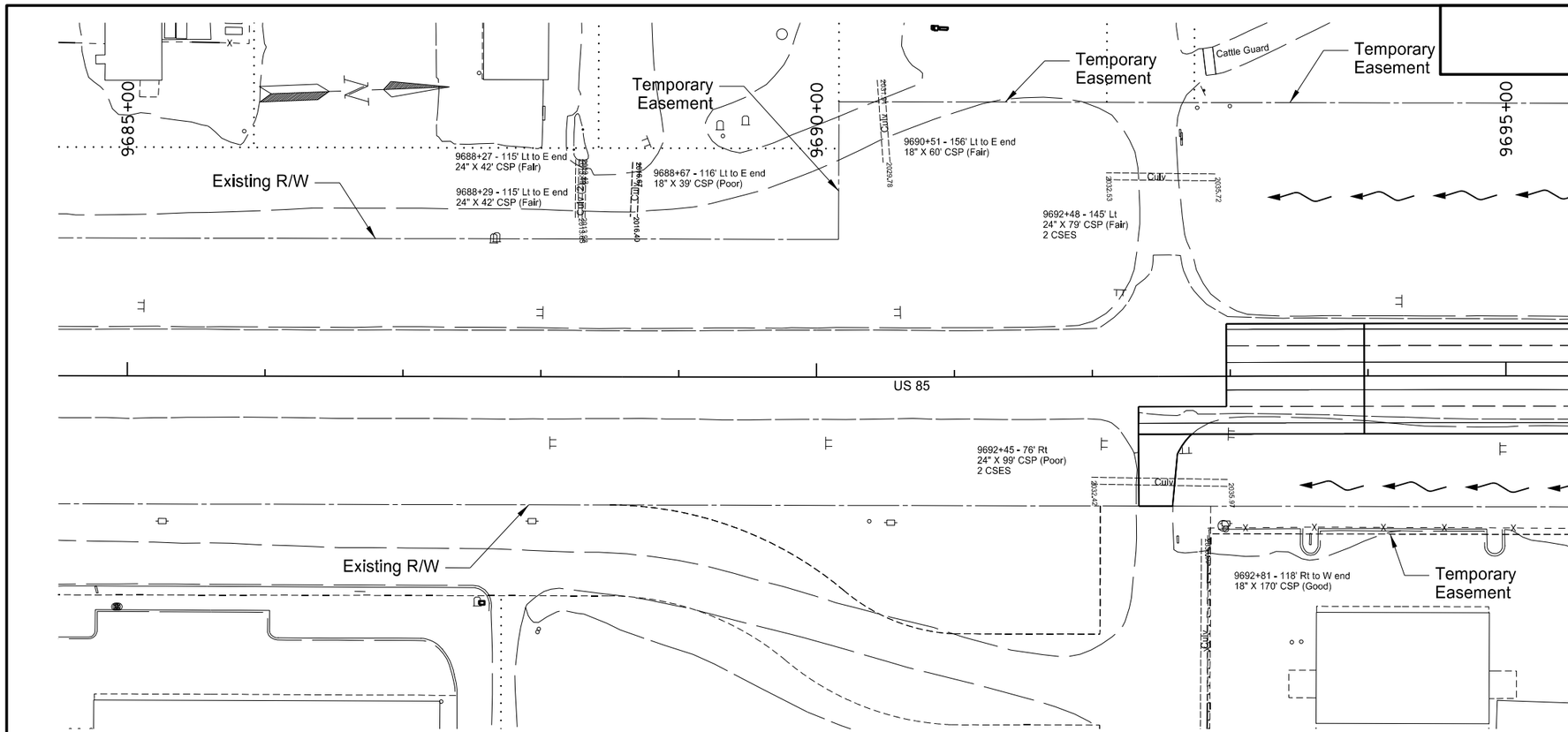

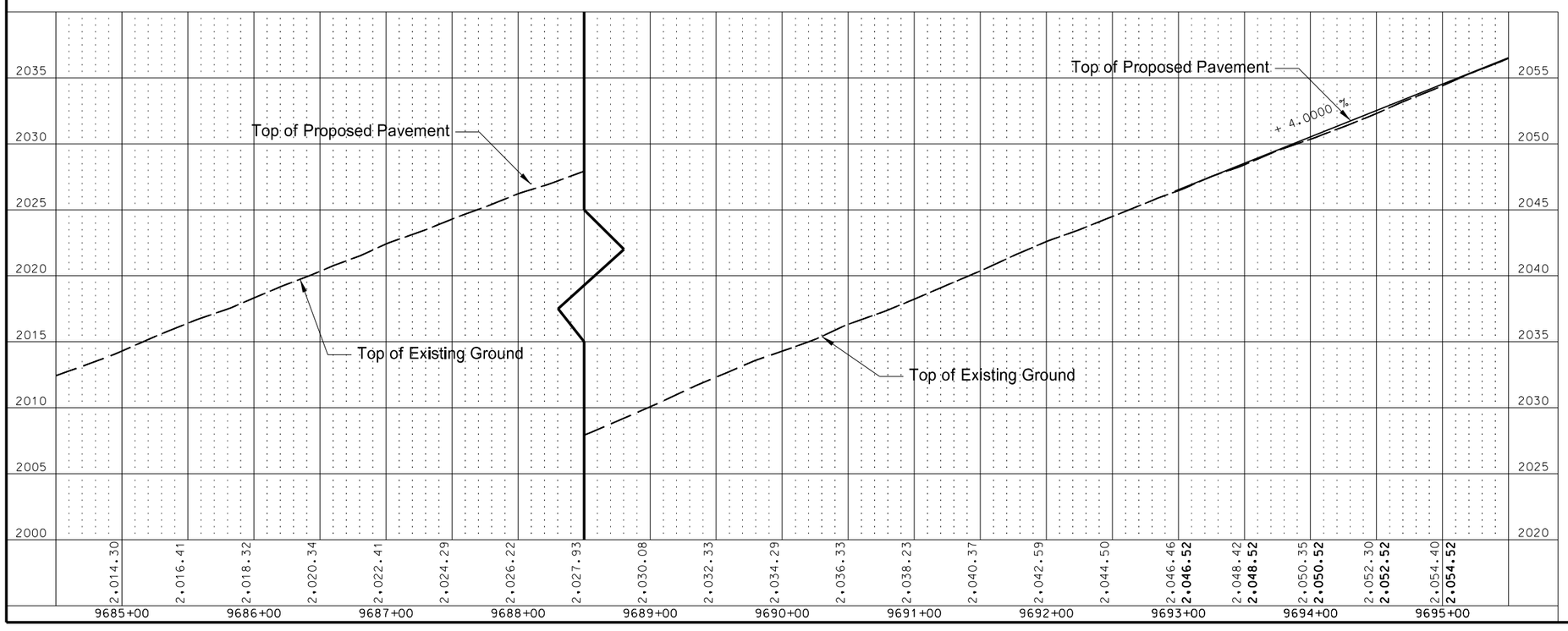

See Section 30 Sheet 10 for Profile Grade Line Information

This document was originally issued and sealed by Erin L. Hunker, Registration Number PE- 6657, on 9/26/13 and the original document is stored at the North Dakota Department of Transportation

Storm Sewer

US 85 Intersection Improvements

US 85
9685+00 to 9695+00

STATE	PROJECT NO.	SECTION NO.	SHEET NO.
ND	SOIA-7-085(092)183	55	2

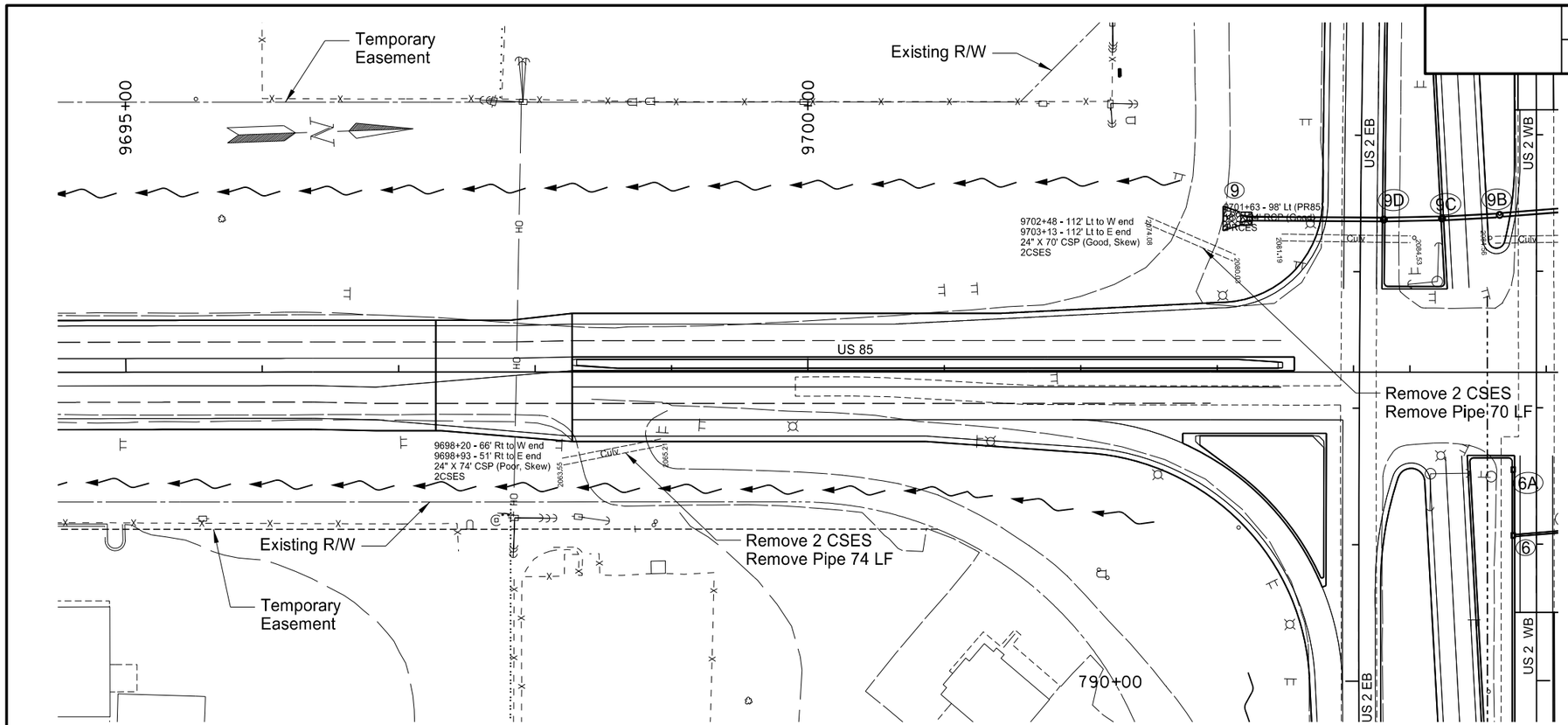

202	0169	Removal of End Section - All Types & Sizes		
		9698+20 - 66' RT	1	EA
		9698+93 - 51 RT	1	EA
		9702+48 - 112' LT	1	EA
		9703+13 - 112' LT	1	EA
202	0174	Removal of Pipe - All Types & Sizes		
		9698+20 - 66' RT to 9698+93 - 51 RT	74	LF
		9702+48 - 112' LT to 9703+13 - 112' LT	70	LF

Note: Stations & Offsets from US 85 Chain: PR85

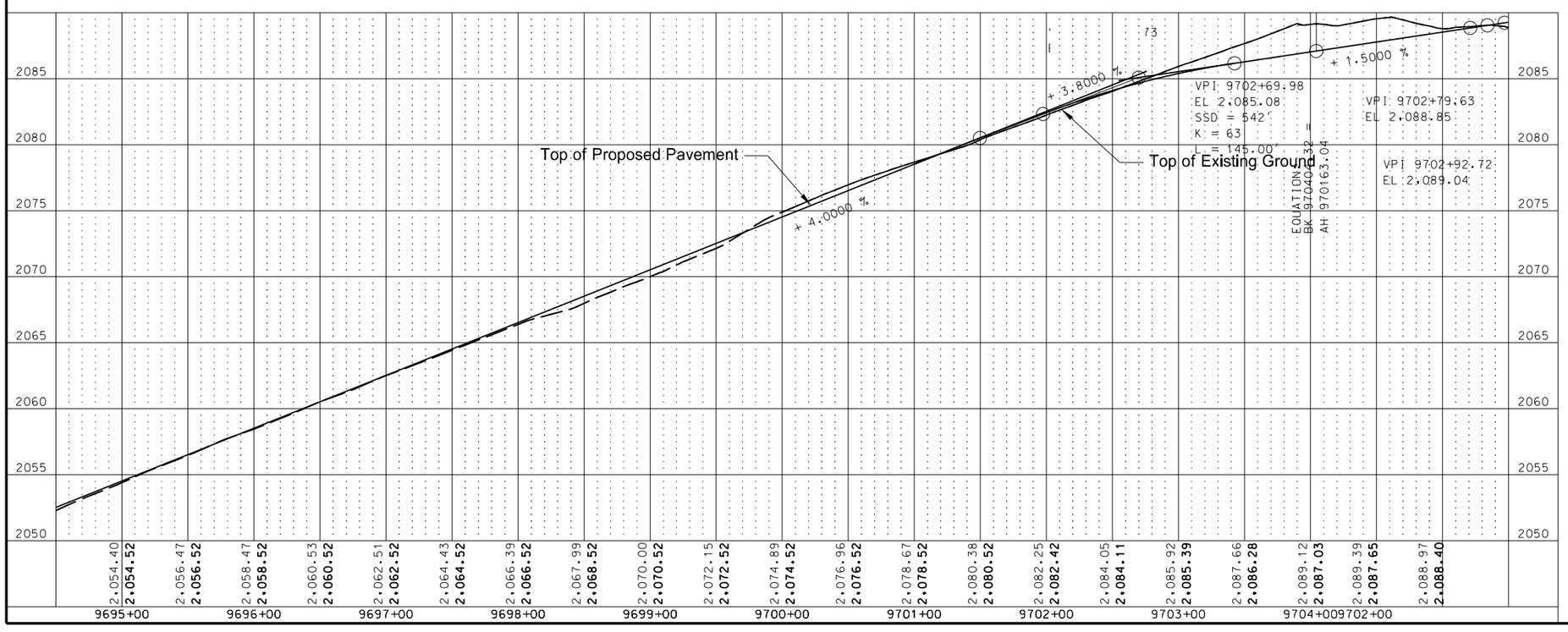

See Section 30 Sheet 10 for Profile Grade Line Information

This document was originally issued and sealed by Erin L. Hunker, Registration Number PE- 6657, on 9/26/13 and the original document is stored at the North Dakota Department of Transportation

Storm Sewer

US 85 Intersection Improvements

US 85
9695+00 to 9704+04.32 BK

STATE	PROJECT NO.	SECTION NO.	SHEET NO.
ND	SOIA-7-085(092)183	55	3

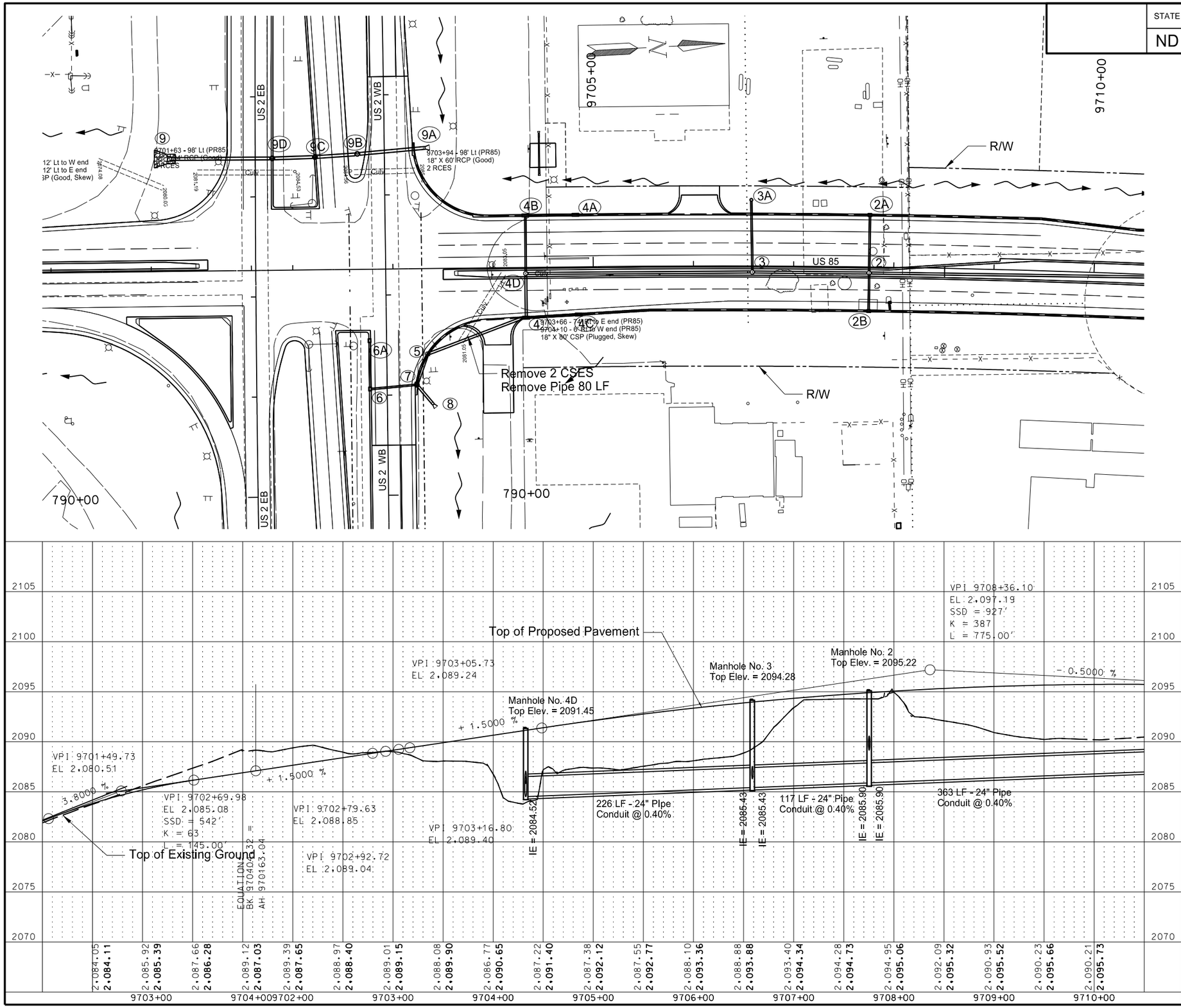

202	0169	Removal of End Section - All Types & Sizes		
		9703+66 - 74' RT	1	EA
		9704+10 - 6' RT	1	EA
202	0174	Removal of Pipe - All Types & Sizes		
		9703+66 - 74' RT to 9704+10 - 6' RT	80	LF
714	4097	Pipe Conduit 15IN - Storm Drain		
		2A to 2	58	LF
		2B to 2	38	LF
		3A to 3	72	LF
		4A to 4B	50	LF
		4B to 4D	58	LF
		4C to 4	52	LF
714	4105	Pipe Conduit 24IN - Storm Drain		
		9710+00 to 2	225	LF
		2 to 3	117	LF
		3 to 4D	226	LF
		4D to 4	44	LF
		4 to 5	105	LF
714	9696	Edgedrain Non Permeable Base		
		7 to 5	35	LF
		5 to 4	112	LF
		4 to 4C	53	LF
		4C to 2B	290	LF
		2B to 9710+00 RT	224	LF
		9703+22 LT to 4B	150	LF
		4B to 4A	50	LF
		4A to 2A	294	LF
		2A to 9710+00 LT	226	LF
722	0100	Manhole 48IN		
		2	1	EA
		3	1	EA
		4D	1	EA
722	1100	Manhole Riser - 48IN		
		2	8.07	LF
		3	7.60	LF
		4D	5.68	LF
722	3510	Inlet - Type 2		
		2A	1	EA
		2B	1	EA
722	3520	Inlet - Type 2 Double		
		4A	1	EA
		4B	1	EA
		4C	1	EA
		4	1	EA
722	4010	Inlet Catch Basin 6IN Beehive		
		3A	1	EA

Note: Stations & Offsets from US 85 Chain: PR85

See Section 30 Sheet 10 for Profile Grade Line Information

This document was originally issued and sealed by Erin L. Hunker, Registration Number PE- 6657, on 9/11/13 and the original document is stored at the North Dakota Department of Transportation

Storm Sewer

US 85 Intersection Improvements

US 85
9701+63.04 AH to 9710+00

STATE	PROJECT NO.	SECTION NO.	SHEET NO.
ND	SOIA-7-085(092)183	55	4

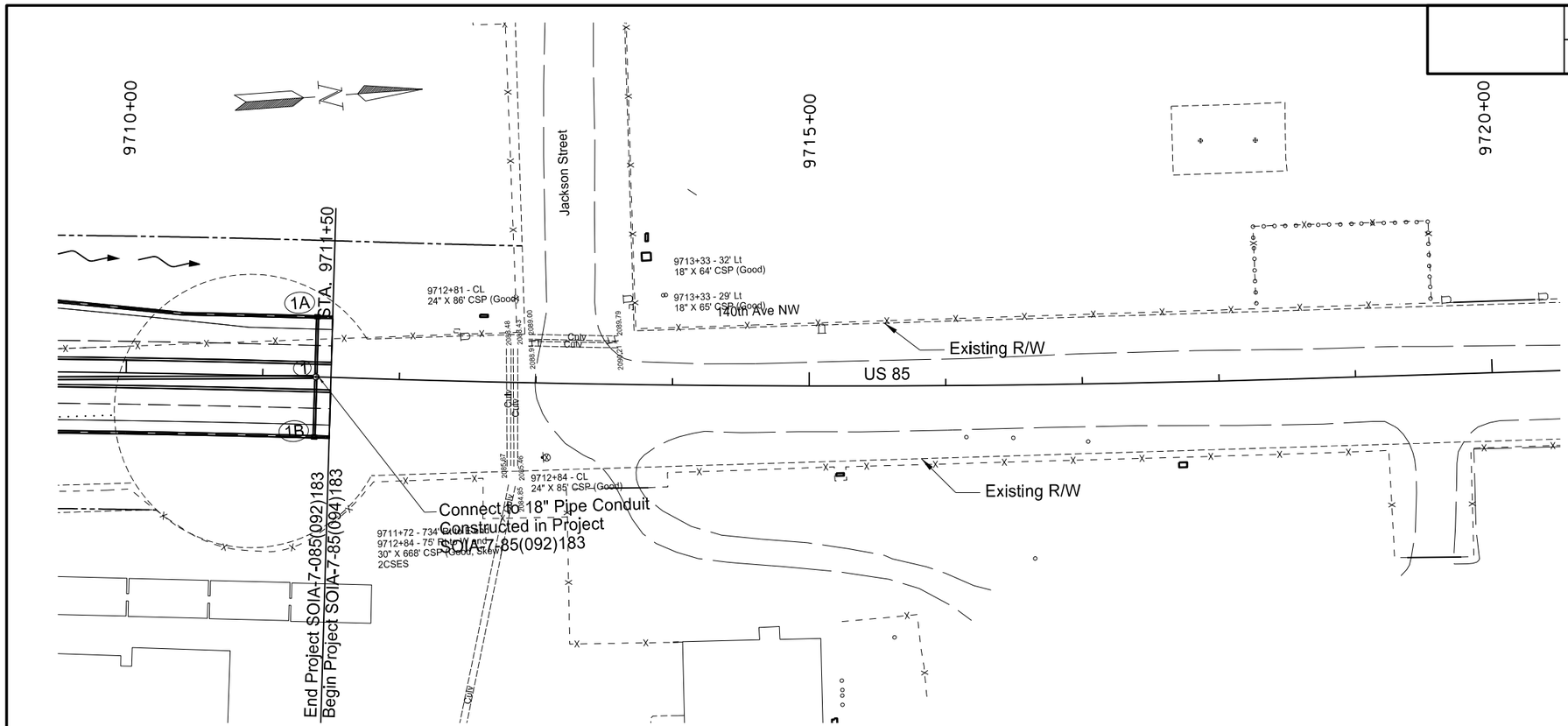

714	4097	Pipe Conduit 15IN-Storm Drain		
		1A to 1	44	LF
		1B to 1	44	LF
714	4105	Pipe Conduit 24IN - Storm Drain		
		1 to 9710+00	138	LF
714	9696	Edgedrain Non Permeable Base		
		9710+00 RT to 9711+50 RT	150	LF
		9710+00 LT to 9711+50 LT	151	LF
722	0100	Manhole 48IN		
		1	1	EA
722	1100	Manhole Riser - 48IN		
		1	7.35	LF
722	3510	Inlet - Type 2		
		1A	1	EA
		1B	1	EA

Note: Stations & Offsets from US 85 Chain: PR85

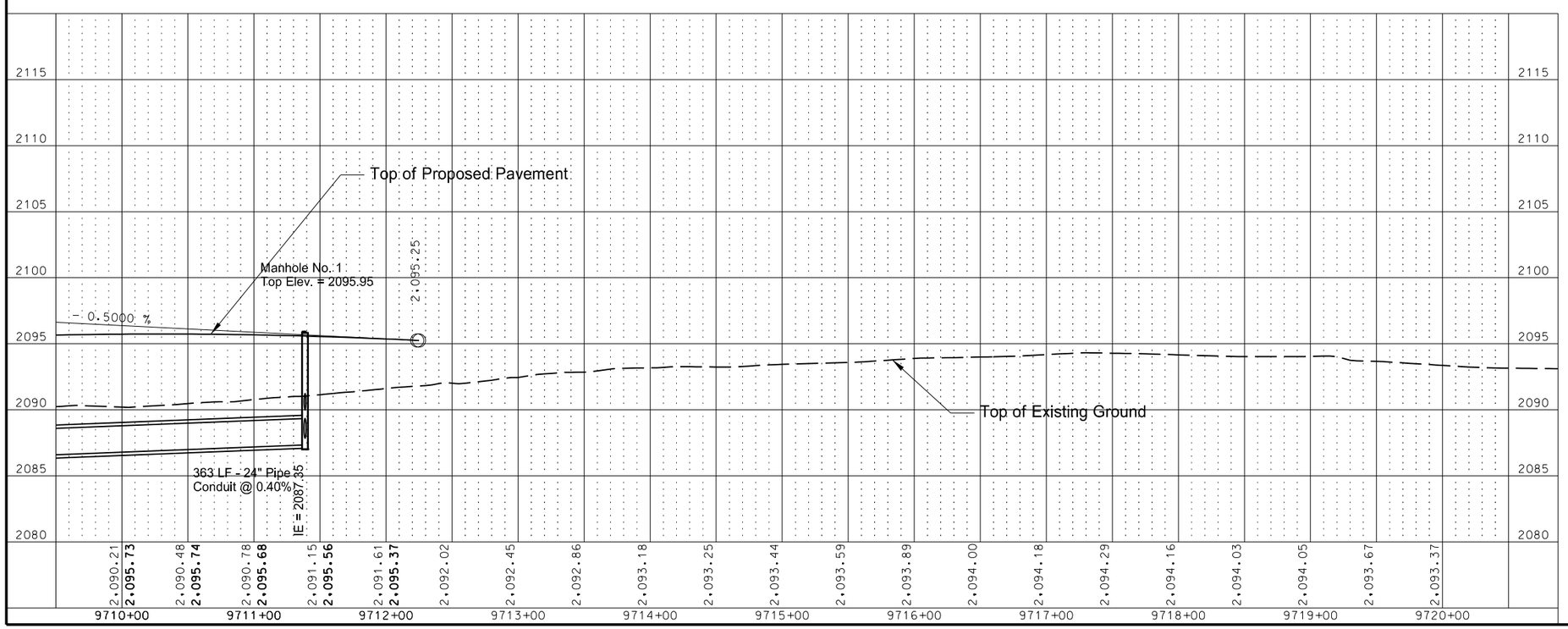

See Section 30 Sheet 10 for Profile Grade Line Information

This document was originally issued and sealed by Erin L. Hunker, Registration Number PE- 6657, on 9/11/13 and the original document is stored at the North Dakota Department of Transportation

Storm Sewer

US 85 Intersection Improvements

US 85
9710+00 to 9713+00

STATE	PROJECT NO.	SECTION NO.	SHEET NO.
ND	SOIA-7-085(092)183	55	5

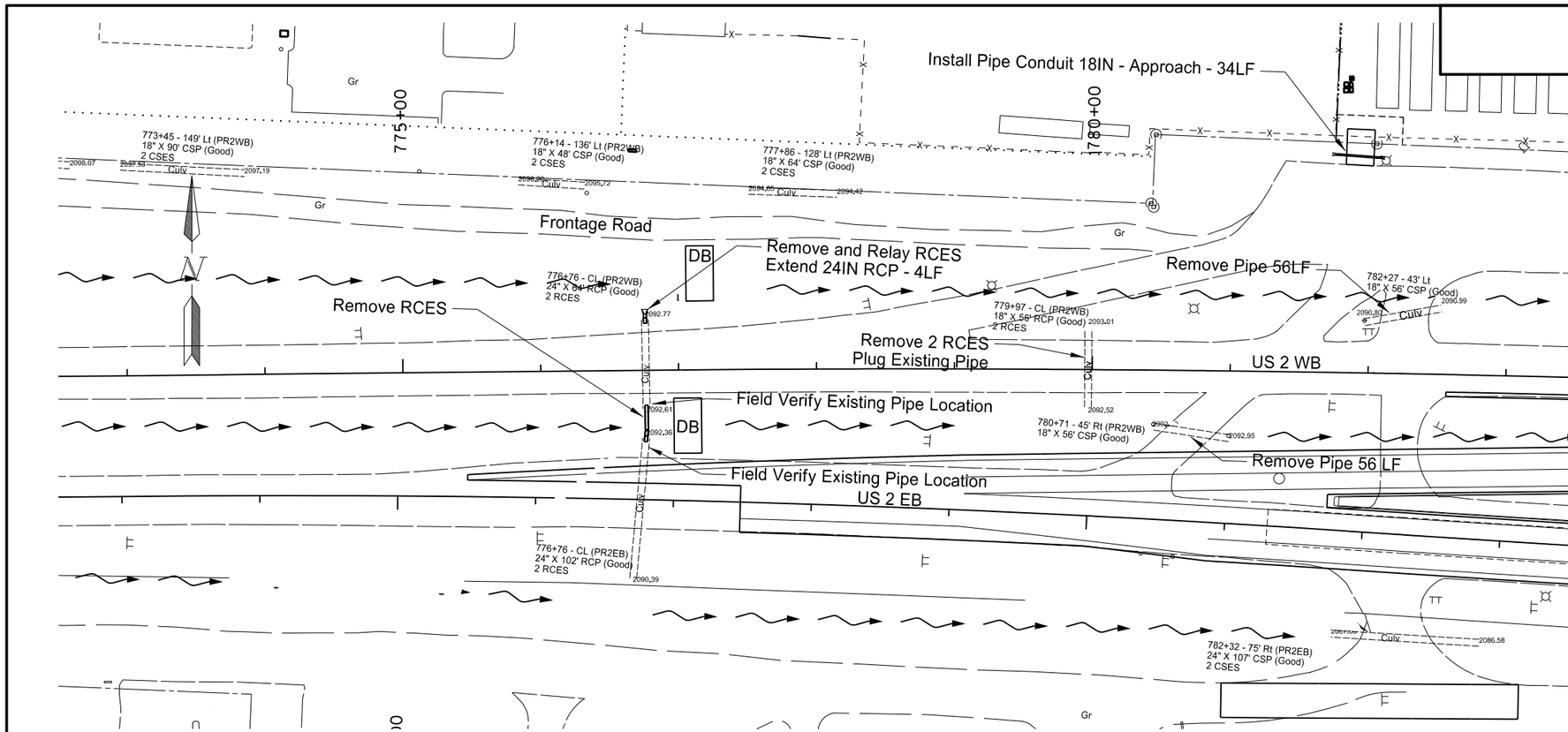

202	0169	Removal of End Section - All Types & Sizes		
		776+76 - 28' RT	1	EA
		779+98 - 33' LT	2	EA
202	0174	Removal of Pipe - All Types and Sizes		
		782+27 - 43' LT	56	LF
		780+71 - 45' RT	56	LF
714	0615	Pipe Concrete Reinforced 24IN - CL III		
		776+76 - LT	4	LF
714	4099	Pipe Conduit 18IN - Approach		
		781+74 - 158' LT to 782+07 - 156' LT	34	LF
714	4680	Plug Pipe - All Types and Sizes		
		779+97	1	EA
714	9660	Remove and Relay End Sec - All Types and Sizes		
		776+76 - LT	1	EA

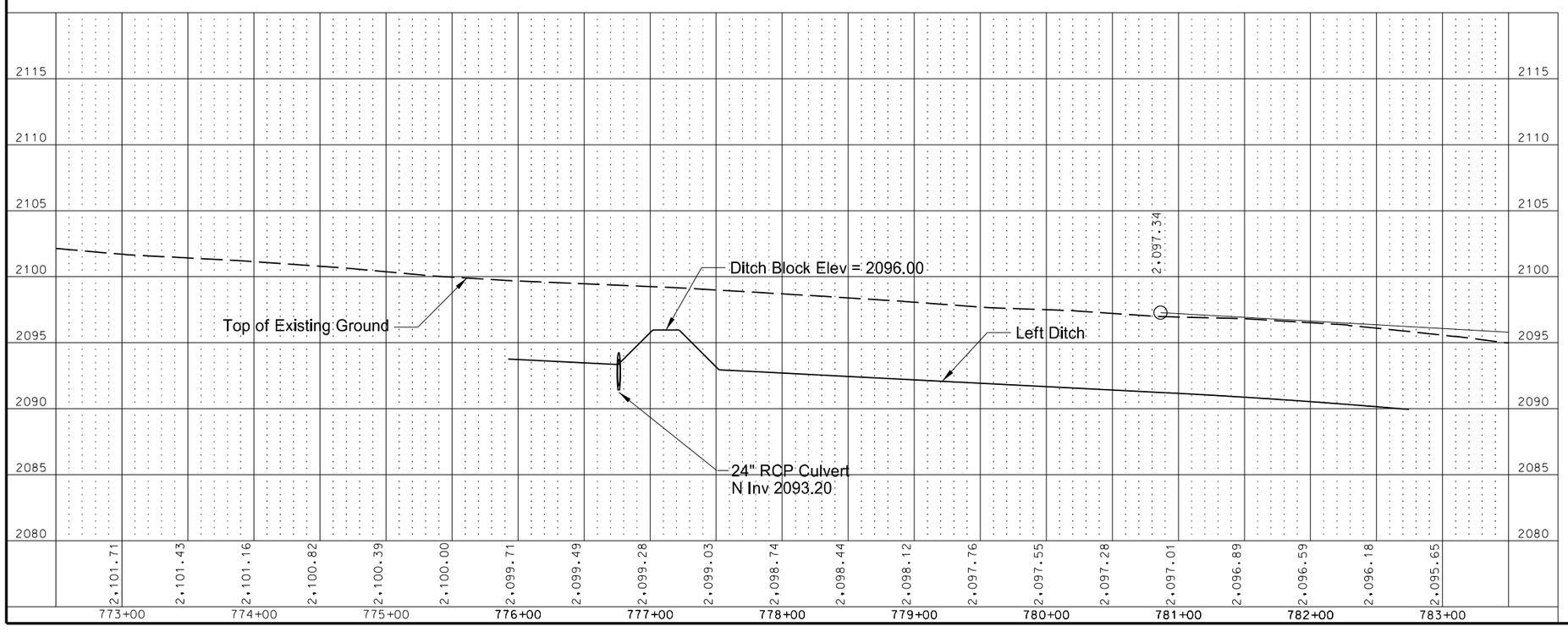

See Section 30 Sheet 10 for Profile Grade Line Information

This document was originally issued and sealed by Erin L. Hunker, Registration Number PE- 6657, on 9/11/13 and the original document is stored at the North Dakota Department of Transportation

Storm Sewer

US 85 Intersection Improvements

US 2 WB
782+56.75 to 783+00

STATE	PROJECT NO.	SECTION NO.	SHEET NO.
ND	SOIA-7-085(092)183	55	6

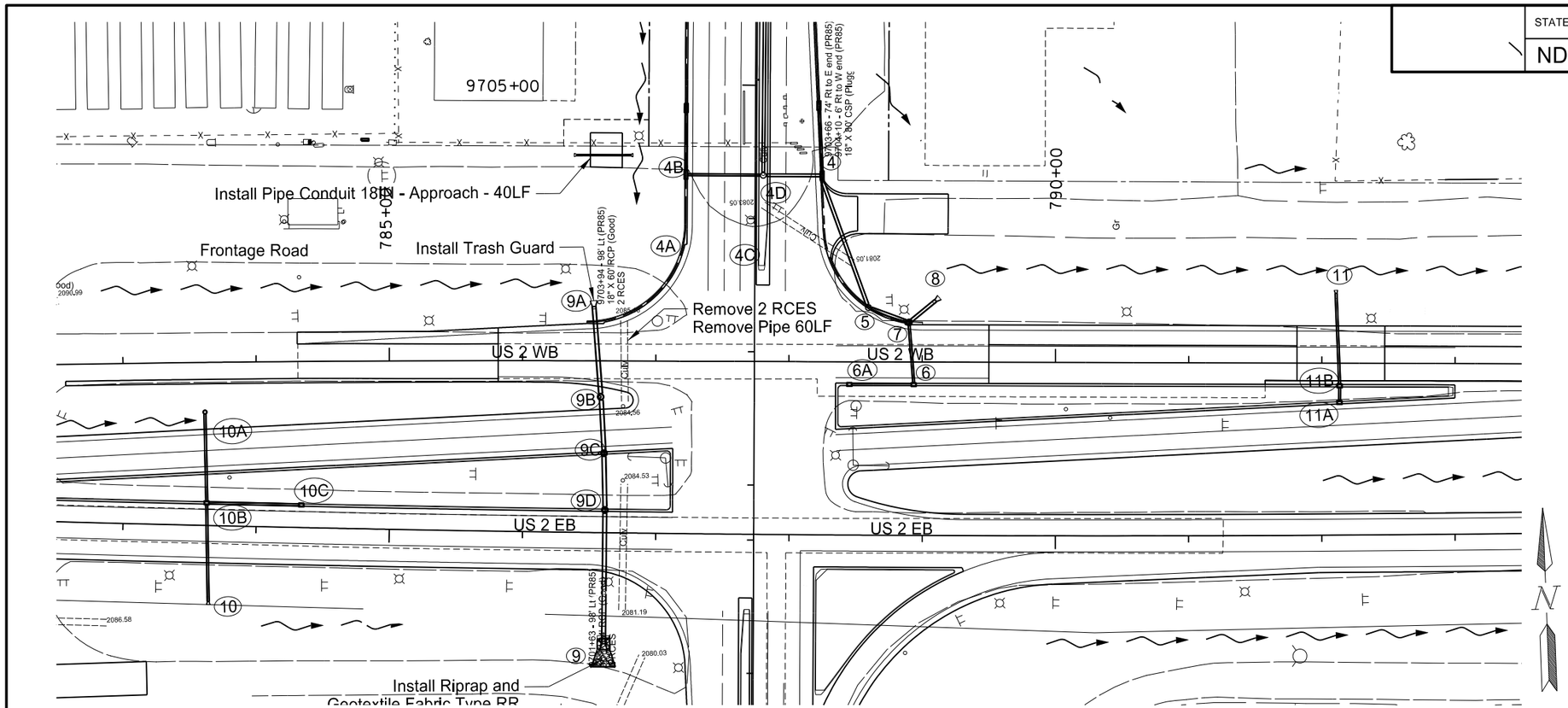

202	0169	Removal of End Section - All Types & Sizes		
		9703+94 - 98' LT	2	EA
202	0174	Removal of Pipe - All Types & Sizes		
		9703+94 - 98' LT	60	LF
714	4097	Pipe Conduit 15IN - Storm Drain		
		6A to 6	48	LF
		6 to 7	47	LF
		11A to 11B	12	LF
		11B to 11	70	LF
714	4099	Pipe Conduit 18IN - Approach		
		786+40 - 154' LT to 786+80 - 154' LT	40	LF
714	4105	Pipe Conduit 24IN - Storm Drain		
		5 to 7	32	LF
		7 to 8	26	LF
714	4112	Pipe Conduit 30IN - Storm Drain		
		9A to 9B	68	LF
722	0100	Manhole 48IN		
		5	1	EA
722	1100	Manhole Riser - 48IN		
		5	5.31	LF
		7	5.33	LF
722	3510	Inlet - Type 2		
		6A	1	EA
		6	1	EA
		11A	1	EA
		11B	1	EA
722	3701	Inlet Special - Type 2 48IN		
		7	1	EA
910	0480	Trash Rack		
		9A	1	EA

Note: 7XX+XX Stations & Offsets from US 2 WB Chain: PR2WB
9XXX+XX Stations & Offsets from US 85 Chain: PR85

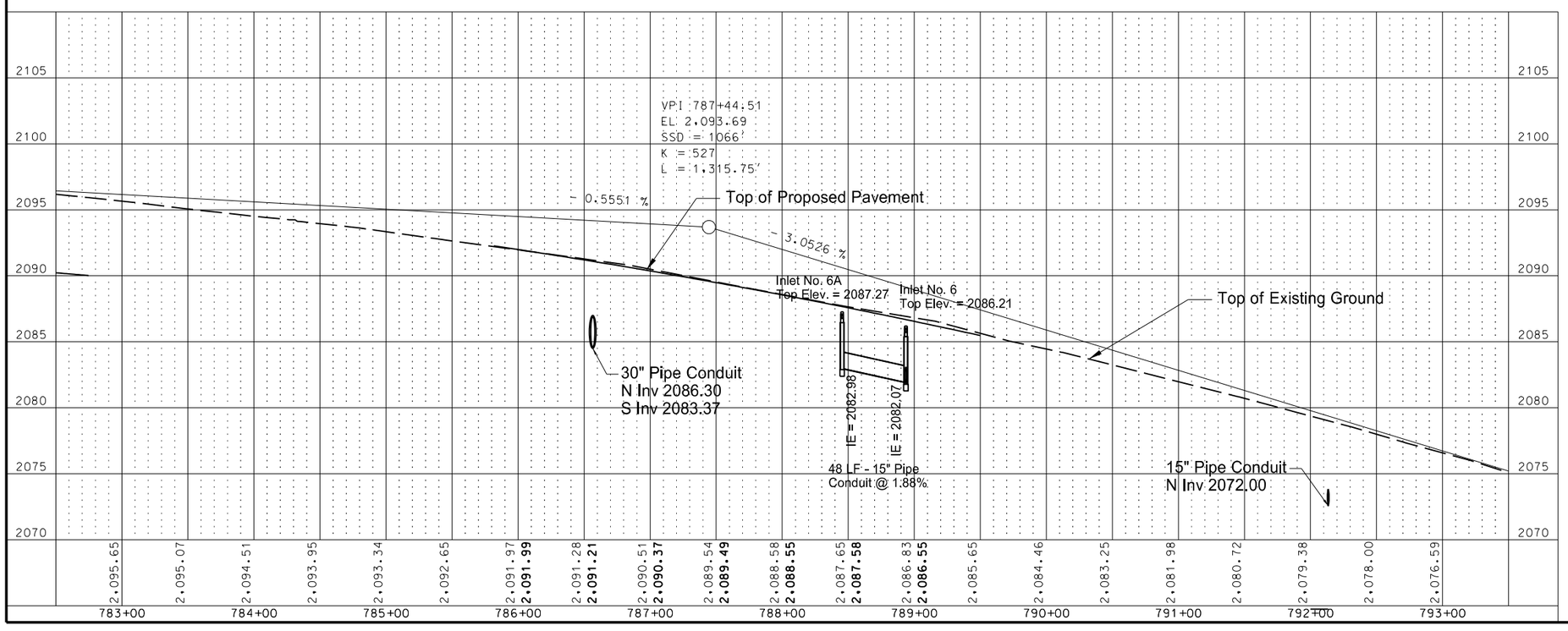

See Section 30 Sheet 10 for Profile Grade Line Information

This document was originally issued and sealed by Erin L. Hunker, Registration Number PE- 6657, on 9/26/13 and the original document is stored at the North Dakota Department of Transportation

Storm Sewer

US 85 Intersection Improvements

US 2 WB
783+00 to 793+00

STATE	PROJECT NO.	SECTION NO.	SHEET NO.
ND	SOIA-7-085(092)183	55	7

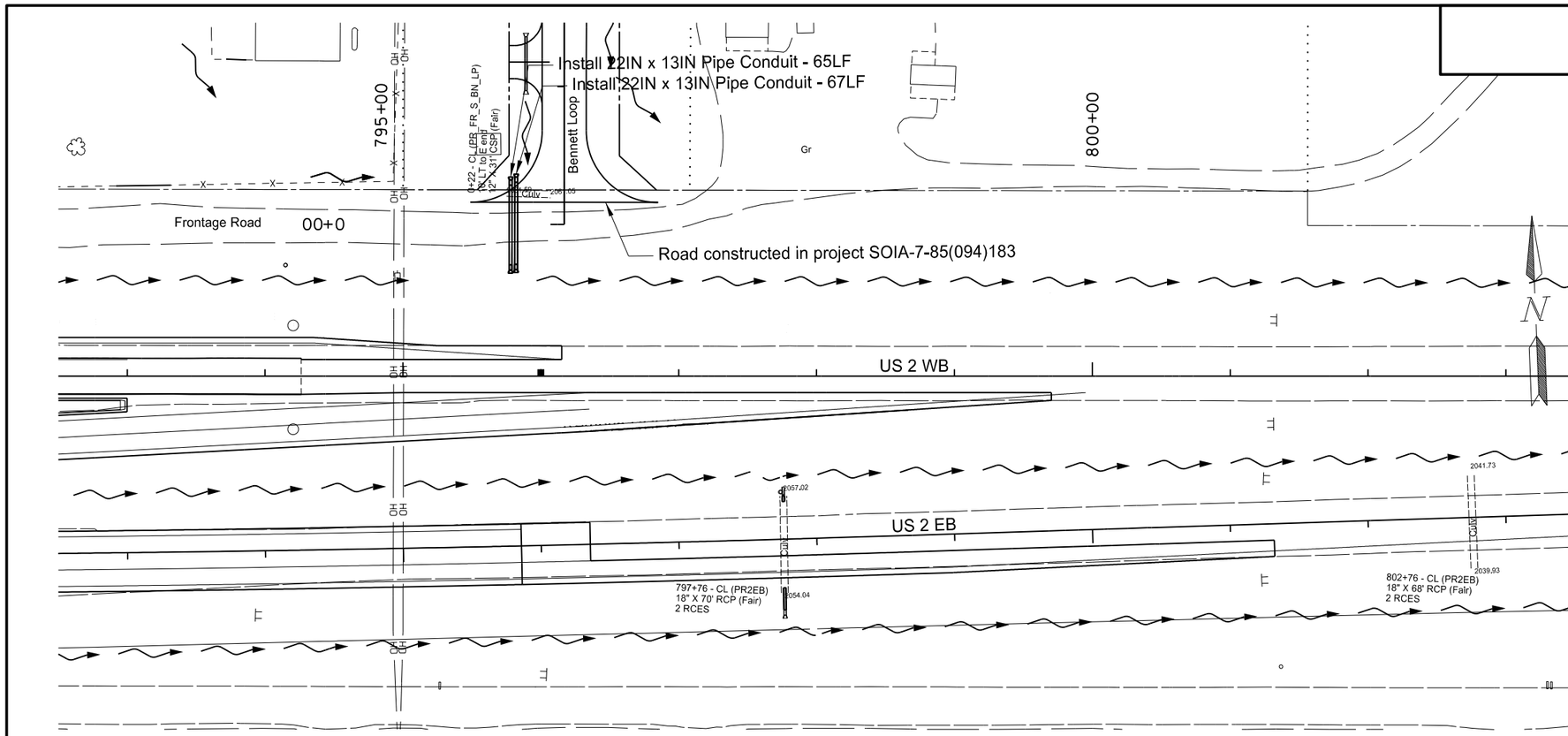

714 4216 Pipe Conduit Arch 22IN x 13IN

795+78 - 142' LT to 795+78 - 77' LT	65	LF
795+82 - 144' Lt to 795+82 - 77' LT	67	LF

Note: Stations & Offsets from US 2 WB Chain: PR2WB

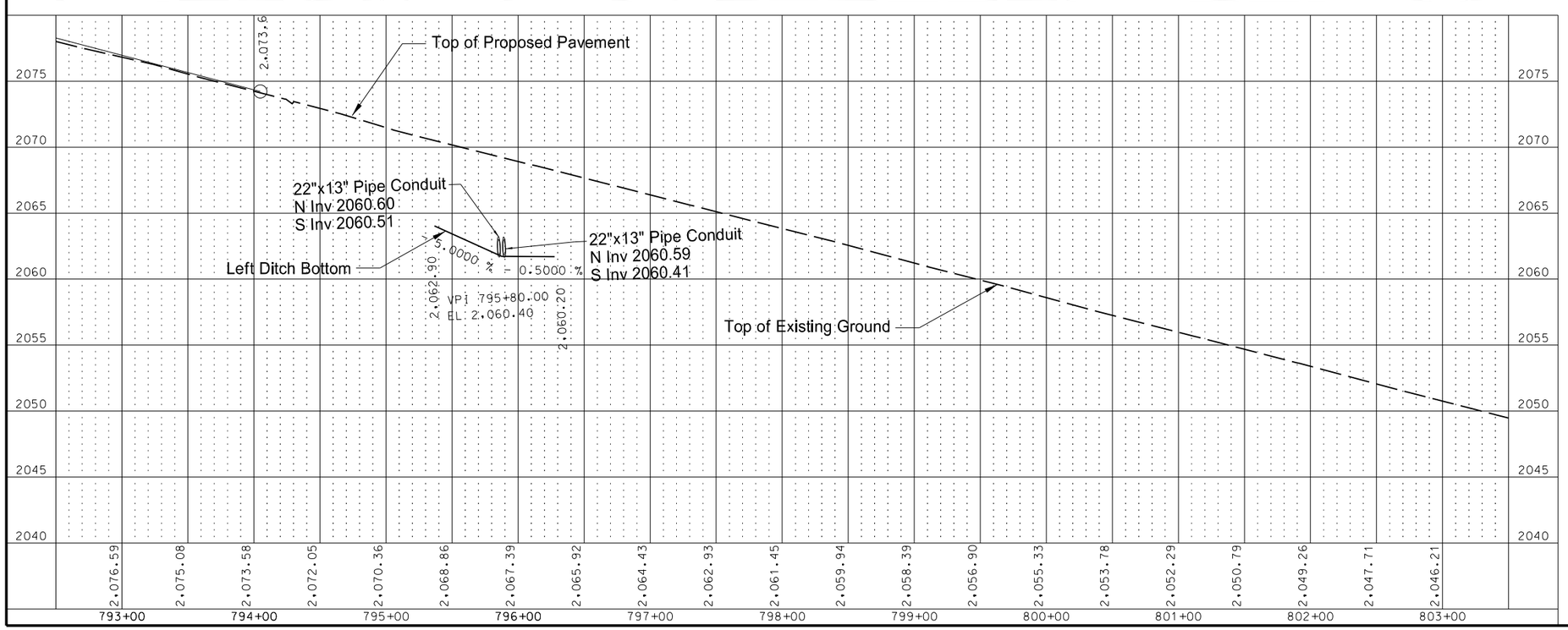

See Section 30 Sheet 10 for Profile Grade Line Information

This document was originally issued and sealed by Erin L. Hunker, Registration Number PE- 6657, on 9/26/13 and the original document is stored at the North Dakota Department of Transportation

Storm Sewer

US 85 Intersection Improvements

US 2 WB
793+00 to 797+66.17

STATE	PROJECT NO.	SECTION NO.	SHEET NO.
ND	SOIA-7-085(092)183	55	8

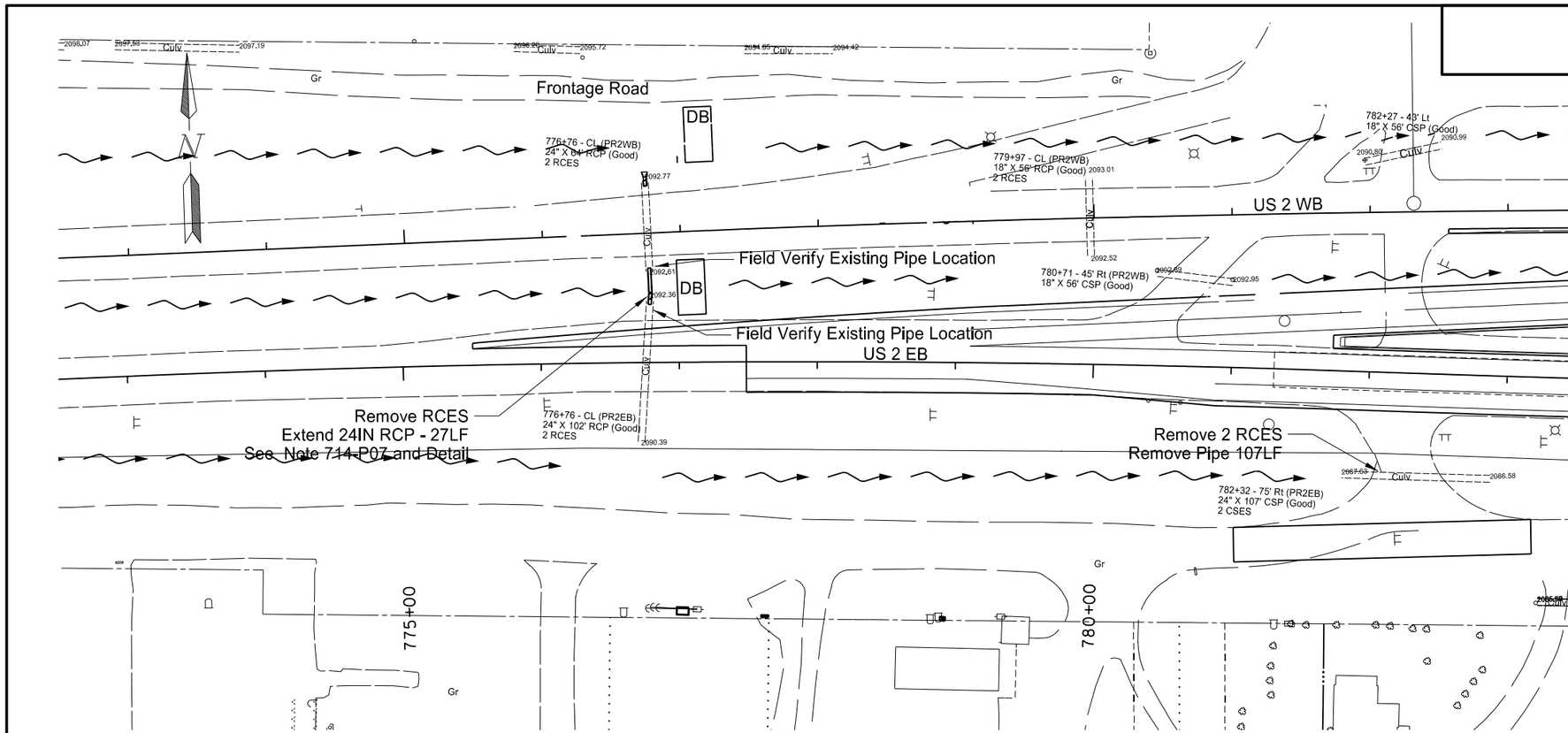

202	0169	Removal of End Section - All Types & Sizes		
		776+76 - 45' LT	1	EA
		782+32 - 75' RT	2	EA
202	0174	Removal of Pipe - All Types & Sizes		
		782+32 - 75' RT	107	LF
714	0615	Pipe Concrete Reinforced 24IN - CL III		
		776+76 - 45' LT (Includes Slotted Sec. & Bend)	27	LF

Note: Stations & Offsets from US 2 EB Chain: PR2EB

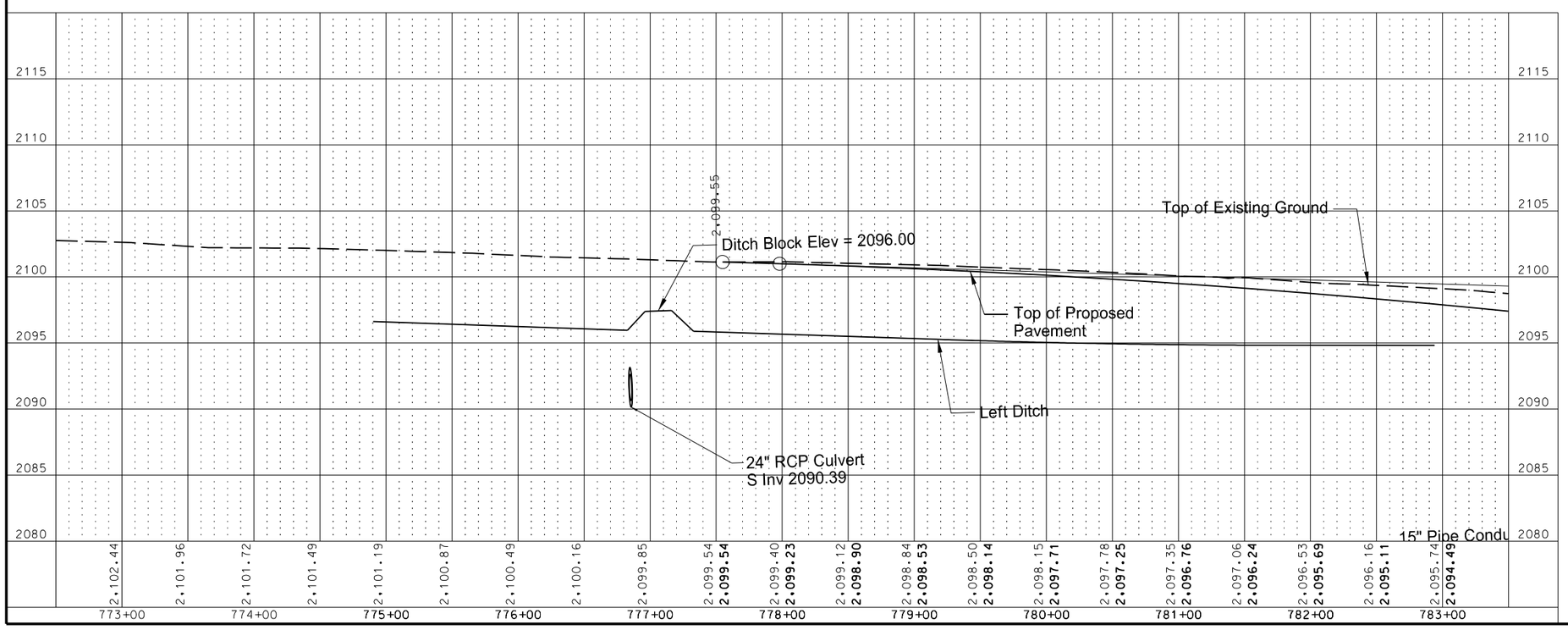

See Section 30 Sheet 10 for Profile Grade Line Information

This document was originally issued and sealed by Erin L. Hunker, Registration Number PE- 6657, on 9/11/13 and the original document is stored at the North Dakota Department of Transportation

Storm Sewer

US 85 Intersection Improvements

US 2 EB
777+48.61 to 783+00

STATE	PROJECT NO.	SECTION NO.	SHEET NO.
ND	SOIA-7-085(092)183	55	9

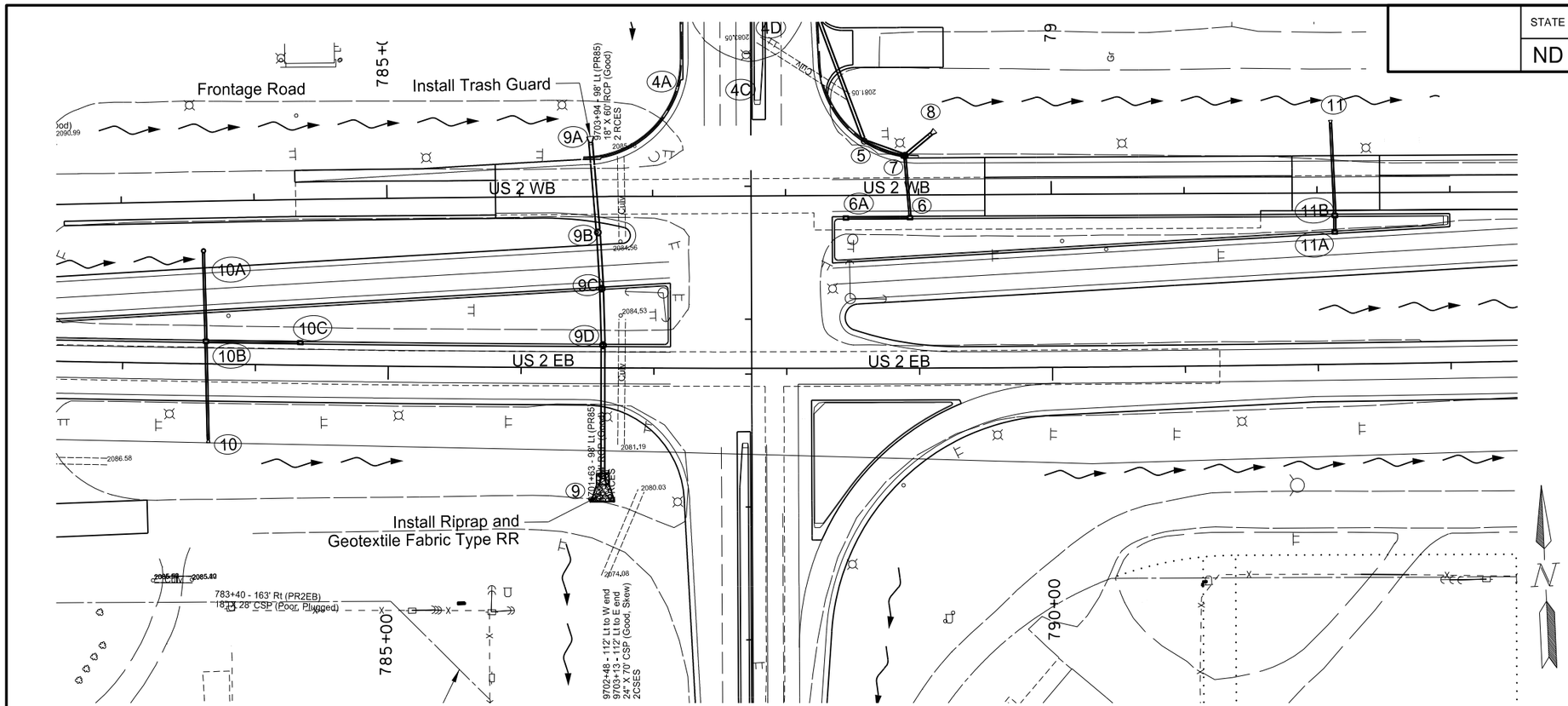

708	1020	Riprap - Loose Rock		
		786+63 - 88' RT	18.7	CY
709	600	Geotextile Fabric-Type RR		
		786+63 - 88' RT	45.5	SY
202	0169	Removal of End Section - All Types & Sizes		
		9701+63 - 98' LT	2	EA
202	0174	Removal of Pipe - All Types & Sizes		
		9701+63 - 98' LT	94	LF
714	4097	Pipe Conduit 15IN - Storm Drain		
		10A to 10B	68	LF
		10B to 10	74	LF
		10C to 10B	71	LF
714	4112	Pipe Conduit 30IN - Storm Drain		
		9B to 9C	41	LF
		9C to 9D	43	LF
		9D to 9	100	LF
722	1100	Manhole Riser - 48IN		
		9C	11.71	LF
		9D	12.03	LF
		9B	8.97	LF
722	3510	Inlet - Type 2		
		10B	1	EA
		10C	1	EA
722	3701	Inlet Special - Type 2 48IN		
		9C	1	EA
		9D	1	EA
722	3730	Inlet Special Catch Basin 9IN Beehive 48IN		
		9B	1	EA
722	4020	Inlet Catch Basin 9IN Beehive		
		10A	1	EA

Note: Stations & Offsets from US 85 Chain: PR85

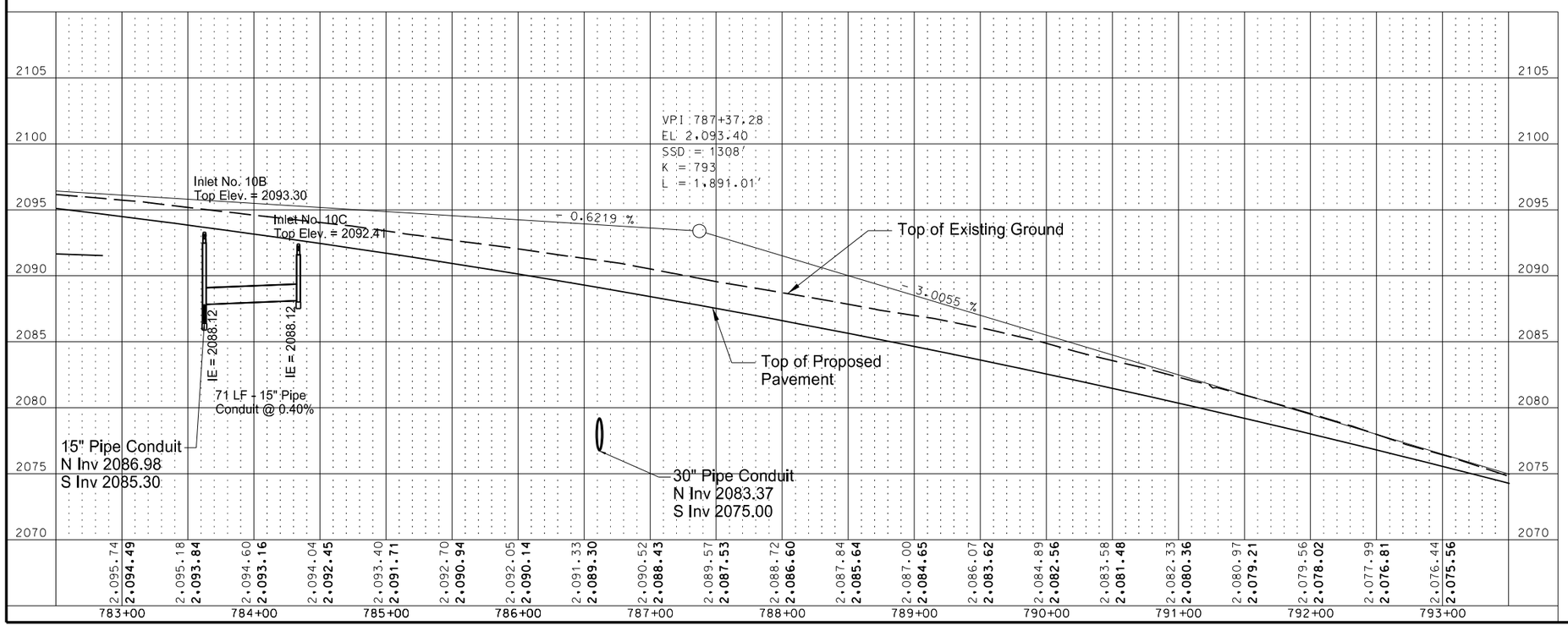

See Section 30
Sheet 10 for
Profile Grade
Line Information

This document was originally issued and sealed by Erin L. Hunker, Registration Number PE- 6657, on 9/26/13 and the original document is stored at the North Dakota Department of Transportation

Storm Sewer

US 85 Intersection Improvements

US 2 EB
783+00 to 793+00

STATE	PROJECT NO.	SECTION NO.	SHEET NO.
ND	SOIA-7-085(092)183	55	10

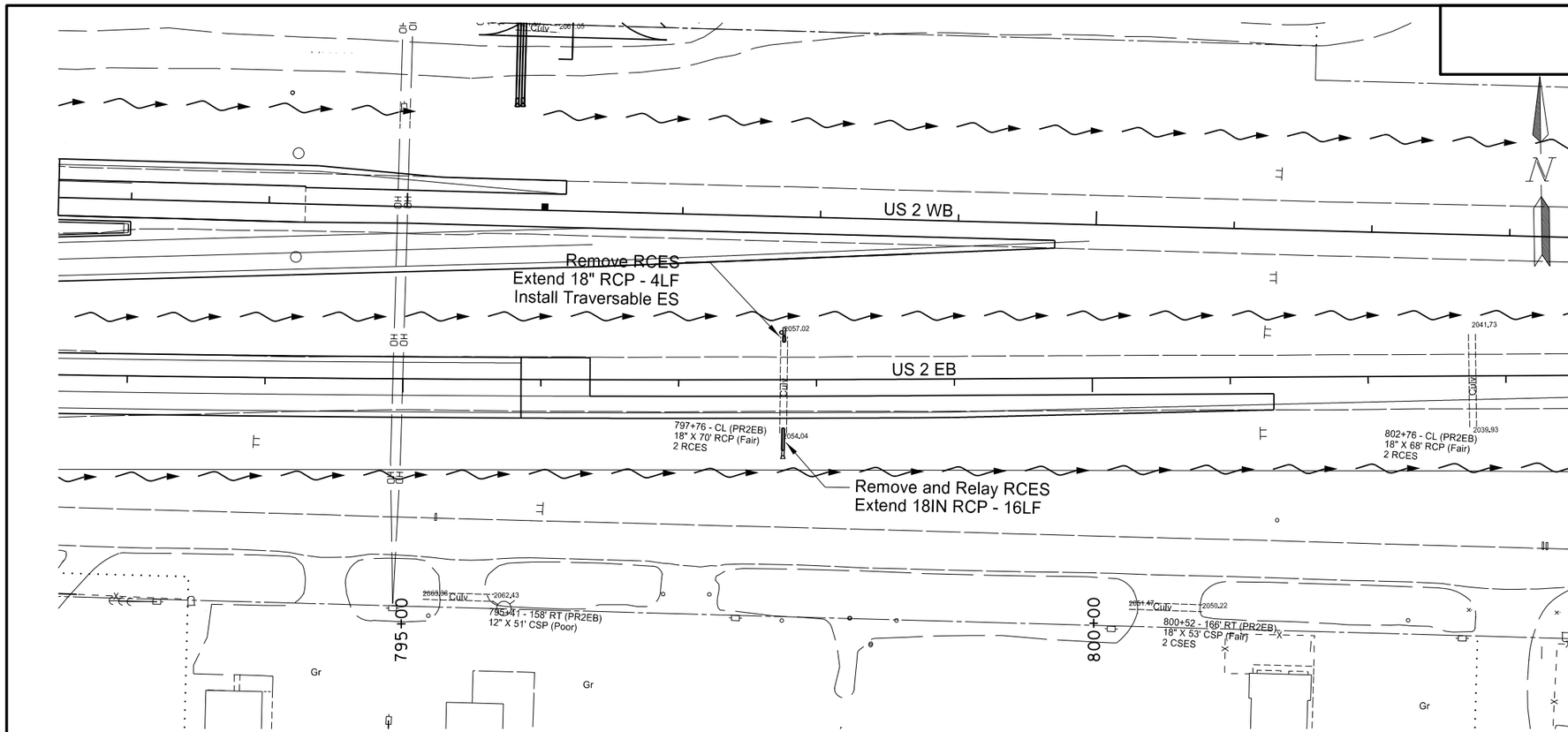

202	0169	Removal of End Section - All Types & Sizes		
		797+76 LT	1	EA
714	0310	Pipe Concrete Reinforced 18IN - CL III		
		797+76 - 27' LT	4	LF
		797+76 - 35' RT	16	LF
714	3013	End Sect Traversable Reinf Conc. - 18IN		
		797+76 LT	1	EA
714	9660	Remove and Relay End Sec - All Types and Sizes		
		797+76 RT	1	EA

Note: Stations & Offsets from US 2 EB Chain: PR2EB

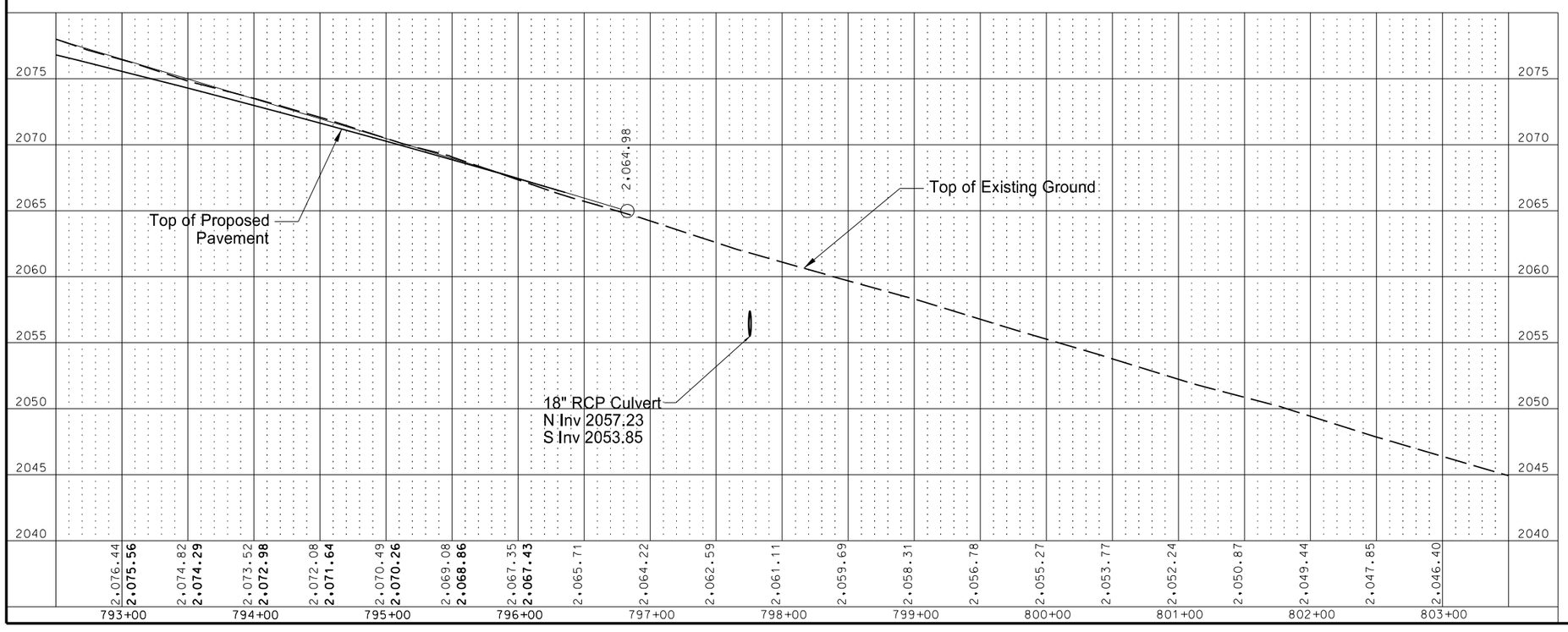

See Section 30 Sheet 10 for Profile Grade Line Information

This document was originally issued and sealed by Erin L. Hunker, Registration Number PE- 6657, on 9/26/13 and the original document is stored at the North Dakota Department of Transportation

Storm Sewer

US 85 Intersection Improvements

US 2 EB
793+00 to 797+89.60

STATE	PROJECT NO.	SECTION NO.	SHEET NO.
ND	SOIA-7-085(092)183	60	1

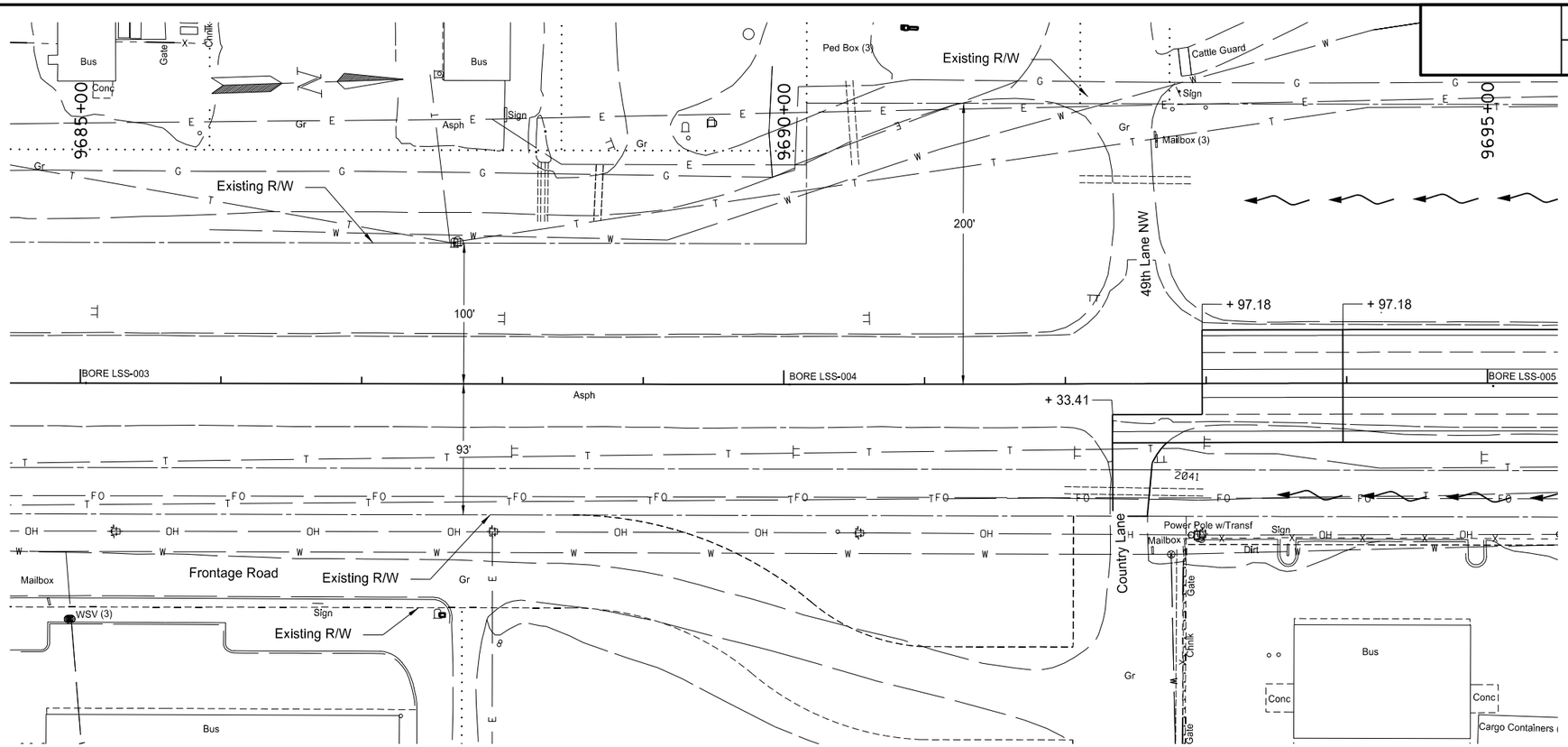

302	0100	Salvaged Base Course		
		9692+33.41 to 9695+00	3083	TON
		9692+46 RT	76	TON
401	0100	MC70 or 250 Liquid Asphalt		
		9692+33.41 to 9695+00	539	GAL
401	0150	SS1H or CSS1H or MS1 Emulsified Asphalt		
		9692+33.41 to 9695+00	278	GAL
410	0215	Superpave FAA 45		
		9692+33.41 to 9695+00	760	TON
410	0445	PG 58-28 Asphalt Cement		
		9692+33.41 to 9695+00	28	TON
410	0460	PG 64-28 Asphalt Cement		
		9692+33.41 to 9695+00	19	TON

Note: Stations & Offsets from US 85 Chain: PR85

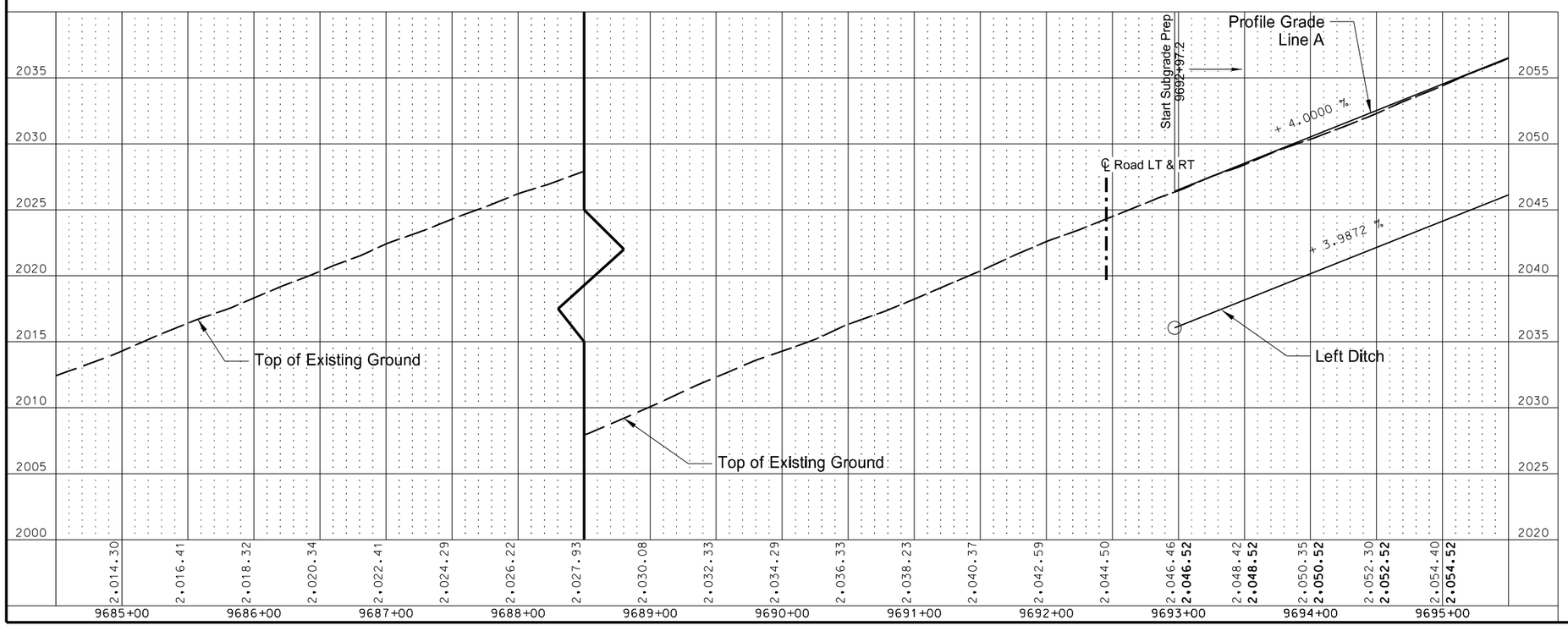

See Section 30 Sheet 10 for Profile Grade Line Information

This document was originally issued and sealed by Eric Bach, Registration Number PE- 5506, on 9/26/13 and the original document is stored at the North Dakota Department of Transportation

Plan & Profile

US 85 Intersection Improvements

US 85
9692+33.41 to 9695+00

STATE	PROJECT NO.	SECTION NO.	SHEET NO.
ND	SOIA-7-085(092)183	60	2

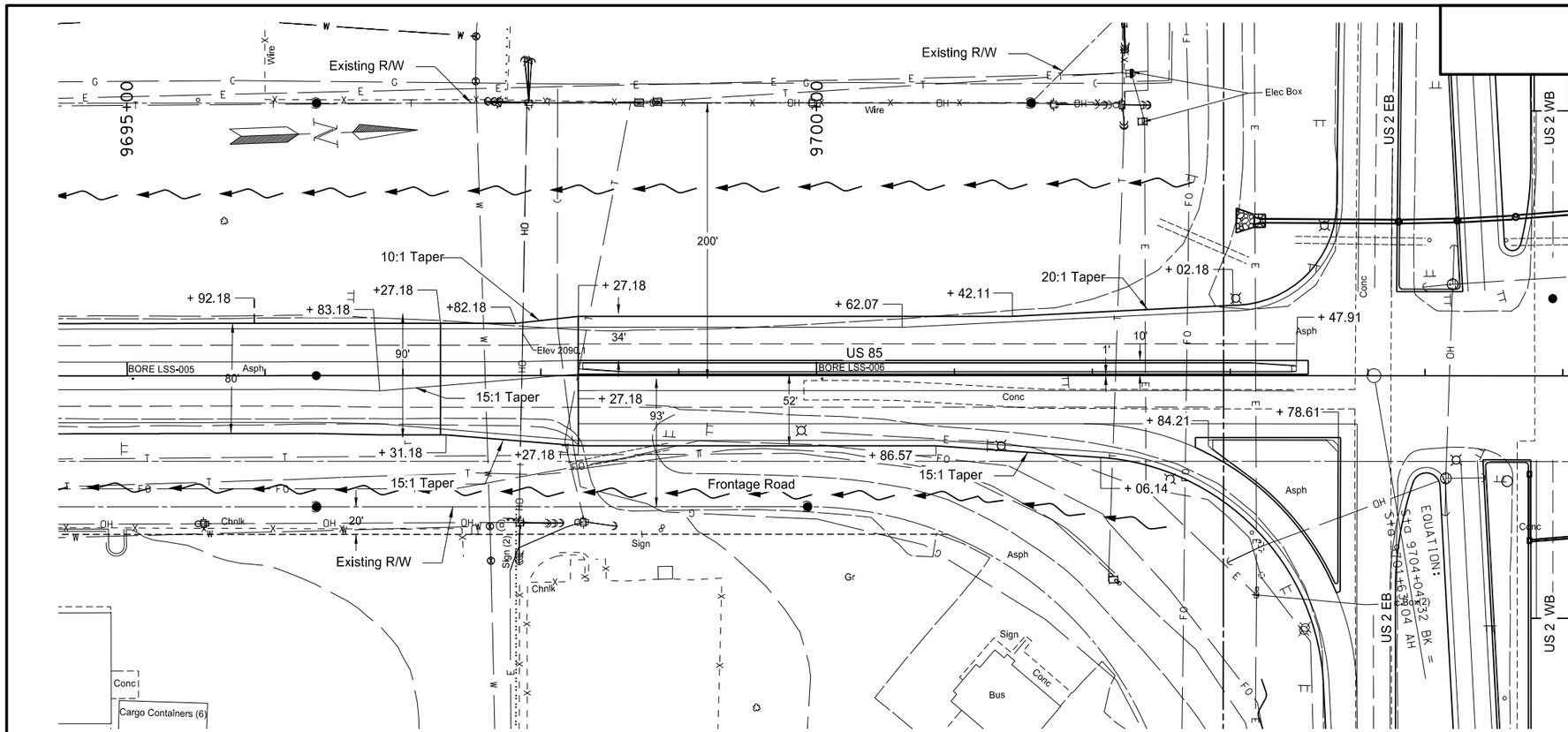

302	0100	Salvaged Base Course		
		9695+00 to 9698+27.18	4638	TON
401	0100	MC70 or 250 Liquid Asphalt		
		9695+00 to 9698+27.18	819	GAL
401	0150	SS1H or CSS1H or MS1 Emulsified Asphalt		
		9695+00 to 9698+27.18	392	GAL
410	0215	Superpave FAA 45		
		9695+00 to 9698+27.18	1114	TON
410	0445	PG 58-28 Asphalt Cement		
		9695+00 to 9698+27.18	42	TON
410	0460	PG 64-28 Asphalt Cement		
		9695+00 to 9698+27.18	26	TON

Note: Stations & Offsets from US 85 Chain: PR85

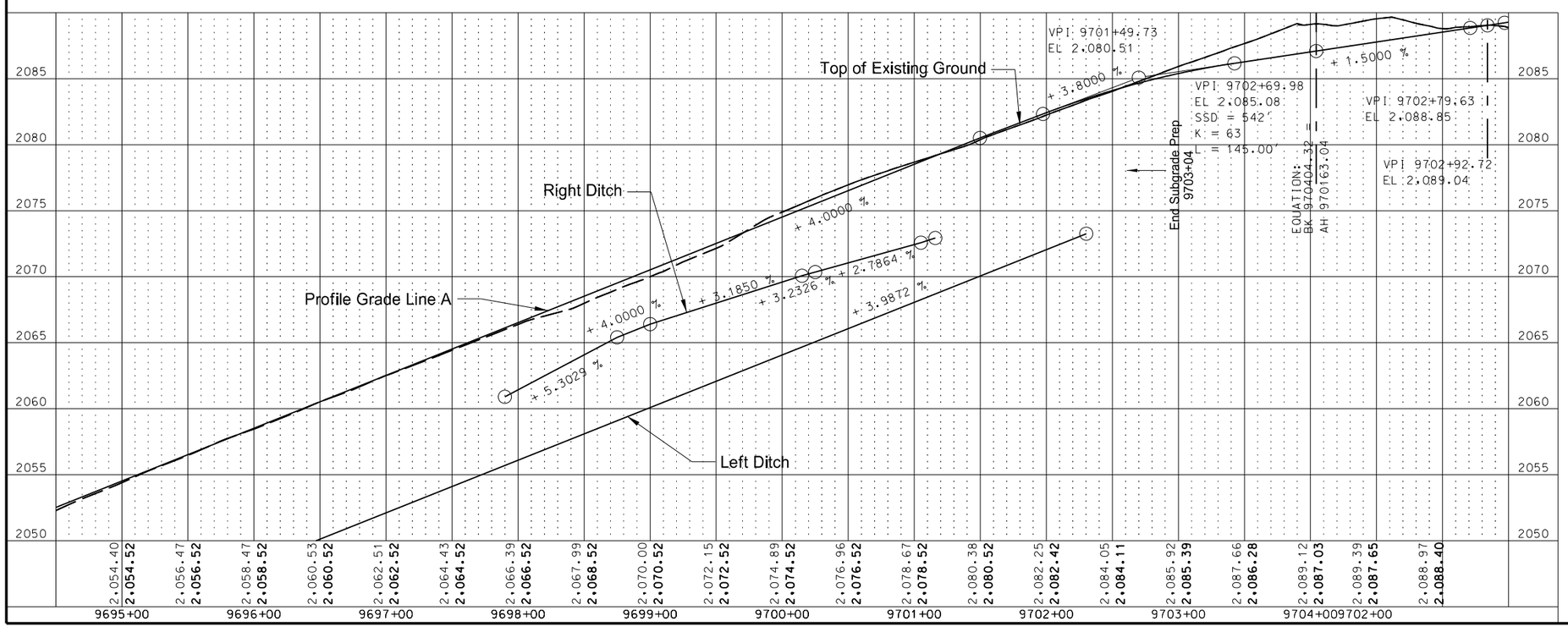

See Section 30 Sheet 10 for Profile Grade Line Information

This document was originally issued and sealed by Eric Bach, Registration Number PE- 5506, on 9/26/13 and the original document is stored at the North Dakota Department of Transportation

Plan & Profile

US 85 Intersection Improvements

US 85
9695+00 to 9704+04.32 BK

STATE	PROJECT NO.	SECTION NO.	SHEET NO.
ND	SOIA-7-085(092)183	60	3

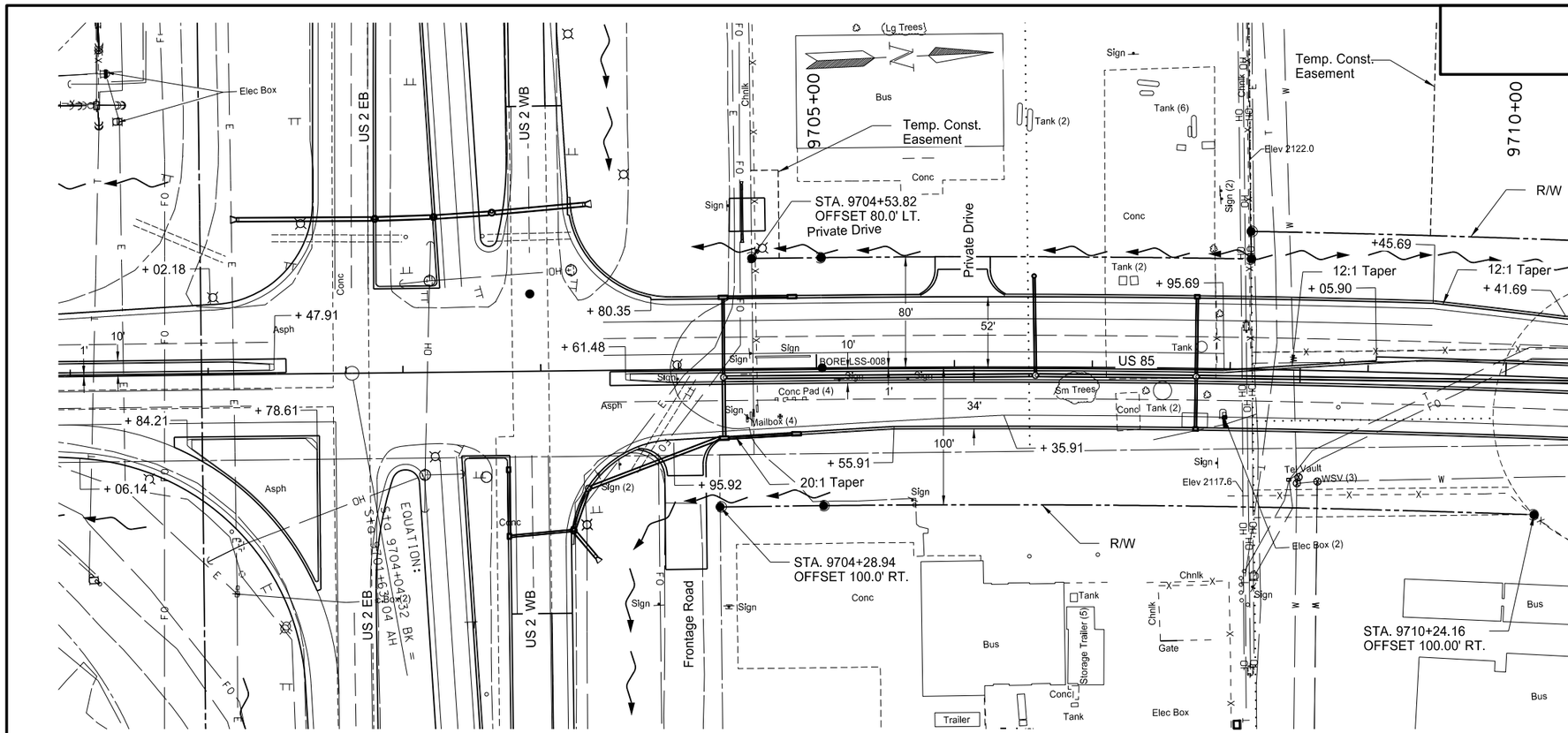

302	0100	Salvaged Base Course		
		9704+04 RT	225	TON
		9706+06 LT	86	TON
401	0100	MC70 or 250 Liquid Asphalt		
		9704+04 RT	31	GAL
		9706+06 LT	30	GAL
401	0150	SS1H or CSS1H or MS1 Emulsified Asphalt		
		9704+04 RT	13	GAL
		9706+06 LT	12	GAL
410	0215	Superpave FAA 45		
		9704+04 RT	38	TON
		9706+06 LT	36	TON
410	0445	PG 58-28 Asphalt Cement		
		9704+04 RT	1	TON
		9706+06 LT	1	TON
410	0460	PG 64-28 Asphalt Cement		
		9704+04 RT	2	TON
		9706+06 LT	2	TON

Note: Stations & Offsets from US 85 Chain: PR85

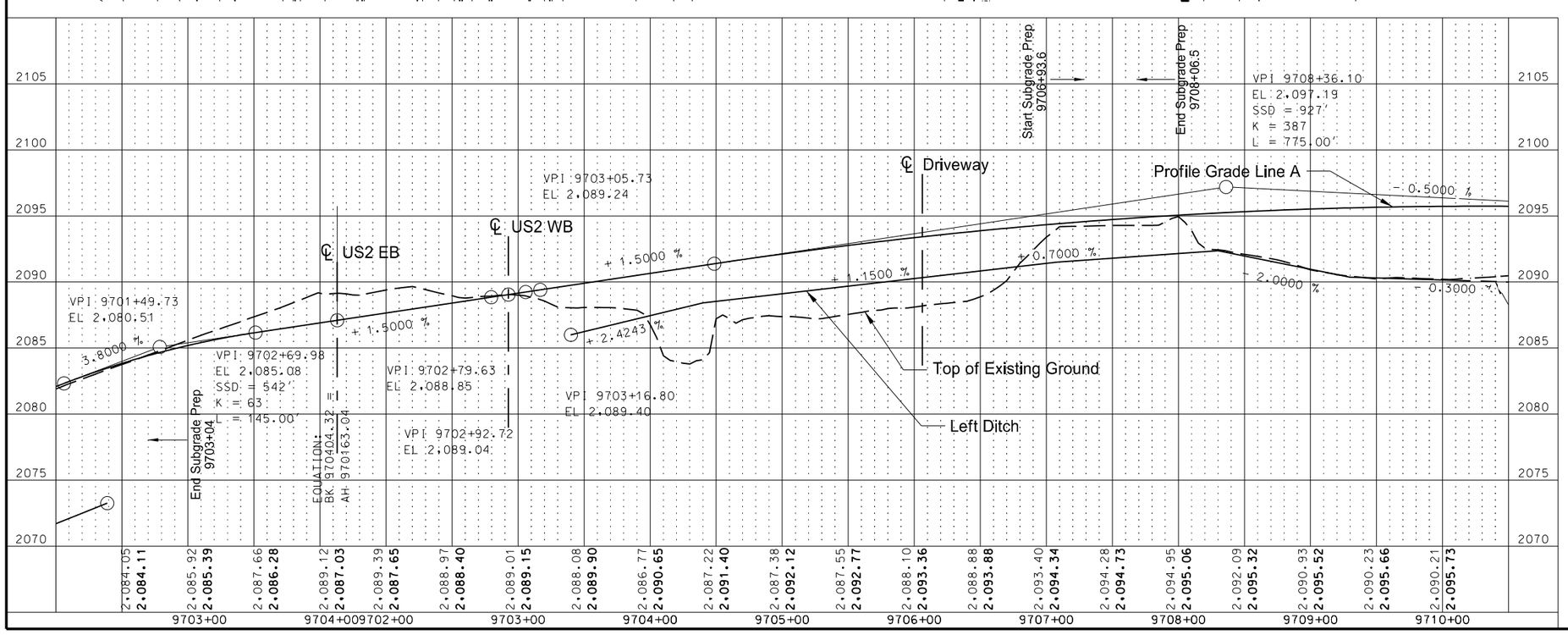

See Section 30 Sheet 10 for Profile Grade Line Information

This document was originally issued and sealed by Eric Bach, Registration Number PE- 5506, on 9/12/13 and the original document is stored at the North Dakota Department of Transportation

Plan & Profile

US 85 Intersection Improvements

US 85
9701+63.04 AH to 9710+00

STATE	PROJECT NO.	SECTION NO.	SHEET NO.
ND	SOIA-7-085(092)183	60	4

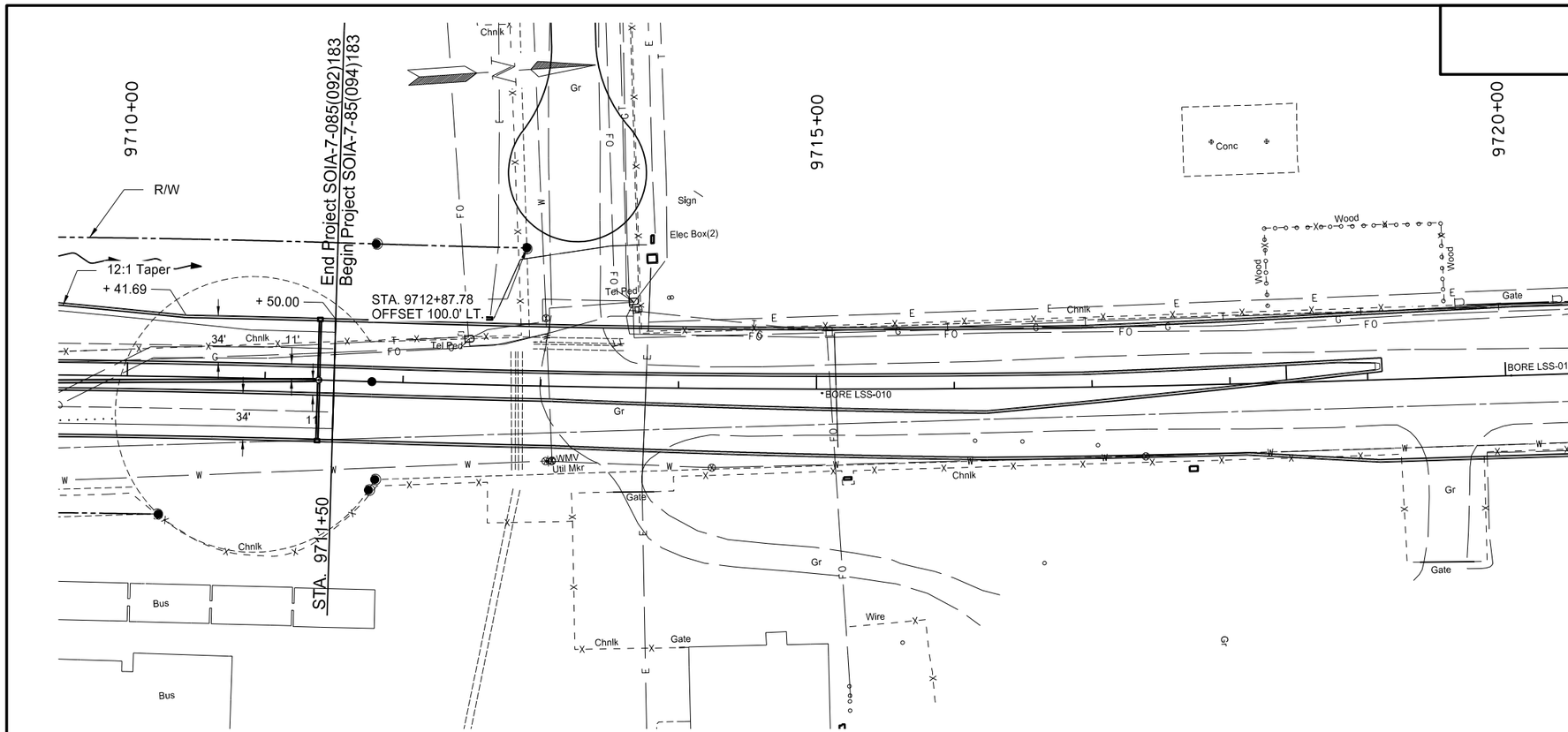

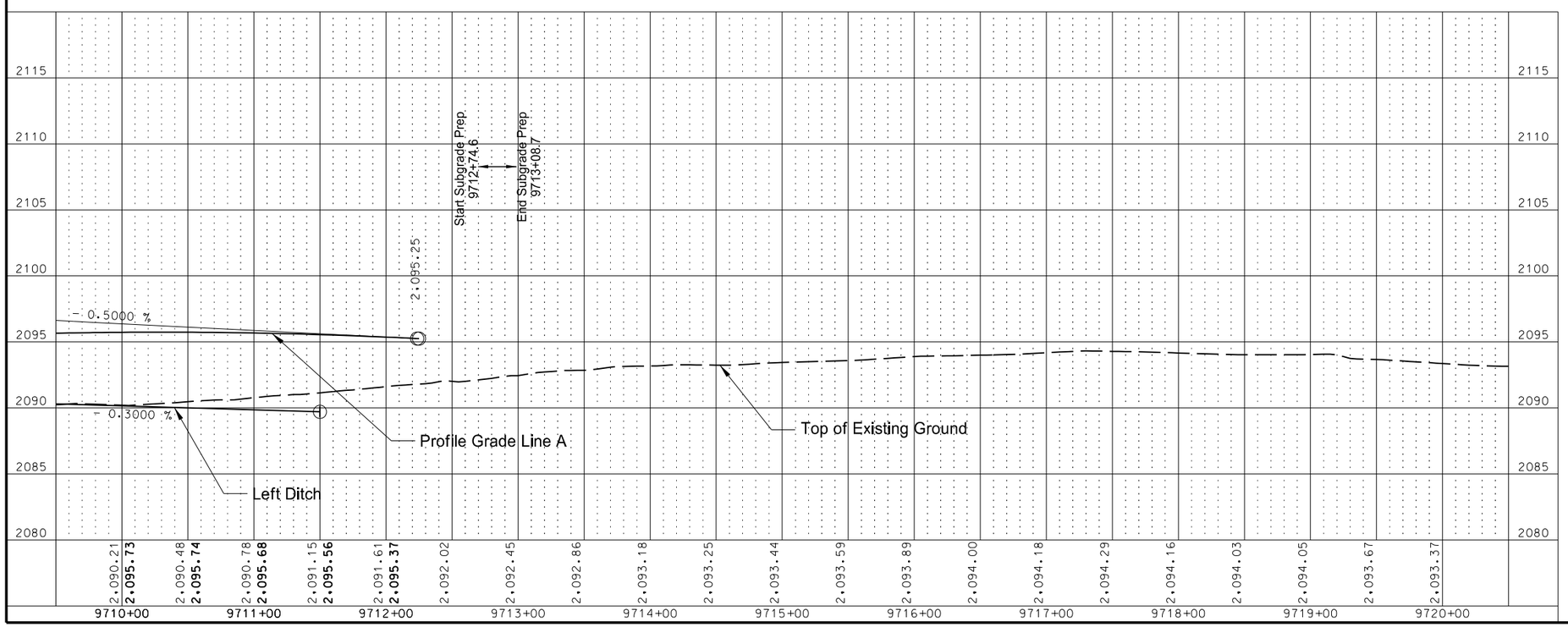

See Section 30 Sheet 10 for Profile Grade Line Information

This document was originally issued and sealed by Eric Bach, Registration Number PE- 5506, on 9/12/13 and the original document is stored at the North Dakota Department of Transportation

Plan & Profile

US 85 Intersection Improvements

US 85
9710+00 to 9711+50

STATE	PROJECT NO.	SECTION NO.	SHEET NO.
ND	SOIA-7-085(092)183	60	5

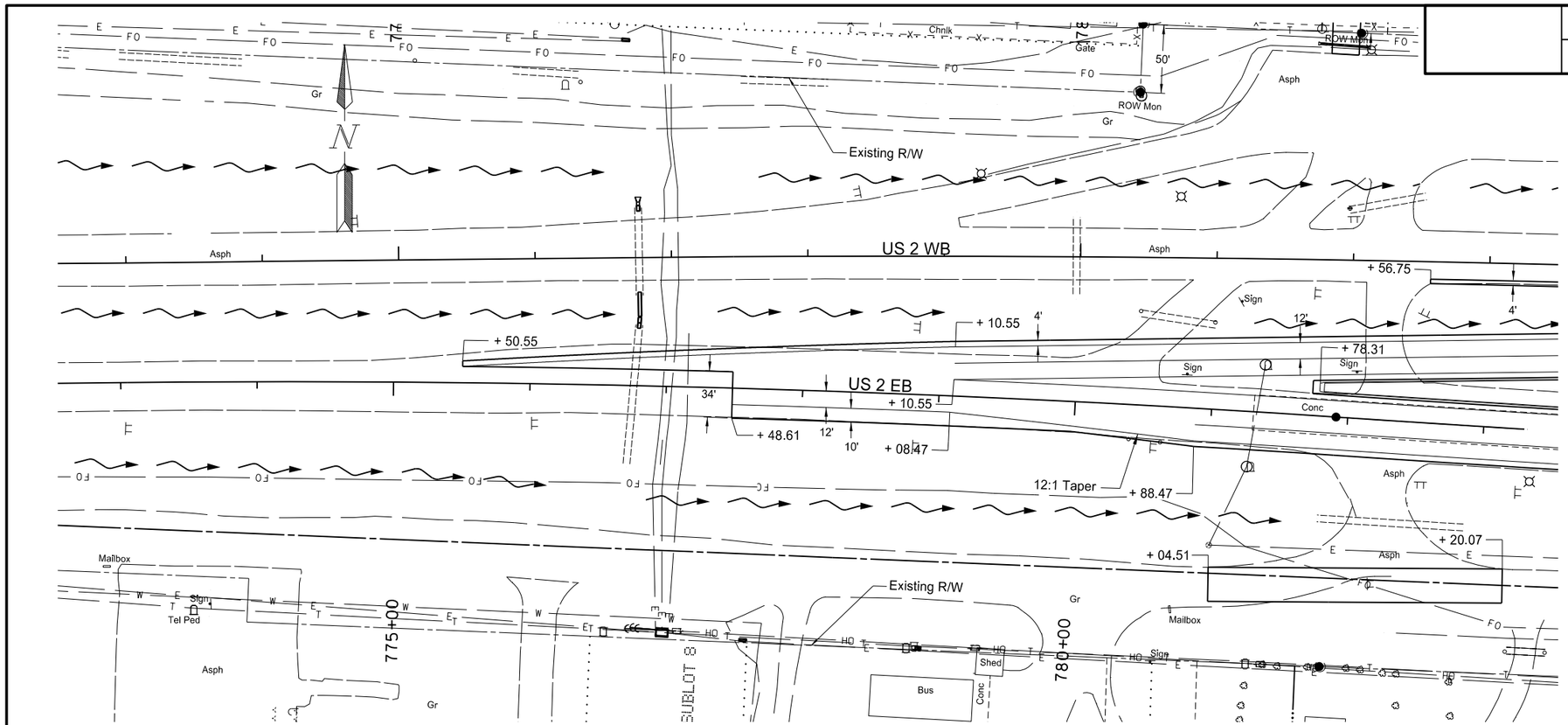

302	0100	Salvaged Base Course		
		781+92 - 151' LT	47	TON
		782+56.75 to 783+00	16	TON
401	0100	MC70 or 250 Liquid Asphalt		
		782+56.75 to 783+00	6	GAL
401	0150	SS1H or CSS1H or MS1 Emulsified Asphalt		
		782+56.75 to 783+00	5	GAL
410	0215	Superpave FAA 45		
		782+56.75 to 783+00	9	TON
410	0445	PG 58-28 Asphalt Cement		
		782+56.75 to 783+00	1	TON
410	0460	PG 64-28 Asphalt Cement		
		782+56.75 to 783+00	1	TON

Note: Stations & Offsets from US 2 WB Chain: PR2WB

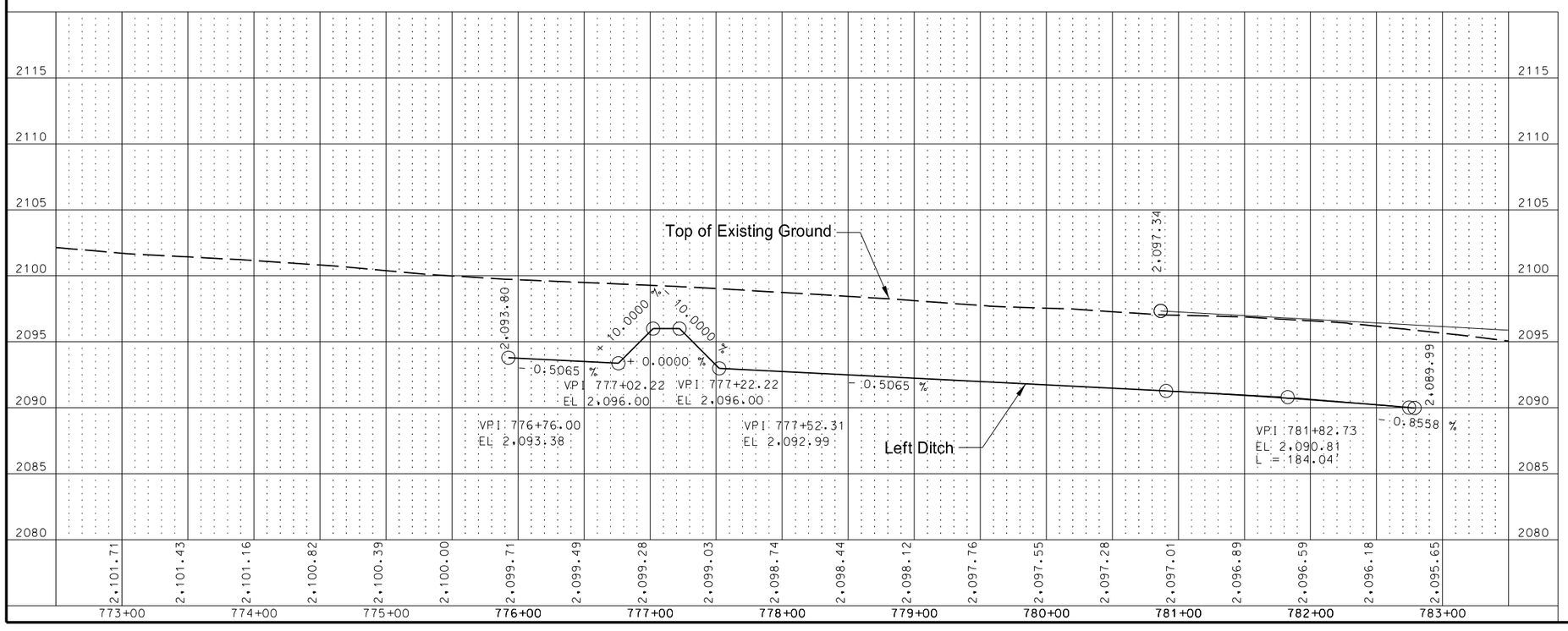

This document was originally issued and sealed by Eric Bach, Registration Number PE- 5506, on 9/12/13 and the original document is stored at the North Dakota Department of Transportation

Plan & Profile

US 85 Intersection Improvements

US 2 WB
782+56.75 to 783+00

STATE	PROJECT NO.	SECTION NO.	SHEET NO.
ND	SOIA-7-085(092)183	60	6

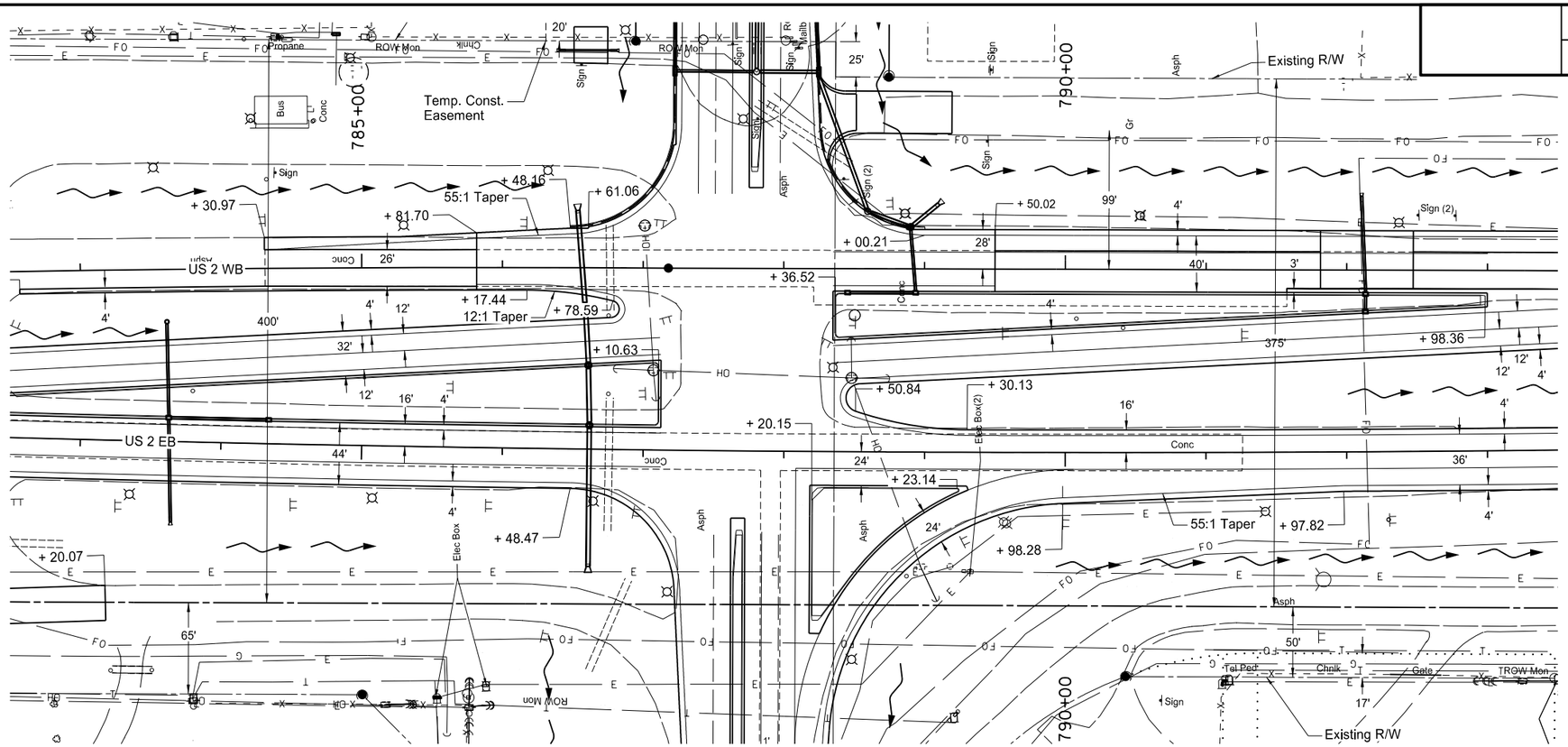

302	0100	Salvaged Base Course		
		783+00 to 785+81.70	168	TON
		786+62 - 145' LT	54	TON
		789+50.02 to 793+00	48	TON
401	0100	MC70 or 250 Liquid Asphalt		
		783+00 to 785+81.70	63	GAL
		789+50.02 to 793+00	20	GAL
401	0150	SS1H or CSS1H or MS1 Emulsified Asphalt		
		783+00 to 785+81.70	49	GAL
		789+50.02 to 793+00	35	GAL
410	0215	Superpave FAA 45		
		783+00 to 785+81.70	94	TON
		789+50.02 to 793+00	78	TON
410	0445	PG 58-28 Asphalt Cement		
		783+00 to 785+81.70	3	TON
		789+50.02 to 793+00	1	TON
410	0460	PG 64-28 Asphalt Cement		
		783+00 to 785+81.70	4	TON
		789+50.02 to 793+00	4	TON

Note: Stations & Offsets from US 2 WB Chain: PR2WB

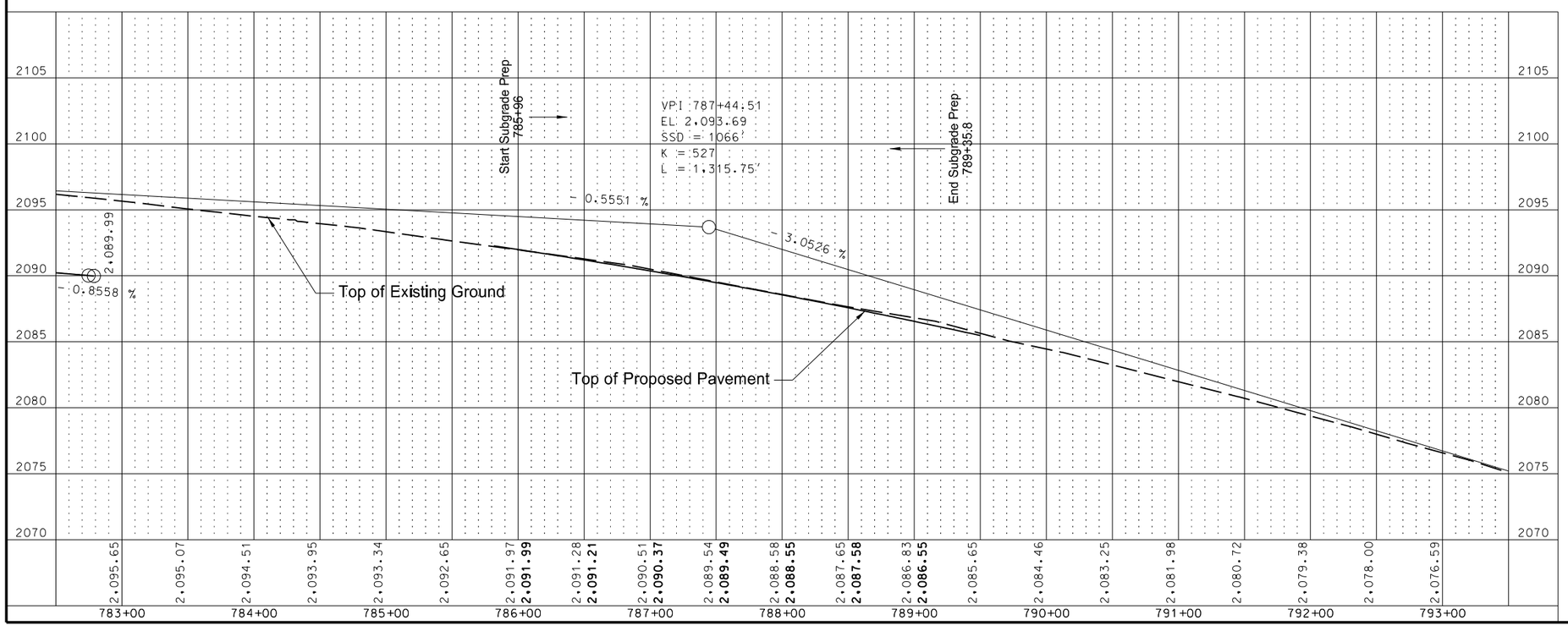

This document was originally issued and sealed by Eric Bach, Registration Number PE- 5506, on 9/12/13 and the original document is stored at the North Dakota Department of Transportation

Plan & Profile

US 85 Intersection Improvements

US 2 WB
783+00 to 793+00

STATE	PROJECT NO.	SECTION NO.	SHEET NO.
ND	SOIA-7-085(092)183	60	7

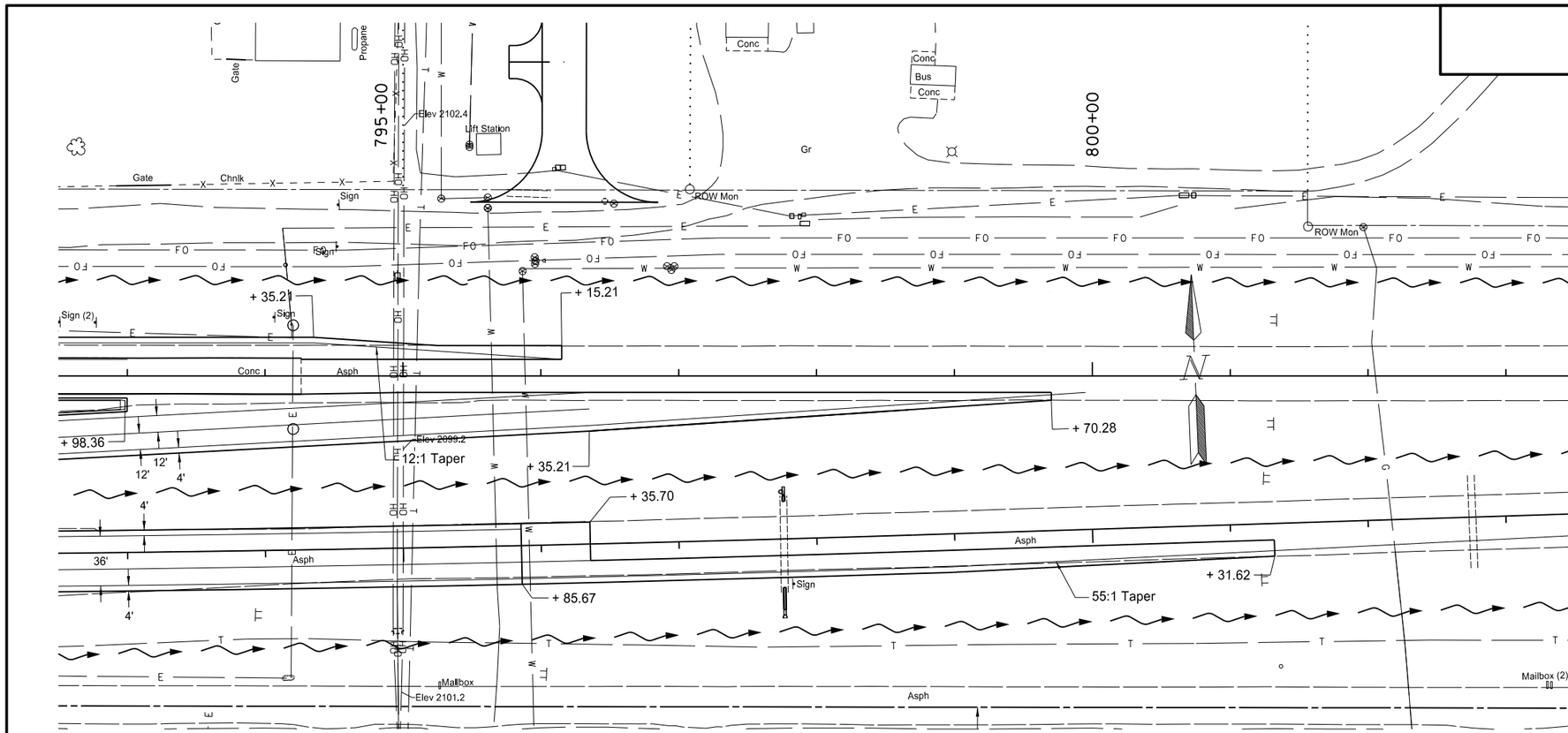

302	0100	Salvaged Base Course		
		793+00 to 796+15.21	159	TON
401	0100	MC70 or 250 Liquid Asphalt		
		793+00 to 796+15.21	66	GAL
401	0150	SS1H or CSS1H or MS1 Emulsified Asphalt		
		793+00 to 796+15.21	58	GAL
410	0215	Superpave FAA 45		
		793+00 to 796+15.21	128	TON
410	0445	PG 58-28 Asphalt Cement		
		793+00 to 796+15.21	3	TON
410	0460	PG 64-28 Asphalt Cement		
		793+00 to 796+15.21	5	TON

Note: Stations & Offsets from US 2 WB Chain: PR2WB

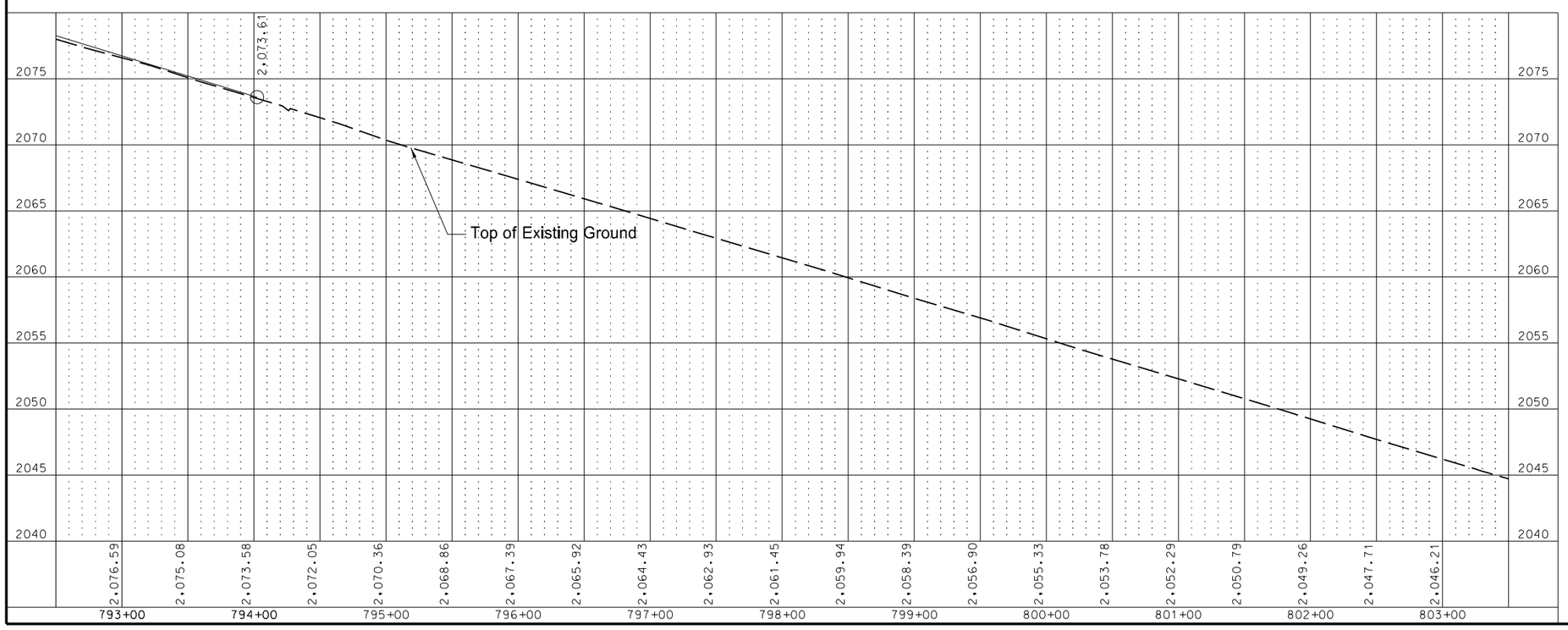

This document was originally issued and sealed by Eric Bach, Registration Number PE- 5506, on 9/12/13 and the original document is stored at the North Dakota Department of Transportation

Plan & Profile

US 85 Intersection Improvements

US 2 WB
793+00 to 799+70.28

STATE	PROJECT NO.	SECTION NO.	SHEET NO.
ND	SOIA-7-085(092)183	60	8

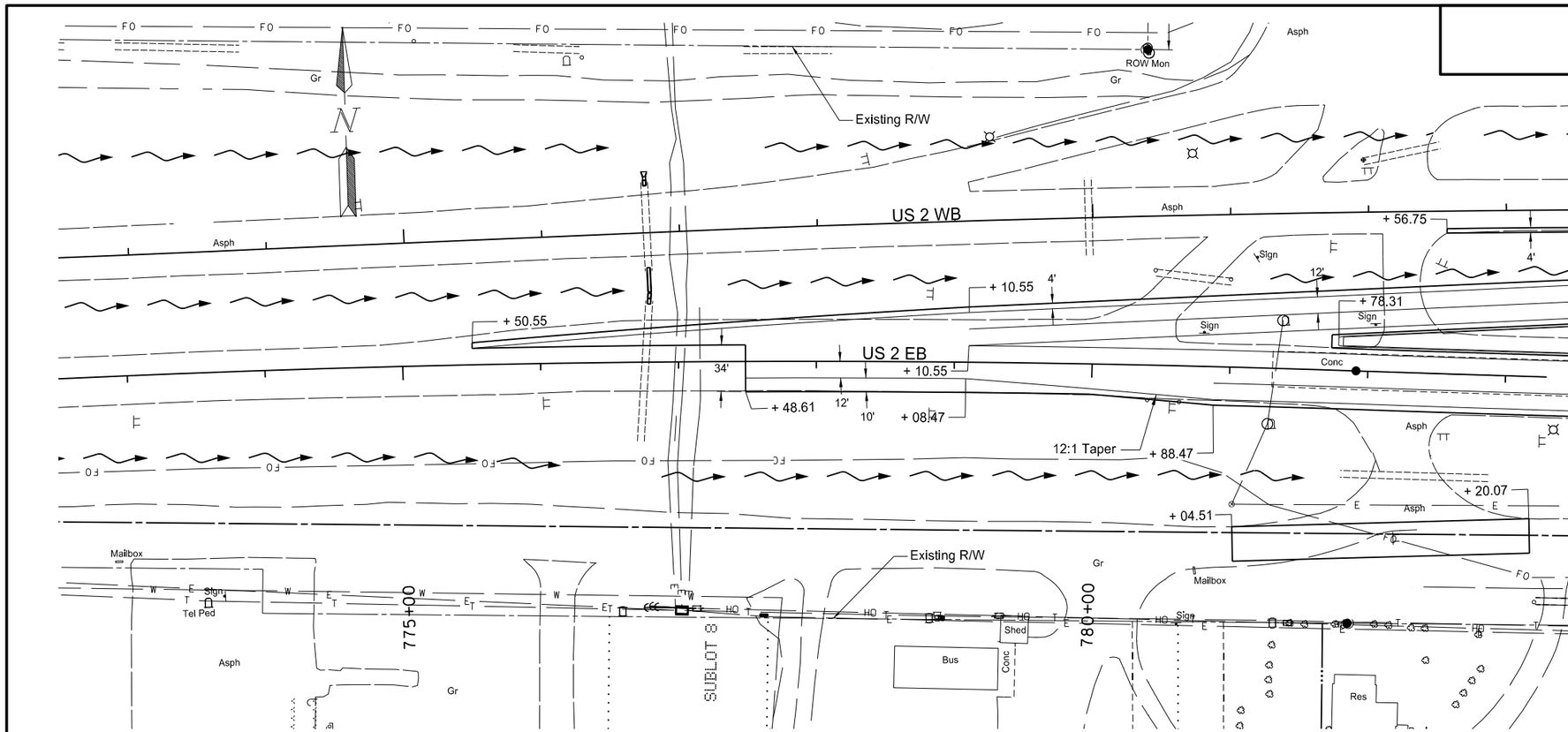

302	0100	Salvaged Base Course		
		781+05.05 to 783+00 RT	435	TON
302	0356	Aggregate Surface Course CL 13		
		781+05.05 to 783+00 RT	120	TON

Note: Stations & Offsets from US 2 EB Chain: PR2EB

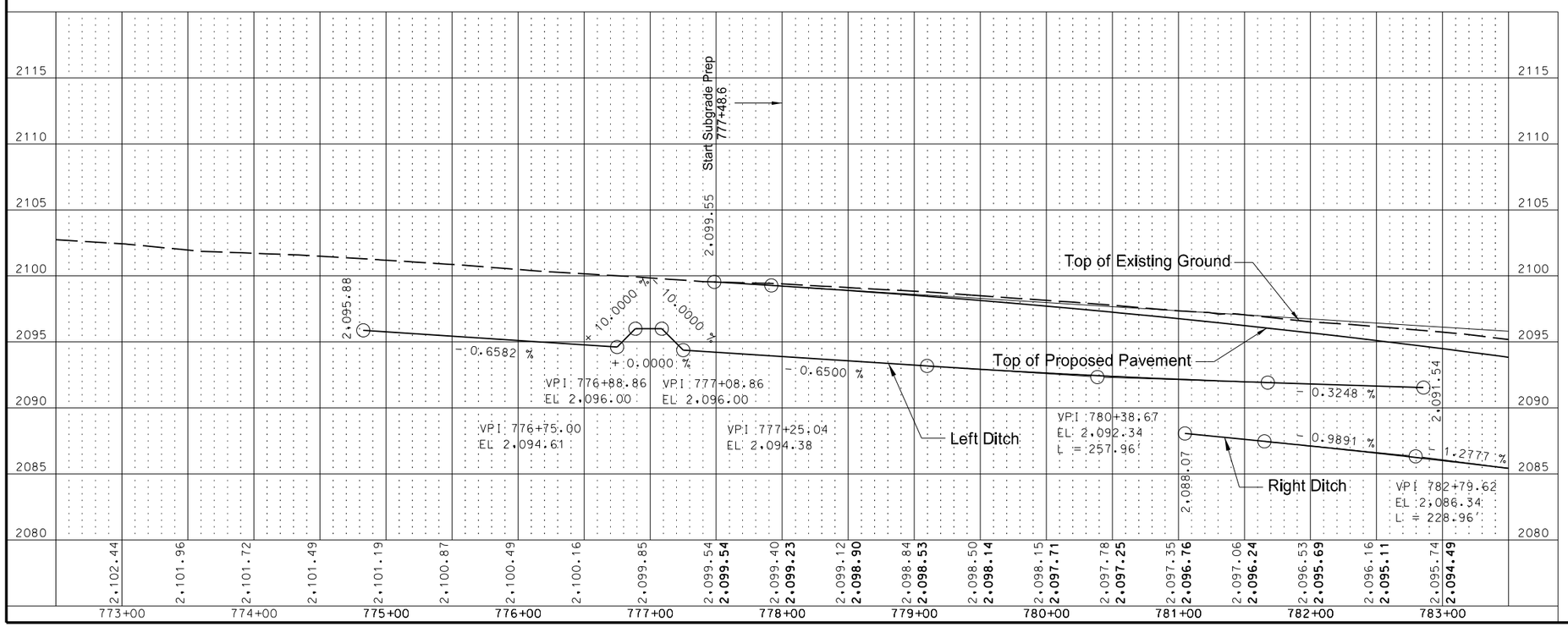

This document was originally issued and sealed by Eric Bach, Registration Number PE- 5506, on 9/12/13 and the original document is stored at the North Dakota Department of Transportation

Plan & Profile

US 85 Intersection Improvements

US 2 EB
775+50.55 to 783+00

STATE	PROJECT NO.	SECTION NO.	SHEET NO.
ND	SOIA-7-085(092)183	60	9

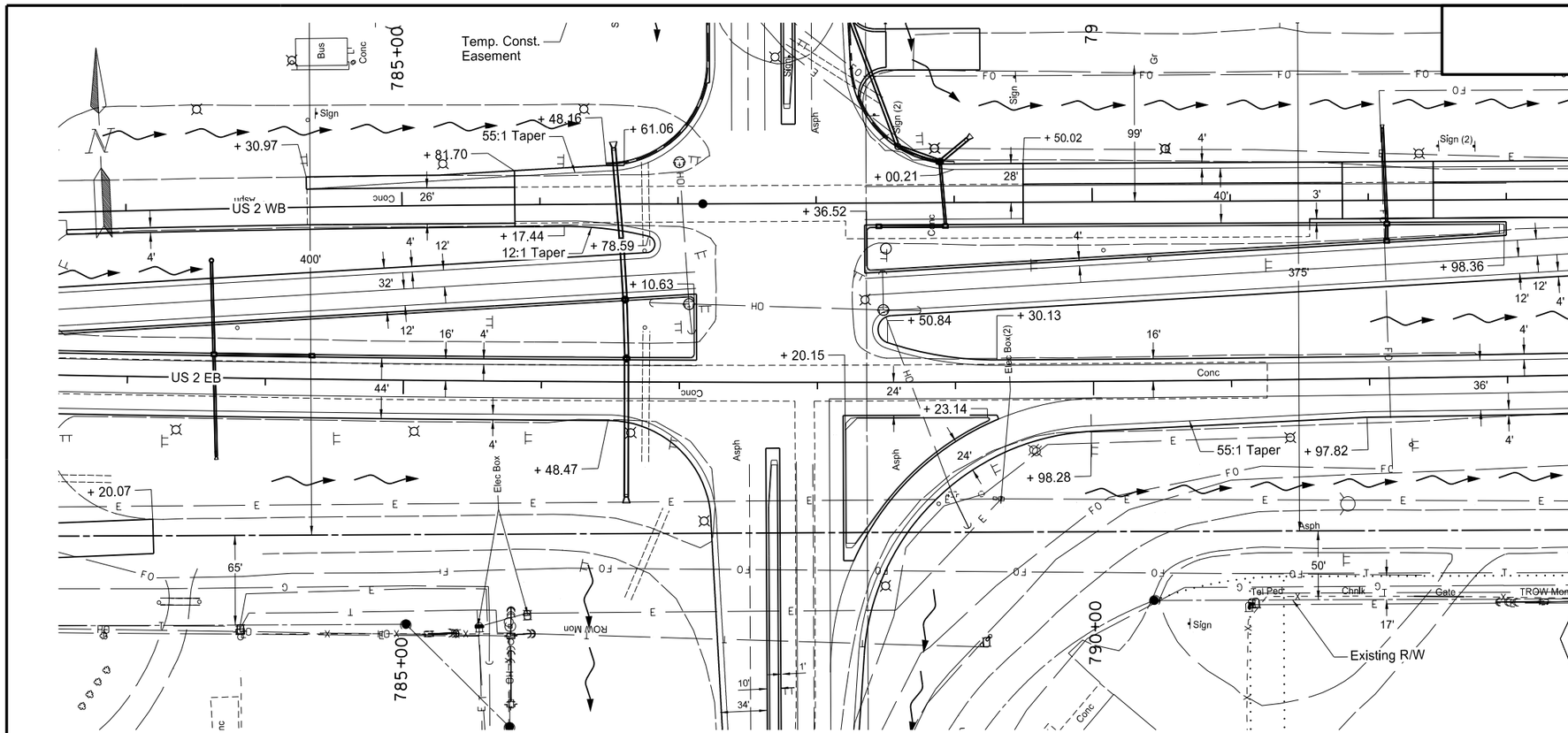

302	0100	Salvaged Base Course		
		783+00 to 783+20.69 RT	52	TON
302	0356	Aggregate Surface Course CL 13		
		783+00 to 783+20.69 RT	14	TON

Note: Stations & Offsets from US 2 EB Chain: PR2EB

This document was originally issued and sealed by Eric Bach, Registration Number PE- 5506, on 9/12/13 and the original document is stored at the North Dakota Department of Transportation

Plan & Profile

US 85 Intersection Improvements

US 2 EB
783+00 to 793+00

STATE	PROJECT NO.	SECTION NO.	SHEET NO.
ND	SOIA-7-085(092)183	60	10

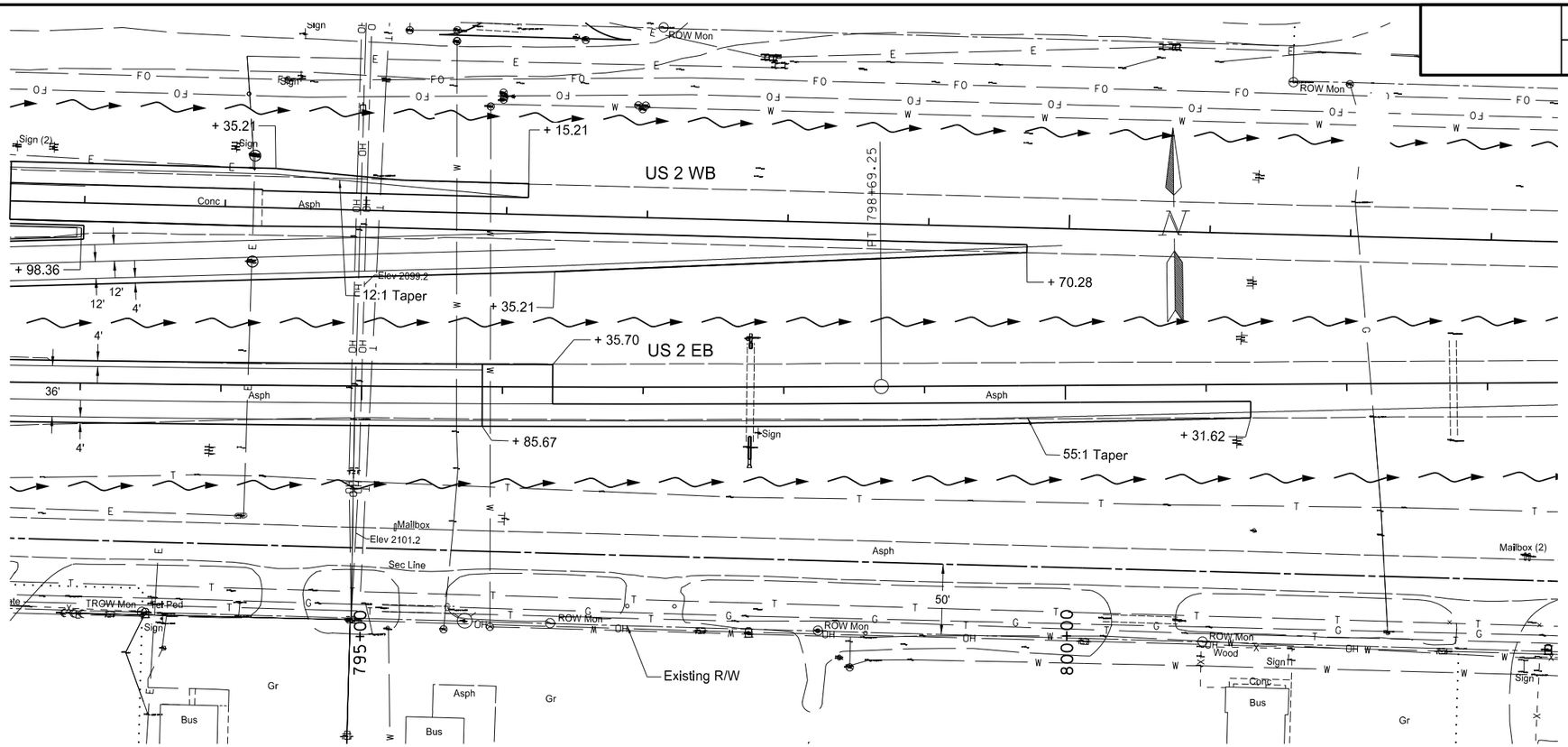

302	0100	Salvaged Base Course		
		795+85.67 to 801+31.62	293	TON
401	0100	MC70 or 250 Liquid Asphalt		
		795+85.67 to 801+31.62	122	GAL
401	0150	SS1H or CSS1H or MS1 Emulsified Asphalt		
		795+85.67 to 801+31.62	117	GAL
410	0215	Superpave FAA 45		
		795+85.67 to 801+31.62	264	TON
410	0445	PG 58-28 Asphalt Cement		
		795+85.67 to 801+31.62	6	TON
410	0460	PG 64-28 Asphalt Cement		
		795+85.67 to 801+31.62	11	TON

Note: Stations & Offsets from US 2 EB Chain: PR2EB

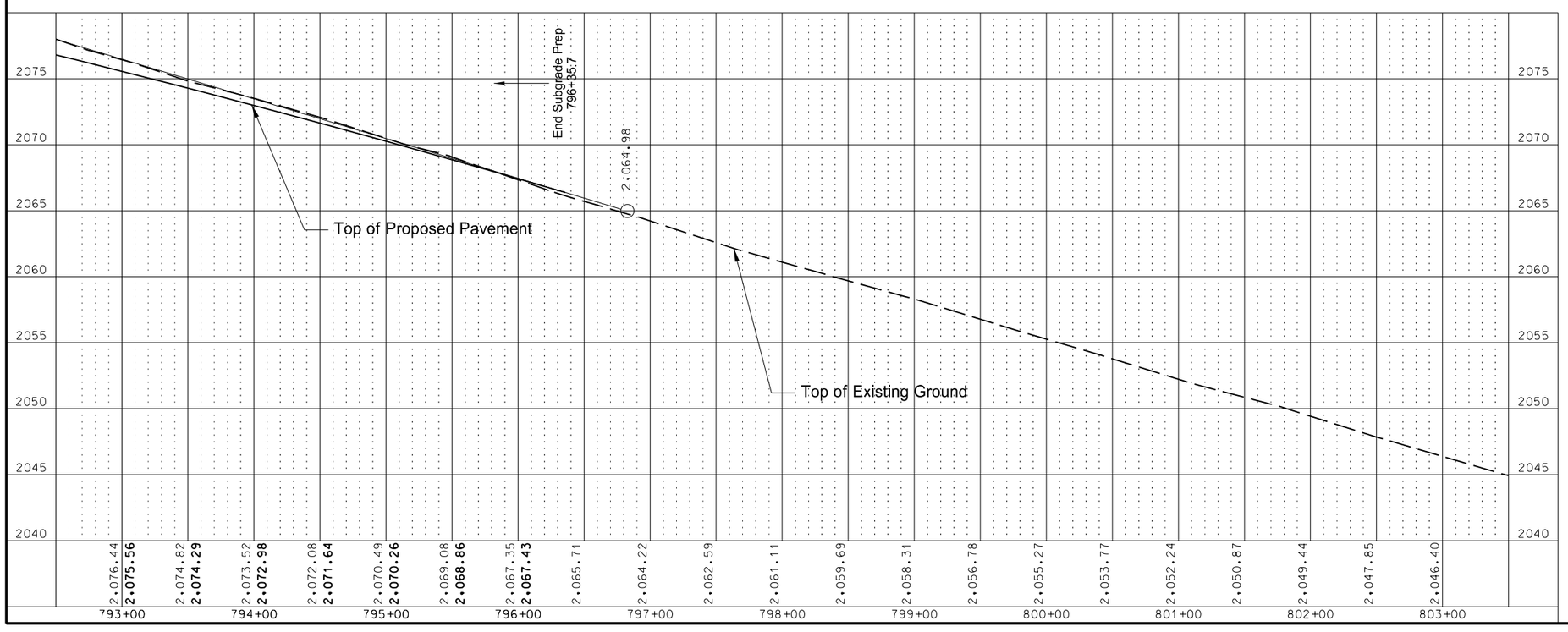

This document was originally issued and sealed by Eric Bach, Registration Number PE- 5506, on 9/12/13 and the original document is stored at the North Dakota Department of Transportation

Plan & Profile

US 85 Intersection Improvements

US 2 EB
793+00 to 801+31.62

STATE	PROJECT NO.	SECTION NO.	SHEET NO.
ND	SOIA-7-085(092)183	75	1

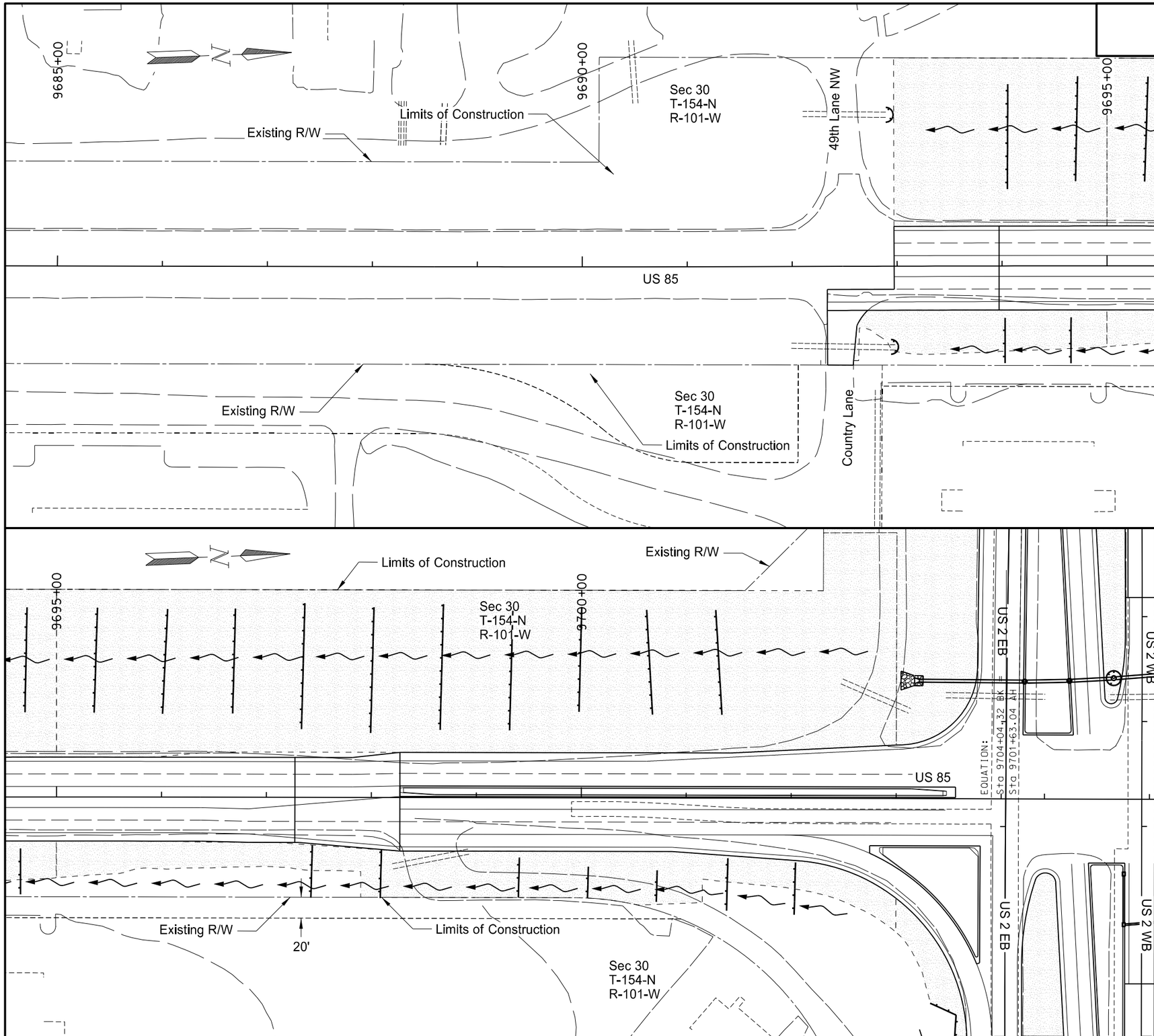

708	2260	Seeding - Type B CL IV		
		9692+58.30 to 9695+00	1.0	AC
		9695+00 to 9703+00	3.6	AC
		TOTAL	4.6	AC
708	5500	Mulching		
		9692+58.30 to 9695+00	1.0	AC
		9695+00 to 9703+00	3.6	AC
		TOTAL	4.6	AC

LEGEND

Fiber Rolls

Ditch Bottom

Seeding - Type B CL IV and Mulching

This document was originally issued and sealed by Eric Bach, Registration Number PE- 5506, on 9/26/13 and the original document is stored at the North Dakota Department of Transportation

Temporary Erosion Control & Wetlands

US 85 Intersection Improvements

US 85
9692+33.41 to 9703+00

STATE	PROJECT NO.	SECTION NO.	SHEET NO.
ND	SOIA-7-085(092)183	75	2

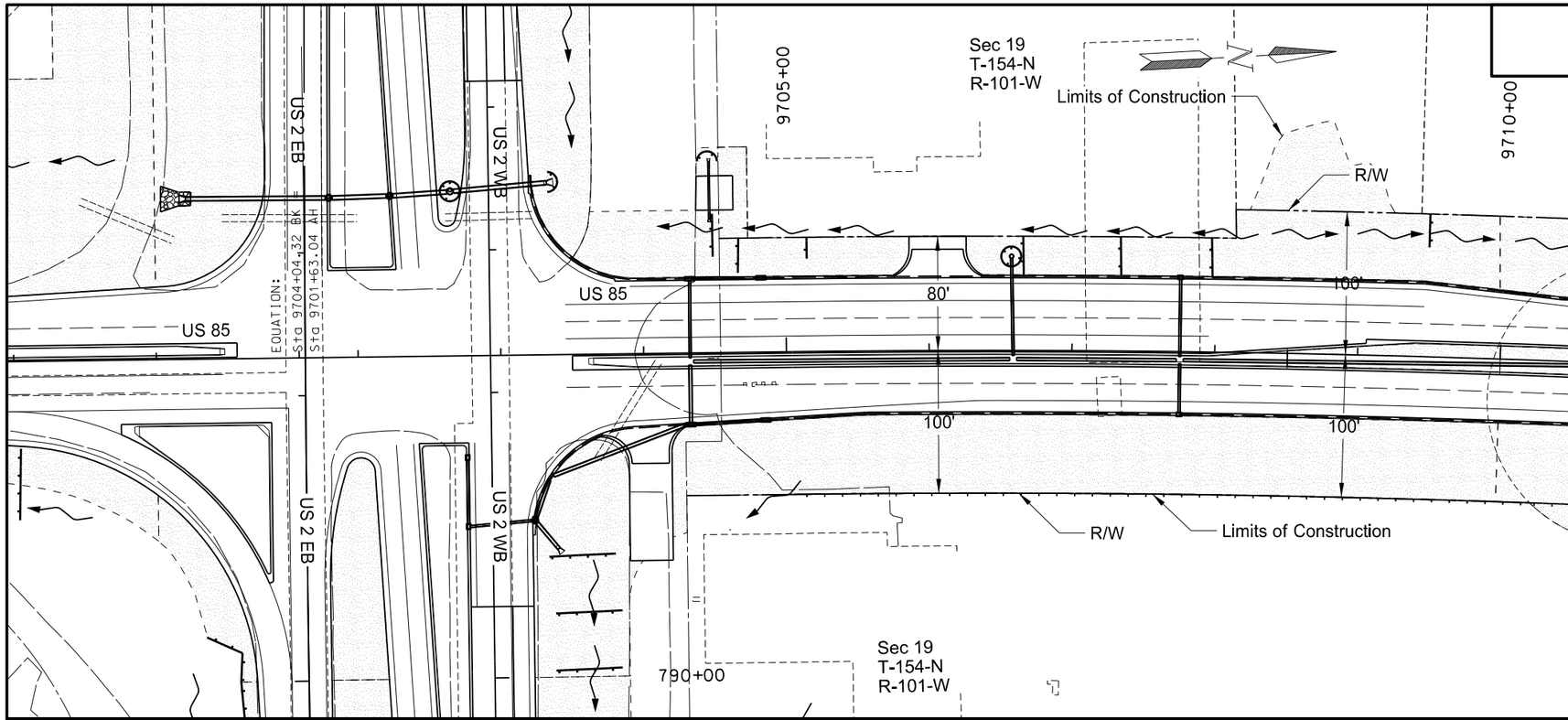

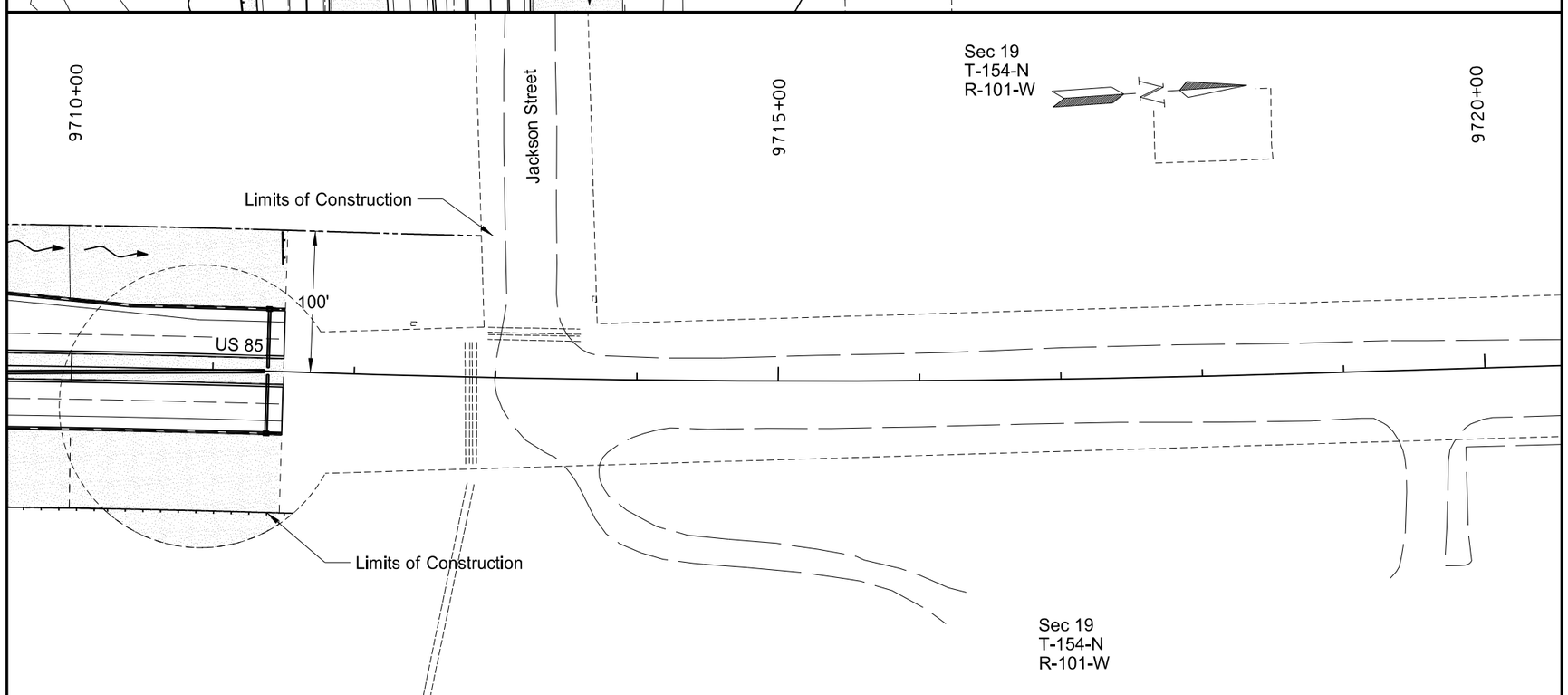

708	2260	Seeding - Type B CL IV		
		9704+00 to 9710+00	1.4	AC
		9710+00 to 9713+00	0.5	AC
		TOTAL	1.9	AC
708	5500	Mulching		
		9704+00 to 9710+00	1.4	AC
		9710+00 to 9713+00	0.5	AC
		TOTAL	1.9	AC

LEGEND

Fiber Rolls

Ditch Bottom

Seeding - Type B CL IV and Mulching

This document was originally issued and sealed by Eric Bach, Registration Number PE- 5506, on 9/26/13 and the original document is stored at the North Dakota Department of Transportation

Temporary Erosion Control & Wetlands

US 85 Intersection Improvements

US 85
9704+00 to 9713+06.95

STATE	PROJECT NO.	SECTION NO.	SHEET NO.
ND	SOIA-7-085(092)183	75	3

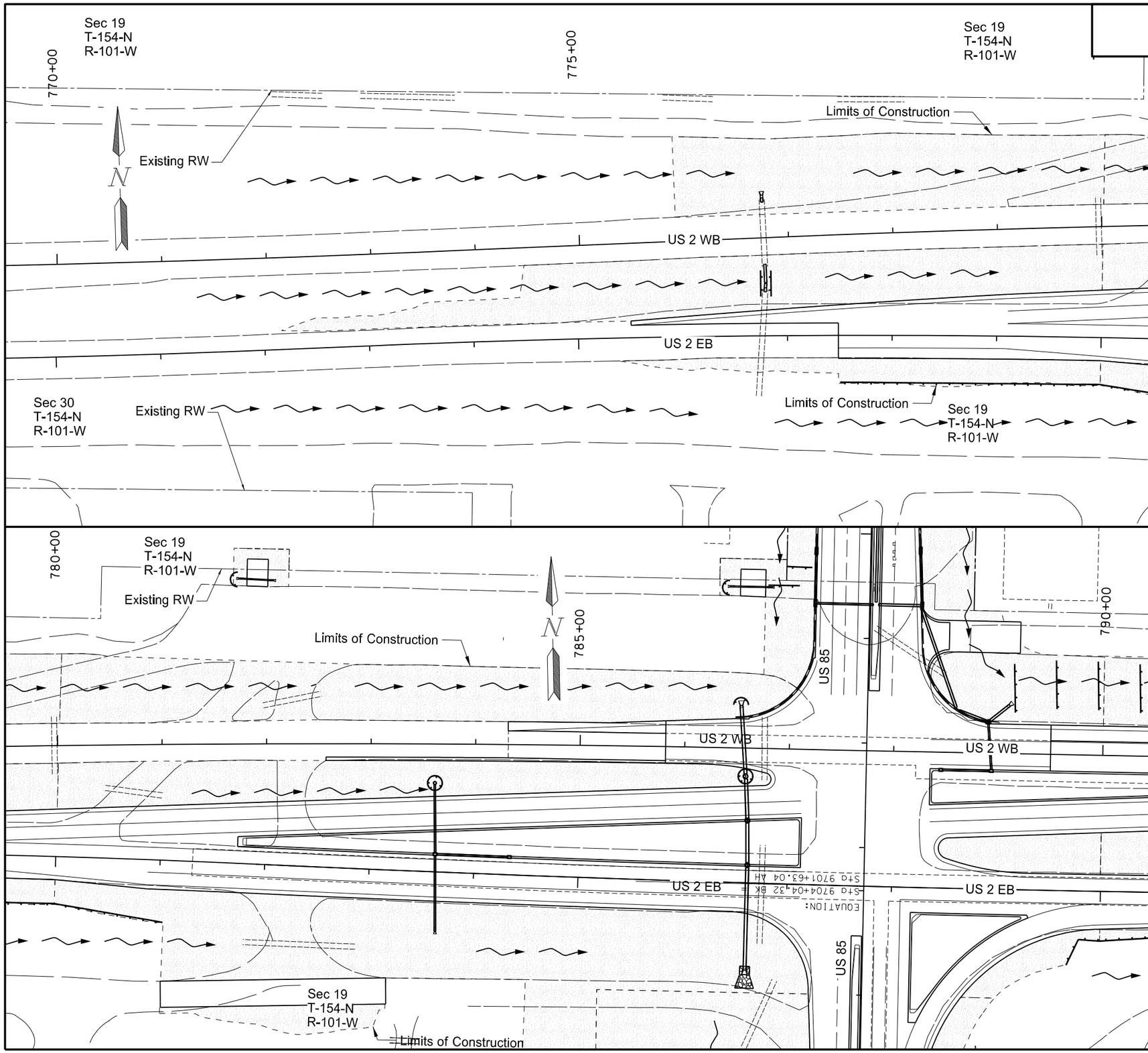

708	2260	Seeding - Type B CL IV		
		770+00 to 780+00	1.7	AC
		780+00 to 790+00	3.1	AC
		TOTAL	4.8	AC
708	5500	Mulching		
		770+00 to 780+00	1.7	AC
		780+00 to 790+00	3.1	AC
		TOTAL	4.8	AC

LEGEND

Fiber Rolls

Ditch Bottom

Seeding - Type B CL IV and Mulching

This document was originally issued and sealed by Eric Bach, Registration Number PE- 5506, on 9/12/13 and the original document is stored at the North Dakota Department of Transportation

Temporary Erosion Control & Wetlands

US 85 Intersection Improvements

US 2 / US 85
774+45.85 to 790+00

STATE	PROJECT NO.	SECTION NO.	SHEET NO.
ND	SOIA-7-085(092)183	75	4

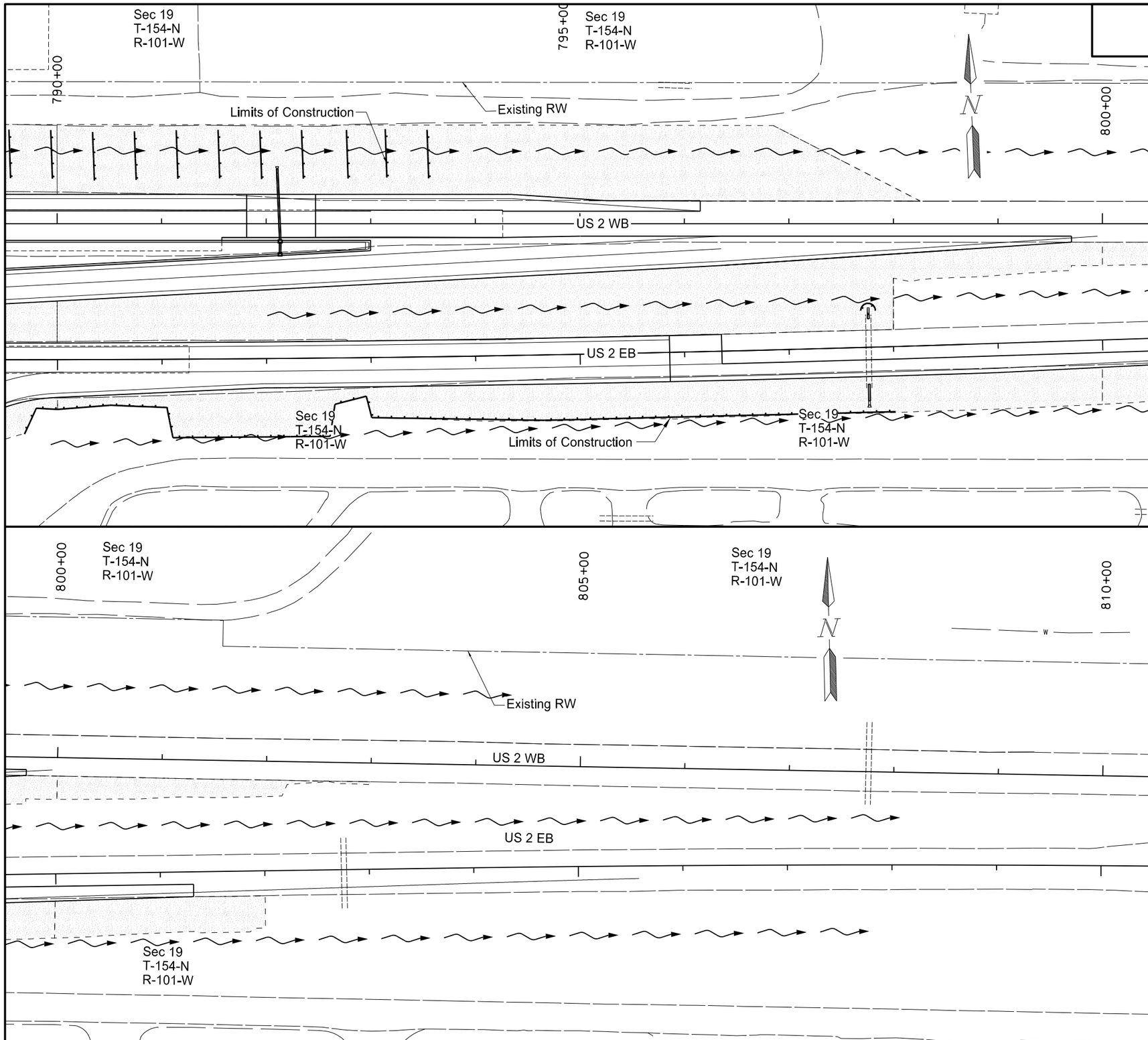

708	2260	Seeding - Type B CL IV		
		790+00 to 800+00	3.2	AC
		800+00 to 803+00	0.3	AC
		TOTAL	3.5	AC
708	5500	Mulching		
		790+00 to 798+00	3.2	AC
		800+00 to 803+00	0.3	AC
		TOTAL	3.5	AC

LEGEND

Fiber Rolls

Ditch Bottom

Seeding - Type B CL IV and Mulching

This document was originally issued and sealed by Eric Bach, Registration Number PE- 5506, on 9/12/13 and the original document is stored at the North Dakota Department of Transportation

Temporary Erosion Control & Wetlands

US 85 Intersection Improvements

US 2 / US 85
790+00 to 803+00

STATE	PROJECT NO.	SECTION NO.	SHEET NO.
ND	SOIA-7-085(092)183	75	5

TEMPORARY FIBER ROLLS

ALIGNMENT	LOCATION	FIBER ROLL 12" (LF)
US HIGHWAY 85	9692+97 LT	22
US HIGHWAY 85	9693+01 RT	22
US HIGHWAY 85	9694+03 RT	43
US HIGHWAY 85	9694+05 LT	100
US HIGHWAY 85	9694+66 RT	44
US HIGHWAY 85	9694+70 LT	100
US HIGHWAY 85	9695+36 LT	100
US HIGHWAY 85	9696+00 LT	100
US HIGHWAY 85	9696+67 LT	100
US HIGHWAY 85	9697+33 LT	120
US HIGHWAY 85	9697+43 RT	50
US HIGHWAY 85	9697+99 LT	120
US HIGHWAY 85	9698+09 RT	46
US HIGHWAY 85	9698+66 LT	120
US HIGHWAY 85	9699+32 LT	120
US HIGHWAY 85	9699+40 RT	38
US HIGHWAY 85	9699+98 LT	100
US HIGHWAY 85	9700+06 RT	30
US HIGHWAY 85	9700+68 LT	100
US HIGHWAY 85	9700+72 RT	30
US HIGHWAY 85	9701+34 LT	100
US HIGHWAY 85	9701+40 RT	50
US HIGHWAY 85	9702+04 RT	50
US HIGHWAY 85	9704+49 LT	30
US HIGHWAY 85	9705+15 LT	15
US HIGHWAY 85	9706+58 LT	44
US HIGHWAY 85	9706+66 LT	27
US HIGHWAY 85	9707+34 LT	27
US HIGHWAY 85	9707+97 LT	27
US HIGHWAY 85	9709+48 LT	24
US HIGHWAY 85	9711+46 LT	24
HWY 2 WB	776+71 RT	25
HWY 2 WB	776+81 RT	25

ALIGNMENT	LOCATION	FIBER ROLL 12" (LF)
HWY 2 WB	781+66 LT	22
HWY 2 WB	783+61 RT	44
HWY 2 WB	786+33 LT	22
HWY 2 WB	786+53 LT	22
HWY 2 WB	786+59 RT	44
HWY 2 WB	789+15 LT	47
HWY 2 WB	789+55 LT	47
HWY 2 WB	789+95 LT	47
HWY 2 WB	790+36 LT	47
HWY 2 WB	790+76 LT	47
HWY 2 WB	791+16 LT	47
HWY 2 WB	791+56 LT	47
HWY 2 WB	791+96 LT	47
HWY 2 WB	792+35 LT	47
HWY 2 WB	792+78 LT	47
HWY 2 WB	793+15 LT	47
HWY 2 WB	793+55 LT	47
HWY 2 WB	797+75 RT	22
	TOTAL	2713

ALIGNMENT	LOCATION STATION AND OFFSET	FIBER ROLL 12" (LF)
US HIGHWAY 2 EB	777+50, 45' RT - 781+05, 60' RT	353
US HIGHWAY 2 EB	781+04, 81' RT - 781+98, 79' RT	93
US HIGHWAY 2 EB	789+68, 71' RT - 789+80, 46' RT	27
US HIGHWAY 2 EB	789+79, 46' RT - 790+00, 47' RT	20
US HIGHWAY 2 EB	790+00, 48' RT - 790+50, 43' RT	50
US HIGHWAY 2 EB	790+50, 44' RT - 791+04, 46' RT	55
US HIGHWAY 2 EB	791+04, 46' RT - 791+10, 75' RT	29
US HIGHWAY 2 EB	791+10, 75' RT - 792+60, 75' RT	151
US HIGHWAY 2 EB	792+68, 75' RT - 792+65, 45' RT	31
US HIGHWAY 2 EB	792+65, 45' RT - 792+95, 35' RT	31
US HIGHWAY 2 EB	792+95, 35' RT - 793+00, 57' RT	22
US HIGHWAY 2 EB	793+15, 57' RT - 794+65, 63' RT	166
US HIGHWAY 2 EB	794+65, 63' RT - 796+07, 62' RT	143
US HIGHWAY 2 EB	796+07, 62' RT - 797+38, 59' RT	131
US HIGHWAY 2 EB	797+38, 62' RT - 798+00, 62' RT	62
US HIGHWAY 85	9705+04, 100' RT - 9711+60, 100' RT	651
	TOTAL	2015

Total, (LF) =
4728

This document was originally issued and sealed by Eric Bach, Registration Number PE- 5506, on 9/12/13 and the original document is stored at the North Dakota Department of Transportation

Temporary Erosion Control & Wetlands

US 85 Intersection Improvements

Temporary Fiber Rolls

STATE	PROJECT NO.	SECTION NO.	SHEET NO.
ND	SOIA-7-085(092)183	75	6

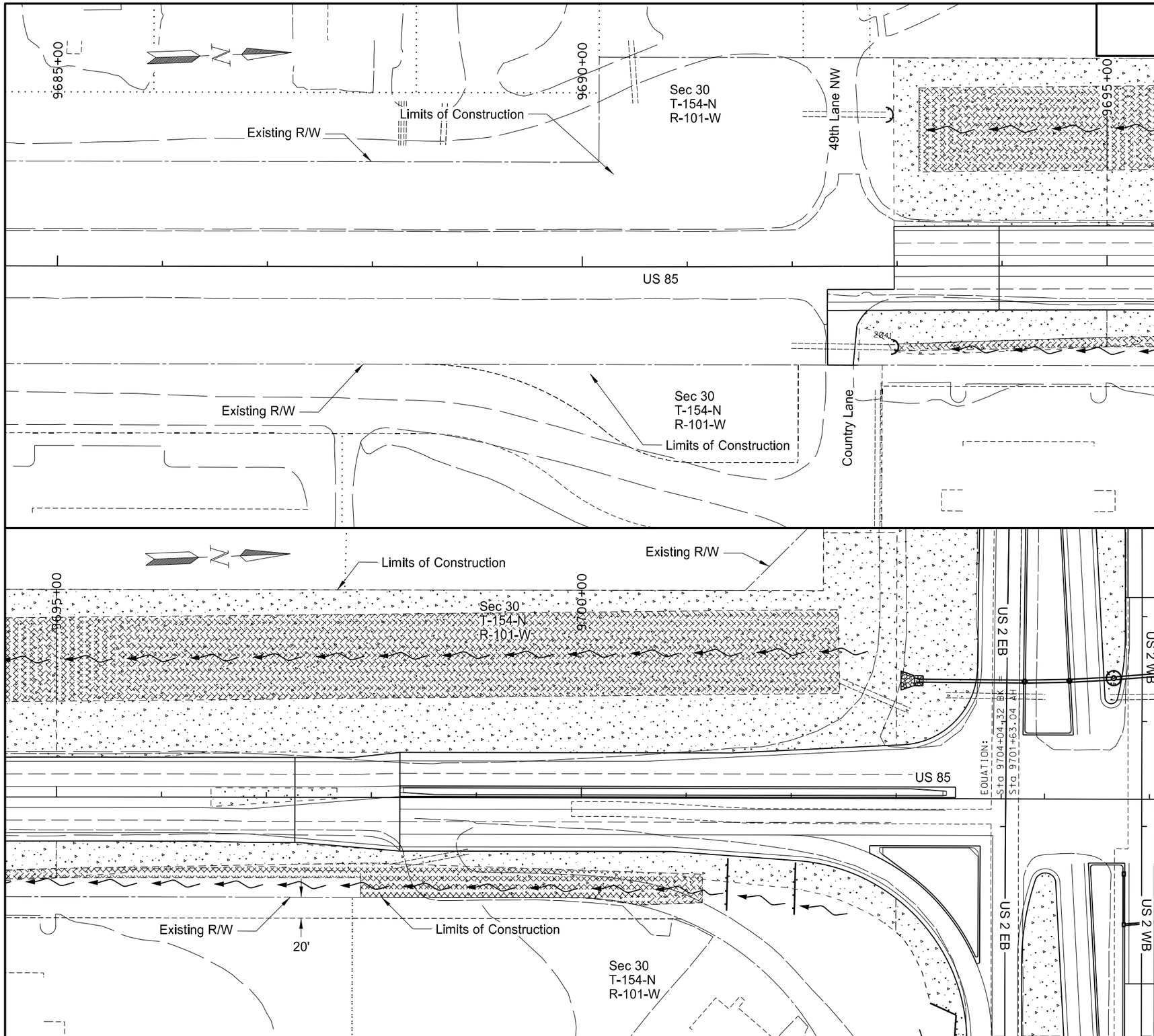

708	2240	Seeding - Type B CL II		
		9792+58.30 to 9695+00	1.0	AC
		9695+00 to 9703+00	3.6	AC
		TOTAL	4.6	AC
708	5500	Mulching		
		9792+58.30 to 9695+00	1.0	AC
		9695+00 to 9703+00	3.6	AC
		TOTAL	4.6	AC
708	5651	ECB Type 2		
		9792+58.30 to 9695+00	1763	SY
		9695+00 to 9703+00	8062	SY
		TOTAL	9825	SY

LEGEND

- Fiber Rolls
- Ditch Bottom
- Seeding - Type B CL II and Mulching
- ECB Type 2

This document was originally issued and sealed by Eric Bach, Registration Number PE- 5506, on 9/26/13 and the original document is stored at the North Dakota Department of Transportation

Permanent Erosion Control & Wetlands

US 85 Intersection Improvements

US 85
9692+33.41 to 9703+00

STATE	PROJECT NO.	SECTION NO.	SHEET NO.
ND	SOIA-7-085(092)183	75	7

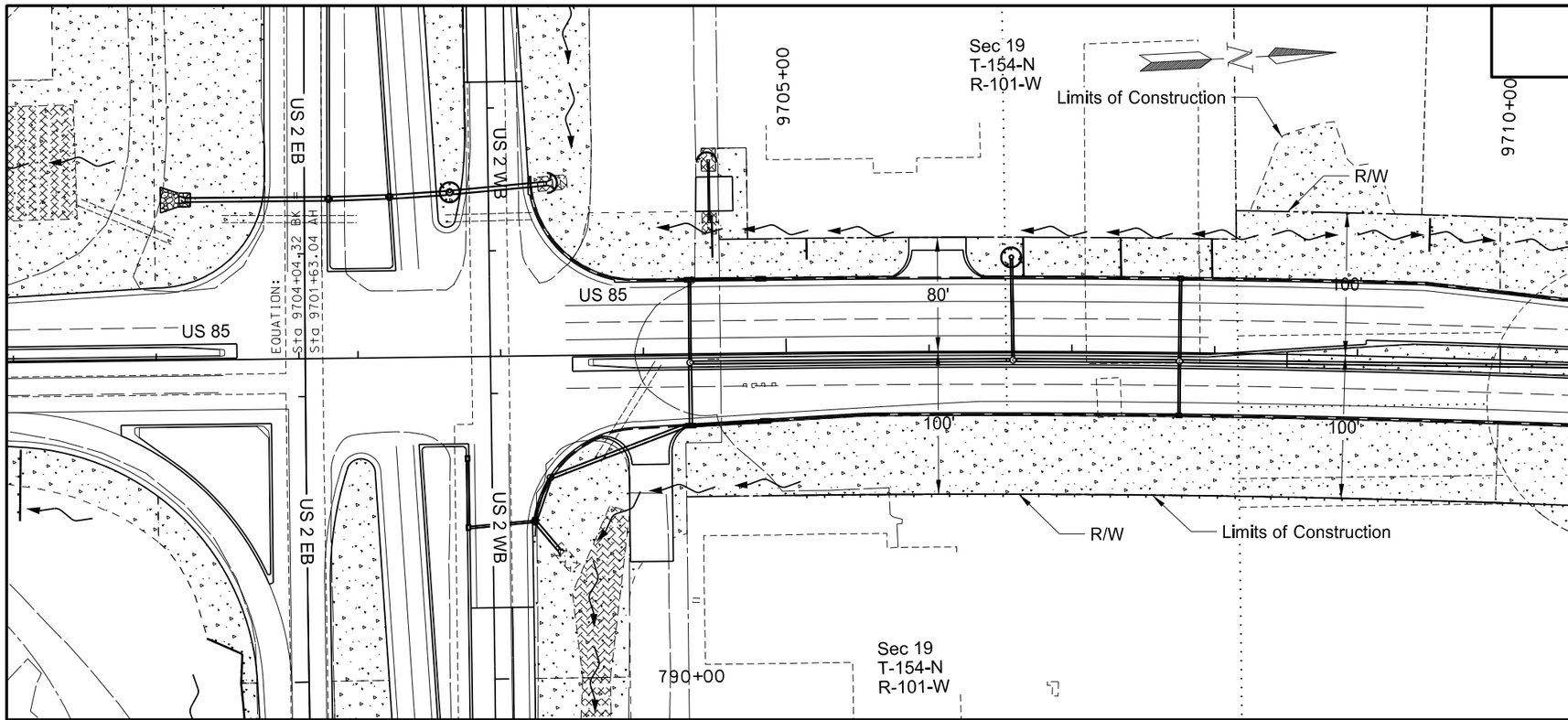

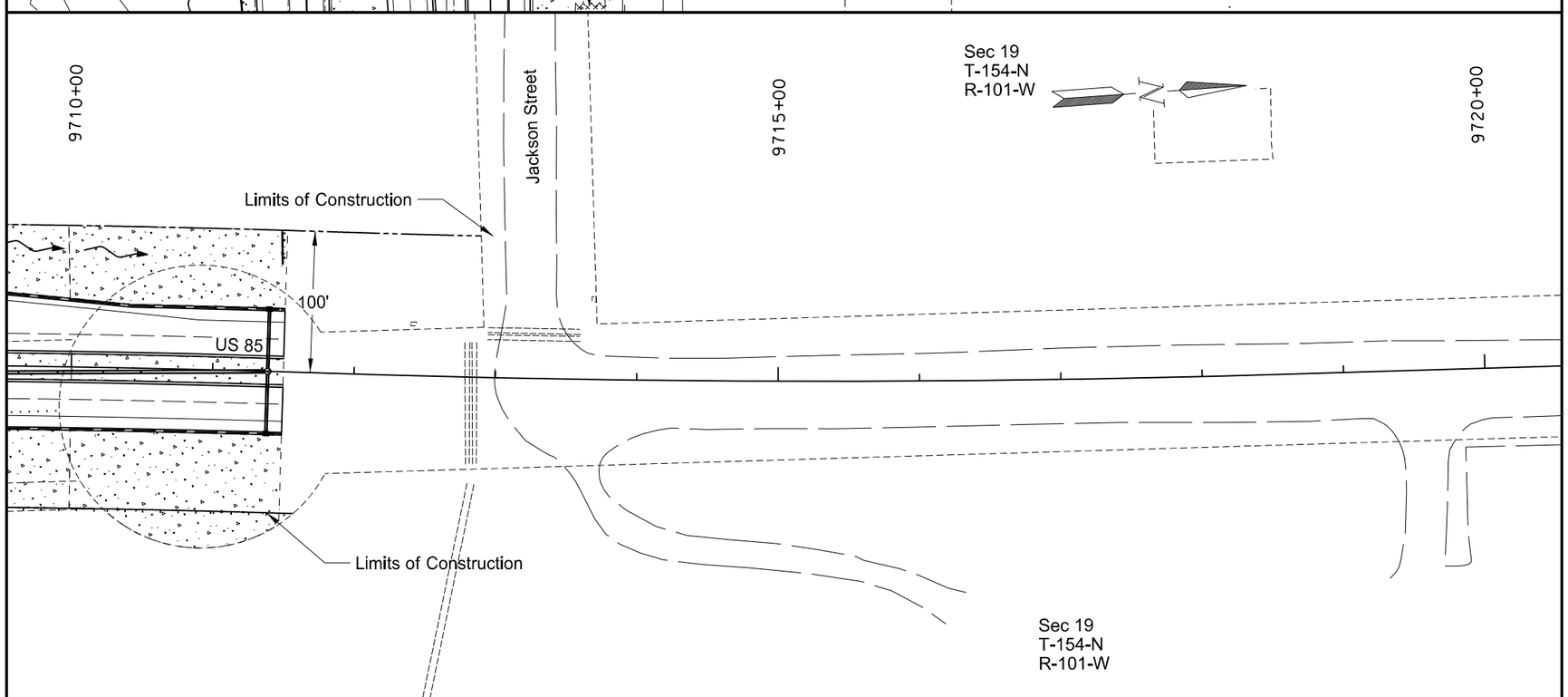

708	2240	Seeding - Type B CL II		
		9704+00 to 9710+00	1.4	AC
		9710+00 to 9713+00	0.5	AC
		TOTAL	1.9	AC
708	5500	Mulching		
		9704+00 to 9710+00	1.4	AC
		9710+00 to 9713+00	0.5	AC
		TOTAL	1.9	AC

LEGEND

- Fiber Rolls
- Ditch Bottom
- Seeding - Type B CL II and Mulching
- ECB Type 2

This document was originally issued and sealed by Eric Bach, Registration Number PE- 5506, on 9/12/13 and the original document is stored at the North Dakota Department of Transportation

Permanent Erosion Control & Wetlands

US 85 Intersection Improvements

US 85
9704+00 to 9713+06.95

STATE	PROJECT NO.	SECTION NO.	SHEET NO.
ND	SOIA-7-085(092)183	75	8

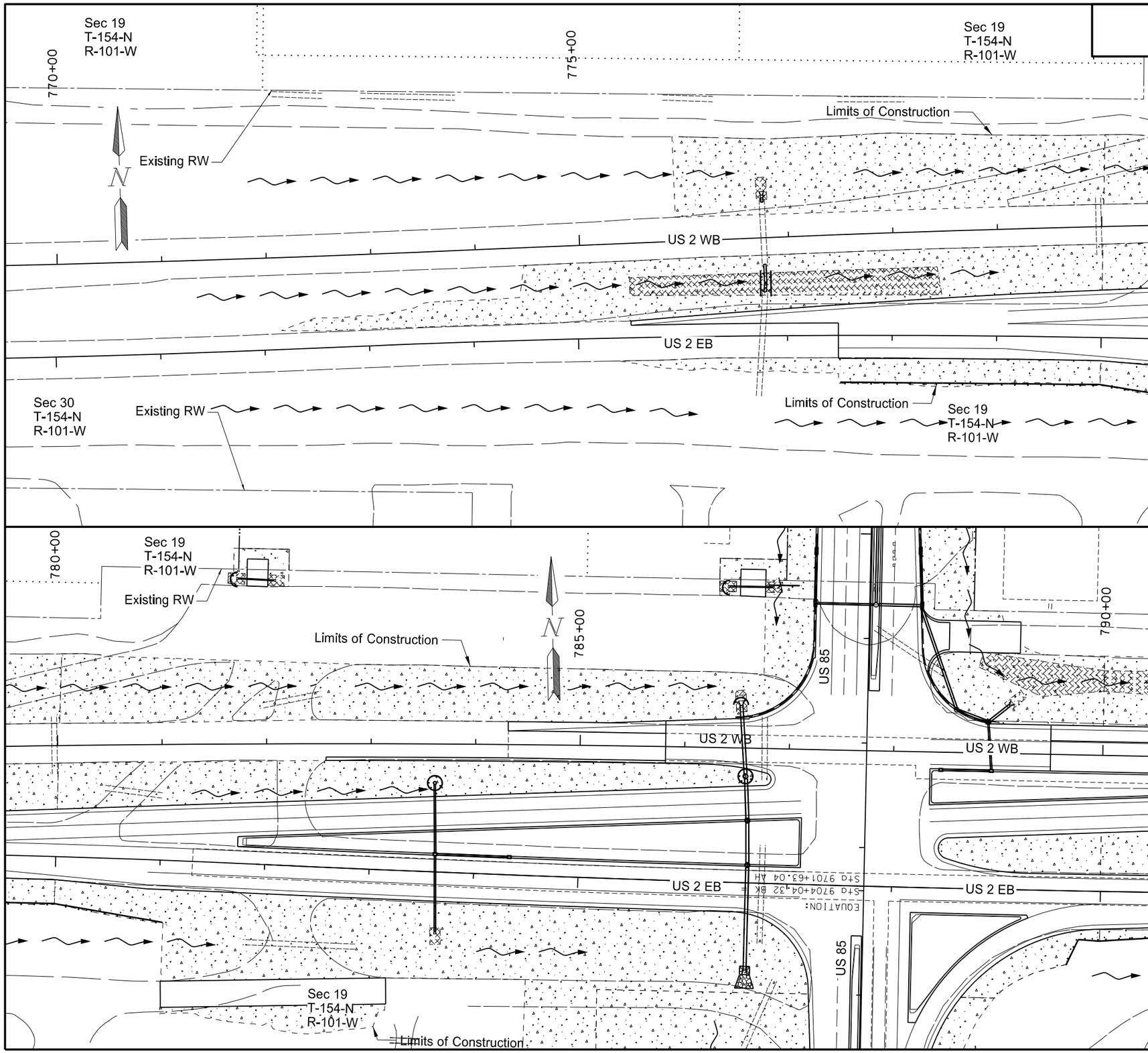

708	2240	Seeding - Type B CL II		
		774+71.41 to 780+00	1.7	AC
		780+00 to 790+00	3.1	AC
		TOTAL	4.8	AC
708	5500	Mulching		
		774+71.41 to 780+00	1.7	AC
		780+00 to 790+00	3.1	AC
		TOTAL	4.8	AC
708	5651	ECB Type 2		
		774+71.41 to 780+00	721	SY
		780+00 to 790+00	335	SY
		TOTAL	1056	SY

LEGEND

- Fiber Rolls
- Ditch Bottom
- Seeding - Type B CL II and Mulching
- ECB Type 2

This document was originally issued and sealed by Eric Bach, Registration Number PE- 5506, on 9/12/13 and the original document is stored at the North Dakota Department of Transportation

Permanent Erosion Control & Wetlands

US 85 Intersection Improvements
Private Drive
US 2 / US85
774+45.85 to 790+00

STATE	PROJECT NO.	SECTION NO.	SHEET NO.
ND	SOIA-7-085(092)183	75	9

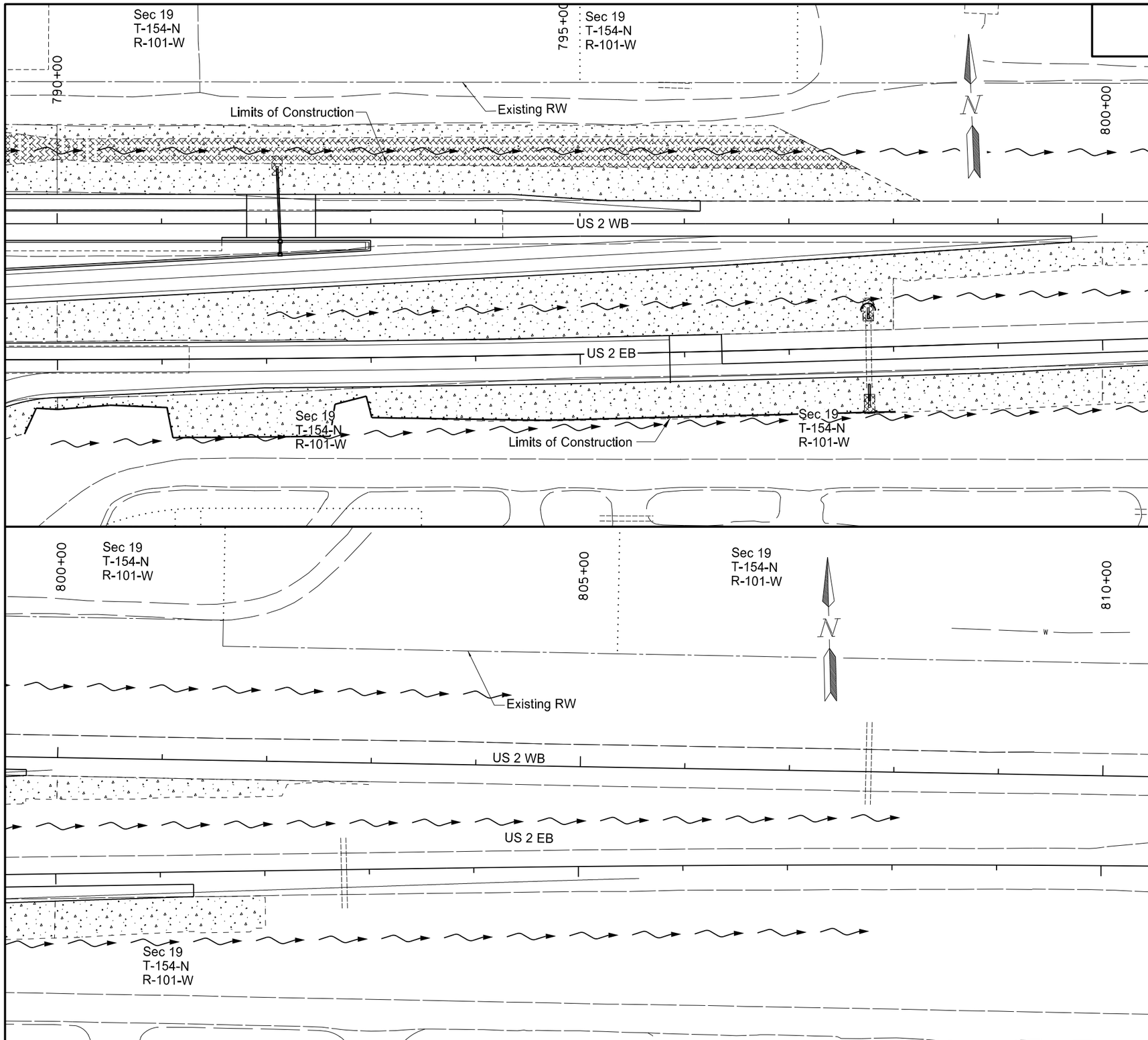

708	2240	Seeding - Type B CL II		
		790+00 to 800+00	3.2	AC
		800+00 to 803+00	0.3	AC
		TOTAL	3.5	AC
708	5500	Mulching		
		790+00 to 800+00	3.2	AC
		800+00 to 803+00	0.3	AC
		TOTAL	3.5	AC
708	5651	ECB Type 2		
		790+00 to 803+00	2179	SY
		TOTAL	2179	SY

LEGEND

- Fiber Rolls
- Ditch Bottom
- Seeding - Type B CL II and Mulching
- ECB Type 2

This document was originally issued and sealed by Eric Bach, Registration Number PE- 5506, on 9/12/13 and the original document is stored at the North Dakota Department of Transportation

Permanent Erosion Control & Wetlands

US 85 Intersection Improvements

US 2 / US 85
790+00 to 798+00

STATE	PROJECT NO.	SECTION NO.	SHEET NO.
ND	SOIA-7-085(092)183	75	10

PERMANENT FIBER ROLLS

ALIGNMENT	LOCATION	FIBER ROLL 12" (LF)
US HIGHWAY 85	9692+97 LT	22
US HIGHWAY 85	9693+01 RT	22
US HIGHWAY 85	9701+40 RT	50
US HIGHWAY 85	9702+04 RT	50
US HIGHWAY 85	9704+49 LT	30
US HIGHWAY 85	9705+15 LT	15
US HIGHWAY 85	9706+58 LT	44
US HIGHWAY 85	9706+66 LT	27
US HIGHWAY 85	9707+34 LT	27
US HIGHWAY 85	9707+97 LT	27
US HIGHWAY 85	9709+48 LT	24
US HIGHWAY 85	9711+46 LT	24
HWY 2 WB	776+71 RT	25
HWY 2 WB	776+81 RT	25
HWY 2 WB	781+66 LT	22
HWY 2 WB	783+61 RT	44
HWY 2 WB	786+33 LT	22
HWY 2 WB	786+53 LT	22
HWY 2 WB	786+59 RT	44
HWY 2 WB	797+75 RT	22
	TOTAL	588

ALIGNMENT	LOCATION STATION AND OFFSET	FIBER ROLL 12" (LF)
US HIGHWAY 2 EB	777+50, 45' RT - 781+05, 60' RT	353
US HIGHWAY 2 EB	781+04, 81' RT - 781+98, 79' RT	93
US HIGHWAY 2 EB	789+68, 71' RT - 789+80, 46' RT	27
US HIGHWAY 2 EB	789+79, 46' RT - 790+00, 47' RT	20
US HIGHWAY 2 EB	790+00, 48' RT - 790+50, 43' RT	50
US HIGHWAY 2 EB	790+50, 44' RT - 791+04, 46' RT	55
US HIGHWAY 2 EB	791+04, 46' RT - 791+10, 75' RT	29
US HIGHWAY 2 EB	791+10, 75' RT - 792+60, 75' RT	151
US HIGHWAY 2 EB	792+68, 75' RT - 792+65, 45' RT	31
US HIGHWAY 2 EB	792+65, 45' RT - 792+95, 35' RT	31
US HIGHWAY 2 EB	792+95, 35' RT - 793+00, 57' RT	22
US HIGHWAY 2 EB	793+15, 57' RT - 794+65, 63' RT	166
US HIGHWAY 2 EB	794+65, 63' RT - 796+07, 62' RT	143
US HIGHWAY 2 EB	796+07, 62' RT - 797+38, 59' RT	131
US HIGHWAY 2 EB	797+38, 62' RT - 798+00, 62' RT	62
US HIGHWAY 85	9705+04, 100' RT - 9711+60, 100' RT	651
	TOTAL	2015

Total, (LF) =
2603

This document was originally issued and sealed by Eric Bach, Registration Number PE- 5506, on 9/12/13 and the original document is stored at the North Dakota Department of Transportation

Permanent Erosion Control & Wetlands

US 85 Intersection Improvements

Permanent Fiber Rolls