NDDOT ABBREVIATIONS

D-20-1

Abn	abandoned
Abut	abutment
Ac	acres
Adj	adjusted
Aggr	aggregate
Ahd	ahead
ARV	air release valve
Align	alignment
Al	alley
Alt	alternate
Alum	aluminum
A	ampere
&	and
Appr	approach
Approx	approximate
ACP	asbestos cement pipe
Asph	asphalt
AC	asphalt cement
Assmd	assumed
@	at
Atten	attenuation
ATR	Automatic Traffic Recorder
Ave	Avenue
Avg	average
ADT	average daily traffic
Az	azimuth
Bk	back
BF	back face
Bs	backsight
Balc	balcony
B Wire	barbed wire
Barr	barricade
Btry	battery
Brg	bearing
BI	beehive inlet
Beg	begin
BM	bench mark
Bkwy	bikeway
Bit	bituminous
Blk	block
Bd Ft	board feet
BH	bore hole
BS	both sides
Bot	bottom
Blvd	Boulevard
Bndry	boundary
BC	brass cap
Brkwy	breakaway
Br	bridge
Bldg	building
BLM	Bureau of Land Management
BV	butterfly valve
Byp	bypass
C Gdrl	cable guardrail
Calc	calculate
Cd	candela
CIP	cast iron pipe
CB	catch basin
CRS	cationic rapid setting
C Gd	cattle guard
C To C	center to center
Cl or ℄	centerline
Cm	centimeter
Ch	chain
Chnlk	chain-link
Ch Blk	channel block
Ch Ch	channel change
Chk	check
Chsld	chiseled
Cir	circle
Cl	class
Cl	clay
Cl F	clay fill
Cl Hvy	clay heavy
Cl Lm	clay loam
Clnt	clean-out
Clr	clear
Cl&gr	clearing & grubbing
Co S	coal slack
Comb.	combination
Coml	commercial
Compr	compression
CADD	computer aided drafting & design
Conc	concrete
Cond	conductor
Const	construction
Cont	continuous
CSB	continuous split barrel sample
Contr	contraction
Contr	contractor
CP	control point
Coord	coordinate
Cor	corner
Corr	corrected
CAES	corrugated aluminum end section
CAP	corrugated aluminum pipe
CMES	corrugated metal end section
CMP	corrugated metal pipe
CPVCP	corrugated poly-vinyl chloride pipe
CSES	corrugated steel end section
CSP	corrugated steel pipe
C	coulomb
Co	County
Crse	course
C Gr	course gravel
CS	course sand
Ct	Court
Xarm	cross arm
Xbuck	cross buck
Xsec	cross sections
Xing	crossing
Xrd	Crossroad
Crn	crown
CF	cubic feet
M3	cubic meter
M3/s	cubic meters per second
CY	cubic yard
Cy/mi	cubic yards per mile
Culv	culvert
C&G	curb & gutter
CI	curb inlet
CR	curb ramp
CS	curve to spiral
C	cut
Dd Ld	dead load
Defl	deflection
Defm	deformed
Deg or D	degree
Dlnt	delineate
Dlntr	delineator
Depr	depression
Desc	description
Det	detail
DWP	detectable warning panel
Dtr	detour
Dia	diameter
Dir	direction
Dist	distance
DM	disturbed material
DB	ditch block
DG	ditch grade
Dbl	double
Dn	down
Dwg	drawing
Dr	drive
Drwy	driveway
DI	drop inlet
D	dry density
Ea	each
Esmt	easement
E	East
EB	Eastbound
Elast	elastomeric
EL	electric locker
E Mtr	electric meter
Elec	electric/al
EDM	electronic distance meter
Elev or El	elevation
Ellipt	elliptical
Emb	embankment
Emuls	emulsion/emulsified
ES	end section
Engr	engineer
ESS	Environmental Sensor Station
Eq	equal
Eq	equation
Evgr	evergreen
Exc	excavation
Exst	existing
Exp	expansion
Expy	Expressway
E	external of curve
Extru	extruded
FOS	factor of safety
F	Fahrenheit
FS	far side
F	farad
Fed	Federal
FHWA	Federal Highway Administration
FP	feed point
Ft	feet/foot
Fn	fence
Fn P	fence post
FO	fiber optic
FB	field book
FD	field drive
F	fill
FAA	fine aggregate angularity
FS	fine sand
FH	fire hydrant
Fl	flange
Flrd	flared
FES	flared end section

NORTH DAKOTA DEPARTMENT OF TRANSPORTATION	
06-15-10	
REVISIONS	
DATE	CHANGE
04-20-11	Added Items
03-15-13	Added Items

This document was originally issued and sealed by Roger Weigel, Registration Number PE-2930, on 3/15/13 and the original document is stored at the North Dakota Department of Transportation

NDDOT ABBREVIATIONS

D-20-2

F Bcn	flashing beacon
FA	flight auger sample
FL	flow line
Ftg	footing
FM	force main
Fs	foresight
Fnd	found
Fdn	foundation
Frac	fractional
Frwy	freeway
Frt	front
FF	front face
F Disp	fuel dispenser
FFP	fuel filler pipes
FLS	fuel leak sensor
Furn	furnish/ed
Gal	gallon
Galv	galvanized
Gar	garage
Gs L	gas line
G Reg	gas line regulator
GMV	gas main valve
G Mtr	gas meter
GSV	gas service valve
GVP	gas vent pipe
GV	gate valve
Ga	gauge
Geod	geodetic
GIS	Geographical Information System
G	giga
GPS	Global Positioning System
Gov	government
Grd	graded/grade
Gr	gravel
Grnd	ground
GWM	ground water monitor
Gdrl	guardrail
Gtr	gutter
H Plg	H piling
Hdwl	headwall
Ha	hectare
Ht	height
HI	height of instrument
Hel	helical
H	henry
Hz	hertz
HDPE	High Density Polyethylene
HM	high mast
HP	high pressure
HPS	high pressure sodium
Hwy	highway
Hor	horizontal
HBP	hot bituminous pavement
Hr	hour(s)
Hyd	hydrant
Ph	hydrogen ion content
Id	identification
In or "	inch
Incl	inclinometer tube
IMH	inlet manhole
ID	inside diameter
Inst	instrument
Intchg	interchange
Intmdt	intermediate
Intscn	intersection
Inv	invert
IM	iron monument
I Pn	Iron Pin
IP	iron Pipe
Jt	joint
J	joule
Jct	junction
K	kelvin
Kn	kilo newton
Kpa	kilo pascal
Kg	kilogram
Kg/m3	kilogram per cubic meter
Km	kilometer
K	Kip(s)
LS	Land Surveyor (licensed)
LSIT	Land Surveyor In Training
Ln	lane
Lg	large
Lat	latitude
Lt	left
L	length of curve
Lens	lenses
Lvl	level
LB	level book
Lvlng	leveling
Lht	light
LP	light pole
Ltg	lighting
Lig Co	lignite coal
Lig Sl	lignite slack
LF	linear foot
Liq	liquid
LL	liquid limit
L	litre
Lm	loam
Loc	location
LC	long chord
Long.	longitude
Lp	loop
LD	loop detector
Lm	lumen
Lum	luminaire
L Sum	lump sum
Lx	lux
ML	main line
M Hr	man hour
MH	manhole
Mkd	marked
Mkr	marker
Mkg	marking
MA	mast arm
Matl	material
Max	maximum
MC	meander corner
Meas	measure
Mdn	median
MD	median drain
MC	medium curing
M	mega
Mer	meridian
M	meter
M/s	meters per second
M	mid ordinate of curve
Mi	mile
MM	mile marker
MP	mile post
Ml	milliliter
Mm	millimeter
Mm/hr	millimeters per hour
Min	minimum
Misc	miscellaneous
Mon	monument
Mnd	mound
Mtbl	mountable
Mtd	mounted
Mtg	mounting
Mk	muck
Mun	municipal
N	nano
NGS	National Geodetic Survey
NS	near side
Neop	neoprene
Ntwk	network
N	newton
N	North
NDDOT	North Dakota Department of Transportation
NE	North East
NW	North West
NB	Northbound
No. or #	number
Obsc	obscure(d)
Obsn	observation
Ocpd	occupied
Ocpy	occupy
Off Loc	office location
O/s	offset
OC	on center
C	one dimensional consolidation
OC	organic content
Orig	original
O To O	out to out
OD	outside diameter
OH	overhead
PMT	pad mounted transformer
Pg	pages
Pntd	painted
Pr	pair
Pnl	panel
Pk	park
PK	Parker-Kalon nail
Pa	pascal
PSD	passing sight distance
Pvmt	pavement
Ped	pedestal
Ped	pedestrian
PPP	pedestrian pushbutton post
Pen.	penetration
Perf	perforated
Per.	perimeter
PL	pipeline
Pl	place
P&P	plan & profile
PL	plastic limit
Pl	plate
Pt	point
PCC	point of compound curve
PC	point of curve
PI	point of intersection
PRC	point of reverse curvature

NORTH DAKOTA
DEPARTMENT OF TRANSPORTATION

06-15-10

REVISIONS

DATE	CHANGE
04-20-11	Added Items
03-15-13	Added Items

This document was originally issued and sealed by Roger Weigel, Registration Number PE-2930, on 3/15/13 and the original document is stored at the North Dakota Department of Transportation

NDDOT ABBREVIATIONS

D-20-3

PT	point of tangent
POC	point on curve
POT	point on tangent
PE	polyethylene
PVC	polyvinyl chloride
PCC	Portland Cement concrete
Lb or #	pounds
PP	power pole
Preempt	preemption
Prefab	prefabricated
Prfmd	preformed
Prep	preperation
Press.	pressure
PRV	pressure relief valve
Prestr	prestressed
Pvt	private
PD	private drive
Prod.	production/produce
Prog	programmed
Prop.	property
Prop Ln	property line
Ppsd	proposed
PB	pull box
Qty	quantity
Qtr	quarter
Rad or R	radius
RR	railroad
Rlwy	railway
Rsd	raised
RTP	random traverse point
Rge or R	range
RC	rapid curing
Rec	record
Rcy	recycle
RPCC	recycled Portland cement concrete
Ref	reference
R Mkr	reference marker
RM	reference monument
Refl	reflectorized
RCB	reinforced concrete box
RCES	reinforced concrete end section
RCP	reinforced concrete pipe
RCPS	reinforced concrete pipe sewer
Reinf	reinforcement
Res	reservation
Ret	retaining
Rev	reverse
Rt	right
R/W	right of way
Riv	river
Rd	road
Rdbd	road bed
Rdwy	roadway
RWIS	Roadway Weather Information System
Rk	rock
Rt	route
Salv	salvage(d)
Sd	sand
Sdy Cl	sandy clay
Sdy Cl Lm	sandy clay loam
Sdy Fl	sandy fill
Sdy Lm	sandy loam
San	sanitary sewer line
Sc	scoria
Sec	seconds
Sec	section
SL	section line
Sep	separation
Seq	sequence
Serv	service
Sh	shale
Sht	sheet
Shtng	sheeting
Shldr	shoulder
Sw	sidewalk
S	siemens
SD	sight distance
Sig	signal
Si Cl	silt clay
Si Cl Lm	silty clay loam
Si Lm	silty loam
Sgl	single
SC	slow curing
SS	slow setting
Sm	small
S	South
SE	South East
SW	South West
SB	Southbound
Sp	spaces
Spcl	special
SP	special provisions
G	specific gravity
Spk	spike
SC	spiral to curve
ST	spiral to tangent
SB	split barrel sample
SH	sprinkler head
SV	sprinkler valve
Sq	square
SF	square feet
Km2	square kilometer
M2	square meter
SY	square yard
Stk	stake
Std	standard
N	standard penetration test
Std Specs	Standard Specifications
Sta	station
Sta Yd	station yards
Stm L	steam line
SEC	steel encased concrete
SSD	stopping sight distance
SD	storm drain
St	street
SPP	structural plate pipe
SPPA	structural plate pipe arch
Str	structure
Subd	subdivision
Sub	subgrade
Sub Prep	subgrade preperation
Ss	subsoil
SE	superelevation
SS	supplement specification
Supp	supplemental
Surf	surfacing
Surv	survey
Sym	symmetrical
SI	Systems International
Tan	tangent
T	tangent (semi)
TS	tangent to spiral
Tel	telephone
Tel B	Telephone Booth
Tel P	telephone pole
Tv	television
Temp	temperature
Temp	temporary
TBM	temporary bench mark
T	tesla
T	thinwall tube sample
T/mi	tons per mile
Ts	topsoil
Twp or T	township
Traf	traffic
TSCB	traffic signal control box
Tr	trail
Transf	transformer
TB	transit book
Trans	transition
TT	transmission tower
Trans	transverse
Trav	traverse
TP	traverse point
Trtd	treated
Trmt	treatment
Qc	triaxial compression
TERO	Tribal Employment Rights Ordinance
Tpl	triple
TP	turning point
Typ	typical
Qu	unconfined compressive strength
Ugrnd	underground
USC&G	US Coast & Geodetic Survey
USGS	US Geologic Survey
Util	utility
VG	valley gutter
Vap	vapor
Vert	vertical
VC	vertical curve
VCP	vitrified clay pipe
V	volt
Vol	volume
Wkwy	walkway
W	water content
WGV	water gate valve
WL	water line
WM	water main
WMV	water main valve
W Mtr	water meter
WSV	water service valve
WW	water well
W	watt
Wrng	wearing
Wb	weber
WIM	weigh in motion
W	West
WB	Westbound
Wrng	wiring
W/	with
W/o	without
WC	witness corner
WGS	World Geodetic System
Z	zenith

NORTH DAKOTA
DEPARTMENT OF TRANSPORTATION

06-15-10

REVISIONS

DATE	CHANGE
04-20-11	Added Items
03-15-13	Added Items

This document was originally issued and sealed by Roger Weigel, Registration Number PE-2930, on 3/15/13 and the original document is stored at the North Dakota Department of Transportation

NDDOT UTILITY COMPANY ABBREVIATIONS

D-20-10

702COM	702 Communications
ACCENT	Accent Communications
AGASSIZ WU	Agassiz Water Users Incorporated
All PI	Alliance Pipeline
ALL SEAS WU	All Seasons Water Users Association
AMOCO PI	Amoco Pipeline Company
AMRDA HESS	Amerada Hess Corporation
AT&T	AT&T Corporation
B PAW	Bear Paw Energy Incorporated
BASIN ELEC	Basin Electric Cooperative Incorporated
BEK TEL	Bek Communications Cooperative
BELLE PL	Belle Fourche Pipeline Company
BNSF	Burlington Northern Santa Fe Railway
BOEING	Boeing
BRNS RWD	Barnes Rural Water District
BURK-DIV ELEC	Burke-Divide Electric Cooperative
BURL WU	Burleigh Water Users
Cable One	Cable One
CABLE SERV	Cable Services
CAP ELEC	Capital Electric Cooperative Incorporat
CASS CO ELEC	Cass County Electric Cooperative
CASS RWU	Cass Rural Water Users Incorporated
CAV ELEC	Cavalier Rural Electric Cooperative
CBLCOM	Cablecom Of Fargo
CENEX PL	Cenex Pipeline
CENT PWR ELEC	Central Power Electric Cooperative
CONS TEL	Consolidated Telephone
CONT RES	Continental Resource Inc
CPR	Canadian Pacific Railway
D O E	Department Of Energy
DAK CARR	Dakota Carrier Network
DAK CENT TEL	Dakota Central Telephone
DAK RWD	Dakota Rural Water District
DGC	Dakota Gasification Company
DICKEY R NET	Dickey Rural Networks
DICKEY RWU	Dickey Rural Water Users Association
DICKEY TEL	Dickey Telephone
DNRR	Dakota Northern Railroad
DOME PL	Dome Pipeline Company
DVELEC	Dakota Valley Electric Cooperative
DVMW	Dakota, Missouri Valley & Western
ENBRDG	Enbridge Pipelines Incorporated
FALK MNG	Falkirk Mining Company
G FKS-TRL WD	Grand Forks-traill Water District
GETTY TRD & TRAN	Getty Trading & Transportation
GLDN W ELEC	Golden West Electric Cooperative
GRGS CO TEL	Griggs County Telephone
GT PLNS NAT GAS	Great Plains Natural Gas Company
HALS TEL	Halstad Telephone Company
INT-COMM TEL	Inter-Community Telephone Company
KANEB PL	Kaneb Pipeline Company
KEM ELEC	Kem Electric Cooperative Incorporated
KOCH GATH SYS	Koch Gathering Systems Incorporated
LKHD PL	Lakehead Pipeline Company
LNGDN RWU	Langdon Rural Water Users Incorporated
LWR YELL R ELEC	Lower Yellowstone Rural Electric
MCKNZ CON	McKenzie Consolidated Telcom
MCKNZ WRD	McKenzie County Water Resource District
MCKNZ ELEC	McKenzie Electric Cooperative
MCLEOD	Mcleod USA
MCLN ELEC	Mclean Electric Cooperative
MCLN-SHRDN R WAT	Mclean-Sheridan Rural Water
MDU	Montana-dakota Utilities
MID-CONT CABLE	Mid-Continent Cable
MIDSTATE TEL	Midstate Telephone Company
MINOT CABLE	Minot Cable Television
MINOT TEL	Minot Telephone Company
MISS W W S	Missouri West Water System
MNKOTA PWR	Minnkota Power
MRE LBTY TEL	Moore & Liberty Telephone
MOR-GRAN-SOU ELEC	Mor-gran-sou Electric Cooperative
MOUNT-WILLI ELEC	Mountrail-williams Electric Cooperative
MUNICIPAL	City Of '.....'
MUNICIPAL	City Water And Sewer
N CENT ELEC	North Central Electric Cooperative
N VALL W DIST	North Valley Water District
ND PKS & REC	North Dakota Parks And Recreation
ND TEL	North Dakota Telephone Company
NDDOT	North Dakota Department of Transportation
NDSU SOIL SCI DEPT	Ndsu Soil Science Department
NEMONT TEL	Nemont Telephone
NODAK R ELEC	Nodak Rural Electric Cooperative
NOON FRMS TEL	Noonan Farmers Telephone Company
NPR	Northern Plains Railroad
NSP	Northern States Power
NTH PRAIR RW	Northern Prairie Rural Water Association
NTHN BRDR PL	Northern Border Pipeline
NTHN PLNS ELEC	Northern Plains Electric Cooperative Incorporated
NTHWSTRN REF	Northwestern Refinery Company
NW COMM	Northwest Communication Cooperation
OTTR TL PWR	Otter Tail Power Company
P L E M	Prairielands Energy Marketing
POLAR COM	Polar Communications
QWEST	Qwest Communications
R&T W SUPPLY	R & T Water Supply Association
RAMSEY R SEW	Ramsey Rural Sewer Association
RAMSEY RW	Ramsey Rural Water Association
RAMSEY UTIL	Ramsey County Rural Utilities
RED RIV TEL	Red River Rural Telephone
RESVTN TEL	Reservation Telephone
ROBRTS TEL	Roberts Company Telephone
R-RIDER ELEC	Roughrider Electric Coop
RRVW	Red River Valley & Western Railroad
RSR ELEC	R.S.R. Electric Cooperative
S E W U	South East Water Users Incorporated
SCOTT CABLE	Scott Cable Television Dickinson
SHERDN ELEC	Sheridan Electric Cooperative
SHEYN VLY ELEC	Sheyenne Valley Electric Cooperative
SKYTECH	Skyland Technologies Incorporated
SLOPE ELEC	Slope Electric Cooperative
SLOPE ELEC	Slope Electric Cooperative Incorporated
SOURIS RIV TELCOM	Souris River Telecommunications
ST WAT COMM	State Water Commission
STATE LN WATER	State Line Water Cooperative
STUT RWU	Stutsman Rural Water Users
T M C	Turtle Mountain Communications
TCI	TCI of North Dakota
TRI-CNTY WU	Tri-County Water Users Incorporated
TRL CO RWU	Traill County Rural Water Users
UNTD TEL	United Telephone
UPPR SOUR WUA	Upper Souris Water Users Association
US SPRINT	U.S. Sprint
USAF MSL CABLE	U.S.A.F. Missile Cable
USW COMM	U.S. West Communications
VRNDRY ELEC	Verendrye Electric Cooperative
W RIV TEL	West River Telephone Incorporated
WEB	W. E. B. Water Development Association
WILLI RWA	Williams Rural Water Association
WILSTN BAS PL	Williston Basin Interstate Pipeline Company
WLSH RWD	Walsh Water Rural Water District
WOLVRTN TEL	Wolverton Telephone
XLENER	Xcel Energy
YSVR	Yellowstone Valley Railroad

NORTH DAKOTA
DEPARTMENT OF TRANSPORTATION

6-15-10

REVISIONS

DATE	CHANGE
04-20-11	Added Items
03-15-13	Added Items

This document was originally issued and sealed by Roger Weigel, Registration Number PE-2930, on 3/15/13 and the original document is stored at the North Dakota Department of Transportation

Line Styles

D-20-20

- Limits of Const Transition Line
- Bale Check
- Rock Check
- Sight Distance Triangle Line
- Small Hidden Object
- Dimension Leader
- Existing Ground
- Existing Topsoil (Cross Section View)
- Large Hidden Object
- Edge Drain
- D — Geotextile Fabric Type D
- E — Existing Electrical
- FO — Existing Fiber Optic Line
- FO — Existing TV Fiber Optic
- G — Existing Gas Pipe
- Geo — Geogrid
- OH — Existing Overhead Utility Line
- P — Existing Power
- PL — Existing Fuel Pipeline
- PL — Existing Undefined Above Ground Pipe Line
- R — Geotextile Fabric Type R
- R — Geotextile Fabric Type R1
- REMOVE — Remove Line
- RR — Geotextile Fabric Type RR
- S — Geotextile Fabric Type S
- S — Floating Silt Curtain
- T — Existing Telephone Line
- TV — Existing TV Line
- Void — Existing Assumed Ground (Not Surveyed)
- Void — Tentative Ground Line
- W — Existing Water or Steam Line
- Existing Under Drain
- Under Drain
- Wall
- Existing Slotted Drain
- Existing Cemetary Boundary
- Centerline Pavement Marking
- Barrier with Centerline Pavement Marking
- Barrier Pavement Marking
- Stripe 4 IN Dotted Extension White
- Stripe 8 IN Dotted Extension White
- Stripe 8 IN Lane Drop
- Wetland Mitigation
- Existing Box Culvert Bridge
- Existing Concrete Surface
- Existing Drainage Structure
- Easement
- Existing Concrete
- Existing Easement
- Existing Gravel Surface
- Existing Aggregate (Cross Section View)
- Existing Curb and Gutter (Cross Section View)
- Existing Riprap
- Existing Underground Vault or Lift Station
- Tangent Line
- Hidden Object
- Existing Dirt Surface
- Existing Conduit
- Topsoil Profile
- Existing Conductor
- Conductor
- Fiber Optic
- Existing Loop Detector
- Subgrade, Subcut or Ditch Grade
- Existing Asphalt Surface
- Existing Asphalt (Cross Section View)
- Existing Reinforcement Rebar
- Existing Tie Point Line
- Existing State or International Line
- Existing Quarter Section Line
- Existing County
- Existing Section Line
- Existing Township
- Existing Railroad Centerline
- Centerline
- Existing Centerline
- Supplemental Contour
- Right of Way
- Existing Right of Way
- Existing Right of Way Railroad
- Failure Line
- Existing Conditions
- Existing Ground (Details)
- Existing Sixteenth Section Line
- Existing Right of Way Not State Owned
- Phantom Object
- Centerline Main
- Existing Guardrail Cable
- Existing Guardrail Metal
- Existing Edge of Water
- Excavation Limits
- Existing Government Lot Line
- Existing Adjacent Block Lines
- Existing Adjacent Lot Lines
- Existing Adjacent Property Line
- Existing Adjacent Subdivision Lines

NORTH DAKOTA DEPARTMENT OF TRANSPORTATION	
4-20-11	
REVISIONS	
DATE	CHANGE

This document was originally issued and sealed by Roger Weigel, Registration Number PE- 2930, on 4/20/11 and the original document is stored at the North Dakota Department of Transportation

D-20-21

Line Styles

- Subgrade Reinforcement
- Existing Down Guy Wire Down Guy
- Existing Fence
- Existing Railroad
- Existing Sanitary Sewer
- Existing Sanitary Force Main
- Existing Storm Drain
- Existing Storm Drain Force Main
- Fence
- Silt Fence
- Existing Field Line
- Exst Flow
- Flow
- Existing Culvert
- Existing Curb
- Existing Valley Gutter
- Existing Driveway Gutter
- Existing Curb and Gutter
- Existing Mountable Curb and Gutter
- Existing Double Micro Loop Detector
- Micro Loop Detector Double
- Existing Overhead Sign Structure
- Existing Micro Loop Detector
- Micro Loop Detector
- Existing Overhead Sign Structure Cantilever
- Existing Railroad Switch
- Overhead Sign Structure Cantilever
- 24 Inch Pipe
- Reinforced Concrete Pipe
- Signal Head with Mast Arm
- Existing Signal Head with Mast Arm
- Tie Bar at Random Spacing
- 3-Cable w Posts
- Existing 3-Cable w Posts
- Site Boundary
- Fiber Rolls
- Doweled Joint
- Tie Bar 30 Inch 4 Foot Center to Center
- Tie Bar 18 Inch 3 Foot Center to Center
- Existing Berm, Dike, Pit, or Earth Dam
- Existing Ditch Block
- Depression Contours
- Existing City Corporate Limits or Reservation Boundary
- Gravel Pit - Borrow Area
- Existing Tree Boundary
- Tree Row
- Existing Brush or Shrub Boundary
- Existing Retaining Wall
- Existing Planter or Wall
- Retaining Wall (Plan View)
- Sheet Piling
- W-Beam w Posts
- Existing W-Beam Guardrail with Posts
- Exst Wet Area-Vegetation Break
- Existing Wetland Delineated

NORTH DAKOTA DEPARTMENT OF TRANSPORTATION	
4-20-11	
REVISIONS	
DATE	CHANGE

This document was originally issued and sealed by Roger Weigel, Registration Number PE- 2930, on 4/20/11 and the original document is stored at the North Dakota Department of Transportation

Symbols

D-20-30

- North Arrow (Half Scale)
- Truck Mounted Attenuator
- Type I Barricade
- Type II Barricade
- Type III Barricade
- Catch Basin
- Cairn or Stone Circle
- Video Detection Camera
- Storm Drain Cap or Stub
- Corrugated Metal End Section 18 Inch
- Corrugated Metal End Section 24 Inch
- Corrugated Metal End Section 30 Inch
- Corrugated Metal End Section 36 Inch
- Corrugated Metal End Section 42 Inch
- Corrugated Metal End Section 48 Inch
- Concrete Foundation
- Ground Connection Conductor
- Neutral Connection Conductor
- Phase 1 Connection Conductor
- Phase 2 Connection Conductor
- Traffic Cone
- Signal Controller
- Pad Mounted Signal Controller
- Alignment Data Point
- Emergency Vehicle Detector
- Attenuation Device
- Diamond Grade Delineator Type A
- Diamond Grade Delineator Type B
- Diamond Grade Delineator Type C
- Diamond Grade Delineator Type D
- Diamond Grade Delineator Type E
- Flexible Delineator
- Flexible Delineator Type A
- Flexible Delineator Type B
- Flexible Delineator Type C
- Flexible Delineator Type D
- Flexible Delineator Type E
- Delineator Type A
- Delineator Type A Reset
- Delineator Type B
- Delineator Type B Reset
- Delineator Type C
- Delineator Type D
- Delineator Type E
- Delineator Drums
- Spot Elevation
- Existing Access Control Arrow
- Existing Artifact
- Existing Flashing Beacon
- Existing Benchmark
- Existing Railroad Battery Box
- Existing Bush or Shrub
- Existing Gas Cap or Stub
- Existing Sanitary Cap or Stub
- Existing Storm Drain Cap or Stub
- Existing Water Cap or Stub
- Existing Sanitary Cleanout
- Existing Concrete Foundation
- Existing Traffic Signal Controller
- Existing Pad Mounted Signal Controller
- Existing Sixteenth Section Corner
- Existing Quarter Section Corner
- Existing Section Corner
- Existing Railroad Crossbuck
- Existing Satellite Dish
- Existing Fuel Dispensers
- Existing Flexible Delineator Type A
- Existing Flexible Delineator Type B
- Existing Flexible Delineator Type C
- Existing Flexible Delineator Type D
- Existing Flexible Delineator Type E
- Existing Delineator Type A
- Existing Delineator Type B
- Existing Delineator Type C
- Existing Delineator Type D
- Existing Delineator Type E
- Existing EFB Misc
- Existing Flashing Beacon
- Existing Pipe Mounted Flasher
- Existing Pad Mounted Feed Point
- Existing Pipe Mounted Feed Point with Pad
- Existing Pole Mounted Feed Point
- Existing Railroad Frog
- Existing Snow Gate 18
- Existing Snow Gate 28
- Existing Snow Gate 40
- Existing Headwall
- Existing Pedestrian Head with Number
- Existing Signal Head
- Existing Sprinkler Head
- Existing Fire Hydrant
- Existing Catch Basin Drop Inlet
- Existing Curb Inlet
- Existing Manhole Inlet
- Existing Junction Box

NORTH DAKOTA DEPARTMENT OF TRANSPORTATION	
4-20-11	
REVISIONS	
DATE	CHANGE

This document was originally issued and sealed by Roger Weigel, Registration Number PE-2930, on 4/20/11 and the original document is stored at the North Dakota Department of Transportation

Symbols

D-20-31

- Existing Light Standard
- Existing High Mast Light Standard 10 Luminaire
- Existing High Mast Light Standard 3 Luminaire
- Existing High Mast Light Standard 4 Luminaire
- Existing High Mast Light Standard 5 Luminaire
- Existing High Mast Light Standard 6 Luminaire
- Existing High Mast Light Standard 7 Luminaire
- Existing High Mast Light Standard 8 Luminaire
- Existing High Mast Light Standard 9 Luminaire
- Existing Overhead Sign Structure Load Center
- Existing Luminaire
- Existing Light Standard Luminaire
- Existing Federal Mailbox
- Existing Private Mailbox
- Existing Meander Section Corner
- Existing Meter
- Existing Electrical Manhole
- Existing Gas Manhole
- Existing Sanitary Manhole
- Existing Sanitary Force Main Manhole
- Existing Sanitary Manhole with Valve
- Existing Storm Drain Manhole
- Existing Force Main Storm Drain Manhole
- Existing Force Main Storm Drain Manhole with Valve
- Existing Telephone Manhole
- Existing Manhole with Valve Water
- Existing Water Manhole
- Existing Mile Post Type A
- Existing Mile Post Type B
- Existing Mile Post Type C
- Existing Reference Marker
- Existing RW Marker
- Existing Utility Marker
- Existing Monument Found
- Existing Monument set
- Existing RW Property Monument Found
- Existing RW PropertyMonument set
- Existing Object Marker Type I
- Existing Object Marker Type II
- Existing Object Marker Type III
- Existing Electrical Pedestal
- Existing Telephone Pedestal
- Existing Fiber Optic Telephone Pedestal
- Existing TV Pedestal
- Existing Fiber Optic TV Pedestal
- Existing Fuel Filler Pipes
- Existing Traverse PI Aerial Panel
- Existing Pole
- Existing Power Pole
- Existing Power Pole with Transformer
- Existing Telephone Pole
- Existing Wood Pole
- Existing Post
- Existing Pedestrian Push Button Post
- Existing Control Point CP
- Existing Control Point GPS-RTK
- Existing Control Point TRI
- Existing Reference Marker Point NGS
- Existing Pull Box
- Existing Intelligent Transportation Pull Box
- Existing Water Pump
- Existing Slotted Reinforced Concrete Pipe
- Existing RR Profile Spot
- Existing Fuel Leak Sensors
- Existing Highway Sign
- Existing Miscellaneous Spot
- Existing Lighting Standard Pole
- Existing Traffic Signal Standard
- Existing Transformer
- Existing Large Evergreen Tree
- Existing Small Evergreen Tree
- Existing Large Tree
- Existing Small Tree
- Existing Tree Trunk
- Existing Pad Mounted Traffic Signal Control Box
- Existing Undefined Manhole
- Existing Undefined Pull Box
- Existing Undefined Pedestal
- Existing Undefined Valve
- Existing Undefined Pipe Vent
- Existing Gas Valve
- Existing Water Valve
- Existing Fuel Pipe Vent
- Existing Gas Pipe Vent
- Existing Sanitary Pipe Vent
- Existing Storm Drain Pipe Vent
- Existing Water Pipe Vent
- Existing Weather Station
- Existing Ground Water Well Bore Hole
- Existing Windmill or Tower
- Existing Witness Corner
- Flashing Beacon
- Flagger
- Pipe Mounted Flasher
- Sanitary Force Main with Valve

NORTH DAKOTA DEPARTMENT OF TRANSPORTATION	
4-20-11	
REVISIONS	
DATE	CHANGE

This document was originally issued and sealed by Roger Weigel, Registration Number PE- 2930, on 4/20/11 and the original document is stored at the North Dakota Department of Transportation

Symbols

D-20-32

- Pad Mounted Feed Point
- Pipe Mounted Feed Point with Pad
- Pole Mounted Feed Point
- Headwall
- Double Headwall with Vegitation Barrier
- Single Headwall with Vegitation Barrier
- Pole Mounted Head
- Sprinkler Head
- Fire Hydrant
- Inlet Type 1
- Inlet Type 2
- Double Inlet Type 2
- Inlet Grate Type 2
- Junction Box
- High Mast Light Standard 10 Luminaire
- High Mast Light Standard 3 Luminaire
- High Mast Light Standard 4 Luminaire
- High Mast Light Standard 5 Luminaire
- High Mast Light Standard 6 Luminaire
- High Mast Light Standard 7 Luminaire
- High Mast Light Standard 8 Luminaire
- High Mast Light Standard 9 Luminaire
- Relocate Light Standard
- Overhead Sign Structure Load Center
- Light Standard 100 Watt High Pressure Sodium Vapor Luminaire
- Light Standard 1000 Watt High Pressure Sodium Vapor Luminaire
- Light Standard 150 Watt High Pressure Sodium Vapor Luminaire
- Light Standard 175 Watt High Pressure Sodium Vapor Luminaire
- Light Standard 200 Watt High Pressure Sodium Vapor Luminaire
- Light Standard 250 Watt High Pressure Sodium Vapor Luminaire
- Light Standard 310 Watt High Pressure Sodium Vapor Luminaire
- Light Standard 35 Watt High Pressure Sodium Vapor Luminaire
- Light Standard 400 Watt High Pressure Sodium Vapor Luminaire
- Light Standard 50 Watt High Pressure Sodium Vapor Luminaire
- Light Standard 70 Watt High Pressure Sodium Vapor Luminaire
- Light Standard 700 Watt High Pressure Sodium Vapor Luminaire
- Manhole
- Manhole 48 Inch
- Sanitary Force Main Manhole
- Sanitary Sewer Manhole
- Storm Drain Manhole
- Storm Drain Manhole with Inlet
- Reset Mile Post
- Mile Post Type A
- Mile Post Type B
- Mile Post Type C
- Right of Way Marker
- Tubular Marker
- Concrete Monument to Be Set
- RW Property Monument to Be Set
- Object Marker Type I
- Object Marker Type II
- Object Marker Type III
- Caution Mode Arrow Panel
- Back to Back Vertical Panel Sign
- Double Direction Arrow Panel
- Left Directional Arrow Panel
- Right Directional Arrow Panel
- Sequencing Arrow Panel
- Truck Mounted Arrow Panel
- Power Pole
- Wood Pole
- Pedestrian Push Button Post
- Property Corner
- Pull Box
- Intelligent Transportation Pull Box
- Sanitary Pump
- Storm Drain Pump
- Reinforced Pavement
- Reinforced Concrete End Section 15 Inch
- Reinforced Concrete End Section 18 Inch
- Reinforced Concrete End Section 24 Inch
- Reinforced Concrete End Section 30 Inch
- Reinforced Concrete End Section 36 Inch
- Reinforced Concrete End Section 42 Inch
- Reinforced Concrete End Section 48 Inch
- Reinforced Concrete End Section 54 Inch
- Reset Right of Way Marker
- Reset USGS Marker
- Right of Way Markers
- Riser 30 Inch
- CSB — Continuous Split Barrel Sample
- FA — Flight Auger Sample
- SB — Split Barrel Sample
- T — Thinwall Tube Sample
- Highway Sign
- SNOW GATE 18 FT
- SNOW GATE 28 FT
- SNOW GATE 40 FT
- N — Standard Penetration Test
- Transformer
- Incl — Inclinometer Tube
- Underdrain Cleanout
- Excavation Unit
- Water Valve

NORTH DAKOTA DEPARTMENT OF TRANSPORTATION	
4-20-11	
REVISIONS	
DATE	CHANGE

This document was originally issued and sealed by Roger Weigel, Registration Number PE-2930, on 4/20/11 and the original document is stored at the North Dakota Department of Transportation

LONGITUDINAL JOINT DETAILS

D-550-2

UNTIED JOINTS (silicone seal)

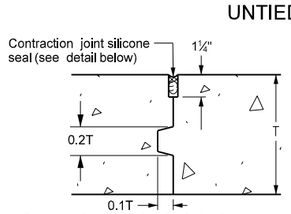

Sawed longitudinal joint with keyway

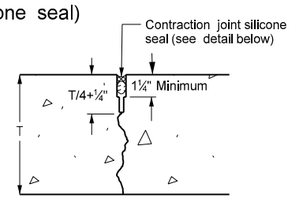

Sawed longitudinal joint without keyway

TIED JOINTS (hot poured elastic seal)

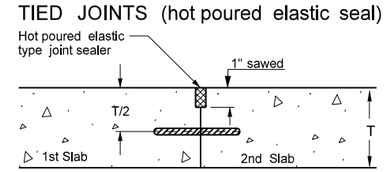

Longitudinal construction joint (tied butt joint)

Notes:

1. The hot poured elastic type joint sealer shall be in accordance with Section 826.02A.2 of the Standard Specifications.
2. The longitudinal joint and seal shall be included in the price bid for the P.C.C. pavement.
3. Tie bars shall not be placed within 18 inches of a transverse skewed joint.
4. Where tie bars are installed bent and later straightened, Grade 40 steel shall be used.
5. Tie bar spacing can be increased up to 10% to facilitate construction.
6. Tie Bars shall be at a 48 inch maximum spacing.
7. A "Warp" joint is a sawed joint or a construction joint with a keyway.
8. A "Butt joint" is a construction joint with no keyway.

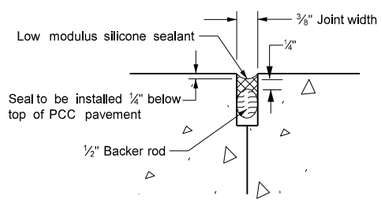

Contraction joint silicone seal

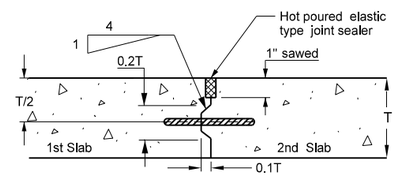

Longitudinal construction joint (tied keyed joint)

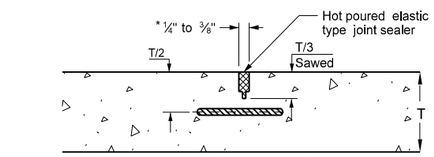

* Width requirement for top 1" only, bottom portion of saw cut may be narrower

Sawed longitudinal joint

TIEBAR SPACINGS (In)

DIST TO FREE EDGE (FT) / BAR LENGTH	BAR SIZE	# 3 BAR										# 4 BAR												# 5 BAR												# 6 BAR												
	GRADE STEEL	GRADE 40				GRADE 60						GRADE 40					GRADE 60							GRADE 40						GRADE 60						GRADE 40						GRADE 60						
		24"				30"						24"					36"							30"						42"						36"						48"						
		4	6	8	10	4	6	8	10	12	14	8	10	12	14	16	8	10	12	14	16	22	24	10	12	14	16	22	24	10	12	14	16	22	24	10	12	14	16	19	22	24	10	12	14	16	19	22	24
6"	WARP	–	48	39	–	–	48	48	–	–	–	48	–	–	–	–	48	–	–	–	–	–	–	–	–	–	–	–	–	–	–	–	–	–	–	–	–	–	–	–	–	–	–	–	–	–	–	–	–	–
	BUTT		37	27			48	42				48					48																																
8"	WARP	48	39	29	24	48	48	44	35	29	25	48	42	35	30	26	48	48	48	45	39	28	26	48	48	47	41	30	27	48	48	48	48	45	41	48	48	48	48	43	39	48	48	48	48	48	48	48
	BUTT	42	27			48	42	31	25			37	29	24			48	44	37	32	27			46	39	33	29			48	48	48	43	32	29	48	48	48	48	35	30	27	48	48	48	48	45	41
8½"	WARP	48	37	28		48	48	42	33	28	24	48	39	33	28	24	48	48	48	42	37	27	24	48	48	44	38	28	25	48	48	48	48	42	38	48	48	48	48	47	40	37	48	48	48	48	48	48	48
	BUTT	39	26			44	39	29				35	27				48	42	35	29	26			44	36	31	27			48	48	47	41	30	27	48	48	45	39	33	28	26	48	48	48	48	42	39
9"	WARP	48	35	26		48	48	39	31	26		47	37	31	26		48	48	47	40	35	25		48	48	42	36	26	24	48	48	48	48	40	36	48	48	48	48	44	38	35	48	48	48	48	48	48	48
	BUTT	37	24			48	37	27				33	26				48	40	33	28	25			41	34	29	25			48	48	44	39	28	25	48	48	42	37	31	26	24	48	48	48	48	47	40	37
9½"	WARP	48	33	25		48	48	37	30	25		44	35	29	25		48	48	44	38	33	24		48	46	39	34	25		48	48	48	48	38	34	48	48	48	48	42	36	33	48	48	48	48	48	48	48
	BUTT	35				48	35	26				31	25				47	37	31	27				39	32	27	25			48	48	42	37	27	24	48	47	40	35	29	25		48	48	48	48	44	38	35
10"	WARP	47	31			48	47	35	28			42	34	28	24		48	48	42	36	31			48	44	37	33	24		48	48	48	48	36	33	48	48	48	48	40	34	31	48	48	48	48	48	48	47
	BUTT	33				48	33	25				29	24				45	36	29	25				37	31	26	24			48	46	40	35	25		48	45	38	33	28	24		48	48	48	48	42	36	33
10½"	WARP	45	30			48	45	34	27			40	32	26			48	48	40	34	30			48	42	36	31			48	48	48	47	34	31	48	48	48	45	38	33	30	48	48	48	48	48	48	45
	BUTT	32				48	32	24				28					42	34	28	24				35	29	25				48	44	38	33	24		48	42	36	32	27			48	48	48	48	40	34	31
11"	WARP	43	28			48	43	32	26			38	31	25			48	46	38	33	28			48	40	34	30			48	48	48	45	32	30	48	48	48	43	36	31	28	48	48	48	48	48	47	43
	BUTT	30				46	30					27					40	32	27					34	28	24				48	42	36	32			48	40	35	30	25			48	48	48	46	38	33	30
11½"	WARP	41	27			48	41	31	24			36	29	24			48	44	36	31	27			46	38	32	28			48	48	48	43	31	28	48	48	47	41	34	30	27	48	48	48	48	48	45	41
	BUTT	29				44	29					25					39	31	25					32	27					48	40	35	30			46	39	33	29	24			48	48	48	44	37	31	29
12"	WARP	39	26			48	39	29				35	28				48	42	35	30	26			44	36	31	28			48	48	47	41	30	27	48	48	45	40	33	28	26	48	48	48	48	48	43	39
	BUTT	27				42	27					25					37	30	25					31	25					46	39	33	29			45	37	32	28				48	48	48	42	35	30	27
12½"	WARP	38	25			48	38	28				33	27				48	40	33	29	25			42	35	30	26			48	48	45	39	28	26	48	48	43	38	32	27	25	48	48	48	48	48	41	38
	BUTT	27				40	27										35	28						29	25					44	37	32	27			42	35	30	27				48	48	45	40	34	29	26
13"	WARP	36	24			48	36	27				32	26				48	39	32	27	24			40	33	29	25			48	48	43	38	27	25	48	48	41	36	30	26	24	48	48	48	48	46	40	36
	BUTT	25				38	25										34	27						28						42	35	30	27			41	34	29	25				48	48	44	38	32	28	25
13½"	WARP	35				48	35	26				31	25				47	37	31	26				39	32	28	24			48	48	42	36	26	24	48	47	40	35	29	25		48	48	48	48	44	38	35
	BUTT	25				37	25										33	26						27						41	34	29	25			39	33	28	25				48	48	42	37	31	27	24
14"	WARP	34				48	34	25				30	24				45	36	30	25				37	31	27				48	47	40	35	25		48	45	38	34	28	24		48	48	48	48	43	37	34
	BUTT	24				35	24										32	25						26						39	33	28	25			38	32	27	24				48	47	40	35	30	26	
14½"	WARP	32				48	32	24				29					43	35	29	25				36	30	26				48	45	39	34	24		48	43	37	32	27			48	48	48	48	41	35	32
	BUTT					34											30	25						25						38	32	27	24			36	30	26					48	46	39	34	29	25	
15"	WARP	31				47	31					28					42	33	28	24				35	29	25				48	44	37	33	24		48	42	36	31	26			48	48	48	47	40	34	31
	BUTT					33											29							25						37	31	26				35	29	25					48	44	38	33	28	24	

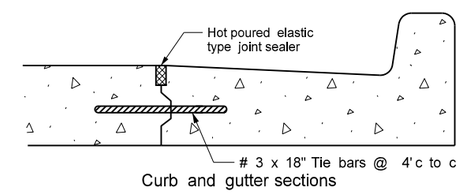

Curb and gutter sections

JOINT SEALER DETAILS

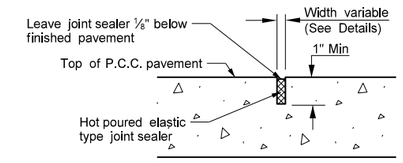

Typical section

NORTH DAKOTA DEPARTMENT OF TRANSPORTATION	
9-15-2010	
REVISIONS	
DATE	CHANGE
10/23/2012	Expanded Tie Bar Table

This document was originally issued and sealed by Roger Weigel, Registration Number PE-2930, on 10/23/2012 and the original document is stored at the North Dakota Department of Transportation

TRANSVERSE CONTRACTION JOINT DETAILS

D-550-3

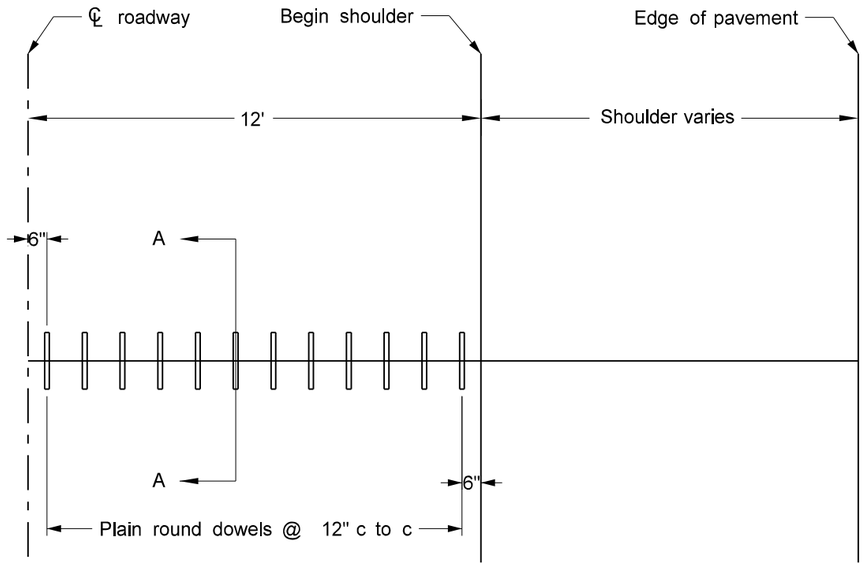

CONTRACTION JOINT DOWEL ASSEMBLY
(1/2 roadway shown)

Notes

1. The joint seal details apply to both doweled and non-doweled (plain) transverse joints.
2. T = Thickness of pavement.
3. Dowels
   Pavement 10" or less: 1¼" X 18" plain round
   Pavement greater than 10": 1½" X 18" plain round
4. B = T/4 + ¼" for AE or YE non-dowelled concrete pavement
   or T/3 for high early or dowelled concrete pavement

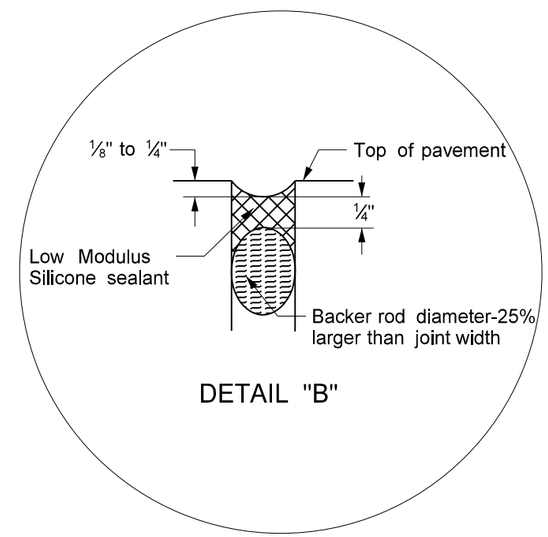

DETAIL "B"

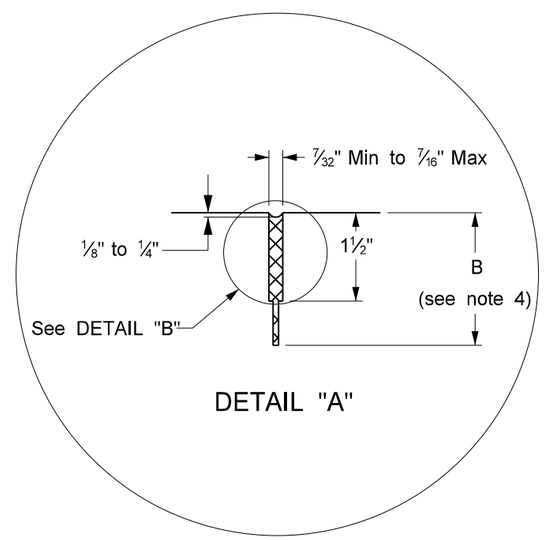

DETAIL "A"

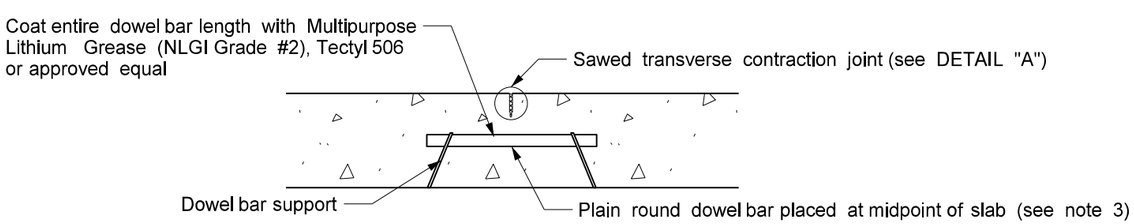

SECTION A-A

NORTH DAKOTA DEPARTMENT OF TRANSPORTATION	
9-15-2010	
REVISIONS	
DATE	CHANGE

This document was originally issued and sealed by Roger Weigel, Registration Number PE- 2930, on 9/15/2010 and the original document is stored at the North Dakota Department of Transportation

CONSTRUCTION SIGN DETAIL

D-704-5

SIGN NUMBER	G20-10-108
WIDTH x HEIGHT	9'-0" x 4'-0"
BORDER WIDTH	1.25" (inset 0.75")
CORNER RADIUS	3"
MOUNTING	Ground
BACKGROUND	TYPE: 3A Reflective
	COLOR: Fluorescent Orange
LEGEND/BORDER	TYPE: Non-Refl
	COLOR: Black

SYMBOL	X	Y	WID	HT	ANGLE
	42.1	6.2	24	4	0

STATION(S):

AREA: 36.0 Sq.Ft.

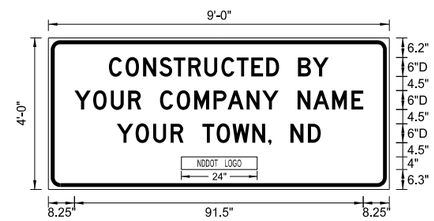

Dimensions are in inches.tenths

Letter locations are panel edge to lower left corner

LETTER POSITION (X)																				LENGTH	SIZE	SERIES
C	O	N	S	T	R	U	C	T	E	D		B	Y							69.7	6	D 2000
19.2	24.5	30	35.1	39.7	44.3	49.4	54.8	59.7	64.3	69	73.1	79.1	83.7									
Y	O	U	R		C	O	M	P	A	N	Y		N	A	M	E				91.5	6	D 2000
8.3	14.2	19.8	25.3	29.4	35.4	40.7	46.2	52.4	56.8	62.8	67.8	72.9	78.9	83.9	89.9	96						
Y	O	U	R		T	O	W	N	,		N	D								64.6	6	D 2000
21.7	27.6	33.2	38.7	42.8	48.8	53.3	58.4	64.6	69.6	70.7	76.7	82.2										

Notes:

1. Sign shall be placed a distance of ½A following the End Road Work (G20-2a-48) sign. There shall be a maximum of 2 signs per project.
2. Sign shall be post mounted.
3. Sign required on rural projects with a 30 day or longer duration and it is not required on seal coat projects or other short duration projects.
4. Sign shall not be placed in urban areas or within city limits.

Advance Warning Sign Spacing (A)			
Road Type	Distance between signs min. (ft)		
	A	B	C
Urban - Low Speed (30 mph or less)	150	150	150
Urban - Low Speed (over 30 to 40 mph)	280	280	280
Urban - High Speed (over 40 mph to 50 mph)	360	360	360
Rural - High Speed (over 50 mph to 65 mph)	720	720	720
Urban Expressway and Freeway (55 mph to 60 mph)	850	1350	2200
Rural Expressway and Freeway (70 mph to 75 mph)	1000	1500	2640
Interstate/4-Lane Divided (Maintenance and Surveying)	750	1000	1500

NORTH DAKOTA
DEPARTMENT OF TRANSPORTATION

8-22-12

REVISIONS

DATE	CHANGE

This document was originally issued and sealed by Roger Weigel Registration Number PE- 2930, on 8/22/12 and the original document is stored at the North Dakota Department of Transportation

BREAKAWAY SYSTEMS FOR CONSTRUCTION ZONE SIGNS

PERFORATED TUBE

D-704-7

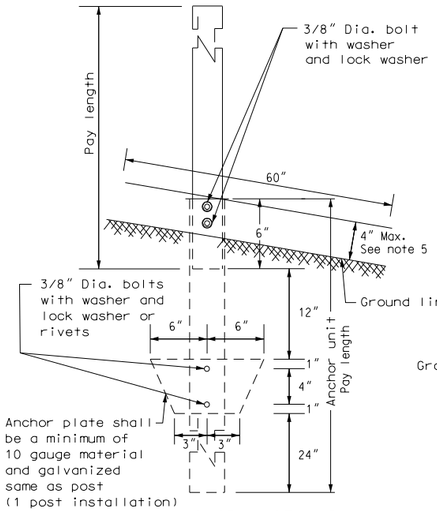

ANCHOR UNIT AND POST ASSEMBLY

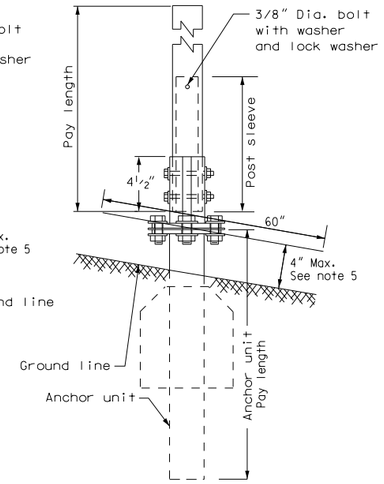

SLIP BASE ANCHOR UNIT AND POST SLEEVE ASSEMBLY

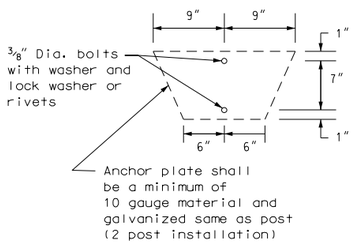

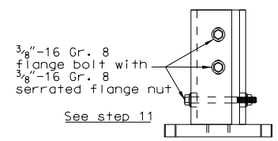

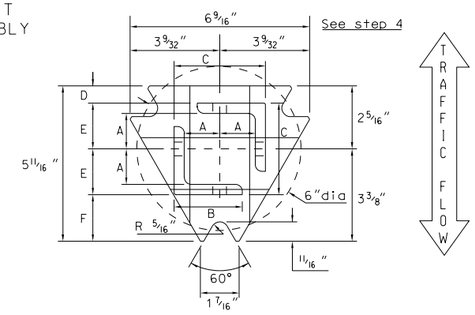

TOP POST RECEIVER

Materials: Plate - ASTM A572 grade 50
Angle receiver - 2 1/2"x 2 1/2"x 3/8" ASTM A36 structural angle

TOP POST RECEIVER DATA TABLE						
Square Post Sizes	A	B	C	D	E	F
2 3/16" x 10 Ga. Square Post	1 9/64"	2 1/2"	3 1/32"	2 5/32"	1 33/64"	1 7/8"
2 1/2" x 10 Ga. Square Post	1 9/32"	2 1/2"	3 5/16"	5/8"	1 21/32"	1 3/4"

2 3/16" x 10 gauge may be inserted into 2 1/2" x 10 gauge for additional wind load.

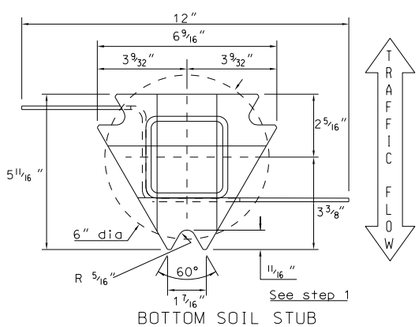

BOTTOM SOIL STUB

Materials: Tube - 3"x 3"x 7 gauge ASTM A500 Gr B tube
Stabilizing Wing - 7 gauge H.R.P.O. ASTM A 569
Plate - ASTM A572 grade 50

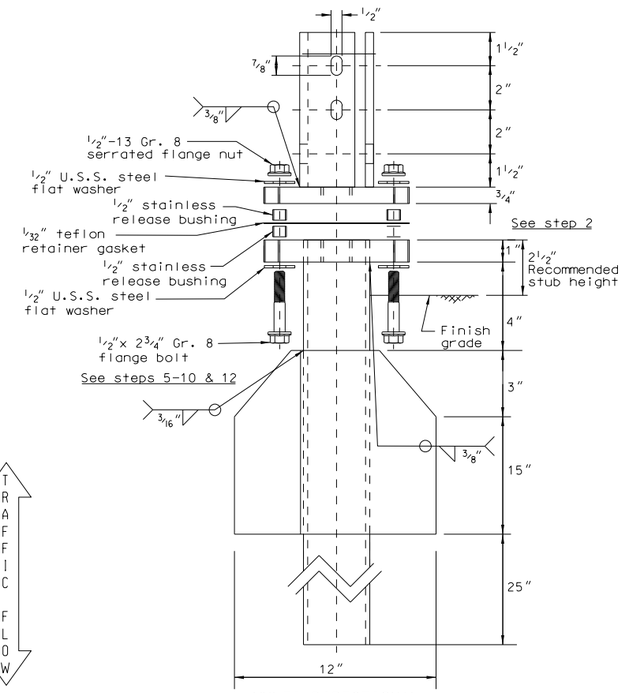

MULTI-DIRECTIONAL SLIP BASE ASSEMBLY

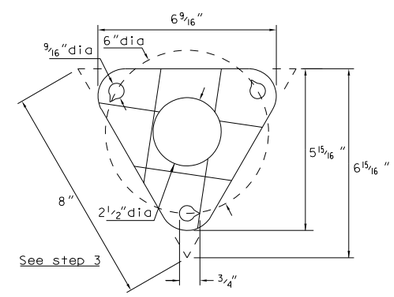

BOLT RETAINER FOR BASE CONNECTION

Materials: 1/32" reprocessed Teflon

Notes
1. Slip base bolts shall be torqued as specified by the manufacturer.
2. The 2 3/16" size 10 gauge is shown as 2.19" size on the plans. The 2 1/2" size 10 gauge is shown as 2.51" size on the plans.
3. Anchor for 2", 2 1/4", and 2 1/2" posts.
4. Anchor material shall be 7 gauge H.R.P.O. Commercial quality ASTM A569 and 3"x 3"x 7 gauge ASTM A500 Grade B. Anchor shall have a yield strength of 43.9 KSI and tensile strength of 59.3 KSI. Anchor shall be hot dipped galvanized per ASTM A123/A153. All tolerances on anchor unit and slip base bottom assembly are ± 0.005 unless otherwise noted.
5. 4" vertical clearance of anchor or breakaway base. The 4" x 60" measurement shall be made above and below post location and also back and ahead of post.
6. When used in concrete sidewalk, anchor shall be the same except without the wings.
7. Four post signs shall have over 8' between the first and fourth posts.

Number of Posts	Telescoping Perforated Tube					
	Post Size In.	Wall Thickness Gauge	Sleeve Size In.	Wall Thickness Gauge	Slip Base	Anchor Size Without Slip Base In.
1	2	12			No	2 1/4
1	2 1/4	12			No	2 1/2
1	2 1/2	12			B	3
1	2 1/2	10			Yes	
1	2 1/4	12	2	12	Yes	
1	2 1/2	12	2 1/4	12	Yes	
2	2	12			No	2 1/4
2	2 1/4	12			No	2 1/2
2	2 1/2	12			Yes	
2	2 1/2	10			Yes	
2	2 1/4	12	2	12	Yes	
2	2 1/2	12	2 1/4	12	Yes	
3 & 4	2 1/2	12			Yes	
3 & 4	2 1/2	10			Yes	
3 & 4	2 1/2	12	2 1/4	12	Yes	
3 & 4	2 1/4	12	2	12	Yes	
3 & 4	2 1/2	10	2 3/16	10	Yes	

B - The 2 1/2", 12 gauge posts do not need breakaway bases when placed in standard soils, but require a shim as specified by the manufacturer. The breakaway base is required when the support is placed in weak soils. The Engineer shall determine if the soils are weak. Weak soils are classified as boggy, wet, or loose soil areas.

MULTI-DIRECTIONAL SLIP BASE ASSEMBLY	
STEP	INSTALLATION PROCEDURE
1.	Install bottom soil anchor stub plumb and squared up with road, with point of plate facing oncoming traffic.
2.	Depth of imbedment to leave 2 1/2" from grade to top of anchor plate.
3.	Place teflon bolt retainer gasket on top of bottom plate (make sure that notches in holes are pointing counter clockwise).
4.	Place top post receiver on to retainer gasket, properly indexed so that angle receivers are squared up with road.
5.	Slide 1 each 1/2" flat washer on to 1 each inverted 1/2"-13 gr. 8 flange bolt, followed by 1 each stainless steel release bushing.
6.	Insert above bolt with washer and bushing up through notched points of top and bottom plates, passing through hole in gasket.
7.	Slide second bushing down on to above bolt until it rests on top of gasket followed by second washer.
8.	Complete by threading 1/2"-13 gr. 8 serrated flange nut snugly down against top of washer.
9.	Repeat steps 5,6,7 & 8 at the two remaining notched triangle points.
10.	Insert sign post into angle receivers on top half until post(s) bottom out. *NOTE: Where higher wind load is desired, insert the next size smaller square post inside bottom of main upright post (Minimum of 48", not to exceed beyond bottom edge of sign).
11.	Secure posts into receivers using 3 each 3/8"-16 gr. 8 flange bolts and 3 each 3/8"-16 serrated flange nuts in receiver slots (top 2 bolts should be parallel to highway) do not tighten nuts until all bolts are in place.
12.	After all sub-assembly hardware is tightened, then torque the three 1/2"-13 nuts to 42 ft-lbs, in a circular pattern until all bolt assemblies reach the required torque. *NOTE: On multi-leg installations, be sure that all anchors are squared and lined up with each other.

Telescoping Perforated Tubes							
Tube Size In.	Wall Thickness In.	U.S. Standard Gauge	Weight Per Foot Lbs.	Moment of Inertia In.4	Cross Sect. area In.2	Section Modulus In.3
1 1/2 x 1 1/2	0.105	12	1.702	0.129	0.380	0.172
2 x 2	0.105	12	2.416	0.372	0.590	0.372
2 1/4 x 2 1/4	0.105	12	2.773	0.561	0.695	0.499
2 3/16 x 2 3/16	0.135	10	3.432	0.605	0.841	0.590
2 1/2 x 2 1/2	0.105	12	3.141	0.804	0.803	0.643
2 1/2 x 2 1/2	0.135	10	4.006	0.979	1.010	0.785
4 x 4	0.250	1/4	6.600	3.040	1.940	1.050

NORTH DAKOTA DEPARTMENT OF TRANSPORTATION	
11-21-02	
REVISIONS	
DATE	CHANGE
12-01-04	PE stamp added

This document was originally issued and sealed by MARK S GAYDOS, Registration Number PE-4518, on 12/01/04 and the original document is stored at the North Dakota Department of Transportation

BREAKAWAY SYSTEMS FOR CONSTRUCTION ZONE SIGNS

D-704-8

FLANGED CHANNEL

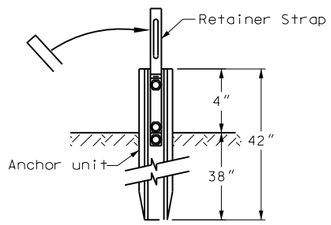

Anchor Unit &
Strap Assembly Detail

STEPS OF INSTALLATION

1. A) Drive anchor unit to within 12″ of ground level.
   B) Proper assembly established by lining up the top ¾″ slot of retainer spacer strap with top hole of anchor unit.
   C) Assemble strap to back of anchor unit using ⅜″-16 UNC x 2.0″ long bolt, lock washer and nut.
   D) Rotate strap 90° to left.
2. A) Drive anchor unit to 4″ dimension.
   B) Rotate strap to vertical position.
3. A) Place ⅜″-16 UNC x 2″ bolt, lock washer & nut in bottom of sign post to facilitate alignment of sign post with proper hole in anchor unit (this coincides with the bottom ¾″ slot in the strap).
   B) Alternately tighten two connector bolts.
4. A) Complete assembly by tightening ⅜″-16 UNC x 2″ long retainer bolt (this fastens sign post to retainer spacer strap).
5. The base post, strap & sign post shall be properly nested. Proper nesting occurs when all flat surfaces of the base post, strap and sign post at the bolts have full contact across the entire width.

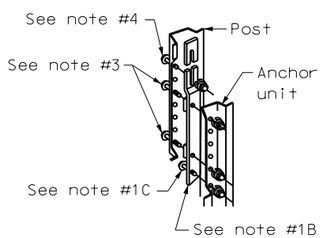

Post/Anchor
Assembly Details

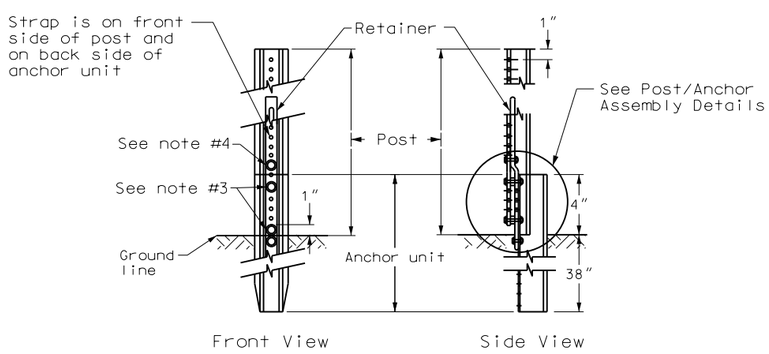

Sign Post Assembly Detail

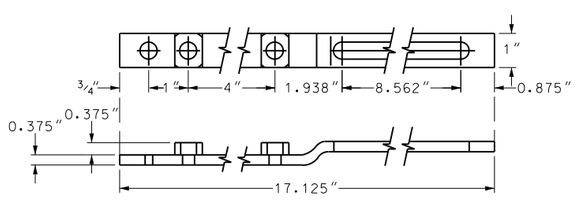

Retainer/Spacer Strap Detail

CHANNEL SIZE IN.	WALL THICKNESS IN.	WEIGHT PER FOOT LBS.	MOMENT OF INERTIA IN. 4	CROSS SECT. AREA IN. SQ.	SECTION MODULUS IN. 3
1.516 x 3.125″	.116	2.00	.179	.590	.225
1.532 x 3.125″	.124	2.25	.201	.648	.254
1.562 x 3.125″	.132	2.50	.233	.748	.289
1.578 x 3.125″	.140	2.75	.271	.819	.329
1.750 x 3.500″	.150	3.00	.372	.918	.403
1.750 x 3.500″	.175	4.00	.500	1.190	.560

3 LB/FT U POSTS

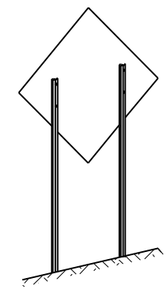

Typical
Installation

Notes

1. Use 3 lb/ft riser anchor units and risers
2. Driven riser posts shall be at least 7′ long and embedded at least 3.5′.
3. A splice shall overlap a minimum of 18″.
4. Use 4 bolts 5/16″ diameter with washers and nuts. Two at top and two at bottom of splice.
5. Anchor unit for guy wires shall be no more than 4″ above ground and embedded at least 3.5′.

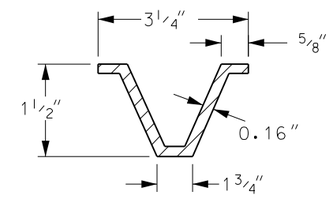

U-Post Detail
(3 lb/ft)

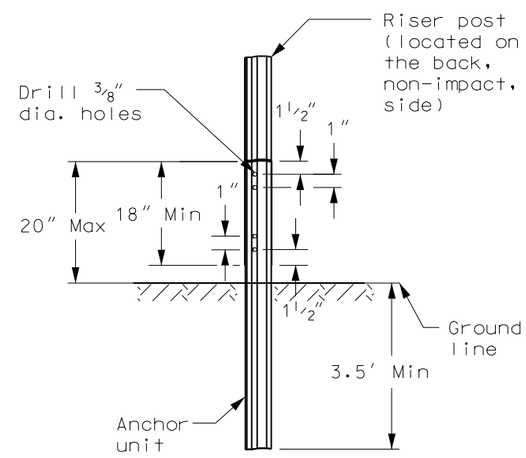

U-Channel Splice
Option 1

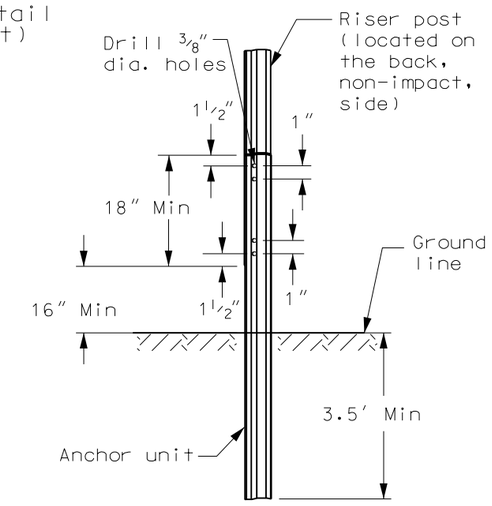

U-Channel Splice
Option 2

NORTH DAKOTA DEPARTMENT OF TRANSPORTATION	
07-28-93	
REVISIONS	
DATE	CHANGE
03-07-01	Revised U-post details
11-21-02	Deleted perforated tube
05-08-03	Revised U-Channel splice
12-01-04	PE stamp added
06-29-05	Revised flanged channel note

This document was originally issued and sealed by MARK S GAYDOS Registration Number PE-4518, on 06/29/05 and the original document is stored at the North Dakota Department of Transportation

CONSTRUCTION SIGN DETAILS
TERMINAL AND GUIDE SIGNS

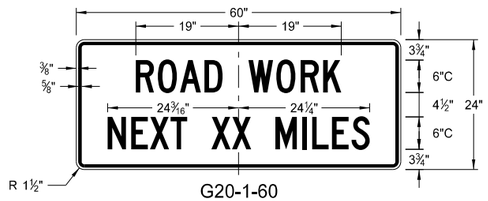

G20-1-60
Legend: black (non-refl)
Background: orange

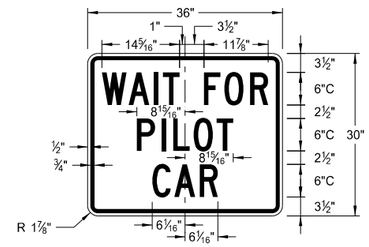

G20-4b-36
Legend: black (non-refl)
Background; orange

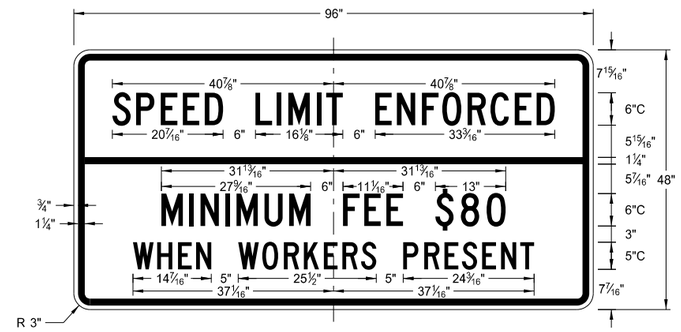

G20-55-96
Legend: black (non-refl)
Background: orange

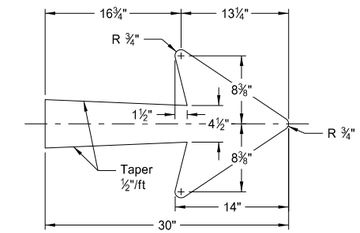

E5-1-48

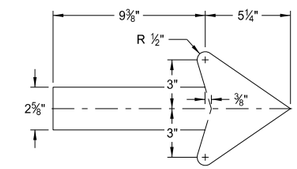

G20-50a-72
G20-52a-72

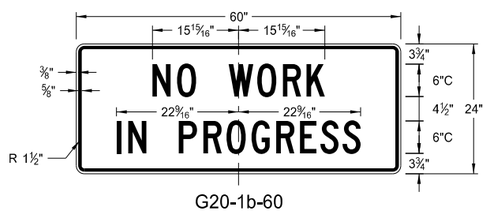

G20-1b-60
Legend: black (non-refl)
Background: orange

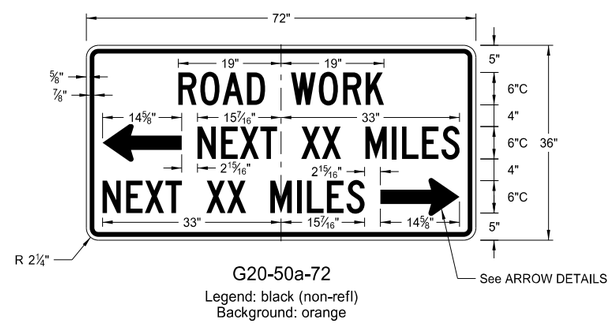

G20-50a-72
Legend: black (non-refl)
Background: orange

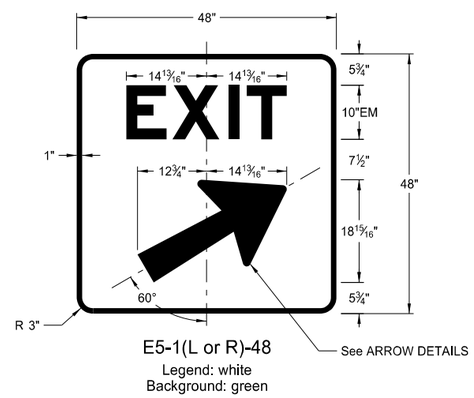

E5-1(L or R)-48
Legend: white
Background: green

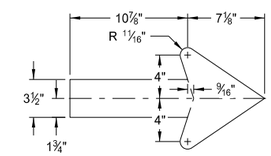

M4-9(L or R)-30
Right or Left

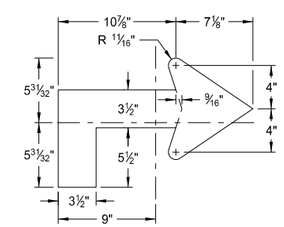

M4-9(L or R)-30
Advanced Right or Left

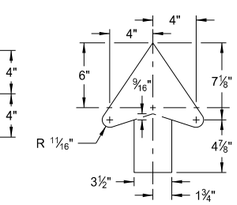

M4-9-30
Straight

ARROW DETAILS

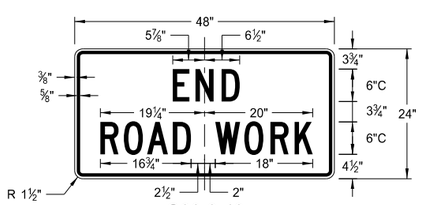

G20-2-48
Legend: black (non-refl)
Background: orange

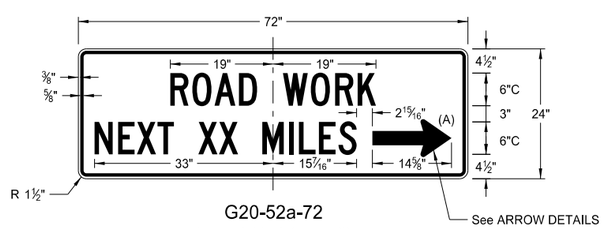

G20-52a-72
Legend: black (non-refl)
Background: orange

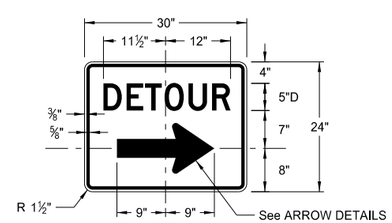

M4-9(L or R)-30 &
M4-9-30
Legend: black (non-refl)
Background: orange

NOTES:

(A) Arrow may be right or left of the legend to indicate construction to the right or left.

NORTH DAKOTA DEPARTMENT OF TRANSPORTATION	
8-13-13	
REVISIONS	
DATE	CHANGE

This document was originally issued and sealed by Roger Weigel, Registration Number PE- 2930, on 8/13/13 and the original document is stored at the North Dakota Department of Transportation

CONSTRUCTION SIGN DETAILS
REGULATORY SIGNS

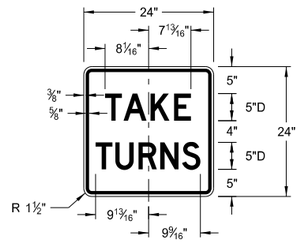

R1-50-24
Legend: black (non-refl)
Background: white

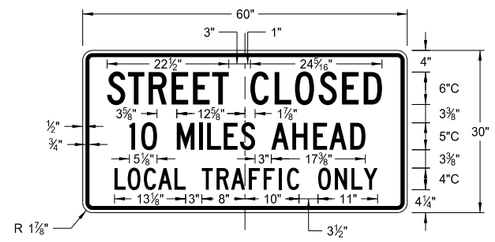

R11-3c-60
Legend: black (non-refl)
Background: white

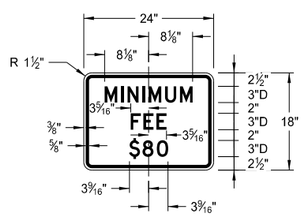

R2-1a-24
Legend: black (non-refl)
Background: white

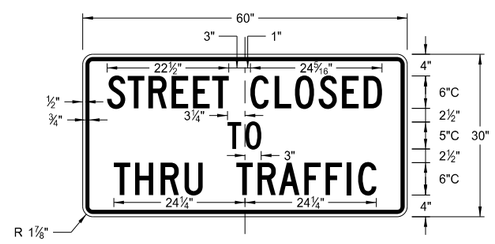

R11-4a-60
Legend: black (non-refl)
Background: white

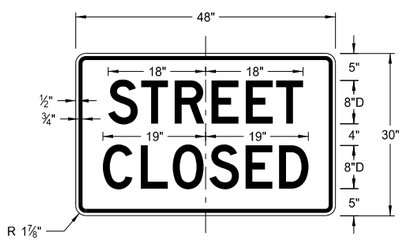

R11-2a-48
Legend: black (non-refl)
Background: white

NORTH DAKOTA DEPARTMENT OF TRANSPORTATION	
8-13-13	
REVISIONS	
DATE	CHANGE

This document was originally issued and sealed by Roger Weigel, Registration Number PE- 2930, on 8/13/13 and the original document is stored at the North Dakota Department of Transportation

D-704-11

CONSTRUCTION SIGN DETAILS
WARNING SIGNS

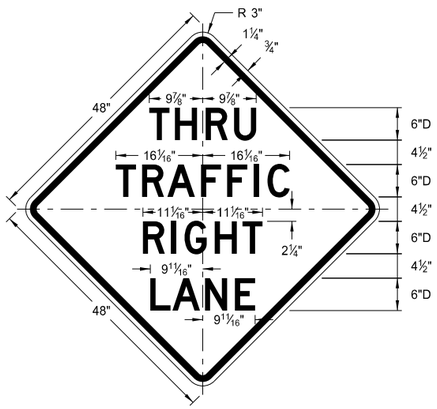

W5-8-48
Legend: black (non-refl)
Background: orange

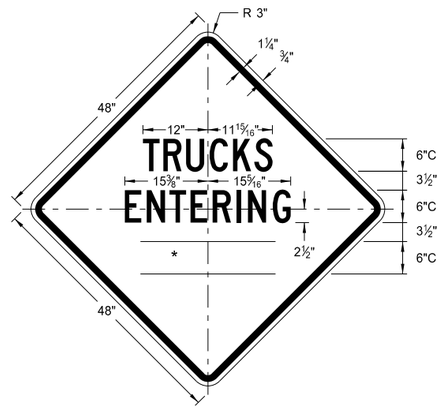

W8-54-48
Legend: black (non-refl)
Background: orange

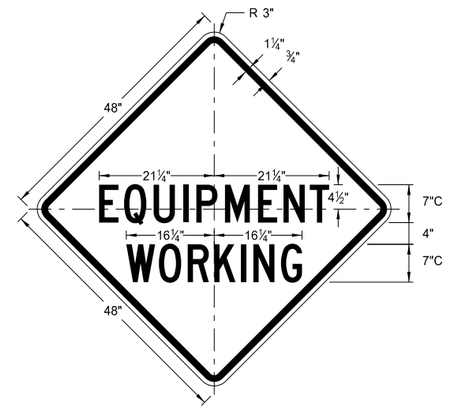

W20-51-48
Legend: black (non-refl)
Background: orange

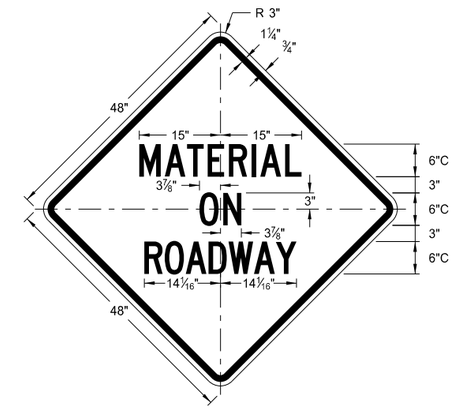

W21-51-48
Legend: black (non-refl)
Background: orange

WORD	LETTER SPACING
AHEAD	Standard
200 FT	Standard
350 FT	Standard
500 FT	Standard
1000 FT	Reduce 40%
1500 FT	Reduce 40%
½ MILE	Reduce 50%
1 MILE	Standard

* DISTANCE MESSAGES

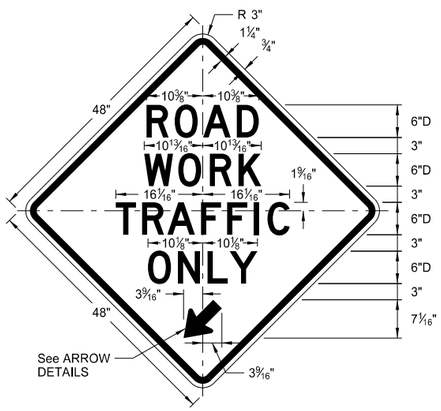

W5-9-48
Legend: black (non-refl)
Background: orange

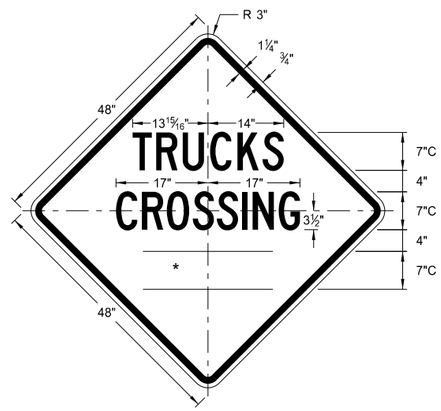

W8-55-48
Legend: black (non-refl)
Background: orange

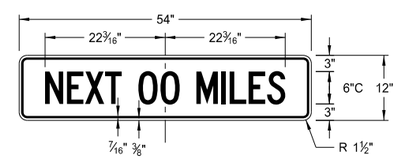

W20-52-54
Legend: black (non-refl)
Background: orange

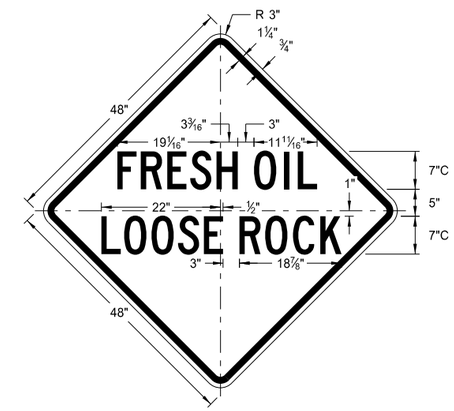

W22-8-48
Legend: black (non-refl)
Background: orange

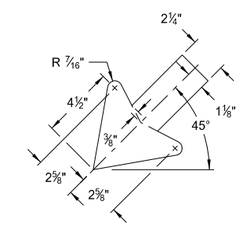

W5-9-48

ARROW DETAILS

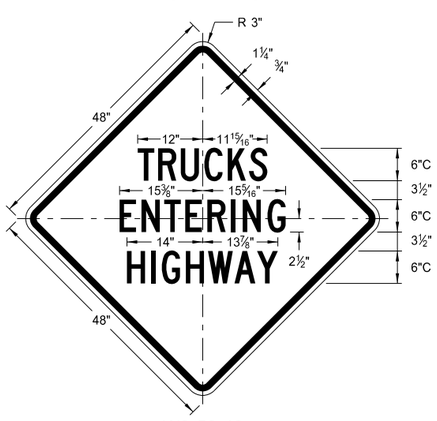

W8-53-48
Legend: black (non-refl)
Background: orange

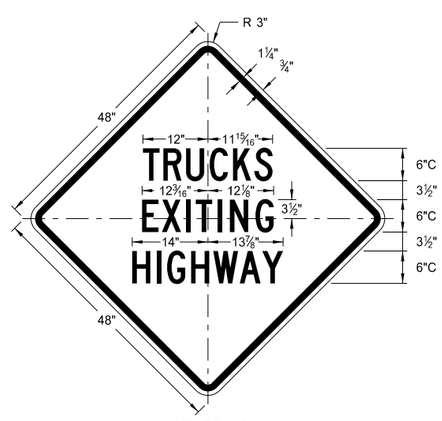

W8-56-48
Legend: black (non-refl)
Background: orange

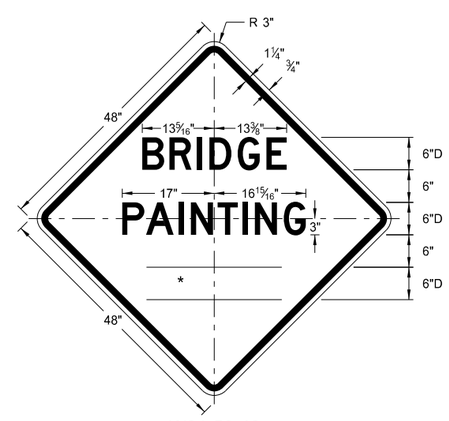

W21-50-48
Legend: black (non-refl)
Background: orange

NORTH DAKOTA DEPARTMENT OF TRANSPORTATION	
8-13-13	
REVISIONS	
DATE	CHANGE

This document was originally issued and sealed by Roger Weigel, Registration Number PE- 2930, on 8/13/13 and the original document is stored at the North Dakota Department of Transportation

BARRICADE DETAILS AND CHANNELIZING DEVICES

D-704-13

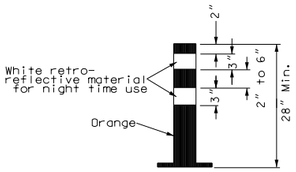

TUBULAR MARKER

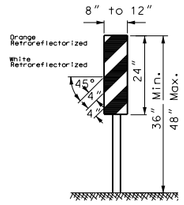

VERTICAL PANEL

(Retroreflective sheeting shall be placed on both sides)

NOTE: Vertical panels used on the expressways or other high speed roadways shall be 12" by 24"

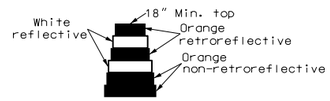

DELINEATOR DRUM

36" Min. height

The markings on drums shall be orange and white stripes 4 to 6 inches wide. There shall be at least two orange and two white stripes. Where drums have ribs or indentations, there shall be no retroreflectorized sheeting in this area. This space shall be no more than 2 inches wide. The drum surface shall be prepared as recommended by the sheeting manufacturer before retro reflective sheeting is applied

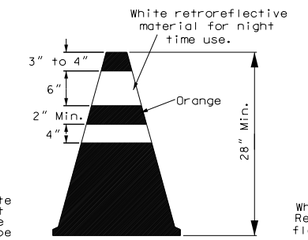

CONE

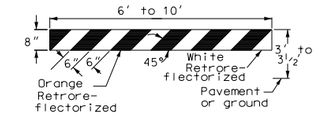

TYPE I BARRICADE

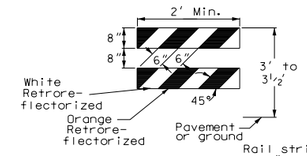

Rail stripe width shall be 4" if barricade length is less than 36".

TYPE II BARRICADE

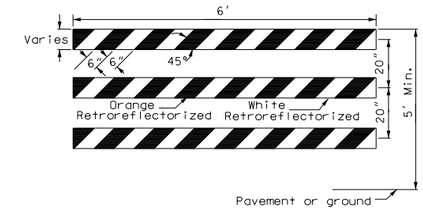

TYPE III BARRICADE

BARRICADES:
Number of retroreflectorized rail faces:
Type I - 2 (One each direction)
Type II - 4 (Two each direction)
Type III- 6 (Three in each direction)

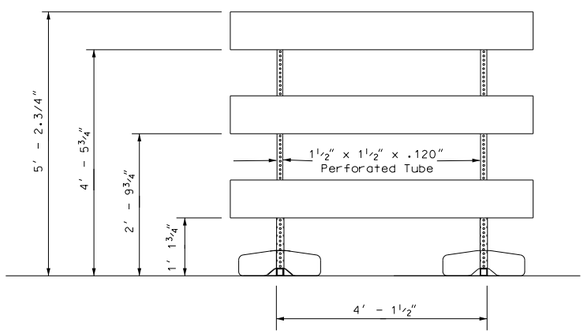

fRONT VIEW

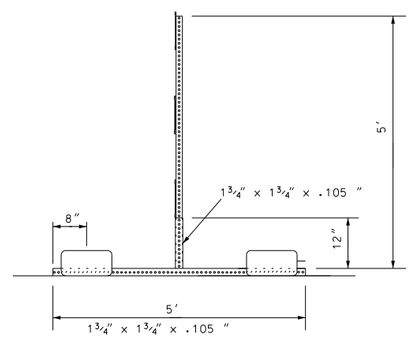

END VIEW

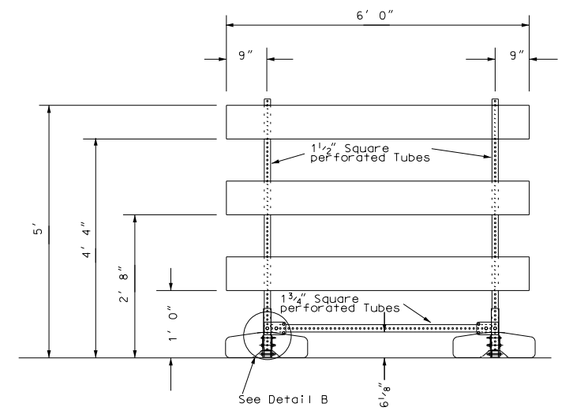

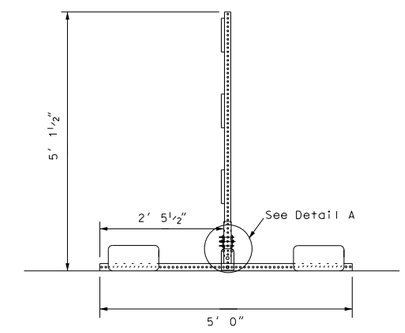

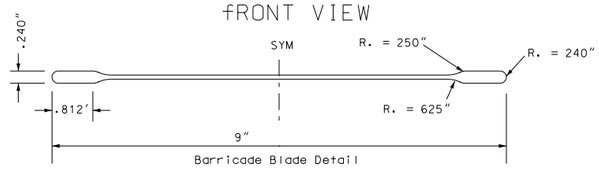

Barricade Blade Detail

Ballast = 45lb sandbag at the end of each leg.

Barricade blade fastened to vertical supports with 2" corner bolts.

Vertical potion of leg is welded to horizontal portion on all four sides.

Masts slide inside vertical portion of legs. No bolts or fastenings devices used.

BARRICADE ASSEMBLY DETAIL
(Use when aluminum blade as detailed above)

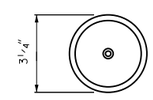

ACRYLIC PLASTIC REFLECTOR

Delineator reflector shall meet the requirements of section 894

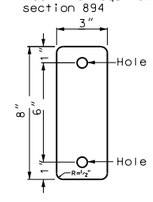

DELINEATOR REFLECTOR

3"x8"- 18 Gauge galvanized steel sheet or 0.080" aluminum plate with white retroreflective sheeting (Type 3A or 3B) as specified in section 894 of the Standard Specifications.

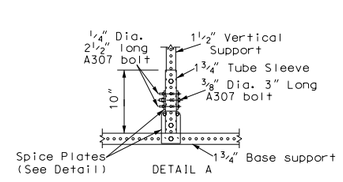

DETAIL A

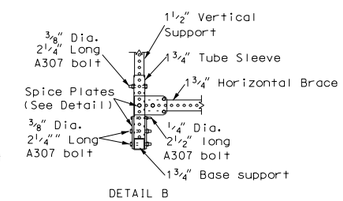

DETAIL B

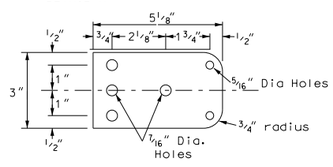

SPLICE PLATE

BARRICADE ASSEMBLY DETAIL
(Use when Plastic I-Beam w/ 1½" Hollow Core Flanges or 1" x 8" x72" wood boards.

NORTH DAKOTA DEPARTMENT OF TRANSPORTATION	
10-1-86	
REVISIONS	
DATE	CHANGE
08-03-87	Type sheeting
10-01-87	Delineator drum note
06-08-88	Barricade type III
06-01-92	General revision
06-10-93	General revision
09-23-93	Vertical panel
06-09-95	Reflective sheeting
03-01-02	Barricade type III assembly details
04-01-02	Type III barricade
12-01-04	PE stamp added
06-29-05	Revised Type II barricade stripe

This document was originally issued and sealed by MARK S GAYDOS Registration Number PE-4518, on 06/29/05 and the original document is stored at the North Dakota Department of Transportation

D-704-14

CONSTRUCTION SIGN AND BARRICADE ASSEMBLY DETAILS

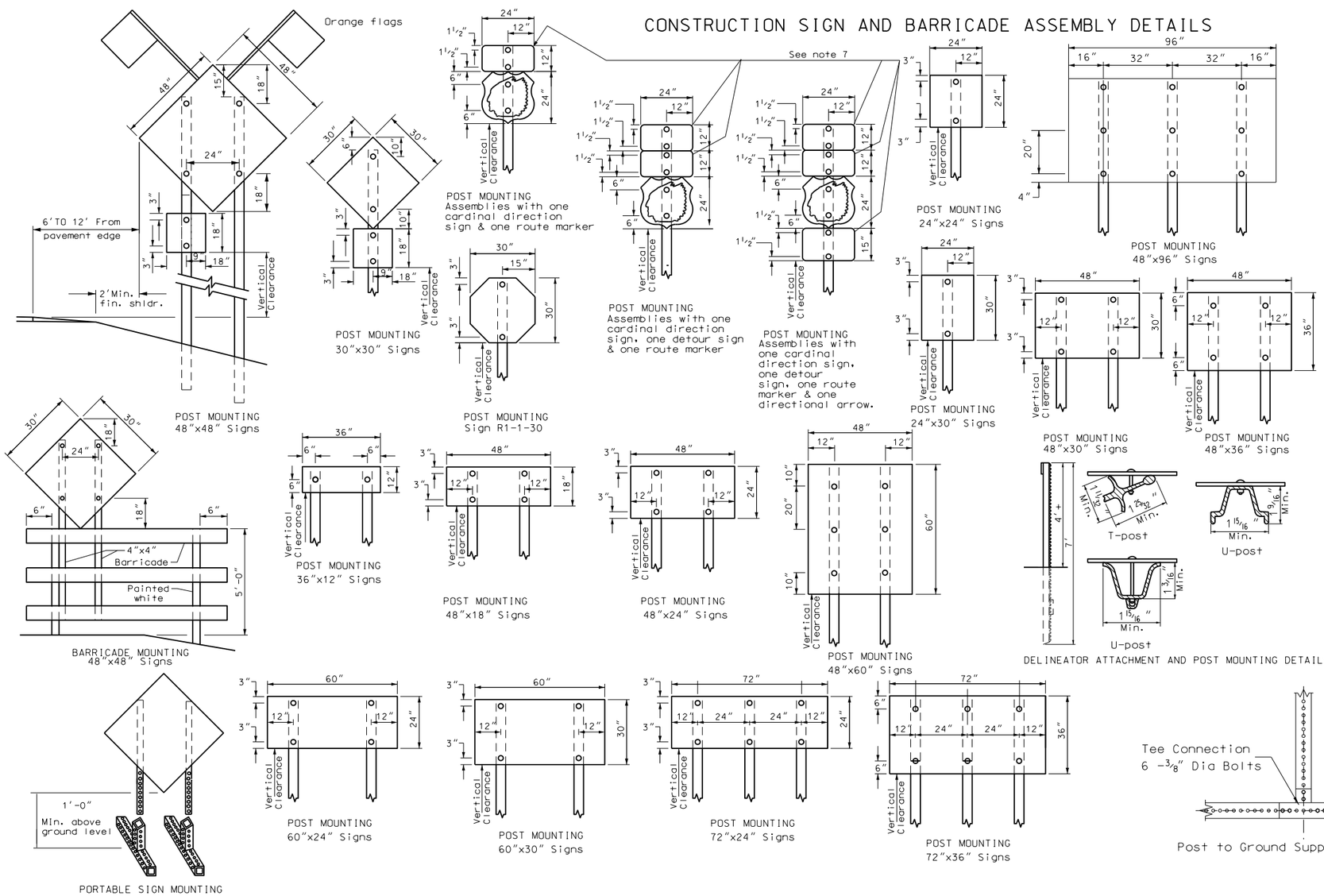

NOTES:

1. Barricade and Sign Supports: Wooden supports shall be painted white. Steel supports shall be galvanized or painted.

2. Barricade Mounting Signs: The bottom of the sign shall be flush with the top of the top rail. Wood sign posts shall be 4"x4" min. SFS or equivalent steel posts. All barricades and barricade mounted signs shall be assembled with 3/8" bolts.

3. Sign Supports: Sign supports shall be 4"x4" min. SFS or equivalent steel post. The anchor for steel supports shall have a stub height of 4" or less. Wood posts more than 4"x4" shall be breakaway. Sign supports shall be imbedded to a sufficient depth so that signs will remain plumb throughout duration of project. It is suggested that wood posts have a min. depth of embedment of 5' and steel posts be embedded a min. 3'-6".
   Material: All signs shall be 0.100" aluminum, 12 gauge steel, 1/2" plywood or other approved material.
   Holes: All holes to be punched round for 3/8" bolts.

4. Alternate Messages: The signs that have alternate messages may have these alternate messages placed on a reflectorized plate without a border and this plate installed and removed as required.

5. Advance Warning Flashing or Sequencing Arrow Panels: The minimum mounting height shall be 7 feet above the roadway to the bottom of the panel, except on vehicle mounted panels which shall be as high as practicable.

6. Delineator Posts: Typical fence post sections are shown in Attachment Details. Other types of metal fence posts may be substituted upon approval of the engineer. These substituted posts shall have reflectors attached similar to the ones shown.

7. Route Marker Auxiliary Signs: The route marker auxiliary signs such as the cardinal direction and directional arrows shall have background colors the same as the route marker they are used with (Interstate route markers, blue background, US and State route markers, white background, Interstate Business loop and spur, green background, and County route markers, blue background).

8. Vertical Clearance: Post mounted signs placed in rural areas shall have a vertical clearance of at least 5 feet measured from the bottom of the sign to the near edge of the driving lane. In business, commercial and residential districts where parking and/or pedestrian movement is likely to occur or where other obstructions to view, the distance between the bottom of the sign to the near edge of the driving lane shall be at least 7 feet. The height to the bottom of secondary signs mounted below another sign may be 1 foot less than the appropriate height specified. Large signs having an area exceeding 50 square feet that are installed on multiple breakaway posts shall be mounted a minimum of 7 feet above the ground.

NORTH DAKOTA DEPARTMENT OF TRANSPORTATION	
10-1-86	
REVISIONS	
DATE	CHANGE
08-01-88	Sign assembly
05-01-92	Sign assembly
03-30-93	Sign supports note
03-04-96	Sign height
08-15-96	Note 8
07-10-97	Note revision
07-31-98	Note & portable sign
10-01-99	Skid mounted sign
02-07-03	Vertical clearance note
11-30-04	Third post added to some signs
12-01-04	PE stamp added

This document was originally issued and sealed by MARK S GAYDOS, Registration Number PE-4518, on 12/01/04 and the original document is stored at the North Dakota Department of Transportation

SIGN LAYOUT FOR ONE LANE CLOSURE
INTERSTATE SYSTEM

D-704-35

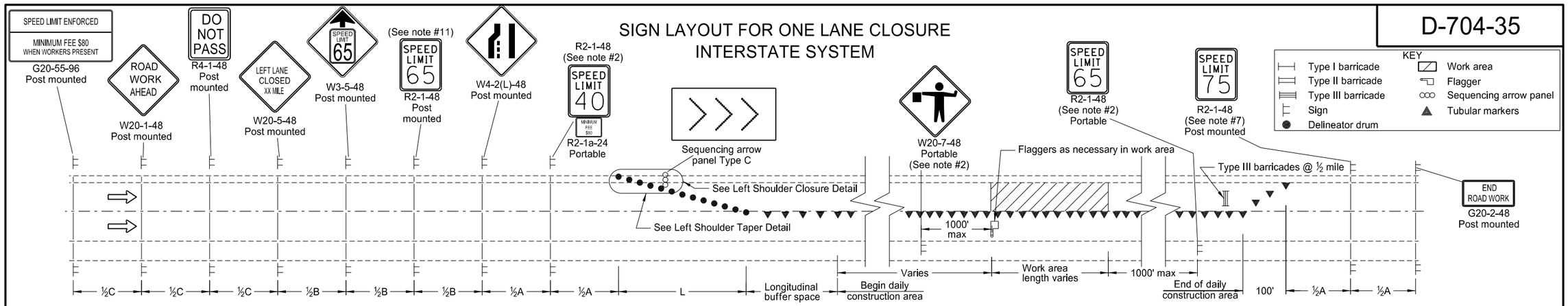

KEY

- Type I barricade
- Type II barricade
- Type III barricade
- Sign
- Delineator drum
- Work area
- Flagger
- Sequencing arrow panel
- Tubular markers

LEFT LANE CLOSED
WORKERS IN WORK AREA

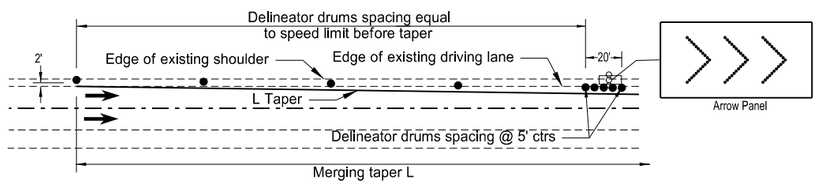

LEFT SHOULDER TAPER DETAIL

ADVANCE WARNING SIGN SPACING			
Road Type	Distance Between Signs Min (ft)		
	A	B	C
Rural - High Speed (over 50 mph to 65 mph)	720	720	720
Urban Expressway and Freeway (55 mph to 60 mph)	850	1350	2200
Rural Expressway and Freeway (70 mph to 75 mph)	1000	1500	2640
Interstate/4-Lane Divided (Maintenance and Surveying)	750	1000	1500

Longitudinal Buffer Space	
Speed (mph)*	Length Min (feet)
20	115
25	155
30	200
35	250
40	305
45	360
50	425
55	495
60	570
65	645
70	730
75	820

*Posted speed, off-peak 85th percentile speed prior to work starting, or the anticipated operating speed in mph.

Notes:

1. Advance signs for flagging shall be installed when flaggers are flagging.
2. The advanced flagger sign and the speed limit signs shall be moved as the work area moves through the construction zone. When the work area is not visible from the flagger, the flagger station shall be placed so the work area is visible. The 65 mph speed limit and the 40 mph speed limit sign shall be spaced at ½A in advance of the flagger sign. The 65 mph speed limit sign shall also be moved. Upon completion of the work day or when workers are not present, the 65 mph speed limit, 40 mph speed limit, and the Minimum Fee $80 signs shall be covered or removed.
3. RAMPS: When the work area encompasses an entrance ramp, the ramp shall be controlled by installing a 40 mph speed limit sign and covering any existing yield sign. Install new yield sign as necessary. When the main line 40 mph speed zone is moved past the ramp, the ramp speed limit sign shall be removed.
4. Variables:
   S=Numerical value of speed limit or 85th percentile
   W=The width of taper.
   L=Minimum length of taper, or SxW for freeways, expressways, and all other roads with speeds of 45 mph or greater,
   or WxSxS/60 for urban, residential, and other streets with speeds of 40 mph or less.
5. Delineator drums, used for tapering traffic shall be spaced at the dimension "S". Tubular markers used for tangents shall be spaced at 2 times dimension "S".
6. Sequencing arrow panels should normally be placed at the beginning of the taper. Where shoulder width does not provide sufficient room, the panel should be moved closer to the work area so that it can be placed on the roadway surface.
   Type C shall be used on roadways with high traffic speeds and volumes (over 40 mph or 5000 ADT or greater).
7. The speed limit shall be re-established. The exact speed limit shall be determined in the field, dependent on location and conditions.
8. Existing speed limit signs within a reduced speed zone shall be covered.
9. Obliterated or covered pavement marking shall be paid for as Obliteration of Pavement Marking. The covering shall be approved by the engineer.
10. When warning signs are used in urban areas and the signs are not portable, flags shall be installed. The flags shall be 24 inches square, mounted perpendicular to the edges of the diamond sign, and at such a distance above the edge so that when the flag is limp it will not touch the sign. Rural areas will not require flags.
11. The reduced speed limit shall be determined dependent on the in place speed limit before construction. The speed limit reduction should not exceed 10 mph below the existing speed limit, unless the design speed of the work zone feature has been reduced below the 10 mph. In this case, the speed limit reduction shall not exceed 30 mph. Where speed limits are to be reduced more than 30 mph, a second speed limit sign shall be installed with the desired speed reduction, but shall not exceed 30 mph. The second speed limit sign shall be placed at ½B.
12. The contractor has the option of using portable sign supports in lieu of post mounted signs as shown on the standard drawings as specified in Section 704.03 C.

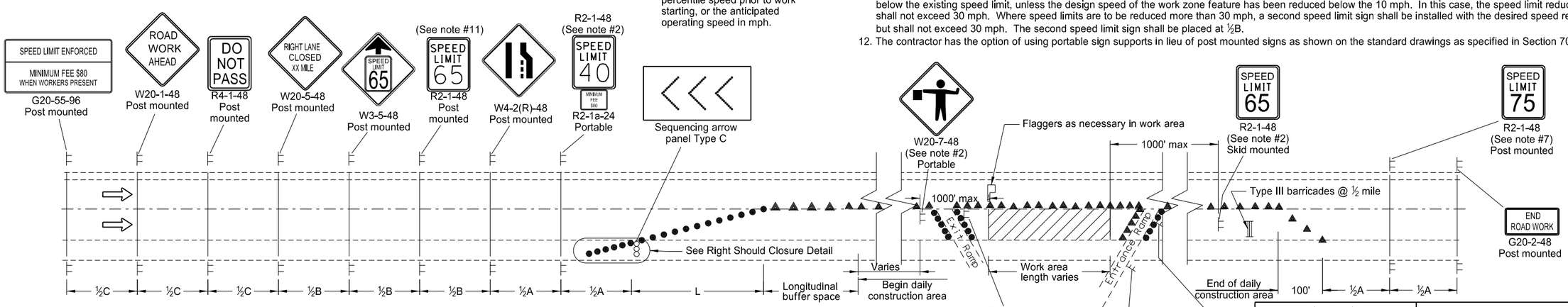

RIGHT LANE CLOSED
WORKERS IN WORK AREA

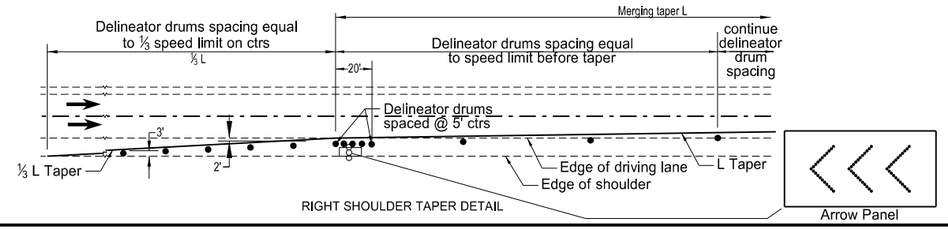

RIGHT SHOULDER TAPER DETAIL

NORTH DAKOTA DEPARTMENT OF TRANSPORTATION	
9-7-2012	
REVISIONS	
DATE	CHANGE

This document was originally issued and sealed by Roger Weigel, Registration Number PE- 2930, on 9/7/12 and the original document is stored at the North Dakota Department of Transportation

PORTABLE SIGN SUPPORT ASSEMBLY

D-704-50

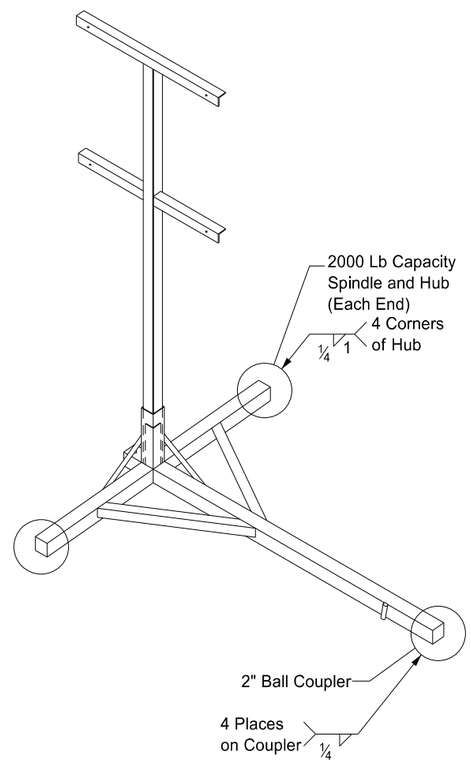

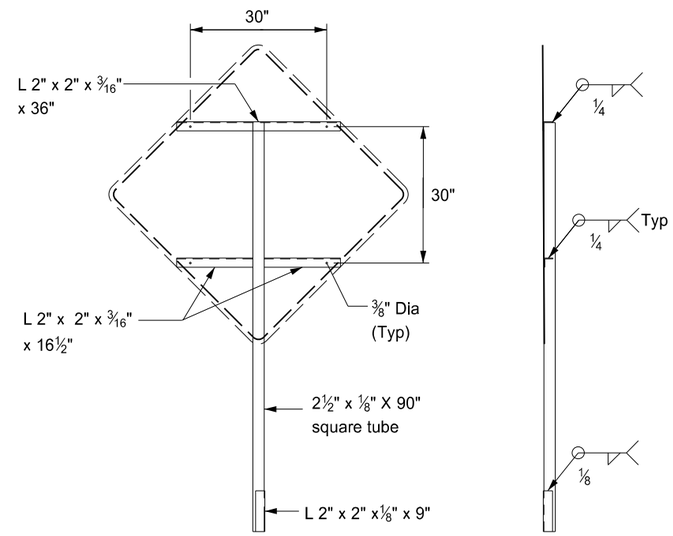

FRONT

RIGHT

SIGN SUPPORT

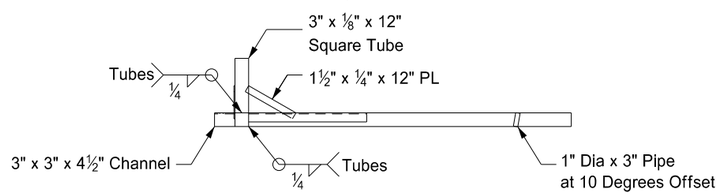

FRONT

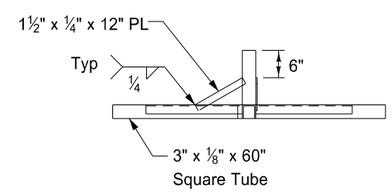

RIGHT

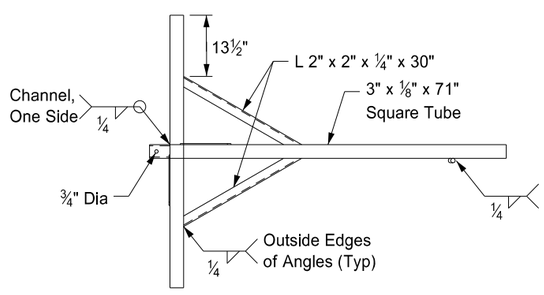

TOP

TRAILER

Notes:

1. The maximum weight of the assembly is 250 pounds.
2. Use a 14" wheel and tire.
3. Automotive and equipment axle assemblies may not be used for trailer-mounted sign supports.
4. Other NCHRP 350 crash tested assemblies are acceptable.

NORTH DAKOTA DEPARTMENT OF TRANSPORTATION	
11-23-10	
REVISIONS	
DATE	CHANGE

This document was originally issued and sealed by Roger Weigel Registration Number PE- 2930 , on 11/23/10 and the original document is stored at the North Dakota Department of Transportation

INTERSTATE PAVEMENT MARKING
4 LANE DIVIDED HIGHWAY

D-762-2

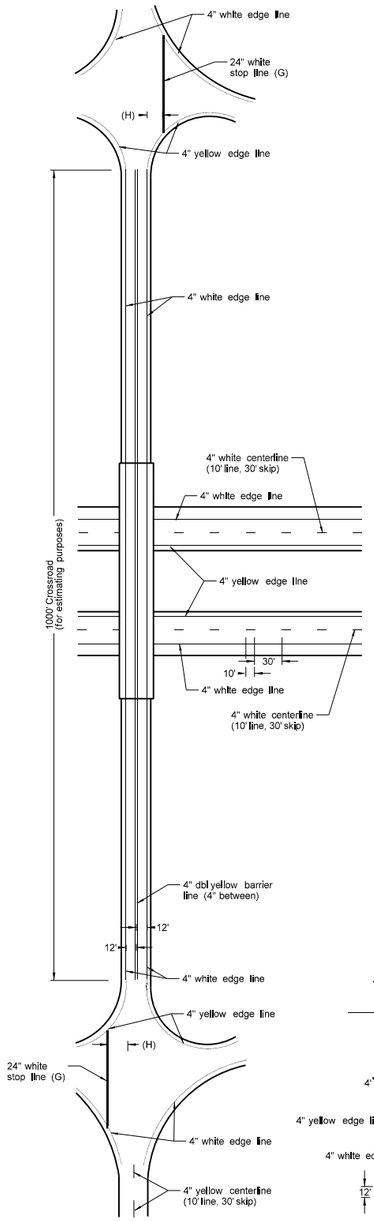

CROSS-ROAD & STRUCTURE
The engineer in the field shall determine the length to be striped.

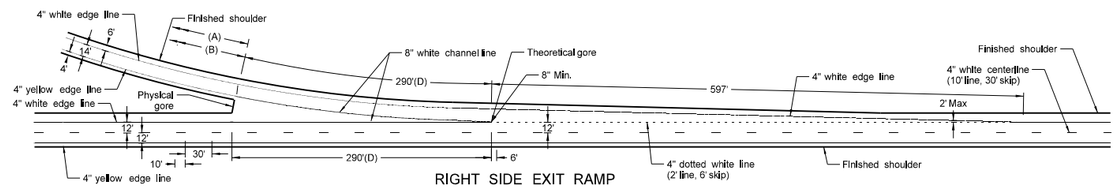

RIGHT SIDE EXIT RAMP
TAPERED DECELERATION LANE

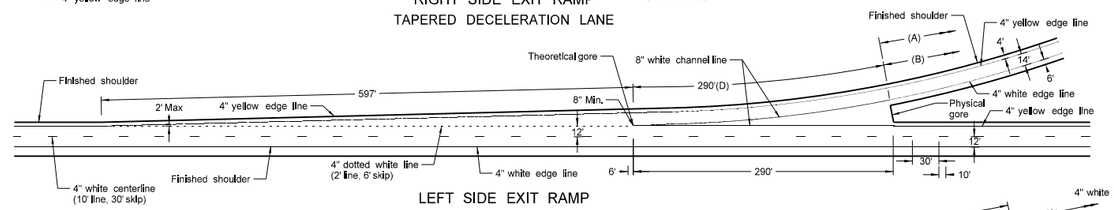

LEFT SIDE EXIT RAMP
TAPERED DECELERATION LANE

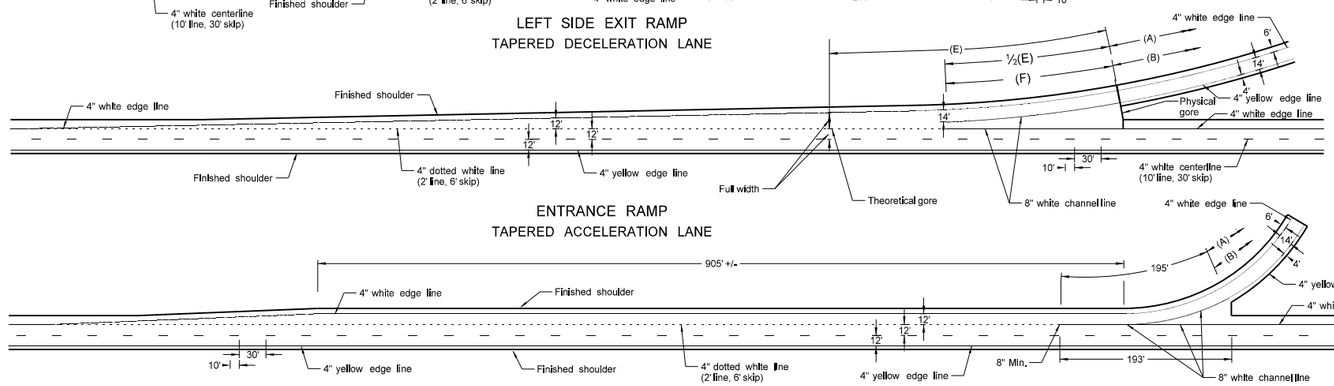

ENTRANCE RAMP
TAPERED ACCELERATION LANE

ENTRANCE RAMP
PARALLEL ACCELERATION LANE

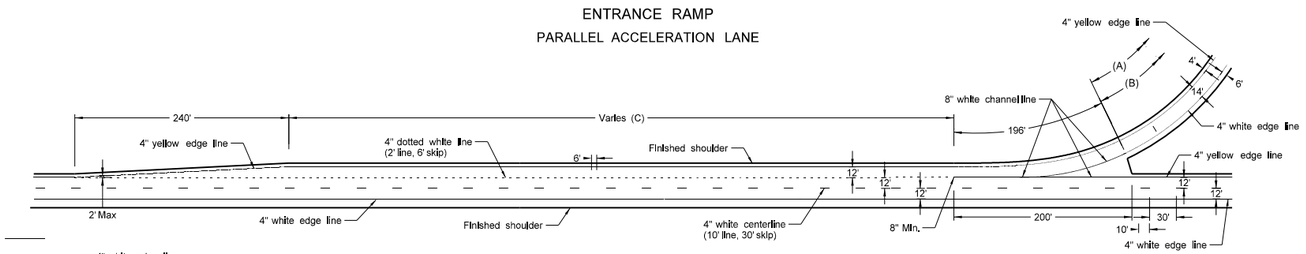

LEFT SIDE EXIT RAMP
PARALLEL DECELERATION LANE

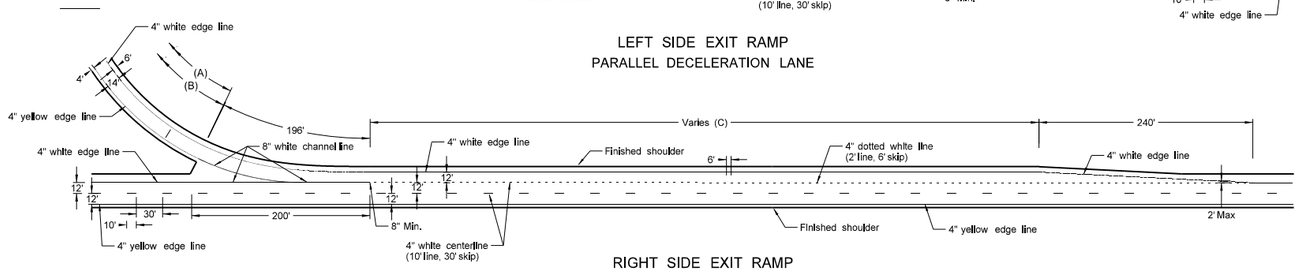

RIGHT SIDE EXIT RAMP
PARALLEL DECELERATION LANE

NOTE:

(A) 4" White edge line
(B) 4" Yellow edge line
(C) Assume "varies" to equal 790' for purpose of estimate. The pavement marking shall begin at the beginning of the taper and end at the 8" line.
(D) Beginning of physical gore to theoretical gore.
(E) If the distace is less than 350' then extend the 8" channel line to the theoretical gore, otherwise use 195'.
(F) 195' was used for estimating purposes.
(G) Not required when crossroad approaches have gravel surface.
(H) 4' minimum, 15' maximum from the nearest edge of the Intersection traveled way.

BASIS OF ESTIMATE

LOCATION	ITEM	
Right or Left Side Exit Ramp TAPERED	8" White channel line	580 LF
	24" White stop line	60 LF
	4" White dotted line	148 LF
	4" White edge line	1115 LF
	4" Yellow edge line	1075 LF
Entrance Ramp TAPERED	8" White channel line	390 LF
	4" White dotted line	258 LF
	4" White edge line	1270 LF
	4" Yellow edge line	1075 LF
Right or Left Side Exit Ramp PARALLEL	8" White channel line	396 LF
	24" White stop line	60 LF
	4" White dotted line (C)	258 LF
	4" White edge line	1115 LF
	4" Yellow edge line	1075 LF
Entrance Ramp PARALLEL	8" White channel line	388 LF
	4" White dotted line	283 LF
	4" White edge line	1275 LF
	4" Yellow edge line	1075 LF
Main Line (Both Roadways)	4" White lane line, 10' line, 30' skip	2640 LF/MI
	4" White edge line	10,560 LF/MI
	4" Yellow edge line	10,560 LF/MI
Cross Road	4" White edge line	2000 LF
	4" Dbl yellow barrier line (4" between)	2000 LF

NORTH DAKOTA
DEPARTMENT OF TRANSPORTATION

8-3-11

REVISIONS

DATE	CHANGE

This document was originally issued and sealed by Roger Weigel, Registration Number PE- 2930, on 08/03/11 and the original document is stored at the North Dakota Department of Transportation

PAVEMENT MARKING

D-762-4

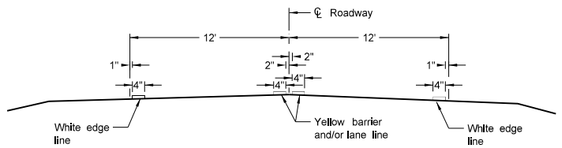

Two Lane Two Way
RURAL ROADWAY

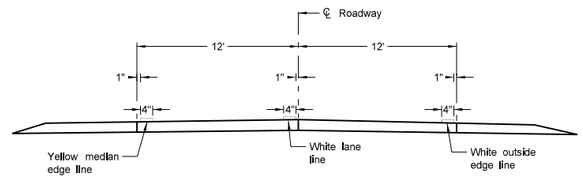

Two Lane Roadway
INTERSTATE HIGHWAY
Concrete Section

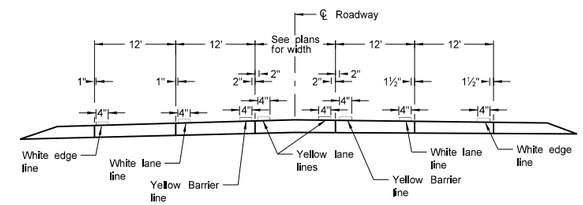

RURAL FIVE LANE ROADWAY
Concrete Section

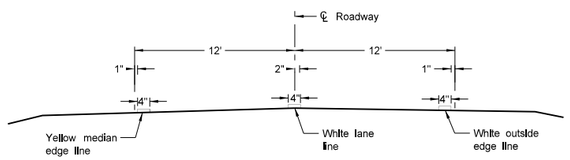

Two Lane Divided
Rural Roadway
PRIMARY HIGHWAY
Asphalt Section

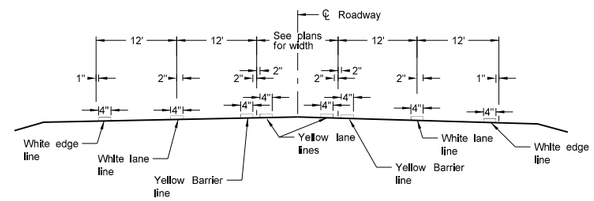

RURAL FIVE LANE ROADWAY
Asphalt Section

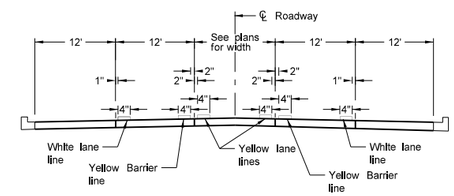

URBAN FIVE LANE SECTION
Concrete Section

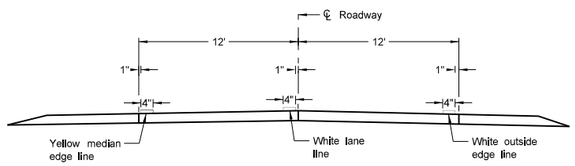

Two Lane Roadway
PRIMARY HIGHWAY
Concrete Section

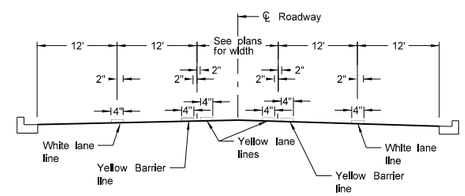

URBAN FIVE LANE SECTION
Asphalt Section

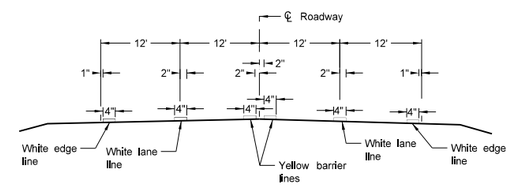

RURAL FOUR LANE ROADWAY
Asphalt Section

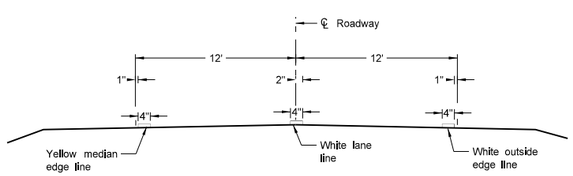

Two Lane Roadway
INTERSTATE HIGHWAY
Asphalt Section

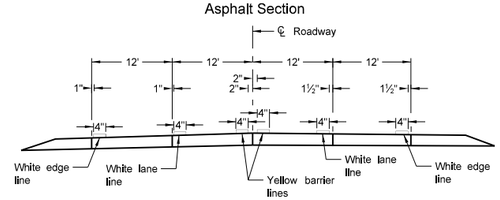

RURAL FOUR LANE ROADWAY
Concrete Section

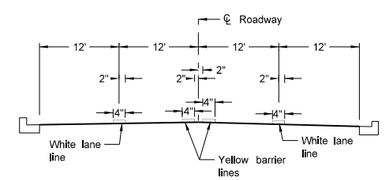

URBAN FOUR LANE SECTION
Asphalt Section

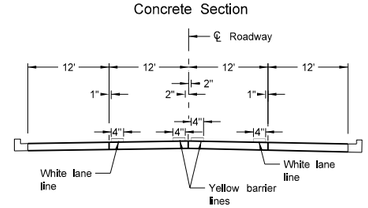

URBAN FOUR LANE SECTION
Concrete Section

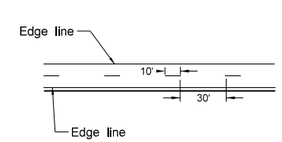

CENTERLINE PAVEMENT MARKING SKIP SPACING DETAIL

NOTES:

1. Edge lines shall be continued through private drives and field drives and broken for intersections.

NORTH DAKOTA DEPARTMENT OF TRANSPORTATION	
12-1-10	
REVISIONS	
DATE	CHANGE

This document was originally issued and sealed by Roger Weigel, Registration Number PE- 2930, on 12-1-10 and the original document is stored at the North Dakota Department of Transportation